BSES YAMUNA POWER LIMITED (BYPL)

Notice Inviting Tender (NIT)

for

"Turnkey project for Conversion of overhead electrical network into underground Utility system at two locations (Esplanade & More Sarai road) at Chandani chowk, Delhi"

NIT No.: CMC/BY/26-27/RS/PM/VK/5

Dated: 27.04.2026

[RFx No: 2200000206]

Due Date for Submission of Tender: 04.05.2026, 14:00 HRS

Date and Time of opening: 04.05.2026, 15:00 HRS

BSES YAMUNA POWER LIMITED,
Shakti Kiran Building, Karkardooma, New Delhi – 110032
Corporate Identification Number: U40109DL2001PLC111525
Website: www.bsesdelhi.com

BYPL

(This document is meant for the exclusive purpose of bidding against this NIT Number /Specification and shall not be transferred, reproduced, or otherwise used for purposes other than that for which it is specifically issued).

BYPL

BSES Yamuna Power Limited

CONTENTS

S. No.	ITEM	DESCRIPTION
1	**CHECK LIST**	CHECK LIST FOR BID SUBMISSION
2	**SECTIONS**	
2.1	SECTION-I	REQUEST FOR QUOTATION (RFQ)
2.2	SECTION-II	INSTRUCTION TO BIDDERS (ITB)
2.3	SECTION-III	SPECIAL TERMS & CONDITIONS (SCC)
2.4	SECTION-IV	GENERAL TERMS & CONDITIONS (GCC)
2.5	SECTION-V	SCOPE OF WORK
2.5	SECTION-VI	PRICE BID
3	**ANNEXURES**	
3.1	ANNEXURE-I	BID FORM
3.2	ANNEXURE-II	BIDDER'S DETAILS
3.3	ANNEXURE-III	SAFETY CONDITIONS OF CONTRACT
3.4	ANNEXURE-IV	ACCEPTANCE OF REVERSE AUCTION
3.5	ANNEXURE-V	MEASURES RELATED TO THE TREE PRUNING, EXCAVATION NEAR TREE AND CONSTRUCTION & DEMOLITION
4	**FORMATS**	
4.1	EMD	EARNEST MONEY DEPOSIT (EMD) BANK GUARANTEE
4.2	CPBG	CONTRACT CUM PERFORMANCE BANK GUARANTEE (CPBG)
4.3	NDA	NON-DISCLOSURE AGREEMENT (NDA)
4.4	NDD	NO DEVIATION DECLARATION (NDD)
4.5	COMMUNICATIO N	BIDDER'S COMMUNICATION DETAILS
4.6	WORK COMPLETION CERTIFICATE	FORMAT FOR WORK COMPLETION CERTIFICATE

BYPL

BSES Yamuna Power Limited

INDEX

SECTION- I	7
REQUEST FOR QUOTATION (RFQ)	7
1. GENERAL	7
2. POINTS TO BE NOTED	8
3. EMD	8
4. QUALIFYING REQUIREMENTS (QR)	9
1. QUALIFYING REQUIREMENTS (QR):	9
2. PRE-BID MEETING: Deleted	13
3. BID SUBMISSION	13
4. TIME SCHEDULE	16
5. AWARD DECISION	16
9. MARKET INTEGRITY	17
10. CONFIDENTIALITY	17
11. CONTACT INFORMATION	17
INSTRUCTIONS TO BIDDERS (ITB)	1
SECTION – III	10
SPECIAL TERMS & CONDITIONS (SCC)	10
GENERAL TERMS & CONDITIONS(GCC)	1
SECTION – V	34
Scope of Work (Attached Separately)	34
SECTION – VI	1
PRICE BID	1
ANNEXURE – I: BID FORM	2
ANNEXURE – II	3
BIDDER'S DETAILS	3

BYPL

BSES Yamuna Power Limited

CHECK LIST

(FOR BID SUBMISSION)

S. No	Item Description	Yes/No
1	BID INDEX	
2	COVERING LETTER	
3	TENDER FEE	
4	EARNEST MONEY DEPOSIT	
5	POWER OF ATTORNEY	
6	BID FORM DULY SIGNED	
7	NON-DISCLOSURE AGREEMENT (NDA)	
8	NO DEVIATION DECLARATION (NDD)	
9	UNPRICED TECHNO-COMMERCIAL BID	
10	PRICE BID	

BYPL

BYPL

SECTION- I

REQUEST FOR QUOTATION (RFQ)

BSES Yamuna Power Limited

SECTION- I
REQUEST FOR QUOTATION (RFQ)

1. GENERAL

BSES Yamuna Power Limited invites tenders on a "Single Stage: Two Parts" bidding basis i.e. Techno-Commercial Bid & Price Bid on its E-Tendering portal (https://srmprdportal.bsesdelhi.com/irj/portal) from eligible Bidders for award of contract for "Turnkey project for Conversion of overhead electrical network into underground Utility system at two locations (Esplanade & More Sarai road) at Chandani chowk, Delhi".

1.1. The bidder must qualify the requirements as specified in heading "Qualifying Requirements" of this RFQ.

1.2. The sealed envelopes shall be duly super-scribed as:

"NIT No.: CMC/BY/26-27/RS/PM/VK/5 Dated: 27.04.2026"
"RFx: 2200000206"

For

"Turnkey project for Conversion of overhead electrical network into underground Utility system at two locations (Esplanade & More sarai road) at Chandani chowk, Delhi"

1.3. Schedule of the tendering process is given below.Detailed Specification, Scope of Work, Terms & Conditions, etc are mentioned in the Tender documents, which is also available on our website.

RFx Number (Request for Quotation / Proposal Number)	2200000206
Cost of Tender Documents (Non- Refundable)	₹1,180/- (including GST)
Earnest money Deposit (EMD)	₹ 25 Lakh
Duration of the Work	2 Months
Tender documents on sale	27/04/2026 to 04/05/2026 (Working days)
Date & time of Submission of Bid	04/05/2026, 14:00 HRS
Date & time of opening of Techno-Commercial Bid	04/05/2026, 15:00 HRS

1.4. The tender document can be obtained from the address given below against submission of a non-refundable demand draft of Rs. 1180/- drawn in favour of BSES Yamuna Power Ltd, payable at Delhi or Online transfer of the requisite amount through IMPS/ NEFT/ RTGS. The tender document is also available for download from the website www.bsesdelhi.com--> BSES YAMUNA POWER LTD --> Tender --> Open Tenders:

Head of Department,
Contracts & Material Department,
BSES Yamuna Power Limited,
III Floor, "A" Block, Shakti Kiran Building,
Karkardooma,
New Delhi-110032.

In case the tender is downloaded from the above website, then the bidder has to enclose a demand draft or online transfer of the requisite amount through IMPS/ NEFT/ RTGS covering the cost of bid documents.

1.5. DD shall be accepted for tender fees or Online transfer of the requisite amount through IMPS/ NEFT/ RTGS.

1.6. The tender documents will be issued on all working days up to the date mentioned in clause 1.3. The tender documents & detail terms and conditions can also be downloaded from the website www.bsesdelhi.com. In case tender documents are downloaded from the above website, then the bidder has to enclose a separate demand draft covering the cost of bid documents.

2. POINTS TO BE NOTED

1.1. Works envisaged under this contract are required to be executed in all respects up to the period of completion/ duration of work mentioned above.
1.2. Only those agencies, who fulfil the qualifying criteria as mentioned in clause 4 should submit the tender documents.
1.3. BSES YAMUNA Power Ltd reserves the right to accept/reject any or all bids without assigning any reason thereof and alter/amend/modify/add/reduce the amount and quantity mentioned in the tender documents at the time of placing Order
1.4. The bid will be summarily rejected if:
(a) **Earnest Money Deposit (EMD)**and **Tender Fee** of requisite amount is not deposited as per tender conditions.
(b) Bid received after due date and time.

3. EMD

2.1. The bidder shall furnish, as part of its bid, an EMD of the requisite amount. The EMD is required to protect the Company against the risk of Bidder's conduct which would warrant forfeiture. The EMD shall be denominated in any of the following forms:

a) BG from nationalized / Scheduled Bank, as per the format annexed in the tender document, in favour of BSES Yamuna Power Limited valid for Six(06) months from the original due date of bid submission (with 7 days variation acceptable).

b) Fixed Deposit (lien marked in favour of BSES YAMUNA POWER LTD) valid for Six (06) months from the original due date of bid submission.

2.2. Please note that bank details as given below have been provided only for the purpose of making BG for EMD.

Beneficiary Name	: BSES Yamuna Power Limited
Bank Name	: State Bank of India (SBI)
A/c No.	: 10277791808
IFSC Code	: SBIN0009601

2.3. The EMD of the bidders who are not technically qualified shall be returned after the price bid opening.

2.4. Earnest money given by all the bidders who are techno-commercially qualified except the lower bidder shall be returned within 08 (Eight) weeks after award of the work.

2.5. The EMD of the successful bidder shall be returned on submission of CPBG as per tender terms.

2.6. The EMD may be forfeited in case of:

(a) The Bidder withdraws its bid during the period of bid validity specified by the Bidder in the Bid Format
(b) The successful Bidder does not
(i) accept the Purchase Order/Work Order, or
(ii) furnish the required CPBG as per tender terms

(c) The bidder is found to have submitted false or forged, any of the documents/certificates/information.

4. QUALIFYING REQUIREMENTS (QR)

The prospective bidder must meet all of the following qualifying requirements to be eligible to participate in the bidding.

QUALIFYING REQUIREMENTS (QR):

4.1. The Bidder may be a single entity or joint venture(JV) or a group of entities (the "Consortium"), coming together to implement the Project of maximum three members, shall be considered as sole bidder. However, no Bidder applying individually or as a member of a Consortium, as the case may be, can be member of another Bidder. The term Bidder used herein would apply to single entity, JV and Consortium.

The Bidder may seek qualification on the basis of technical and financial capability of its Parent / Affiliate (s) /Associate for the purpose of meeting the qualification requirements. Authorization for use of such technical or financial capability shall have to be provided from its Parent / Affiliate (s) /Associate. The technical and financial capability of a particular entity, including its Parent / Affiliate (s) /Associate, shall not be used by more than one Bidder. Parent / Affiliate (s) /Associate can be a company incorporated in India or outside India.

"Associate" means, in relation to the Bidder/Consortium Member, a person who controls, is controlled by, or is under the common control with such Bidder/Consortium Member (the "Associate"). As used in this definition, the expression "control" means, with respect to a person which is a company or corporation, the ownership, directly or indirectly, of more than 50% (fifty percent) of the voting shares

of such person, and with respect to a person which is not a company or corporation, the power to direct the management and policies of such person by operation of law.

"Affiliate (s)" means, in relation to any Person, any entity Controlled, directly or indirectly by that Person, any entity that Controls, directly or indirectly, that Person, or any entity under common Control with that Person or, in case of a natural Person, any relative of such Person. A holding or subsidiary company of any entity shall be deemed to be an Affiliate of that entity. The Affiliate shall also include a Parent Company and an Ultimate Parent Company.

"**Parent company**" means, an entity shall mean an entity that holds at least twenty six percent (26%) of the paid up equity capital directly or indirectly in the Bidder and has the power to direct the management and policies by operation of law or contract.

A. DEFINITION OF JOINT VENTURE:

"The expression 'joint venture' connotes a legal entity in the nature of a partnership engaged in the joint undertaking of a particular transaction for mutual profit or an association of persons or companies jointly undertaking some commercial enterprise wherein all contribute assets and share risks."

It can be seen that a joint venture is a partnership between two or more persons to take up a common enterprise. The 'joint venture' involves viz., (1) contribution by the parties of money, effort, knowledge and other assets to common undertaking; (2) joint property interests in the subject matter of the venture; (3) right of mutual control of management of the enterprise; (4) Role in Execution of the Project; and (5) Share in Profits. These aspects would be agreed to among the Joint Venture Partners.

B. DEFINITION OF CONSORTIUM:

A consortium is formed by an agreement or MoU, which delineates the rights and obligations of each member. A consortium is defined as a group of companies participating for mutual benefit. Companies in a consortium co-operate with one another, often sharing resources as needed. A consortium allows the companies to conduct operations that they would not be able to do individually. It is important to note, however, that a consortium is not a merger and the companies remain independent.

C. **Guidelines for participation of Joint venture/ consortium firms**

a) Number of members shall not be more than three (03).

b) In case of Consortium/Joint Venture, in meeting the requirement of Technical Criteria, the experience of each of the members of Consortium/Joint Venture shall be added.

c) In case of Consortium/Joint Venture, in meeting the requirement of Financial Criteria, the financial capacity of each of the members of Consortium/ Joint Venture shall be added together to arrive at the combined eligibility of the Consortium/Joint Venture to determine the bidder's compliance.

d) The Consortium / Joint Venture shall necessarily identify one of the Member(s)/ Partner(s) as Lead Member/Lead Partner, who shall meet on its own at least 51% of the Financial criteria. Each Member/ Partner of Consortium / Joint Venture shall meet not less than 20% of the Financial Criteria.

e) The Lead member/ Lead partner should have executed at least one similar nature of projects as stipulated in the technical criteria mentioned under Clause No. 1.10.1.

f) Change in composition of Consortium/Joint Venture is not permitted after submission of bids.

g) The validity of Joint Venture/ consortium shall be till completion of the Defect liability period (DLP).

4.2. If at any stage of the bidding, any order/ ruling is found to have been passed in the last 1 (one) year preceding the bid submission deadline by a competent Court of Law or any appropriate commission or any arbitral tribunal against the Sole Bidder/ Lead Member / any Consortium Members or its Affiliates for breach of any contract awarded by any government agency/department/ Utility, then Bids from such Bidders shall be liable to be rejected.

4.3. An individual Bidder cannot at the same time be member of a Consortium applying RFP. Further, a member of a particular Bidder Consortium cannot be member of any other Bidder Consortium applying for RFP.

4.4. No Bidder shall submit more than one Bid for the Project. A Bidder bidding individually or as a member of a Consortium shall not be entitled to submit another BID either individually or as a member of any Consortium, as the case may be.

4.5. Techno-commercially qualified Bidders shall continue to maintain compliance with the eligibility and qualification requirements specified herein during the bidding process. Failure to comply with the aforesaid requirements shall make the Bid from such Bidders liable for rejection at any stage of the bidding process.

4.6. The Bidder, participating in the bid as a Sole Bidder, as JV/ Consortium Member or as Lead Member, and its sub-contractor(s) should not be blacklisted/debarred/ banned/ suspended as on date of bid submission:

a) due to conviction of an offence
   (i) under the Prevention of Corruption Act, 1988; or,
   (ii) Bhartiya Nyaya Sanhita or any other law for the time being in force, for causing any loss of life or property or causing threat to public health as part of execution of a public procurement contract
b) through any order/ list issued by Department of Expenditure (DoE), Ministry of Finance (MoF)
c) due to breach of code of integrity as per Rule 175 of General Financial Rules, 2017 ("**GFRs**") in any govt. organization or regulatory agencies or govt. undertaking by any ministry/ department/ organization under any state govt. in India.

This Clause shall be interpreted in-line with Rule 151 of GFRs along with any guidelines/ amendment issued by DoE, MoF.

4.7. **Technical QR:**

4.7.1. Bidder must be an experienced civil contractor with a minimum five (5) years (FY22 to FY26) of experience in the execution of similar nature of work contracts. The bidder must have executed a single order of a minimum value of Rs 21 Crore or two orders of minimum value Rs. 13 Crore each or three orders of minimum value of Rs 10.5 Crore each for similar nature of works in any public utility/ government organization/other reputed organization in the last five financial years (FY22 to FY26). The Bidder has to submit the list of projects already executed and under execution along with bid documents.

In case the bidder has had a previous association with BRPL/BYPL for similar works or services, only the performance feedback provided by BRPL/BYPL shall be considered, irrespective of any performance certificates issued by other organizations.

"Similar Nature of Work" shall mean execution of civil works related to construction of roads including construction of utility ducts and shifting of utilities, including diversion and

reinstatement of utilities (such as electrical cables, street lighting infrastructure, water supply, sewerage, telecom, etc.), carried out as part of road, metro, railway, or airport projects.

4.7.2. The bidder should have the requisite skills, knowledge, expertise, experience, and system as per the requirement of the company and the capability to act as a civil contractor with the trained and experienced person with the requisite skill and knowledge to perform the function. The bidder shall submit a detailed organization chart along with the qualification & experience of their key persons along with its bid.

4.7.3. The Bidder shall submit a list of Tools & Plants (T&P) owned by them. In case the available T&P are inadequate to meet the requirements of the work under this tender, the Bidder shall also furnish details of the proposed alternative arrangements. An undertaking in this regard shall be submitted by the Bidder along with the bid.

The bidder shall submit all necessary documentary evidence to establish that they meet the above qualifying requirements.

4.8. **Financial QR:**

4.8.1. The average annual turnover of the Bidder, in the preceding three (3) financial years (i.e., FY2024-25, FY2023-24 & FY2022-23) should not be less than Rs. 350 Crore. The Bidder / each JV& Consortium Member shall submit annual turnover certificate duly certified by a Chartered Accountant. The Turnover certificate must have UDIN Number.

4.8.2. The bidder should have a net worth of at least Rs. 5 Crore as of the last day of the financial year FY2024-25. The Bidder / each JV& Consortium Member shall submit Net worth certificate duly certified by a Chartered Accountant. The Turnover certificate must have UDIN Number.

4.8.3. Bidder must provide proof of having solvency of an amount equal to Rs. 7.5 Crore from any nationalized/ scheduled commercial bank. It should not be older than three (03) month of publication of this tender document. In case of consortium, only lead member's Solvency will be considered.

4.8.4. Bidder should have valid Registration of GSTIN & PAN.

4.8.5. Bidder should fulfil all statutory compliances like PF, ESI registration, etc.

4.8.6. Entities that are currently debarred or blacklisted or suspended by BYPL or its group companies, Central or State government institution, including electricity boards in India, or any DISCOM in India will not be eligible to participate in this tender and their bid will not be considered for further evaluation. As part of the submission, the bidder must provide an undertaking on their official letterhead, signed by an authorized person, confirming that the bidder is not debarred or blacklisted as of the bid submission date.

4.8.7. The bidder should give an undertaking by the Authorized Person on their letterhead that all the documents/certificates/information submitted by them against the tender are genuine/true/correct and the copies of documents have been made from the original document/s. Further, in case any of the documents/certificates/information submitted by the bidder is found to be false or forged, BYPL at its sole discretion shall be free to take all actions as permitted under law, including forfeiture of EMD and disqualification from participation in the future tenders of BYPL & Its group companies for indefinite period or period as may be decided by BYPL.

4.8.8. The bidder should submit an undertaking for "No Litigation" / no legal case is pending with BYPL or its Group Companies. Bidders having any litigation/ legal case pending with BYPL shall not be considered qualified for this tender.

4.9. **Other Requirements:**

(a) Company reserves the right to carry out technical capability/ infrastructure assessment of the Bidders by factory/office/site inspection or by any other means and company's decision shall be final in this regard.

(b) The bidder shall submit all necessary documentary evidence to establish that the Bidder meets the above qualifying requirements including but not limited to following:

i. Last three Financial Years (FY 2022-23, FY 2023-24, & FY2024-25) audited financial statement.
ii. Bidder to submit UDIN based CA Certificate showing NIL dues towards Statutory Liabilities, including GST, Taxation, PF, ESI, or any other dues Statutory in nature for the period up to 31.03.2026, herein collectively called as "Statutory dues" and there is no liability over the bidder relating to the deposition of such statutory dues.
iii. Details of formation/registration of the firm (Proprietary/ Partnership) or Company along with all relevant details)
iv. Memorandum & Articles of Association of the Company/ Partnership Deed of the Firm /other registration documents, as applicable
v. Organization chart for execution of the contract comprising of Technically Qualified manager, Safety officer as per CEA guidelines, HR manager, Diploma / Graduate Engineers etc.
vi. Organization Chart of the Bidders Company/organization.
vii. Number of Employees & necessary details
viii. Details of office/s in Delhi/NCR, Details of Registered and Corporate offices and details of other offices/establishments in India.
ix. Turnover certificate issued by CA (along with UDIN no.) for the last three Financial Years.
x. Networth certificate as elaborated in financial QR
xi. List of pending litigation with government/other institutions on account of executing any order.
xii. Copy of ESI/PF Registration certificate
xiii. Copy of PAN/GST no.
xiv. Copy of Final GST Return of last Financial Year.
xv. Non-Disclosure Agreement (NDA) as per format attached
xvi. Solvency Certificate
xvii. An undertaking to provide all Tools& Plants, Safety Kits, PPEs Gadgets etc. as per tender scope.

(c) BYPL may ask for such other documents as it deems fit for substantiating/ justifying the submissions made by the bidder.

5. PRE-BID MEETING: Deleted

6. BID SUBMISSION

6.1 **The bids are invited through BYPL's E-Tendering portal.** BSES will carry out E-Tendering on its e-tendering portal https://srmprdportal.bsesdelhi.com/irj/portal

6.2 **Interested** Non- registered bidders are requested to obtain the portal user name and password (if not available) for bid submission. To participate in the e-Tendering process of BYPL, please write a mail to the following persons mentioning your details:

A**) Contact Person-**

1. Mr Rakesh Sharma, E-mail: Rakesh.Ku.Sharma@reliancegroupindia.com,
2. Mr Vimal Kumar, E-mail: Vimal.R.Kumar@reliancegroupindia.com,

B) Bidder's Details-

a) Existing Vendor Code with BYPL or its Group/Associates Companies (if available): …….
b) Trade Name: …….
c) Address of Principal Place of Business: …….
d) Contact Person's Name: …….
e) Contact Person's Designation: …….
f) Contact Person's Mobile No.: …….
g) Contact Person's email ID: …….
h) Power of Attorney (POA) in favour of the mentioned Contact Person for being authorized to receive user ID and password on behalf of their organization. (Attach a copy of POA)

The login ID details shall be sent through email to the email ID mentioned by you for the same.

Bids shall be submitted in 2 (Two) parts on the assigned folder of the E-Tendering site. Please refer to the user manual available at https://srmprdportal.bsesdelhi.com/irj/portal and enclosed with the tender.

Bids have to be mandatorily submitted only through the e-procurement portal of BSES Delhi. Bids submitted through any other form/ route shall not be admissible.

However, documents that necessarily have to be submitted in originals like EMD or Tender Fee (in the form of BG/ DD as applicable) and/or any other documents mentioned in the tender, submission of which are required in original/hardcopy, have to be submitted at the BYPL office before the due date & time of submission.

For submission of such documents, please mention our NIT Number and RFx number on the sealed envelop and drop the same in our Tender Box placed at BSES Yamuna Power Ltd, Reception, Ground Floor, Shaktikiran Building, Karkardooma, Delhi 110032.

The sealed envelope shall be addressed to:

Head of Department,
Contracts & Material Department,
BSES Yamuna Power Limited,
III Floor, "A" Block, Shakti Kiran Building,
Karkardooma,
New Delhi-110032.

Kindly Note:

- The bidder has to ensure that the sealed envelope is dropped in the correct box designated for bid submission only.
- BYPL shall not be responsible for any wrong placement of sealed envelopes by the bidder.

6.1.1. PART A: TECHNO- COMMERCIAL BID comprising of the following documents:

Sr. No	Descriptions	Type of Documents
1	**Tender Fee - Demand Draft (Rs.1180/-) (Incl GST)**	Non-refundable demand draft or online transfer of the requisite amount through IMPS/ NEFT/ RTGS for Rs 1180/- in case the forms are downloaded from the website
2	**EMD**	In the prescribed stamp paper & format enclosed at Formats: Format 4.1
3	**Power-of-Attorney**	In the standard stamp paper & format
4	**Cover Letter**	Standard Format
5	**Technical Bid Submission Check List**	Checklist given in the index
6	**PQR Compliances**	Documentary evidence in support of qualifying criteria mentioned in Section 1 Clause 4.0
7	**Signed Tender document**	Original Tender documents duly stamped & signed on each page as a token of acceptance
8	**Bid Form (Unpriced) Duly Signed**	Duly Signed Bid Form as per enclosed format at ANNEXURE – 1.
9	**Acceptance of Reverse Auction**	Duly signed Acceptance Form For Participation In Reverse Auction Event as per enclosed format at ANNEXURE – 3
10	**Undertakings**	Duly signed self-undertakings as per clause 4 at Section 1
11	**Schedule of Deviations**	Duly filled and signed as per enclosed format at Formats Format 4.4
12	**Communication Matrix**	Duly filled and signed as per enclosed format at Format 4.5
13	**Un price Bid Duly Signed**	Duly Signed Un price Bid as per enclosed format at Section VI - PRICE BID FORMAT
14	**Organization Chart & Manpower Details.**	Bidder shall submit the details of Organization & Manpower with qualification and experience.

6.1.2 PART B: PRICE BID :

(a) **PRICE BID** shall be comprised of Prices **strictly** in the Format enclosed in SECTION VI. Any change in price bid format, or content may lead to rejection of the bid.

(b) Price Bid will be opened after techno-commercial evaluation of all the bids and only of the qualified bidders.

6.1.3 FINANCIAL BID EVALUATION THROUGH REVERSE AUCTION:

The company reserves the right to conduct Reverse Auction (RA) for finalization of contract hence the details of the price bid shall not be shared with bidders. The qualified bidders will participate in reverse auction through SAP-SRM tool. The RA process shall

be governed by the terms and conditions enclosed as Annexure-IV in this tender document. Training/details shall be provided to bidders before participation in auction. In case RA is not conducted /concluded for any reasons, a "final no regret" financial bid in a sealed envelope will be called for from all qualified bidders. Notwithstanding anything stated above, the Company reserves the right to assess bidders' capability to perform the contract, should the circumstances warrant such assessment in the overall interest of the Company. In this regard, the decision of the Company shall be final and binding on the bidders.

7. TIME SCHEDULE

The activities and their timelines are given hereunder which needs to be adhered by the bidders.

S. No.	Activity	Description	Due date
1	Submission of Technical& Commercial Queries, if any	All Queries related to NIT	04/05/2026
2	Submission of Techno-Commercial & Price Bid	Unpriced Techno-Commercial & Price Bid on e-Tendering platform	04/05/2026 **till 1400 HRS**
3	Opening of Techno-Commercial Bid	➢ Online opening of PART-A (Techno-Commercial Bid) Offline opening of the envelope containing EMD, Tender Fee, POA or any other documents.	04/05/2026 **at 1500 HRS**
4	Opening of Price Bid	➢ Online Opening of PART-B (Price Bid) of only the techno-commercially qualified bidders (List of qualified bidders will be published on our website)	To be informed separately
5	Reverse Auction (RA)	RA is Mandatory.	Schedule will be intimated to eligible bidders through email from email id: bypl.eauction@reliancegroupindia.com

8. AWARD DECISION

8.1 Company intends to award the business on a lowest bid basis, so bidders are encouraged to submit the bid competitively. The decision to place order/LOI solely depends on Company on the cost competitiveness across multiple lots, quality, delivery and bidder 's capacity, in addition to other factors that Company may deem relevant.

8.2 The Company reserves all the rights to award the contract to one or more bidders who meet the execution requirement or nullify the award decision without assigning any reason thereof.

8.3 In case the performance of any contractor is found unsatisfactory during the execution process, the award will be cancelled and BYPL reserves the right to award the work to another contractor(s) who will be found eligible/fit.

8.4 The abnormally higher or abnormally lower bids shall not be considered with respect to estimated cost. The criteria decided by BYPL on this shall be final and binding on the bidders.

8.5 The bidding firms are advised to quote their Margin / Administrative Service Charges accordingly, BYPL reserves the right to reject the bids quoted with abnormally higher or abnormally lower individual activity rates. The criteria decided by BYPL on this shall be final and binding on the bidders and will not be open for discussion under any circumstances.

9. MARKET INTEGRITY

We have a fair and competitive marketplace. The rules for the bidders are outlined in the Terms & Conditions of the tender documents. Bidders must agree to these rules prior to participating in the tender. In addition to other remedies available, we reserve the right to exclude a bidder from participating in future markets due to the bidder's violation of any of the rules or obligations contained in the Terms & Conditions. Bidder(s) who violate the marketplace rules or engage in behaviour that disrupts the fair execution of the marketplace restricts a bidder from participation in future tenders of BYPL to a length of time as decided by BYPL, depending upon the seriousness of the violation. Examples of violations include, but are not limited to:

- Failure to honour prices submitted to the market place.
- Breach of the terms published in Request for Quotation/NIT
- Misrepresentation of facts, submitting false and fabricating documents

10. CONFIDENTIALITY

All information contained in this tender document is confidential and may not be disclosed, published or advertised in any manner without written authorization from BYPL. This includes all bidding information submitted.

All tender documents remain the property of BYPL and all bidders are required to return these documents to BYPL upon request.

Bidder(s) who do not honour these confidentiality provisions will be excluded from participating in future bidding events.

The bidder shall sign a Non-Disclosure Agreement (NDA) in the format attached in tender document and submit along with its bid.

11. CONTACT INFORMATION

Technical & Commercial clarification, if any, regarding this tender shall be sought in writing and sent by e-mail to the following e-mail IDs:

Address	Name/ Designation	E-mail Address / Phone Number
Technical		
IIIrd Floor – A, Block, Shakti Kiran Building,	Mr. Ashish Gupta Addl. VP- Civil	Ashish.M.Gupta@reliancegroupindia.com /9312070329

Karkardooma, Delhi-110092	Mr. Amit Tomar Head (CES)	Amit.As.Tomar@reliancegroupindia.com /8010937150
	Mr. Ajay Gupta Head (Civil)	Ajay.S.Gupta@reliancegroupindia.com 9311098026
	All technical queries shall also be marked copy to Commercial team as per the details below.	
Commercial		
C&M Dept, 3rd Floor, A Block, BSES Yamuna Power Ltd Shakti Kiran Building, Karkardooma, New Delhi-110032	Mr. Vimal Kumar, DGM – (C&M)	Vimal.r.kumar@reliancegroupindia.com /011-4124 9388
	Mr. Prajay Mishra, Ast. VP – (Contracts)	Prajay.Mishra@reliancegroupinida.com /011-4124 9545
	Mr. Robin Sebastian, Head – (C&M)	Robin.Sebastian@reliancegroupindia.com /011-4124 9230

****

BYPL

BSES Yamuna Power Limited

SECTION – II

INSTRUCTIONS TO BIDDERS (ITB)

BYPL

BSES Yamuna Power Limited

SECTION-II

INSTRUCTIONS TO BIDDERS (ITB)

1. GENERAL

BSES YAMUNA Power Ltd (BYPL), hereinafter referred to as the "Company" is desirous for awarding work of "Turnkey project for Conversion of overhead electrical network into underground Utility system at two locations (Esplanade & More Sarai road) at Chandani chowk, Delhi" as notified in this tender document.

1.1 All the Bids shall be prepared and submitted in accordance with these instructions.

1.2 Bidder shall bear all costs associated with the preparation and delivery of its Bid, and the Company will in no case shall be responsible or liable for these costs.

1.3 The Bid should be submitted by the Bidder in whose name the bid document has been issued and under no circumstances it shall be transferred /sold to the other party.

1.4 The Company reserves the right to request for any additional information/documents and also reserves the right to reject the proposal of any Bidder, if in the opinion of the Company, the data in support of RFQ requirement is incomplete.

1.5 The Bidder is expected to examine all instructions, forms, terms & conditions and specifications in the Bid Documents. Failure to furnish all information required in the Bid Documents or submission of a Bid not substantially responsive to the Bid Documents in every respect may result in rejection of the Bid. However, the Company's decision in regard to the responsiveness and rejection of bids shall be final and binding without any obligation, financial or otherwise, on the Company.

1.6 The company reserves the right to split the order among various successful bidders inany manner it chooses without assigning any reason whatsoever.

2. SCOPE OF WORK

Detailed specification/scope of work is provided in Section-V of this tender document.

3. DISCLAIMER

3.1. This NIT is not an agreement and further it is neither an offer nor an invitation by BYPL to bidders or any other person for award of contract. The purpose of this NIT is to provide bidders information that may be useful to them in the preparation and submission of their bids.

3.2. This Document includes statements, which reflect various assumptions, which may or may not be correct. Each Bidder should conduct its own estimation and analysis and should check the accuracy, reliability and completeness of the information in this Document and obtain independent advice from appropriate sources in their own interest.

3.3. Neither Company nor its employees will have any liability whatsoever to any Bidder or any other person under the law or contract, the principles of restitution or unjust enrichment or otherwise for any loss, expense or damage whatsoever which may arise from or be incurred or suffered in connection with anything contained in this Document, any matter deemed to form part of this Document, provision of Services and any other information supplied by or on

behalf of Company or its employees, or otherwise arising in any way from the selection process for the work.

3.4. Though adequate care has been taken while issuing the Tender document, the Bidder should satisfy itself that Documents are complete in all respects. Intimation of any discrepancy shall be given to this office immediately.

3.5. This Document and the information contained herein are Strictly Confidential and are for the use of only the person(s) to whom it is issued. It may not be copied or distributed by the recipient to third parties (other than in confidence to the recipient's professional advisors).

3.6. It shall be deemed that by submitting a bid, a bidder agrees to release BYPL and its employees, agents and advisors irrevocably unconditionally fully and finally from any and all liability for any claims losses damages costs expenses or liabilities in anyway related to or arising from exercise of any rights and all performance of any obligations under this NIT and or in connection with the bid process to the fullest extent permitted by applicable law and waives any and all rights and all claims it may have in this respect whether actual or contingent whether present or in the future

3.7. BYPL and its employees and advisors also accept no liability of any nature whether resulting from negligence or otherwise arising from reliance of any bidder upon the contents of this NIT.BYPL may in its absolute discretion but without being under any obligation to do so, update amend or supplement the information assessment statement or assumptions contained in this NIT.

3.8. The issue of this tender document does not imply that BYPL is bound to qualify any bidder or to award the contract to any bidder. BYPL reserves the right to reject all or any of the bids without assigning any reasons whatsoever.

4. COST OF BIDDING

The Bidder shall bear all cost associated with the preparation, submission and processing of its Bid and the company will in no case be responsible or liable for the costs.

5. TENDER DOCUMENTS

5.1. The Scope of Work, Bidding Procedures and Contract Terms are described in the Bidding Documents. In addition to the covering letter accompanying Bidding Documents, the Bidding Documents include:

"Check List, Sections, Annexure & Formats as elaborated in CONTENT of this NIT."

5.2. The bidder is expected to examine the tender documents, including all Instructions, Forms, Terms and Specifications. Failure to furnish all information required by the tender documents or submission of a bid not substantially responsive to the tender documents in every respect may result in the rejection of the Bid.

6. AMENDMENT OF TENDER DOCUMENTS

6.1. At any time prior to the deadline for submission of Bids, the Company may for any reason(s), whether at its own initiative or in response to a clarification requested by a prospective Bidder,

alter/amend/modify the tender documents by corrigendum /amendment.

6.2. The corrigendum / amendment shall be part of tender document, pursuant to Clause 5.1, and it will be notified
(a) by way of uploading the corrigendum/amendment on BSES website (in case of public tender),
(b) in writing by e-mail to all the Bidders who have received the Bidding Documents by email. (in case of limited tender)

All such corrigendum & amendments will be binding on the bidders.

6.3. In order to provide prospective Bidders a reasonable time in which to take the Amendment into account in preparing their Bids, the Company may, at its discretion, extend the deadline for the submission of Bids.

7. PREPARATION OF BIDS & LANGUAGE

The Bid prepared by the Bidder, and all correspondence, documents etc. relating to the Bid exchanged by the Bidder and the Company shall be written in English Language. Any printed literature furnished by the Bidder may be written in another Language, provided that this literature is accompanied by English translation, in which case, for purposes of interpretation of the Bid. In case of ambiguity in the English translation, interpretation of the Company as regards to translation will be final.

8. DOCUMENTS COMPRISING THE BID

The Bid prepared and submitted by the Bidder shall comprise the following components:

(a) Techno-Commercial Bid & Price Bid as elaborated in RFQ. (STRICTLY AS PER FORMAT)
(b) All the Bids must be accompanied with the required EMD &Tender Fees against each tender.

9. BID FORM

The Bidder shall complete “Original” Bid Form and submit it along with details mentioned in Techno-Commercial bid (without filling price).

10. BID PRICES

Bidders shall quote for the entire Scope of work with prices for individual items. The bidder is required, at his expense, to obtain all the information he may require to enable him to submit his tender including necessary visits to the site to ascertain the local conditions, procurement of necessary materials, labour, etc., requirements of the local/government/public authorities in such matters.

11. BID CURRENCIES

Prices shall be quoted in Indian Rupees Only.

12. PERIOD OF VALIDITY OF BIDS

12.1. Bids shall remain valid & open for acceptance for a period of 180 days from the date of opening of the Bid.

12.2. Notwithstanding above, the Company may solicit the Bidder‘s consent to an extension of the Period of Bid Validity and the bidder shall be liable to extend the same at the sole cost and consequences of the bidder and no claim from the company in this regard shall be maintainable.

13. ALTERNATIVE BIDS

Bidders shall submit Bids, which comply with the Tender Documents. Alternative Bids will not be considered. The attention of Bidders is drawn to the provisions regarding the rejection of Bids in the terms and conditions, which are not substantially responsive to the requirements of the Tender Documents.

14. FORMAT AND SIGNING OF BID

14.1. The original Bid Form and accompanying documents (as specified in Clause 9.0), clearly marked "Original Bid", must be received by the Company at the date, time and place specified in Section-I, RFQ.

14.2. The original copy of the Bid shall be typed or written in indelible ink and shall be signed by the Bidder or a person or persons duly authorized to sign on behalf of the Bidder. Such authorization shall be indicated by written Power-of-Attorney accompanying the Bid. All pages of the bid shall be signed by the signatory accompanied with seal of the Agency.

14.3. The Bid shall contain no interlineations, erasures or overwriting except as necessary to correct errors made by the Bidder, in which case such corrections shall be signed by the person or persons signing the Bid.

15. Deleted

16. DEADLINE FOR SUBMISSION OF BIDS

16.1. The bid must be timely uploaded in the online tendering portal as detailed in the clause no. 6 in Section–I, RFQ.

16.2. The Company may, at its discretion extend the deadline for the submission of bids by amending the Tender Documents in accordance with Clause 6.0, in which case all rights and obligations of the Company and Bidders previously subject to the deadline will thereafter be subject to the deadline as extended.

17. ONE BID PER BIDDER

Each Bidder shall submit only one Bid by itself. A Bidder who submits or participates in more than one Bid will cause all those Bids to be rejected.

18. LATE BIDS

Any Bid received by the Company after the deadline for submission of Bids prescribed by the Company, pursuant to Clause 16.0, will be declared "Late" and rejected and returned unopened to the Bidder.

19. MODIFICATIONS AND WITHDRAWAL OF BIDS

The Bidder is not allowed to modify or withdraw its Bid after the due date of bid submission.

20. EVALUATION OF BID

20.1. The bids will be evaluated techno-commercially on compliance to tender terms and Conditions.

20.2. BYPL reserves the right to ask the bidders to provide any additional information including breakup of the prices as quoted by them against line items.

21. CLARIFICATION OF BIDS

To assist in the examination, evaluation and comparison of Bids, the Company may, at its discretion, ask the Bidder for a clarification of its Bid. All responses to requests for clarification shall be in writing and no change in the price or substance of the Bid shall be sought, offered or permitted

22. PRELIMINARY EXAMINATION OF BIDS / RESPONSIVENESS

22.1. Company will examine the Bids to determine whether they are complete, whether any computational errors have been made, whether required sureties have been furnished, whether the documents have been properly signed, and whether the Bids are generally in order.

22.2. Arithmetical errors will be rectified on the following basis. If there is a discrepancy between the unit price and the total price per item that is obtained by multiplying the unit price and quantity, the unit price shall prevail and the total price per item will be corrected. If there is a discrepancy between the Total Amount and the sum of the total price per item, the sum of the total price per item shall prevail and the Total Amount will be corrected.

22.3. Company will determine the substantial responsiveness of each Bid to the Tender Documents including execution capability and acceptable quality of the services offered. A substantially responsive Bid is one, which conforms to all the terms and conditions of the Tender Documents without deviation.

22.4. Bid determined as not substantially responsive will be rejected by the Company and may not subsequently be made responsive by the Bidder by correction of the non-conformity.

23. EVALUATION AND COMPARISON OF BIDS

23.1. The evaluation of Bids shall be done based on the delivered cost competitiveness basis.

23.2. The evaluation of the Bids shall be a stage-wise procedure. The following stages are identified for evaluation purposes: In the first stage, the Bids would be subjected to a responsiveness check later on the Techno-Commercial Proposals and the Conditionality of the Bidders would be evaluated.

Subsequently, the Financial Proposals along with Supplementary Financial Proposals, if any, of Bidders with Techno-commercially Acceptable Bids shall be considered for final evaluation.

23.3. The Company's evaluation of a Bid will take into account, in addition to the Bid price, the following factors, in the manner and to the extent indicated in this Clause:

(a) Contract completion schedule
(b) Conformance to Qualifying Criteria
(c) Deviations from Tender Documents
(d) Conformity and compliance to the conditions/details provided in pre-bid meeting
(e) Change in the quantity from mentioned in the tender

23.4. The cost of all quantifiable deviations and omissions from the specification, terms and conditions specified in Tender Documents shall be evaluated.

23.5. The Company will make its own assessment of the cost of any deviation for the purpose of ensuring fair comparison of Bids.

23.6. Adjustments in price, if any, based on the above procedures, shall be made for the purposes of comparative evaluation only to arrive at an “Evaluated Bid Price”. Bid Prices quoted by Bidders shall remain unaltered.

24. CONTACTING THE COMPANY

24.1. From the time of Bid opening to the time of contract award, if any Bidder wishes to contact the Company on any matter related to the Bid, it should do so in writing.

24.2. Any effort by a Bidder to influence the Company and/or in the Company‘s decisions in respect of Bid evaluation, Bid comparison or Contract Award, will result in the rejection of the Bidder‘s Bid.

25. THE COMPANY ’S RIGHT TO ACCEPT ANY BID AND TO REJECT ANY OR ALL BIDS

The Company reserves the right to accept or reject any Bid and to annul the Bidding process and reject all Bids at any time prior to award of Contract, without thereby incurring any liability to the affected Bidder or Bidders or any obligation to inform the affected Bidder or Bidders of the grounds for the Company‘s action.

26. AWARD OF CONTRACT

The Company will award the Contract to the successful Bidder whose Bid has been determined to be the lowest-evaluated responsive Bid, provided the Bidder has been determined to be

qualified to satisfactorily perform the Contract. Company reserves the right to award order to other bidders in the tender, provided it is required for need of the work. The full or part of the contract may be awarded to other bidder(s) on differential rates.

27. THE COMPANY'S RIGHT TO VARY QUANTITIES

The Company reserves the right to vary the quantity i.e. increase or decrease the Numbers/ quantities without any change in terms and conditions before the award of Contract. Further BYPL may increase or reduce the area/ scale of operations / increase or decrease the Numbers/ quantities after the start of work execution under the contract and the size of contract / contract value shall be adjusted accordingly. In case of decrease in base resources decided mutually then contract value will be adjusted accordingly.

28. LETTER OF INTENT/ NOTIFICATION OF AWARD

The letter of intent/ Notification of Award shall be issued to the successful Bidder whose bids have been considered successful for award of work/order.

The successful Bidder shall be required to furnish acceptance of LOI / notification of award within 7 days of issue of the letter of intent /Notification of Award by Company.

29. CORRUPT OR FRAUDULENT PRACTICES

29.1. The Company requires that the Bidders observe the highest standard of ethics during the entire period of work execution under the Contract. In pursuance of this policy, the Company:

(a) Defines, for the purposes of this provision, the terms set forth below as follows:

"Corrupt practice" means behaviour on the part of officials in the public or private sectors by which they improperly and unlawfully enrich themselves and/or those close to them, or induce others to do so, by misusing the position in which they are placed, and it includes the offering, giving, receiving, or soliciting of anything of value to influence the action of any such official in the procurement process or in contract execution; and "Fraudulent practice" means a misrepresentation of facts in order to influence a award process or the execution of a contract to the detriment of the Company, and includes collusive practice among Bidders (prior to or after Bid submission) designed to establish Bid prices at artificial non-competitive levels and to deprive the Company of the benefits of free and open competition.

(b) Will reject a proposal for award if it determines that the Bidder recommended for award has engaged in corrupt or fraudulent practices in competing for the contract in question;

(c) Will declare a firm ineligible either indefinitely or for a stated period of time, to be awarded a contract if it at any time determines that the firm has engaged in corrupt or fraudulent practices in competing for, or in executing, a contract.

29.2. Furthermore, It shall be the responsibility of the Bidders to read and understand & aware of the provision stated in the Terms and Conditions of tender before participating in the tender.

30. PROCESS TO BE CONFIDENTIAL

Information relating to the examination, clarification, evaluation and comparison of Bids and recommendations for the award of a contract shall not be disclosed to Bidders or any other persons not officially concerned with such process. Any effort by a Bidder to influence the Company's processing of Bids or award decisions may result in the rejection of the Bidder's Bid.

*****

BYPL

SECTION – III

SPECIAL TERMS & CONDITIONS (SCC)

BYPL

SECTION – III:

SPECIAL TERMS & CONDITIONS (SCC):

These Special Terms and Conditions of Contract (SCC) shall be read in conjunction with the Terms and Conditions of the Contract, General Conditions of Contract (GCC), Scope of Work and other documents forming part of the contract wherever the context so requires. Notwithstanding the subdivision of documents into separate sections and volumes, every part of each such document shall be deemed to be supplementary to and complementary of every other part.

1. DEFINITIONS

1.1. Engineer-in-charge (EIC) / Officer-in-charge (OIC)

The term “Engineer-in-charge (EIC)" / “Officer-in-charge (OIC)” shall mean the Company's nominated representative for the purpose of supervision of the execution of the Contract. The same shall be mentioned in the Contract.

2. SCOPE OF WORK

The scope includes providing services as per detailed scope of work as enumerated in Section-V.

3. EFFECTIVE DATE, TIME AND VALIDITY

3.1. The order/agreement shall become effective for all purposes from the date to be specified under the agreement and continue to remain in force for the period mentioned in the contract or any further extension thereof.

3.2. The extension of the agreement shall be the sole prerogative of BYPL. BYPL reserves the right to renew/extend the agreement.

3.3. Illustrative Conditions for Renewal and Extension of Agreement Beyond Agreement Duration:

BYPL may, at its sole discretion, consider renewal and extension of the agreement beyond agreement duration. Such a decision for extension, if envisaged, may be taken 1 month before the expiry of the agreement. However, BYPL may, at its discretion, renew even within One Month of expiry of agreement. BYPL reserves the right not to renew and extend the agreement beyond agreement duration.

3.4. BYPL shall notify the Contractor of any possible extension or request the Contractor to furnish additional information, as may be required, for granting such extension.

BYPL

4. ORDER VALUE

Value of the Contract will be contracted out on the basis of finalized rates.

The rates shall remain firmed and fixed for the period of contract. They shall not be subject to escalation and any increase in the amount due to-

(a) increased labour costs including minimum wages or costs related to vehicles / materials/ other equipments provided,
(b) changes in insurance premiums, and/or
(c) changes in legislations or regulations relating to the Service.

5. RATES & ESCALATION

5.1. The rates will remain firm and fixed for the entire duration of the contract and not subject to escalation or increases on any account/reason(s) whatsoever.

5.2. The rates set out above are also inclusive of reasonable incidental expenses incurred by Contractor on the following:

i) Cost of Labor, tackles and supervision.
ii) All taxes and levies, including but not limited to, GST, work contract tax, etc as applicable during the currency of the contract.
iii) Conveyance of the Contractor's employees up to place of work and/ or from one place to another place for carrying out the job.
iv) Rates shall be valid for all heights and locations.
vi) All other expenses incidental to the job.
vii) The Company shall pay only once against the service provided irrespective of the fact that the Contractor might have to take more than one attempt for providing the service.
viii) Compliance with all labour laws including Minimum Wage Act, Bonus Act etc in respect of employees engaged by the Contractor for the discharge of services as per this agreement.

5.3. No idle labour charges will be admissible in the event of any suspension of work by the Company or stoppage caused in the work resulting in contractors' labour or equipments being rendered idle due to any cause at any time.

6. CONTRACT CUM PERFORMANCE SECURITY BANK GUARANTEE (CPBG)

6.1. Contractor shall furnish the CPBG in the prescribed format within 15 days from the date of issue of LOI / Work Order for due performance of the provisions of Work Order/Agreement.

6.2. The CPBG shall be of 10% (Ten percent) of the contract value inclusive of taxes & duties and shall be valid till the defect liability period plus three (3) months towards the claim period or latest RBI guidelines (if any) regarding claim period, whichever is higher.

BYPL

6.3. The CPBG shall be issued from any nationalized / scheduled bank as per company format.

6.4. The Company shall reserve the right to invoke the CPBG unconditionally and without recourse to the Contractor, if there is failure to perform any part of the Agreement for whatsoever reason. This clause is pertaining to performance of contractual obligations and the decision of Company shall be final in this regard.

6.5. In the event of any claim or any other outstanding Contractual obligations remaining unfulfilled, the Contractor shall be required to extend the CPBG till the settlement of all claims and completion of all Contractual obligations at the cost and consequences of contractor.

6.6. In the event, in Company's sole judgment, the Contractor has fulfilled all its obligations under this Agreement, The CPBG shall be released without any interest after the expiry of CPBG and its claim period as mentioned above upon compulsory submission of i) No Demand Certificate ii) Indemnity Bond iii) Work completion certificate issued by BYPL

6.7. If the CPBG is or becomes invalid for any reason (other than its expiry), the Contractor shall immediately notify the Company/BYPL and provide within five (5) days a replacement CPBG in the form set out in the Contract/Agreement.

6.8. Not later than sixty (60) Business Days before the expiry of the CPBG, the Contractor shall, upon request of the Company/BYPL obtain an extension of the validity of such CPBG for the period stated in such request by the Company/BYPL and provide a copy of such renewed CPBG.

6.9. It is Contractor's responsibility to incur charges/cost to maintain and for extension of CPBG without claiming reimbursement from the company/BYPL.

7. PAYMENT TERMS

7.1. Payment shall be released on Pro-rata basis as per below Payment schedule:

BYPL

7.1.1. Civil work

S. NO.	DESCRIPTION OF ITEM	UNIT	PAYABLE (%) ON MILESTONE COMPLETION (Calculated on Quoted civil rates only)
	Duct, Road & Related works-Payment Stages (To be paid on pro-rata basis.)		
1	**Duct, Road & Related works**		
(i)	**Milestone I**	**Activity Unit**	
	Precast - Complete Supply of RCC U drain opening size 600x600 of M-50 grade with Precast Trench Cover of Grade M-30, RCC Utility duct opening size 600x900 of grade M-50 with Precast duct cover of Grade M-30, RCC cable duct opening size 600x600 of Grade M-50 with Precast cable duct cover of Grade M-30,RCC chamber opening size 750x1000mm of Grade M-50, RCC Precast box culverts size 600x600mm of Grade M-50, RCC Feeder pillar plinth of Grade M-30, RCC Precast street light pole foundation of Grade M-30, (1 Meter) central verge & Supply of RCC chamber opening size 900x900X1200 mm of Grade M-50 including Cover.	Activity Unit	30.00%
(ii)	**Milestone II**	**Activity Unit**	
	Earthwork in Excavation, Backfilling, Providing & Laying PCC - M10, Debris disposal & Demolition work	Activity Unit	10.00%
(iii)	**Milestone III**	**Activity Unit**	
	Providing & Laying Dry Lean concrete, Steel Reinforcement, Concrete Pavement & Expansion Joint	Activity Unit	20.00%
(iv)	**Milestone IV**	**Activity Unit**	
	Precast- Erection & Installation of Items supplied under Milestone I, Supply & Fixing of Structural steel work, Core cutting & Providing Crane for Lifting	Activity Unit	10.00%
(v)	**Milestone V**	**Activity Unit**	
	Providing & Laying Interlocking Paver, Kerb stone, 50 mm thick Granite work, NP3 RCC Hume pipes & Drain or sewer connection	Activity Unit	10.00%
2	**Testing & Final Handover**	**Activity Unit**	
	After Issuance of Completion Certificate from Client	Activity Unit	20.00%
	TOTAL		**100.00%**

BYPL

7.1.2. Electrical work

Electrical Works - Payment Stages (To be paid on pro-rata basis).			
S. NO.	**DESCRIPTION OF ITEM**	**UNIT**	**PAYABLE (%) ON MILESTONE**
1	**Milestone I**	**Activity Unit**	
	Supply of FRP Street light poles & its fittings, Distribution Substation Monitoring System, Safe On Power Purifier, miscellaneous materials (Chemical earthing, earthing strip and straight through and termination joints etc.)	Activity Unit	**10.00%**
2	**Milestone II**	**Activity Unit**	
	Laying of HT/LT cable in electrical duct with joint and termination, Installation of RMU and ACB, Feeder Pilaer, Connection of Feeder Pillar to distribution box, Cable connection to consumer meter and energisation	Activity Unit	**40.00%**
3	**Milestone III**	**Activity Unit**	
	Installation, Testing, and Commissioning of FRP Type Street light pole with fittings along with Safe ON power purifier, DSMS, earthing of all electrical equipment	Activity Unit	**20.00%**
4	**Milestone IV**	**Activity Unit**	
	Quality and safety compliance including Electrical inspector clearance	Activity Unit	**10.00%**
5	**Milestone V**	**Activity Unit**	
	Final Testing, commissioning & Final Handover in compliance of all necessary clearances	Activity Unit	**10.00%**
6	**Milestone VI**	**Activity Unit**	
	Dismantling and Transportation of dismantled materials to BYPL store / site store	Activity Unit	**10.00%**
	TOTAL		**100.00%**

7.2. The contractor shall submit original bill (hard copy) along with all supporting documents at Vendor Support Cell of BYPL. The bills shall be made in favor of BSES Yamuna Power Ltd, Shakti Kiran Building, Karkardooma, Delhi.

7.3. Company shall make payments, without any interest/charges and after deduction of taxes, penalties etc. as applicable, against the bills within 30 days from the date of receipt of the bills, duly verified and certified by Engineer-in-Charge.

7.4. Notwithstanding anything with the release of payment of bills by the Company to the Contractor, the Contractor shall at all times ensure the due and timely payment of wages to all persons, including workmen, employed by the Contractor pursuant to this Agreement and compliance with other applicable statutory requirements within time limits. Nothing contained herein shall establish any link between release of payment of the bill by the Company to the Contractor and the payment of any salary, wages or any other dues whatsoever by the Contractor to its employees and workmen.

7.5. The company may modify the procedure for the submission of bills. The Contractor shall be obliged to submit its bill as per the procedure stipulated by the company from time to time.

8. INSURANCE

8.1. The Contractor shall be responsible for insuring its personnel, materials, and machinery deployed at the site for the awarded package. Copies of such insurance policies shall be furnished to the Purchaser prior to the start of work.

The Contractor, at their own cost, shall procure and maintain a Comprehensive Marine cum
Storage cum Erection (MSE) insurance policy covering the entire Project cost.

Such insurance coverage shall be held jointly in the names of the Purchaser and the Contractor. The Contractor shall have the authority to liaise directly with the insurance company or companies throughout the Contract period and shall be responsible for maintaining all insurance policies in force.

The Contractor shall bear all risks of loss or damage to equipment during handling, transportation, storage, erection, commissioning, and all activities until the satisfactory completion and handover of Performance Guarantee tests of the plant. The Contractor shall
promptly present all claims and shall be responsible for repairing or replacing any damaged
or lost equipment.
For all insurance policies obtained, the Contractor shall handle claim settlements directly with underwriters without imposing any liability on the Purchaser. The Contractor shall arrange for replacement or rectification promptly without awaiting insurance claim settlements, bearing all related costs. Such events shall not entitle the Contractor to any extension of contract time or additional cost claims.

Marine Transit Risk and Erection All Risk Coverage:

The Contractor shall secure coverage for marine transit risk related to supply materials at 100% of their declared value and erection all-risk coverage for 100% of the Project cost. This coverage shall include, but is not limited to, loss or damage from AOG perils, earthquakes, and acts of terrorism.

Third Party Insurance:

Prior to commencing work, the Contractor shall obtain third-party insurance at their own cost to cover any loss, damage, or injury to property or persons (including those of the public, employees, and representatives of any outside agency or the Company) arising out of or in connection with performance of the work or temporary works. The Contractor shall be responsible for settling all claims related to third-party insurance without involving the Purchaser/Owner and shall promptly arrange replacement or rectification at their own cost.

Group Personal Accident Insurance:

The Contractor shall secure accidental insurance coverage for all staff deployed under this Agreement, covering death, permanent total disability, and partial permanent disability due to external accidents, with a minimum coverage of Rs. 15 Lakh (Table

C). Permanent total disability coverage shall be 125% of the basic sum assured. The Contractor shall ensure same-day on-the-spot claim settlement with the legal heirs of any victim, without awaiting insurance claim settlements and without any liability on BYPL. The Contractor shall bear the full premium costs of this coverage and provide copies of all relevant policies within fifteen (15) days of commencement of work.

Workman Compensation:
The Contractor shall obtain and maintain a valid insurance policy under the Workman Compensation Act to cover all workers who are not already covered under Employees' State Insurance (ESI) and Provident Fund (PF), engaged in executing the jobs covered under this Contract. A copy of the insurance policy shall be provided to the Company for reference and record-keeping. If all workers are covered under ESI and PF, the Contractor shall certify this status to the Company.

The Contractor shall indemnify and keep the Company indemnified against all claims for compensation under the provisions of the Workmen Compensation Act, 1923, as amended from time to time, or under any other applicable law related to compensation payable to workers employed by the Contractor, subcontractors, or agents for work under this Contract. This indemnity includes all costs, expenses, and liabilities incurred by the Company in connection with such claims, without prejudice to the Company's rights to recover amounts.
The Company shall be entitled to deduct from any amounts due or to become due to the Contractor all moneys paid or payable in connection with such claims, costs, or expenses. The Contractor agrees to abide by the Company's decision concerning the sums payable under this clause.

9. PENALTY

9.1. Penalty related to HR issues shall be applicable as defined in GCC.
9.2. Penalty for non-compliance of statutory regulations shall be applicable as defined in GCC.
9.3. Penalty for misconduct/failure in performance of task under the agreement shall be applicable as defined in GCC.
9.4. Penalty for violation of safety & quality norms shall be applicable as defined in Annexure-III, EHS Conditions of the Contract.
9.5. Total aggregated Liquidated Damages and Penalty against various clauses of the contract shall be limited to a maximum 10% of the Contract Value.

10. GUIDELINES REGARDING INSPECTION & MAINTENANCE OF PITS /DUG AREA WHILE DOING WORK AT SITE IN BYPL AREA

The contractor shall ensure strict compliance of the following directions:
a) The sites of all manholes, pits, holes, tanks or any other opening in the ground of any kind shall be regularly inspected and maintained.
b) Schedule and protocols of inspections and maintenance shall be drawn up and notified to BYPL.
c) These sites shall be cordoned off to render them inaccessible to the public.
d) The existence of these sites shall be clearly & visibly marked by the display of signboards/signages.
e) If they are required to be covered, it shall be ensured that the covers are in place.
f) If required, as per law, prior permission from authorities shall be secured before the commencement of work.

g) Contractor shall also comply all the clause as stipulated in the scope of work.

The execution contractor shall solely be responsible for all the preventive and protective environmental steps as per guidelines. Any violations from the above guidelines has been viewed very seriously by the authorities. The contractor is liable for the penalties / other action by the authorities, the contractor shall indemnify BYPL its employees/directors/associates from all liabilities/penalties/claims including litigation expenses on this account.

11. DERC GUIDELINES & REGULATIONS

The bidder shall make themselves fully aware & familiarise with prevailing DERC guidelines/regulations.

12. DEFECT LIABLITY PERIOD:

The defects liability period shall be 12 (Twelve) calendar months from the date of the successful completion and proper handing over the project. In case any defect in the work is observed during the defect liability period, the same shall be rectified by the Contractor at own cost including supply of all materials (as per prevailing rates), labour, equipment and any other appliance in this regard for the fulfilment of all obligations under the Contract and to the satisfaction of the Company. Contractor shall be responsible for cleaning and maintenance of electric network duct and Multi Utility Duct during the defect liability period.

BYPL

BSES Yamuna Power Limited

SECTION – IV

GENERAL TERMS & CONDITIONS(GCC)

BYPL

SECTION – IV

GENERAL TERMS & CONDITIONS(GCC)

This GCC shall form an integral part of the Agreement and will be of full force and effect as if they were expressly set out in the body of the Agreement.

Reference to any legislation or law to any provision thereof shall include references to any such law as it may, after the date hereof, from time to time, amended, supplemented or re-enacted, and any reference to a statutory provision, shall include any subordinate legislation made from time to time under that provision.

1. DEFINITION & INTERPRETATION

1.1 Definition

In the Agreement (as defined below) the words and expressions defined below shall have the meanings assigned to them herein except where the context requires otherwise:

1.1.1 "Accounting Year" means the financial year commencing from 1 April of any calendar year and ending on 31 March of the next calendar year.

1.1.2 "Applicable Laws" means all Law / Laws in force and effect, as of the date hereof and which may be promulgated or brought into force and effect hereinafter in India including any revisions, amendments or re-enactments including without limitation regulations, rules and notifications made there under and judgments, decrees, injunctions, writs and orders of any court or regulators or quasi-judicial body or any appropriate authorities, as may be in force and effect during the subsistence of the Contract. It includes Law/Laws of Country/State legislation, statues, ordinance, notification, circular, regulations and other Laws, and bye Laws of any legally constituted public authority.

1.1.3 "Change in Law" means the occurrence of any of the following after the execution of agreement:

(i) The enactment of any new Indian Law;
(ii) The repeal, modification or re-enactment of any existing Indian Law;
(iii) The commencement of any Indian Law which has not entered into effect until the date of performance the Contract;
(iv) Change in the interpretation or application of any Indian Law by a court as compared to such interpretation or application twenty-eight (28) days prior to the last date of submission of Tender;
(v) It also includes changes in the tax rates upward or downward.

1.1.4 "Change in Service" means any addition to, deletion from, suspension of or other modification, to the Services, or to the quality, function or as delineated in this agreement, including any such addition, deletion, suspension or other modification, which requires a change in one or more of the service specification and the completion schedule.

1.1.5 "Communication" means instruction or information or written notice issued on letter head or through electronic mail exchange between Parties and excludes verbal or short messaging services (SMS). The notice shall be served by delivering a copy by electronic mail, or registered post/speed post etc. Unless otherwise stated in the agreement, all communications to be given under the Contract shall be in writing. Communication may be sent to competent authority or authority delegated to such officer/employee. Communication shall be on letter head of Party signed by competent authority/authorized signatory of the Party.

1.1.6 **"Company**/Owner/Purchaser/First Party " the terms used in this agreement shall refer to BSES YAMUNA Power Limited (BYPL) having its office at Shakti Kiran Building,

Karkardooma, Delhi-110032 and shall include its authorized representatives, agents, successors and assignees

1.1.7 **"Contractor/**Agency/Vendor**"** means the successful bidder to whom this Agreement is awarded. It is entity named in the Execution Cover and includes assignees, administrator, executors, successors, associated company/subsidiary/joint venture/firm/representative of the Contractor. It is also termed as 'Contractor' or 'Agency'.

1.1.8 Contract" /" Agreement/"Work Order" means the agreement between the Company and the Contractor for the performance of the Services, including the Contract / Agreement/ Work Order duly signed and executed between the Parties, the letter of acceptance, the Conditions of Contract, the schedules, Annexures, the Company/BYPL's requirements, including but not limited to the tender, other tender documents and such further documents which are listed in the Contract / Agreement/Work Order and includes any amendment thereto made in accordance with the provisions hereof giving binding effect to the terms and conditions agreed by the Parties. This includes Work Order / Letter of Intent(LOI) issued to the Contractor by the Company/BYPL.

1.1.9 "Agreement Period" shall mean duration of Services to be performed and includes extension thereof after mutual consent of both Parties.

1.1.10 "Agreement Value/Consideration" means the price of the defined Services including taxes payable to the Contractor for the performance of the Services subject to such additions thereto and deductions there from as may be made under the provisions of this Agreement. The Agreement Value is in consideration of providing the Service by the Contractor as per scope of work and as per Service specifications stipulated in the Agreement; the Agreement Value includes all and any fees, charges, local cess, taxes (GST and Income Tax), levies together with all cost and expenses. The Agreement Value may also term as 'Service Fee(s)' or 'Agreement fees'/Consideration elsewhere in the Agreement. Agreement Value is fixed lump sum for the Agreement Period unless mentioned in Agreement elsewhere.

1.1.11 "Force Majeure" shall have the meaning as ascribed in this agreement and annexures thereto.

1.1.12 "Good Industry Practice" means the exercise of the highest degree of skill, diligence, prudence and foresight in compliance with the obligations under the Contract which would be expected from a skilled and experienced Contractor engaged, being internationally accepted and customized in day to day performance in industry including for the supply of Manpower.

1.1.13 "HSE Conditions" shall mean the BYPL's health, safety and environment conditions containing the requirements and conditions to be met with respect to safety, health and environment.

1.1.14 "KPI" shall mean Key Performance Indicator as set out in the Contract/Agreement, its schedules/annexures etc. The performance of the Manpower employed by the Contractor for execution of Services shall be measured through KPI. The payment to Contractor shall be based on Manpower's performance as measured through KPI. It includes metrics in numerical, frequency and measuring process. Total manpower shall be monitored & calculated skill wise but it will be cumulative on monthly basis

1.1.15 "Manpower" means a person/s, labour (including Contractor's staff / personnel) known, introduced, security personnel employed and deployed by the Contractor in Contractor's provision of the Services who has skill, efficiency and mannerism to execute, perform Services under this Contract as per Scope Of Work of the Contract. The Manpower deployed shall have valid licenses, PAN card details / KYC information.

1.1.16 "Contract cum Performance Bank Guarantee (CPBG)" means the bank guarantee to be procured in accordance with terms of agreement for the performance of the Contractor's obligations under the Contract. The CPBG format is furnished in the Annexure, annexed to agreement.

1.1.17 "Service(s)" / "Works" shall mean Company/BYPL's requirements describing in detail including the nature of the Services and activities to be performed by the Contractor and its Manpower, in accordance with specifications, the duration of such requirement, and Services performed, the expected time of commencement and completion, detailed responsibilities and other relevant particulars. It is 'scope of work' which is to be executed, performed successfully and satisfactorily by the Contractor in accordance with the Contract and ancillary services as may be Communicated by the BYPL from time to time under the Contract Period.

1.1.18 "Site" means the designated place/office or establishment or construction site, office, branch, including right of way and/or places provided by the BYPL where the Services is to be executed and any other place as may be specifically designated in the Contract/Agreement as forming part of the Site or designated as such by the Company/BYPL.

1.1.19 "Sub-Contractor" means a Sub-Contractor whom a part of the Contract is Sub Contracted by the Contractor with the prior written approval of the Company/BYPL, and the permitted legal successors in title to such person, but not any assignee of such person.

1.1.20 "Sub-Contract" shall mean obligations under the Contract have been awarded by the Contractor to Sub-Contractor.

1.1.21 "Tax Invoice" /" Running Bill" (RA Bill/bill) shall have the meaning ascribed to it under GST Laws.

1.2 INTERPRETATION

In the Contract except where the context requires otherwise:

1.2.1 Words indicating one gender include all genders

1.2.2 "Written" or "in writing" means hand-written, written, or electronically made and resulting in a permanent record

1.2.3 Any reference to any provision of an act of Parliament or of a state legislature shall be construed, at the particular time, as including a reference to any modification, extension or re-enactment thereof, to all instruments, orders or regulations then in force

1.2.4 The singular shall include plural and vice versa, and words denoting natural persons shall include partnerships, firms, companies, corporations, joint ventures, trusts, associations, organizations or other entities

1.2.5 The headings are inserted for convenience and shall not limit, alter or affect the meaning of the Contract.

1.2.6 The terms defined in schedule and the BYPL's Requirements shall have the same meaning ascribed thereto when used elsewhere in the Contract and vice versa;

1.2.7 The words "include" and "including" shall be construed without limitation

1.2.8 The schedules/annexures shall form an integral part of the Conditions of Contract and shall be in full force and effect as though they were expressly set out in the body of the Conditions of Contract.

1.2.9 The word "consent" wherever used, shall mean prior written consent;

1.2.10 In the event any portion or all of the Contract is held to be void or unenforceable, the Parties agree to negotiate in good faith to arrive at an amicable understanding which shall accomplish the intent of the Parties as originally set forth in the Contract;

1.2.11 No failure on the part of any Party to exercise, and no delay in exercising, any right hereunder shall operate as a waiver thereof, and no single or partial exercise of any such right shall preclude any other or further exercise thereof or the exercise of any other right

1.2.12 References to recitals, Articles or schedules in the Contract shall, except where the context otherwise requires, be deemed to be references to recitals, Articles and schedules of or to the Contract; and

1.2.13 In case the day on or by which any thing is to be done is not a Business Day, that thing must be done on or by the immediately occurring next Business Day

2. PRIORITY OF CONTRACT DOCUMENTS

The several documents forming the agreement are to be taken as mutually explanatory of one another, but in case of ambiguities or discrepancies, the same shall be explained and adjusted by the company, who shall, accordingly, issue suitable instructions thereon to the Contractor. In such event, unless otherwise provided in the agreement or explained by way of instructions by the company, as mentioned above, the priority of the documents forming the Agreement shall be as follows:

i) Contract Agreement/Work Order.
   (a) Special Conditions of Contract
   (b) General Conditions of Contract
(ii) The Letter of Acceptance/ Intent
(iii) Agreed Minutes of the Tender Negotiation Meetings
(iv) Agreed Minutes of the Tender Technical Meetings
(v) The Priced Bill of Quantities
(vi) The Technical Specifications / Scope of work
(vii) The Tender document, including all Appendices and/or Addenda, Corrigendum the latest taking precedence.

In the event of any conflict between the above-mentioned documents, the more stringent requirement or conditions which shall be favourable to the company shall govern and the decision of company/BYPL shall be final and binding upon the parties.

3. AMENDMENT

Any modification, amendment or other change to the Agreement shall be affected only by a written instrument signed by the authorized representatives of both, the Company and the Contractor.

4. LANGUAGE AND MEASUREMENT

All correspondence and documents relating to this order placed on the Contractor shall be written in English language. Metric System shall be followed for all dimension, units etc.

5. EXAMINATION OF SITE & LOCAL CONDITIONS

The contractor is deemed to have visited all the sites that comes under Company's licensed area under the Contract and therefore, ascertained all site conditions and information pertaining to the services to be provided under this contract. The company shall not accept any claim whatsoever arising out of the difficulties at site/terrain/local conditions, if any.

6. TAXES & DUTIES

(i) Prices shall be inclusive of all taxes and duties including labour cess (except GST). However, Income Tax (TDS) as per applicable rate in accordance with Income Tax Act will be deducted from contractor's bills.
(ii) GST at actual shall be paid extra on submission of GST Registration and self-declaration on Contractor's letter head stating that you have deposited/or will deposit the Tax as per the applicable GST laws. Contractor shall furnish its GST registration number.

(iii) Any statutory variations i.e. increase/decrease in Taxes / Duties introduced by central Govt. / State Govt. shall be reimbursed/recovered to/from Contractor against documentary evidence and proof.

(iv) As Per Notification No. 39/2021 # Central Tax dated 21st December, 2021 w.e.f 01/01/2022 registered person (ie, Recipient/Purchaser) can avail tax credit on those invoices only which have been reflected in GSTR 2A or GSTR2B (it means 100% matching of invoice is required). Also, GST has to be deposited by Supplier/Contractor by filing of GSTR- 1 and GSTR-3B.

(v) In view of above, if the same is not complied with by the supplier/Contractor and the Recipient/Purchaser is not in position to avail / utilize Input Tax Credit due to non-compliance or non-filing of GSTR-1 and GSTR-3B for the month/quarter (as applicable) in which the supply was made, then Recipient/Purchaser has right to hold 100% GST amount from next payment due of the subsequent month till the time default is not cured.

(vi) For releasing of the payment kept on hold on account of non-compliance of GST Act, supplier/Contractor shall submit payment proof i.e GST Portal screenshot reflecting name of Recipient/Purchaser along with GSTR-1 and GSTR-3B for month/quarter (as applicable) in which the same has been discharged. Payment shall not be released, till the time necessary proof showing the discharge of GST liabilities by the contractors for the period in default are submitted to the Company.

(vii) Further, the recipient/purchaser shall also be entitled to recover any financial loss suffered by the Company (including tax, interest, penalty and lapse of input credit) due to non-compliance or non-filing of GSTR-1 and GSTR-3B by the supplier/Contractor.

(viii) In case where delivery of goods is being made on FOR site basis, the Supplier/Contractor is responsible to comply with rules applicable for E-way bill. Any violation in provision of E-way Bill will attract penalty and seizure of Transit Material. Any Penalty and Pre-Deposit due to violation of rules/provision shall be paid and borne by Supplier/Contractor. Also, Supplier/Contractor is responsible to get the goods released from the concerned authority. Delay in supply due to seizure of goods shall attract liquidated damages as per Order / Agreement provisions.

7. PAYMENT

7.1. Subject to the Contractor fulfilling its obligations under the Contract, the Company shall pay to the Contractor the Contract Value as per the terms of the Contract. The Company shall, notwithstanding any provision to the contrary included in the Contract, be entitled to deduct from and/or set off against any amount due or become due, whether related to this contract or other contracts awarded to contractor. However, any and all amounts which the Contractor is liable to pay to the Company, the contractor shall make payment as per the agreed schedule to avoid any set off / deductions.

7.2. Deleted

7.3. The Bills to be submitted by the Contractor shall be in the format approved by the Company. Each Bill submitted by the Contractor under the Contract shall be supported with relevant documents as instructed by the Company from time to time. On receipt of the bill by the Company, the Company shall scrutinize the same to check for any errors and to verify that the amount claimed under the Bill is in conformity with the Contract. The bill shall be payable only after certification of Service(s) and approval of the bill for payment by the Company.

7.4. All monitoring, measurement, billing & payment processes shall be on IT enabled platform of BYPL as per Company's guidelines issued from time to time and bidders to ensure adherence.

7.5. Contractor shall upload correct bills along with all supporting documents in online BTS (Bill Tracking Systems) software or any other IT enabled platform of BYPL as per Company's guidelines issued from time to time for certification / approval purpose and bidders to ensure adherence.

8. TAX INVOICE SUBMISSION PROCEDURE AND CERTIFICATION

8.1. Tax Invoice shall be submitted to the Company for certification. Contractor must pay due attention for submission of Tax Invoice in time and along with relevant Documents to Company.

8.2. Tax Invoice shall be certified by Company after verifying relevant original Documents submitted by Contractor. If original Document associated with Tax Invoice is misplaced or lost during transit or for any genuine reason(s) attributable to Contractor, the reason(s) should be informed to Company in writing in stipulated period as instructed by Company. A true copy of certified Document with an indemnity bond or Bank Guarantee, as the case may be, must be submitted in the format provided by the Company.

8.3. Incomplete Tax Invoice will not be considered for processing of payments in terms of the Contract. Company reserves right to recover payable amount or part of Tax Invoice from available financial security or other dues of the contractor with the Company. Contractor shall be paid in terms of the Contract based on certification of Tax Invoice along with associated relevant Document(s) by the Company only.

9. TIME ESSENCE OF CONTRACT

Time is the essence of the contract and the contractor shall be responsible for performance of his works in accordance with the specified schedule. If at any time, the contractor is falling behind the schedule for reasons attributable to him, he shall take necessary action to make good for such delays by increasing his work force or by working overtime or otherwise to accelerate the progress of the work and to comply with schedule timelines and shall communicate such actions in writing to the company, to the satisfaction of the Company that his action will compensate for the delays. The contractor shall not be allowed any extra compensation for such actions.

Time shall be the essence of the Contractor. Contractor shall complete his work in accordance with the specified time-lines/ Schedules as per the terms of the contract or as may be instructed by the Company from time to time.

10. LIQUIDATED DAMAGE

10.1 In the event of the Contractor's failure to complete the work or any part thereof within the Contract Period including the interim milestone dates, the Contractor shall be liable to pay the Company liquidated damages calculated at the rate of 0.5 % of the contract value per week of delay or part thereof subject to a maximum of 10 (Ten) % of the contract value.

10.2 The Company may, without prejudice to any other method of recovery, deduct the amount of such damages from any monies in its possession, which are due or which may become due to the Contractor. The levy payment or deduction of such damages shall not relieve the

Contractor from his obligation to complete the Works on time or from any other part of his obligation and liabilities under the Contract. Once the maximum is reached, the Company reserves the right for termination of contract without any liabilities to the Company.

10.3 In the event of an extension of time being granted by the EIC, in writing for the Completion of the works, this clause shall be applicable after the expiry of such an extended period.

11. PERIOD OF MOBILISATION

The contractor shall have to mobilize their Plants & Equipments, Tools & Tackles, Work Labour Force, project team including Engineering Staff and materials required for execution of work within seven days (7) of receipt of LOI or Work Order whichever is earlier.

12. SITE OFFICE AND SITE FACILITIES:

The Contractor shall also make his own arrangement for the accommodation/conveyance requirements for its staff. He shall be provided at site the adequate open space for construction of site store for storing the materials, tools, tackles etc. All the Contractor's storage will be within the site premises in a manner affording convenient access for identification and inspection at all times. The storage of arrangements shall be subject to IS: 4082. All the incoming and outgoing materials, equipment, tools, tackles and any other items related to said work shall be entered into the register kept for this purpose and shall be in the safe custody of Contractor, however company does not hold any responsibility for any loss or damage caused to Contractor's material etc.

12.1) The Contractor shall strictly control the labour so that the site is not polluted, made dirty or littered with debris, wastes or the likes.

12.2) Any person, labour found creating mess or litter or pollution shall be removed from the site immediately at the Contractors cost and shall also be subject to penalty at the discretion of the EIC.

12.3) Water & Power:

Water and Electricity Power shall be arranged by the Contractor at his own. It shall be the responsibility of the Contractor to make arrangements at his own expense for supply of water for construction and other uses.

12.4) Watching & Lighting:

The Contractor shall in connection with the works provide and maintain at his own cost all lights, guards, fencing and watching when and where necessary for the protection of works, or for the safety and convenience of the public or others. The care, housekeeping and safety of the materials and works within the works site shall be sole responsibility of the Contractor.

The Contractor shall also open and maintain a site office in the area and depute its authorized representative there.

13. ACCESS TO THE SITE

The Company shall provide to Contractor the right of access to the site progressively for the execution of the works. The Contractor acknowledges that its access to the Site shall not be

exclusive to the Contractor but subject to the restrictions as contained in the Contract as well as the following:

(a) Any public passage or right existing over any part of the Site from time to time;

(b) The rights and obligations of persons or authorities under any Applicable Laws; and

(c) The rights of the Company's Representative, Consultants or any other representative of the Owner or any statutory authorities to have access to the Site for inspection of the Works

If the Contractor foresees any delay in the Execution of the Works due to failure on the part of the Company to provide right of access to the Site, the Contractor shall immediately give written notice to the Company's Representative substantiating its claim for any delay in the execution of the works due to delay in providing the Site. After receipt of such notice, the Company's Representative shall determine extension of time, if any, to be granted to the Contractor and notify the Contractor accordingly. The Contractor acknowledges and agrees that it shall not be entitled to any monetary claim under any circumstances whatsoever due to any delay in handing over of the Site by the Company.

The Contractor shall not demolish, remove or alter any structures or other facilities on the Site without the prior written approval of the Company's Representative. The Contractor shall further ensure that all garbage resulting from the Execution of the Works is removed or disposed of, in accordance with Applicable Laws.

14. INSPECTION & QUALITY CONTROL

Inspection shall be performed by BYPL or its appointed authorized inspection agency. The contractor at his sole expenses shall correct defective works. Such rectification needs to be done / completed within the timelines specified by BYPL.

All materials received at site shall be accompanied by the Test certificate of the manufacturer. The Engineer-In-Charge reserves the right to instruct any material to be further tested in an approved laboratory for which the Contractor shall make no additional claims. Where ever test requirements are not specified in the specifications, relevant IS code of practice shall govern

15. DAMAGE OF PRIVATE PROPERTIES / LIFE:

The Contractor shall be responsible for all risk to the works to be performed under its obligation under the Contract and for trespassers, and shall make good at his own expenses all losses and damages whether to the works, themselves, or to any other property of the company or the lives, persons or property of other forms, whatsoever cause, in connection with the works, although all reasonable and proper precautions may have been taken by the contractor, and in case Company is called upon to make good any such costs, loss or damages or to pay compensation to any person(s) sustaining damages by reason of any act, or any negligence or omission on the part of the Contractor, the amount of any costs or charges (including costs and charges towards legal proceedings) which the Company may incur in reference thereto, shall be charged to the Contractor. The Contractor shall reimburse such costs immediately to the Company.

16. DEMOBILISATION/ HANDOVER ON CONTRACT COMPLETION

16.1. The contractor shall ensure that all the premises/equipment/services are in good working condition and are with full configuration while handing over back to the Company/new Contractor at the end of the contract.

16.2. The demobilization/ handover period will be a period of upto 30 days starting from the date of expiry of the contract. The Contractor shall have to complete the demobilization process including closing all pending calls, and handing over all site-related information to the new Contractor/BYPL during this period.

16.3. Within 30 days of the expiry of the contract, the Contractor's representative and BYPL's representatives or the new Contractor may carry out a Joint survey/physical inspection to identify the status of the premises/equipment/services at their locations. If any of the premises/equipment/services are found non-working/irreparable/unsatisfactory, it is the responsibility of the contractor to make the same good as part of the existing contract.

16.4. No payments shall be admissible for the demobilization period/activities.

16.5. In case the Contractor is not able to close the pending work as identified in Joint survey/physical inspection during the demobilization period, BYPL at its sole discretion can get the work done / Services rendered/ equipment restored/ repaired/substituted by new Contractor/the third party at the risk and cost of the Contractor and the same will be deducted/recovered from the bills of the contractor or the security amount, CPBG, retention amount or otherwise as per terms of the contract and no claim from the Contractor's side, of any nature, including the claim citing the award of work to third party and consequences thereof, shall not be maintainable.

16.6. Payments for the last month shall be cleared only after all the pending works have been closed successfully as indicated above.

16.7. Ceiling on deductions/penalty stipulated in this contract, if any, shall not be applicable on deductions stipulated herein during demobilization/ handover on contract completion.

17. CO-ORDINATION WITH OTHER AGENCIES:

17.1 The Contractor shall execute the work in strict consultation with the Company and in coordination with other agencies appointed by the Company who will also simultaneously execute the components of work allotted to them.

17.2 The Contractor at his own cost shall also extend their site facilities, plant and equipment's on written request of the Company/ EIC for use by other contractors appointed by the Company.

18. REPORTS AND INFORMATION

The Contractor shall be obliged to submit or furnish to Company, all or any information as desired by company, in the form of a report or otherwise. The report may be required at regular interval as specified/required by company. The information shall be provided in a format to be specified by the company to the Contractor. However, company, reserves the right to revise this format which would be communicated to the Contractor and it shall be valid and binding obligation on the Contractor to submit the desired information in the revised format.

19. STATUTORY OBLIGATIONS

The Contractor shall ensure the due compliance of all the applicable statutory acts, including but not limited to the following acts, where special attention of the Contractor is required to be drawn towards the compliance of provision (along with the latest amendments/additions)including any statutory approval required from the Central/State Governments, Ministry of Labour.

a. The Child Labour (Prohibition and Regulation) Act, 1986.
b. The Agreement Labour (Regulation and Abolition) Act, 1970.
c. The Employee's Pension Scheme, 1995.
d. The Employee's Provident Funds and miscellaneous provisions Act, 1952.
e. The Employees State Insurance Act, 1948.
f. The Industrial Disputes Act, 1947.
g. The Maternity Benefit Act 1961.
h. The Minimum Wages Act, 1948.
i. The Payment of Bonus Act, 1965.
j. The Payment of Gratuity Act, 1972.
k. The payment of Wages Act, 1936.
l. The Delhi Shops & Establishment Act, 1954.
m. The Workmen's Compensation Act. 1923.
n. The Company's Liability Act, 1938.
o. The Sexual Harassment of Women at Workplace (Prevention, Prohibition and Redressal) Act, 2013
p. The Delhi Preservation of Trees Act 1994
q. Building and Other Construction Workers Act, 1996 .

Further the Contractor shall be liable to comply with all the amendment in existing acts / upcoming new comprehensive labour acts/codes related to applicable labour laws.

The Contractor shall, prior to commencement of the jobs under this agreement, furnish to the Company the Registration No and Codes of permanent Provident Fund and ESI of its employees.

Contractor shall bear the entire responsibility, liability and risk relating to coverage of its workforce under different statutory regulations including Workmen's Compensation Act, ESI Act, Factories Act 1948, the Agreement Labour (Regulation and Abolition) Act 1970, as amended from time to time, and any other relevant laws/regulations as the case may be. Contractor shall also be solely responsible for the payment of all benefits such as Provident Fund, Bonus, Retrenchment Compensation, leave etc. applicable as per the various statutory laws/regulations and shall keep the Company indemnified in this regard against any claim. The Company shall be entitled to deduct from any money due to or become due to Contractor, any money paid or payable by way of compensation as aforesaid or cost or expenses in connection with any claims thereto and Contractor shall abide by the decision of the Company as regards the sum payable by Contractor under the provisions of this clause

The Contractor shall obtain all registration/permissions licenses etc., which are/may be required under any labour or other legislations for providing the services under this Agreement.

Contractor shall take insurance policy under the Workmen Compensation Act to cover workers, not covered under ESI Act 1948, engaged by it and Accident Liability Insurance for its employees for payment of compensation on account of injury, fatal or otherwise due to accident during service. Copies of these insurance policies will be submitted to company for reference and records and these insurance policies shall be kept valid at all times.

In case it is desired by any Labour authorities to produce the records with respect to salary/ PF/ESI/EDIL/Bonus etc, the said record/register will be made available by the Contractor.

The contractor shall follow all law of the land and prevailing orders issued by various Govt Departments like Dept of Power / DERC/ NGT/Dept of Forest/ Dept of Environment / DPCB / CPCB/ Court orders etc.

20. PENALTY FOR NON-COMPLIANCE OF STATUTORY REGULATIONS

If any non-compliance of any Statutory Obligation is observed then an amount equivalent to 1.5 times the value of the non-compliance will be retained from the outstanding payment bill, however; if non-compliance is continued, a penalty will be levied as follows:

(a) Retained amount will be converted into penalty if Non-compliances are not closed within 60 days.
(b) Termination of agreement in case non-compliances are not cleared after show cause in writing.
(c) The imposition of the penalty is without prejudice to the BYPL's right to terminate the Contract. The closure of the work and final settlement of the contract order shall be effected only after issuance of NOC by BYPL.

21. PENALTY FOR MISCONDUCT/FAILURE IN PERFORMANCE OF TASK UNDER AGREEMENT

21.1.1 The Contractor and its manpower shall adhere all code of conduct/Schedule/SOP/Instructions associated with the task to be performed under the agreement.

21.1.2 During the period of validity/execution of task under agreement, the behaviour of manpower deputed by Contractor shall be entirely professional and shall not commit any misconduct.

21.1.3 BYPL shall conduct audit and quality checks on the activities to be performed by Contractor and/or the personnel deputed by Contractor under Agreement on a periodic basis, to ascertain the overall quality and performance of field activities.

21.1.4 Any complaints received by BYPL either directly from the customer or observations through audit or any other sources shall be reviewed by BYPL. The decision of the committee on the final action on Contractor shall be binding.

21.1.5 PENALTY FOR MISCONDUCT

The penalty to be imposed in case of misconduct shall be as follows:

(a) In case of any misconduct as defined above, a penalty of Rs 5000/- per incident shall be levied.

(b)In case of multiple incidences of Misconduct:

1) 4 complaints per annum OR
2) more than 1 complaint in a quarter

An additional penalty of Rs 20,000/- shall be levied and possible termination of the contract.

21.1.6 The person responsible for such incidence of misconduct must be immediately removed by Contractor from Company's services under the contract and should also never be

deployed for providing any other services to the Company. If needed contractor shall file police FIR against such person.

22. STATUTORY PERMISSION/ APPROVALS

22.1. The Contractor shall take all steps as may be necessary to comply with the various applicable laws/rules including the provisions of agreement labour (Regulation & Abolition Act) 1970 as amended, minimum wages Act, 1984, Workmen Compensation Act, ESI Act, PF Act, Bonus Act and all other applicable laws and rules framed there under including any other statutory compliance/approval required from the Central/State Govt., Ministry of Labour.

22.2. The Contractor must also submit the following before the award of the First Work Order under the agreement and these shall be renewed from time to time:

a) Certificate of registration under Contract labour (R & A) Act 1970.
b) PF Code No. and all employees to have PF A/c No. under PF Act, 1952.
c) All employees to have a temporary or permanent ESI Card as per ESI Act.
d) ESI Registration No.
e) GST registration number
f) PAN No.
g) Electrical License as applicable
f) Labour License under Labour Act (R & A) Act 1970. A copy of Labour License shall be deposited by Contractor with all Engineer-in-charge responsible for execution of the job before start of the work by the contractor, as per guidelines of HR department.)

22.3. The Contractor must follow/adhere/perform the following task:

(a) To take Third party Insurance Policy before start of work.
(b) To follow Minimum Wages Act prevailing in the state.
(c) Salary / Wages to be distributed not later than 7th of each month.
(d) To maintain Wage- cum - Attendance Register.
(e) To maintain First Aid Box at Site.
(f) To Submit Latest P.F. and E.S.I. challans pertaining to the period in which work was undertaken along with a certificate mentioning that P.F. and E.S.I. applicable to all the employees has been deducted and deposited with the Authorities within the time limits specified under the respective Acts.

(g) To frame and adhere the Workmen Compensation Policy in compliance with the law.
(h) To obtain Labour license before start of work.
(i) Registration of Contractors & Contractual Employees under Building &other Construction Worker Welfare Cess Act 1996 & The Building & \other Construction Workers (Regulation of Employment & Conditions of services) Act 1996, as applicable
(j) Registration under “The Delhi Building and other Construction Worker (Regulation of Employment and Conditions of Services) Rules2002 (B.O.C.W.)”, as applicable

Before commencing the work it would be mandatory for the Contractor to furnish the Company the permanent PF code no and ESI of the employees.

22.4. Contractor ensures that Manpower deployed at the site must adhere to terms & conditions as set out in the Contract.

22.5. The Contractor shall give a written declaration / undertaking along with the bills that he has complied with the following:
a) Has paid minimum wages to his manpower along with its proof.
b)Deduct and deposited ESI/PF contribution. Copy of the same shall be submitted

22.6. Contractor shall comply with all the amendments to existing acts, upcoming new comprehensive labour acts related to applicable labour law, wage code etc

23. PERMITS, LICENSES&APPROVALS

23.1. It shall be the Contractor's exclusive responsibility to obtain all requisite approvals, permits or licenses required for the performance of the Services. However, upon the request of the Contractor, the Company may, where it is necessary to do so, provide reasonable assistance to the Contractor, at the risk and cost of the Contractor, in applying for and obtaining such permits, licenses or approvals. Any delay in obtaining any such permits, licenses and approvals shall not relieve the Contractor from any of its obligations under the Contract.

23.2. The cost of obtaining the above mentioned permits, approvals and licenses and follow-up of the applications for such permits, approvals and licenses shall be borne by the Contractor.

23.3. It shall also be the Contractor's exclusive responsibility to obtain those requisite approvals, permits or licenses required for the performance of the Services which needs to be obtained by the Company. However, the cost of obtaining such permits, approvals and licenses shall be borne by the Company. Company shall provide reasonable assistance to the Contractor in applying for and obtaining such permits, licenses or approvals. Any delay in obtaining any such permits, licenses and approvals shall not relieve the Contractor from any of its obligations under the Contract.

24. REPRESENTATION, WARRANTIES AND GUARANTEES

The Contractor hereby represents warrants and guarantees that:

24.1. It is a legally recognized entity under the laws of India;

24.2. The Agreement contains valid and binding obligations and is enforceable in accordance with the terms hereof;

24.3. It has studied the technical feasibility, Site conditions and other prevailing conditions and all other operational details and based on these studies carried out, has agreed to provide to the Company the services as contemplated in this Agreement;

24.4. It has appraised itself of all applicable rules and regulations, and shall at all times comply with such rules and regulations;

24.5. It shall procure/hire vehicles and hire manpower suitable for the purposes of rendering services as contemplated in this agreement;

24.6. The Services would be conducted in a safe and efficient manner at the Site and at all times in compliance with Good Industry Practices and requirements of the Company, and in any event, in accordance to this Work Order/agreement;

24.7. It shall procure all consents, licenses, permits, approvals and certificates and authorizations as may be required from any governmental authority for the performance of services at the Site;

24.8. It shall duly pay the duties, taxes and levies as are set out in this agreement or otherwise, which are to be paid by the Contractor;

24.9. There is no action, suit or proceeding, at law or in equity, or to the best of knowledge of Contractor, any official investigation before or by any governmental authority, arbitration tribunal or other body pending or, to the best of its knowledge, threatened against or affecting it or any of its property, rights or assets, which could reasonably be expected to have material adverse effect on its ability to perform its obligations under this Agreement or on the validity or enforceability of this agreement;

25. EVENTS OF DEFAULTS

Company may, without prejudice to any of its other rights or remedies under the Contract or in law, terminate the whole or any part of this Contract by giving written notice to the Contractor, if in the opinion of Company, contractor has neglected to proceed with the Contracts with due diligence or commits a breach of any of the provisions of this Contract including but not limited to any of the following cases:

25.1 Failing to complete execution of Contract as per the terms and conditions specified in the Contract.

25.2 Failing to complete Contracts in accordance with the approved schedule of Contract.

25.3 Failing to comply with any reasonable instructions or orders issued by Company in connection with the Contract.

25.4 Failing to comply with any of the terms or conditions of this Contract.

25.5 In the event Company terminates this Contract, in whole or in part, on the occurrence of any event of default, Company reserves the right to engage any other vendor or agency to complete the Contract or any part thereof, and in addition to any other right Company may have under the Contract or in law including without limitation, including the right to penalize for delay under clause “Liquidated Damage” of this Contract , the contractor shall be liable to Company for any additional costs that may be suffered/borne by Company for the execution of the Contract.

25.6 Failure on the part of the Contractor to maintain its confidentiality obligations and or compromising its integrity, which are required to be of highest standards, in so far as the present scope of work is concerned.

26. RISK & COST

If the contractor fails to execute the work as per specification/agreement/as per the direction of Engineer-in-change within the scheduled period and/or even after the extended period, the company shall be having the right to cancel/terminate the agreement and the company reserves the right to get the work executed from any other source at the Risk & Cost of the Contractor. The Extra Expenditure so incurred shall be debited to/recovered from the contractor.

27. LIMITATION OF LIABILITY

27.1. The contractor's liability (except Third Party Liability; covered under the agreement and addendums thereto) for all damages, losses, acts or omissions, how soever occasioned, shall not, at any time exceed an amount equivalent to Contract Value.

27.2. Notwithstanding anything stated in the agreement, the limitation of Liability shall not be available/applicable in case of wilful default/breach/negligent act/misconduct on the part of the contractor and/or its employees.

28. TERMINATION

28.1. TERMINATION BY COMPANY FOR NON-PERFORMANCE

During the course of the execution, if at any time the Company observe and forms an opinion that the work under the order is not being performed satisfactory and the performance of the contractor not found satisfactory, the company reserves its right to cancel/ terminate this agreement giving minimum 30 days' notice without assigning any reason and the Company will recover all damages including losses occurred due to loss of time from the Contractor. After termination of the agreement, the Contractor shall immediately stop all activities related to the work terminated. This is without prejudice to other rights under the terms of contract. The contractor shall hand over all drawing/documents prepared for this contract up to the date of cancellation of order to BYPL.

28.2. PREMATURE TERMINATION

The order can be terminated by the company before the expiry of its term under the following conditions:

(i) The Contractor repudiates this order or otherwise evidences intention not to be bound by this order;
(ii) The Contractor assigns, mortgages, or charges or purports to assign, mortgage, or charge any of its obligations or rights in contravention to the provisions of this order; or, transfers or negates any of its obligations in contravention to the provisions of this order.
(iii) The Contractor breaches the Secrecy/Non-disclosure Clause/Confidentiality obligations.
(iv) If at any stage during the tenure of the work order, Contractor is found to be involved or indulging or even attempting illegal, unlawful action or activities or some fraudulent or even trying to take or ask bribe from any customer or to give bribe official/staff or misuse or abuse any meter or property of the Company.

(v) The Company shall be entitled to deduct from any money due or to becomes due to the Contractor, money paid or payable by way of compensation as aforesaid or cost or expenses in connection with any claims there to. The Contractor shall abide by the decision of the Company as to the amount payable by the Contractor under the provision of this clause.

28.3. TERMINATION BY COMPANY FOR CONVENIENCE

The Company shall, in addition to any other right enabling it to terminate the Contract, have the right to terminate the Contract at any time without assigning any reason, by giving a written notice of minimum 30 days to the Contractor. The Contract shall stand terminated on the date as per the notice but such termination shall be without prejudice to the rights of the Parties accrued on and before the date of termination.

29. GOVERNING LAW AND ARBITRATION

29.1. Governing Law: This Work Order/Agreement shall be governed by the laws of India and each party submits to the exclusive jurisdiction of the courts in New Delhi.

29.2. Dispute Resolution Mechanism. All disputes and differences arising out of or in connection with this Agreement shall be resolved amicably by mutual discussion within 30 days. If the dispute cannot be resolved by mutual discussions and agreement, the parties will take such dispute to an arbitral panel comprising Sole Arbitrator jointly appointed by the parties to agreement.

29.3. In the event parties fail to appoint the sole arbitrator within 30 days from the date of request made by party, the Sole Arbitrator shall be appointed as per the provisions of The Arbitration and Conciliation Act 1996 as amended upto date. The arbitration shall be conducted in New Delhi in accordance with the provisions of the Arbitration and Conciliation Act 1996. The award of the arbitral panel shall be final and binding on all parties. The arbitration proceedings shall be conducted in English. The venue and seat of Arbitration shall be in Delhi Only. The cost of arbitration shall be shared equally between the parties unless otherwise directed by the Arbitrator.

30. FORCE MAJEURE

30.1. General

An "Event of Force Majeure" shall mean any event or circumstance not within the reasonable control, of the Party affected, but only if and to the extent that:

(i) Such event or circumstance, despite the exercise of reasonable diligence, could not have been prevented, avoided or reasonably foreseen by such Party;

(ii) Such event or circumstance materially and adversely affects the ability of the affected Party to perform its obligations under this agreement, and the affected Party has taken all reasonable precautions, due care and reasonable alternative measures in order to prevent or avoid the effect of such event on the affected party's ability to perform its obligations under this Agreement and to mitigate the consequences thereof. For the avoidance of doubt, if such event or circumstance would not have materially and adversely affected the performance of the affected party had such affected party followed

good industry practice, such event or circumstance shall not constitute force majeure.

(iii) Such event is not the direct or indirect result of the failure of such Party to perform any of its obligations under this Agreement; and

(iv) Such Party has given the other Party prompt notice describing such events, the effect thereof and the actions being taken in order to comply the relevant clause

30.2. Specific Events of Force Majeure

Subject to the provisions of the agreement, Events of Force Majeure shall include only the following to the extent that they or their consequences satisfy the above requirements:

(i) The following events and circumstances:
   a. Effect of any natural element or other acts of God, including but not limited to storm, flood, earthquake, lightning, cyclone, landslides or other natural disasters, and\
   b. Explosions or fires or flood

(ii) Public disorder, insurrection, rebellion, sabotage, riots or violent demonstrations of a local character;

(iii) Declaration of the Site as war zone.

(iv) Any order, regulation, directive, requirement from any Governmental, legislative, executive or judicial authority.

30.3. Notice of Events of Force Majeure

If a force majeure event prevents a party from performing any obligations under the Agreement in part or in full, that party shall:

(i) Immediately notify the other party in writing of the force majeure events within 2 working days of the occurrence of the force majeure event

(ii) Be entitled to suspend performance of the obligation under the Agreement which is affected by force majeure event for the duration of the force majeure event

(iii) Use all reasonable efforts to resume full performance of the obligation as soon as practicable

(iv) Keep the other party informed of all such efforts to resume full performance of the obligation on a regular basis

(v) Provide prompt notice of the resumption of full performance or obligation to the other party.

30.4. Mitigation of Events of Force Majeure

The Contractor shall:

(i) Make all reasonable efforts to prevent and reduce to a minimum and mitigate the effect of any delay occasioned by an Event of Force Majeure, including applying other ways in which to perform the agreement;

(ii) Use its best efforts to ensure resumption of normal performance after the termination of any Event of Force Majeure and shall perform its obligations to the maximum extent practicable as agreed between the Parties; and

(iii) Keep the Company informed at regular intervals of the circumstances concerning the event of Force Majeure, with best estimates as to its likely continuation and what measures or contingency planning it is taking to mitigate and or terminate the Event of Force Majeure.

30.5. Burden of Proof

In the event that the Parties are unable in good faith to agree that a Force Majeure event has occurred to an affected party, the parties shall resolve their dispute in accordance

with the provisions of this agreement. The burden of proof as to whether or not a force majeure event has occurred shall be upon the party claiming that the force majeure event has occurred and that it is the affected party.

30.6. Termination for Certain Events Of Force Majeure

If any obligation of any Party under the Agreement is or is reasonably expected to be delayed or prevented by a Force Majeure event for a continuous period of more than 1 (one) month during the Term of the Agreement, the Agreement shall be terminated at the discretion of the Company and neither Party shall be liable to the other for any consequences arising on account of such termination.

The Company reserves the right to demand the Contractor's services on holidays as well as beyond the normal working hours.

The Contractor will ensure that none of their person is engaged in any unlawful activities subversive of the Company's interest failing which suitable action may be taken against the Contractor as per the terms and condition of this order.

The Contractor shall be liable for payment of all taxes and duties as applicable, to the State/ Central Govt. or any local authority.

The Contractor's employees shall not be treated as Company's employees / persons for any purpose whatsoever & facilities/ benefits applicable to the Company's employees shall not be applicable to Contractor's employees. If due to any reasons whatsoever the Company is made liable to meet any obligation under any of the laws & enactment etc, for any reason whatsoever the same shall be recovered from the Contractor either from the present and future amount payable to him oras per law.

31. NOTICE & COMMUNICATION

Any notice or other formal communication to be given under this agreement shall be in writing and signed by or on behalf of the party giving it and shall be sent by registered post, A.D. to the addresses of Contractor or BYPL as mentioned herein above or to any other addresses as agreed by the parties, in writing from time to time.

Any notice or other formal communication can also be sent through official e-mail ID of authorized person of Contractor or BYPL.

32. SAFETY CODE

32.1. The Contractor shall ensure adequate safety precautions at site, as required under the law of the land to facilitate safe working, during the execution of work under agreement/work order and shall be entirely responsible for the complete safety of their workmen as well as other workers at site and premises during performance of work under agreement.

32.2. The Contractor shall observe the safety requirements as laid down in the agreement and in case of sub-contract/assignment (only after written approval of company), it shall be the responsibility of Contractor that all safety requirements are followed by the employees and staff of the sub-contractor.

32.3. The Contractor employing two hundred employees or more, including employees deputed under agreement, shall have a safety officer in order to ensure the implementation of safety requirements of the agreement and if the Contractor having lesser number of employees, including agreement workers, shall nominate one of its employees to act as safety coordinator who shall liaise with the safety officer on matters relating to safety and his name shall be displayed on the notice board at a prominent place at the work site.

32.4. The Contractor shall be responsible for non-compliance of the safety measures, implications, injuries, fatalities and compensation arising out of such situations or incidents.

32.5. In case of any accident, the Contractor shall immediately submit a statement of the same with BYPL and the safety officer, containing the details of the accident, any injury or causalities, extent of properly damage and remedial action taken to prevent recurrence and in addition, the Contractor shall submit a monthly statement of the accidents to BYPL at the end of each month.

32.6. The contractor / safety officer shall be responsible for providing training to all staff & workers, safety compliances, testing and fitness of all T&P, PPE, annual safety audit reports etc in line with CEA norms

33. WORKMEN COMPENSATION

33.1. The Contactor shall take insurance policy at his own cost under the Workmen Compensation Act to cover such workers who are not covered under ESI by the Contractor however engaged to undertake the jobs covered under this order and a copy of this insurance policy will be given to Company for reference and records. This insurance policy shall be kept valid at all times. In case there are no workers involve other than those who are covered under ESI by the Contractor, the Contractor shall certify for the same.

33.2. The Contractor shall keep the Company indemnified at all times, against all claims of compensation under the provisions of Workmen Compensation Act 1923 as amended from time to time or any compensation payable under any other law for the time being involving workmen engaged by the Contractor in carrying out the job involved and against costs and expenses, if any, incurred by the Company in connection therewith and without prejudice to make any recovery.

33.3. The Company shall be entitled to deduct from any money due to or to become due to the Contractor, moneys paid or payable by way of compensation as aforesaid or cost or expenses in connection with any claims thereto and the Contractor shall abide by the decision of the Company as to the amount payable by the Contractor under the provisions of this clause.

34. THIRD PARTY INSURANCE

The Contractor shall, before the commencement of work, take a Third-Party Insurance of an adequate value, at his own cost and expenses, securing all the risks/losses/damages which may be caused to any third party and/or BYPL and/or its employees/associates, because of the omission/performance of tasks by the Contractor under this agreement. The full and final settlement of claims raised by third parties shall be the sole responsibility of the Contractor without any liability to BYPL.

It is further agreed by the Contractor that in case of defect/damage to the system because

of default on the part of the Contractor, the Contractor shall, at its own cost, be liable to replace/rectify the same at the earliest or make good the loss suffered by BYPL

35. HUMAN RESOURCE ISSUES

(A) The Contractor would execute the works under agreement through its own resources.

(B) The Contractor shall bear all expenses/cost to be incurred towards salary, allowances, perks, travelling allowances, advances, insurance, safety measures, annual increment, security, transportation, conveyance reimbursement, telephone expenses, leave pay and all other misc. expenses etc. of their employees/ workmen during the validity/tenure of the Agreement or any renewed tenure thereto. Also, the Contractor shall be solely responsible for making payment for Hospitalization, Compensation thereof in case of any accident & injury.

(C) The Contractor to deploy its manpower immediately for carrying out the work as specified in the tender document.

(D) The Contractor shall ensure that there are no disputes regarding service, payment etc. of the persons engaged by it, anytime during the tenure/validity of the contract. At no point of time during the tenure/validity of contract, the Contractor's employees shall insist upon the Company for employment, wages, and allowances or any other related matter, payment etc.

(E) The Contractor shall not deploy the manpower below the age of 18 years or above the age of 58.

(F) The Contractor shall not deploy the female manpower between 7 PM to 6 AM.

(G) The Contractor shall be directly responsible for any / all disputes arising between Contractor and its persons and keep the Company indemnified against all losses, damages and claims arising thereof. The Contractor shall resolve all disputes of its manpower. All the legal dues of the manpower of Contractor is to be paid on or before due date as per applicable laws or within 8 days from date of the termination of manpower.

(H) All safety wears required for the Contractor's manpower during the execution of work must be provided by the Contractor at its own cost and the Contractor shall ensure that its employees regularly use such safety gears.

(I) The Contractor shall be responsible for discipline of its manpower and shall ensure that the personnel deputed should adhere to the disciplinary procedure set by the Company. The Contractor shall ensure that none of its associate/personnel is engaged in any unlawful activities or any other activity subversive of the Company's interest, failing which the same shall be termed as breach of the terms of agreement and annexures thereto and suitable action may be taken against the Contractor as per the terms & conditions of the Agreement. The Contractor will ensure that none of the manpower engaged by it will demonstrate before the offices of the Company in any manner whatsoever. In case any of the manpower engaged by Contractor is found indulging in such activities, the same shall be termed as breach of the terms of agreement and annexure thereto and the Contractor will take suitable action against such of their employees and submit the ATR with company.

(J) The Contractor shall ensure compliance with minimum wage requirements of the correct category and shall ensure the following:

(a) Timely payment of minimum wages to deployed manpower as per the rate notified

from time to time by the Government of National Capital Territory of Delhi.

(b) Compliance with all other relevant PF, ESI, Insurance and other laws as applicable per statute.

(c) To retain Challans/Receipt issued by Statutory Authorities like Regional Provident Fund Commissioner (RPFC)/including its own Pension Provident Fund Trust for previous month & proof of payment towards compliance of other statutory provisions like E.S.I., GST etc.

(d) Contractor will also produce challan/receipt with respect to payment of GST as a proof for such statutory payment.

(K) Contractor shall comply with provisions of the Payment of Wages Act 1936, Minimum wages Act-1948, Employee's Provident Fund & Miscellaneous Provision Act 1952, ESI Act 1948, Company's Liability Act 1936, Industrial Dispute Act 1947, Maternity Benefit Act 1961, Contract Labour (Regulations & abolition) Act 1970, Delhi Shops & Establishment Act or any modification thereof, THE SEXUAL HARASSMENT OF WOMEN AT WORKPLACE (PREVENTION, PROHIBITION AND REDRESSAL) ACT, 2013 or any other Act relating to rules made hereunder from time to time. For the said purpose the Contractor shall get itself covered under the Employee's Provident Fund & Miscellaneous provision Fund 1952&ESI directly with the appropriate Regional Provident Fund Commissioner, if not done so far and shall intimate to the Company the Code No. allotted by the RPFC&ESI Authorities within one month from the date of commencement of the work under agreement.

(L) Contractor shall organize periodic awareness session on POSH, 2013 and strict compliance to POSH, 2013.

(M) Contractor shall have a detailed HR policy for retirement, training, safety, job suitability, health etc. for it's employees. Further the Contractor shall have proper grievance redressal process for addressing HR issues raised by it's employees.

36. DEPLOYMENT OF RESOURCES

36.1. The contractor shall deploy adequate resources for the smooth execution of work assigned to them. The contractor shall provide complete details including name, address, and Aadhar Card number of resource deployed.

36.2. The contractor shall deploy qualified & experienced resources comprising engineers, supervisors, diploma holders, skilled, semi-skilled & unskilled staff in accordance with the requirements.

36.3. The resource deployed by the contractor shall exercise highest level of integrity at work place and shall not involve in any type of malpractice. In case any resource of the contractor is found involved in any malpractice, the contractor shall indemnify the company for the loss incurred by the company on account of such malpractice/misconduct.

36.4. In case the contractor or the resource deployed by him unable to execute the work assigned to it as per satisfaction of the company or the workmen of the Contractor refuses to work, going on strike or for any other reason likely to lead to loss of productivity, the company shall have right of engaging any other agency or resorting to any other suitable means without giving any reason and to recover the cost incurred out of the amount payable or become due to the contractor.

37. REPLACEMENT OF RESOURCE(S)

37.1. Should the Company consider at its sole judgment that the persons deployed by the Contractor are not suitable for the job for whatsoever reason, the Company will have the option either (i) to seek prompt replacement deputing the other person at the cost of Contractor or (ii) to terminate this work order/agreement in part or as a whole.

37.2. If the Company finds any employee of the Contractor guilty of any misconduct, incompetence or negligence, the Contractor shall, if so intimated by the Company, withdraw such employee from the work of company and replace him with a qualified and competent manpower. Contractor shall keep the Company informed of all manpower replacements and all such data shall be submitted with the person nominated by Company along with personal & qualification details of such persons deputed as replacement.

37.3. If any employee of the Contractor found indulged in unfair practices or causing direct or indirect damage to Company's Image/Property/Revenue, immediate action shall be taken by the Contractor and the Contractor shall suitably compensate the company for all loss incurred by the Company. Contractor shall have retrenchment / removal policy in place to handle such matters.

38. CONTRACTOR'S OBLIGATIONS

A) General Obligations

38.1 The performance of Services as completed by the Contractor shall be wholly in accordance with the Contract and fit for the purposes for which they are intended to and as defined in the Contract. The Services shall include any Service which is necessary to satisfy the Company's requirements and as implied by the Contract.

38.2 The Contractor shall execute the Services within the time frame for completion as specified in the order/agreement and Scope of Work. Without prejudice to the provisions of the Contract, before commencing the Services, the Contractor shall satisfy itself regarding the BYPL's requirements. The Contractor shall give notice to BYPL, within forty-eight (48) hours of the receipt of BYPL's requirements, of any error, fault or other defect in the BYPL's requirements or such items of reference.

38.3 The Contractor takes full responsibility for the adequacy and stability of Services to be performed at the Site.

38.4 The Contractor shall at all times endeavour to adopt best practices as is prevalent in like industry and shall always be required to achieve the desired quality and confirm to the schedule of Service(s) at no additional cost to the company/BYPL.

38.5 The Contractor is deemed to have satisfied itself as to the correctness and sufficiency of the BYPL's requirements and other terms of the Contract relating to its risks, liabilities and obligations set out in or implied by the Contract and all matters and things necessary for the proper performance of the Services.

38.6 The Contractor acknowledges the responsibility of the following during the performance of the Services:

(a) The proper transportation of Manpower and materials upto the Site and back.
(b) Availability of skilled Manpower in time.

(c) Compliance with the HSE Conditions and adherence to Contractual terms;
(d) Protection of the environment and adjacent structures and taking steps for remedying any damage caused to the environment or adjacent structures during the performance of the Services by the Manpower.

38.7 The Contractor shall, whenever required by the BYPL, submit details of the arrangement and methods which the Contractor proposes to adopt for the performance of the Services. No alteration to these arrangements or methods shall be made without the approval of BYPL.

38.8 Train its Manpower in the manner as reflected in their training manual, requirements of BYPL and as per the best industry practice before the deployment at the Site. Contractor shall maintain training records. Contractor ensures to replace Manpower of same specification in order to reliever / absenteeism of Manpower.

38.9 In case the Contractor comes across with any ambiguity and/ or discrepancy in the BYPL's requirements, it shall immediately Communicate such ambiguity and/ or discrepancy to BYPL, for seeking appropriate instructions to resolve such ambiguities and discrepancies.

38.10 Contractor to maintain sufficient cash flow as working capital to meet daily expenses for the Manpower.

38.11 Contractor to coordinate and maintain close liaison with local police and administrators. Contractor to visit Site periodically and as per specific request of Company/BYPL.

38.12 Notwithstanding anything contrary in the Contract, Contractor must make judicious and economical use of resources of the company/BYPL at the Site, including, but not limited to resources such as space, water and electricity. In the opinion BYPL discover the misuse of resources by the Manpower, after serving notice to the Contractor if Contractor fails to adhere to this Article, BYPL reserves right to recover a suitable amount as per BYPL discretion. BYPL decision in this regard shall be final & binding.

38.13 The Contractor shall not use the name of the company/BYPL in any manner for credit arrangement or otherwise and it is agreed that the company/BYPL shall not in any way be responsible for any debts, liabilities or obligations of the Contractor or its Manpower.

38.14 In case, if the company/BYPL is of the opinion, after due consultation with the Contractor, that extra Manpower or material / equipment is/are required for reasons of improving the quality and nature of Services at the Site, the Contractor shall arrange for the same timely at the same price specified in the Contract.

38.15 Contractor to ensure that the Manpower deployed should have bank account which their payment must be directly credited to their bank account by the Contractor. The Contractor shall submit the copy of its instructions to the bank to transfer the salary / wages to the account of its Manpower deputed under the contract to the company/BYPL on or before 7th day of every month for the previous month's salary transfer of individual Manpower to their bank.

38.16 Contractor to maintain list of Manpower in shifts and attendance muster at the Site entrance for Manpower deployed under the Contract.

38.17 Staff working hours will be governed by the Factories Act and Applicable Law as per State where Site is located and Manpower have been deployed.

38.18 Contractor must ensure that child labour is not to be deployed at the Site.

38.19 A detailed Site specific deployment chart shall be submitted by the Contractor to Company within 5 working days before commencement of Services.

38.20 Contractor must ensure to conduct at least bi-weekly surprise checking at Site where their Manpower is deployed and performing Services to ascertain performance as per Contract. Contractor shall provide adequate quick response team and surveillance team for this purpose

38.21 Contractor shall develop its own network and arrangements and shall be solely responsible to recruit its own personnel for providing Services.

38.22 In case of accident of whatsoever nature at the Site where the Manpower is injured or dies, it would be the sole responsibility of the Contractor without any risk and cost of the BYPL.

38.23 Contractor to submit documents related to Manpower along with Contractor's organisation chart, authorised signatories & etc., before commencement of Services under the Contract.

38.24 In case death, injury to any Manpower of the Contractor, Contractor is sole responsible under Workmen Compensation Act and any other Applicable Law. Contractor must not violate any statutory provisions / Applicable Lawand shall keep BYPL indemnified, in full, from any claim associated with injury/death to its employee deployed under the agreement. Contractor to compliant with all Applicable Laws. Any breach in statue / Applicable Law , BYPL reserves right to recover reasonable compensation at the discretionary of BYPL.

B) Compliance with Applicable Laws by Contractor

38.25 The Contractor shall fully familiarize itself and conform in all aspects with all Applicable Laws. The Contractor shall be bound to give all notices, file all returns, etc., required by Applicable Laws, as aforesaid and to pay all fees and charges in respect thereof. Contractor must have experienced manpower with knowledge to handle all statutory compliance related matters

38.26 The Contractor shall not be absolved from any of its obligations under Applicable Laws or the Contract or claim any additional amount from the Company/BYPL or seek any extension of time due to its ignorance of any Applicable Law.

38.27 The Contractor shall indemnify the company/BYPL against all costs, expenses, penalties and liabilities incurred/ suffered by any of the Company due to non-compliance of any Applicable Law by the Contractor in relation to the performance of the Services.

38.28 Contractor is required to obtain requisite license issued by the licensing officer/competent authority in the Government office before commencement of Services.

38.29 Contractor shall ensure that it remains in compliance with Applicable Laws at all times and maintained registers and records with all particulars as may be specified in the

Applicable Laws.

38.30 Payment of gratuity (if any) to Manpower will be sole responsibility of the Contractor.

38.31 Contractor to submit details of payments made to PF and ESIC authorities with a list of Manpower deployed at the Site with copy of deposit challans. List of Manpower with PF and ESIC numbers to maintained up to date by Contractor and if required to be shared with BYPL.

C) Contractor's Other Obligations

38.32 The Contractor shall also provide the necessary proof of remittances of EPF, Pension amount and ESIC for the previous month, along with their invoices for the current month to Company. Without such proof, the invoices will not be processed for payment.

38.33 The employees deployed by the Contractor shall be employees of the Contractor.

38.34 At no point in time shall any employee of the Contractor claim to be the employee of the Company.

38.35 The Contractor is committed to recruit and provide qualified, experienced, well-trained, physically & mentally fit personnel in accordance with the Company's standard, duly verified by the local police Station as regards their antecedents and backgrounds.

38.36 The Contractor shall ensure that, the Contractor's manpower deployed at the Company shall be in good health, shall have proper eyesight and shall not have any medical problems which may endanger his life and the life of the other Company employees appointed at the said location. The Contractor shall ensure that, the Contractor's personnel deployed at the Company shall be entirely responsible for the stock of the commodities stored at the said location. To ensure such safety, the Contractor shall, before deploying any employee in the premises, shall have him medically examined by a registered medical practitioner at its own cost and expenses and produce a medical certificate certifying that the said employee is medically fit.It is further agreed that without such medical certificate, Company shall not permit any such Contractor's personnel to work in its premises. It is further agreed that Company may, from time to time, call upon the Contractor to have all or any of its Contractor's personnel examined.

38.37 The Contractor shall fully guide, supervise and monitor the Contractor's manpower deployed in Company locations by its Supervisors.

38.38 Supervisors will inspect every location at least once every 15 days during day/night to check the level of control exercised by Contractor's personnel. The Supervisors will take digital photographs of Contractor's personnel in the location during their inspection. The photographs will contain date and time stamp to identify the date the photographs are taken and send the photographs to Company along with their inspection report on weekly basis.

38.39 The Contractor undertakes to provide required resources to maintain desired service level. In case of any failure in services due to paucity of resources, BYPL shall be within its rights to make necessary deductions in addition to such rights as available under contract.

38.40 TIMELY DISBURSEMENT OF WAGES

The Contractor shall ensure that monthly wages/salary disbursed to its manpower timely but not later than 7th of each month. Though the company endeavours to process Contractor's bills on time as per the payment timelines mentioned in agreement (payment terms), under no circumstances delay in disbursement of wages shall be acceptable, it is the Contractor's responsibility to ensure the same, accordingly the bidders are expected to quote their rates to fulfil their obligations towards the timely disbursal of wages and all other benefits including PF/ESI/Bonus/leave pay/allowances etc.

It may please be noted that BYPL reserves the right to terminate the agreement in case of second or subsequent repeated instances of delay in disbursal of the wages.

39. THE COMPANY/BYPL'S OBLIGATIONS/RESPONSIBILITIES

39.1 BYPL may check the competencies of the manpower for the work for which they are deputed to ensure that requisite skill and competency levels are being met with by the Contractor.

39.2 BYPL shall not exercise direct control (including matters of payments, discipline and removal/termination) and supervision over the Contract Manpower and that shall be done by the Contractor. However, BYPL shall have a right to assess the abilities and skills of the Manpower deployed by the Contractor to ensure the quality of Service provided under the Contract, without actually managing or directing such Contract Manpower.

39.3 The contractor shall ensure to maintain the registers like muster roll, wage register, etc., and shall share the copy of the same with BYPL as and when demanded,

39.4 The Company/BYPL reserves the right to engage other party(ies) to perform similar or identical Services to be performed by Contractor under this Contract / Agreement for which Contractor shall not have any objections.

40. INDEMNITY

The Contractor shall indemnity, defend, save and hold harmless all directors, company and its employees against any and all suits, proceedings, actions, demands and third party claims for any loss, damage, cost and expense suffered by company on account of the negligence, act or omission inaction by the Contractor or its employees under this Agreement. Agencies shall also wholly indemnity and compensate company against any theft, misappropriation, fraudulent act or omission, any collusion with customer/s, intentional recording of incorrect reading/DATA, or any other offence under the applicable laws or breach of obligation under the present agreement, and would also render itself liable to appropriate legal action being initiated against it by company.

The Contractor shall also be responsible and liable to company for any loss or damage caused to company for any negligence or inaction, damage to the property of company caused by the Contractor or its employees.

41. SECRECY & CONFIDENTIALITY

41.1 The technical information, data and other related documents forming part of order and the information obtained during the course of investigation under this order shall be the Company's exclusive property and shall not be used for any other purpose except for the

execution of the order. The technical information drawing, records and other document shall not be copied, transferred, or divulged and/or disclosed to third party in full/part, not misused in any form whatsoever except to the extent for the execution of this order.

41.2 These technical information, drawing and other related documents shall be returned to the Company with all approved copies and duplicates including data/drawing/plans as are prepared by the Contractor during the executions of this order, if any, immediately after they have been used for agreed purpose.

41.3 In the event of any breach of this provision, the Contractor shall indemnify the Company against any loss, cost or damage or claim by any party in respect of such breach.

41.4 The Contractor shall not use the name/logo/emblem of the Company in any manner either for credit arrangement or otherwise and it is agreed that the Company shall not in any way be responsible for the debts, liabilities or obligations of the Contractor and/or his employees.

41.5 The Contractor hereby covenant that the Contractor shall be responsible for theft, if any committed, by his staff and the Contractor shall indemnify Company from and against all claims, demands, actions, suits and proceedings, whatsoever that may be brought or made against the Company by or on behalf of any person, body, authority whatsoever and whomsoever and all duties, penalties, levies, taxes, losses, damages, costs, charges and expenses and all other liabilities of whatsoever nature which the Company may be liable to pay, incur or sustain by virtue of or as a result of the performance or non- performance or observance or non- observance by the Contractor of any of the terms and conditions of this agreement. The Company shall have full power and rights at its discretion to pay or defend or compromise any suits, claims or demands brought or made, whether pending or threatened touching upon this agreement as it may consider necessary or desirable and shall be entitled to recover from the Contractor all sums of money including all legal costs, charges and expenses incurred by virtue of any such compromises which shall not be called into question by the Contractor but shall be final and binding on the Contractor.

41.6 Contractor shall submit signed NDA as per the format 4.3 attached.

42. NON-EXCLUSIVITY

The award of the work order/agreement to the Contractor shall not preclude the Company from awarding the same order for similar work at the same rates, or on any terms and conditions to other party or parties. The Company at its discretion may place the order on any other party.

43. SEVERABILITY

If any provision of this Agreement is or becomes invalid or unenforceable by the courts of any jurisdiction to which it is subject, such invalidity or unenforceability shall not prejudice the remaining provisions of this Agreement, which shall continue in full force and effect.

44. ASSIGNMENT&SUBLETTING

The Contractor shall not, without company's prior consent in writing assign or sublet or transfer any portion of services awarded to the Contractor as envisaged herein and falling under this contract. Moreover, any such consent shall not relieve the Contractor from any

obligation, responsibility, or duty under this Contract.

45. ASSIGNMENT BY THE COMPANY

The rights and obligations of BYPL under the Contract shall be assignable to Affiliates, associate company, joint venture or any other company including change in Management Control and BYPL's lenders without consent of the Contractor. Upon written notice of seven Business Days (07 days) by BYPL, the Contract shall be deemed to have been assigned to the third party under this Article. This Article fulfils its meaning notwithstanding the notice is not accepted by the Contractor and BYPL shall not be obliged to the Contractor after seven days (07) of issue of any further notice.

46. DELETED

47. WAIVER OF RIGHTS

No delay or forbearance by company in exercising any right or power under this Agreement shall be construed as a waiver of such right or power, nor shall any single or partial exercise of such right or power preclude any further exercise of such right of power.

48. THE COMPANY'S RIGHT TO VARY QUANTITIES

The Company reserves the right to vary the quantity i.e. increase or decrease the Numbers/ quantities without any change in terms and conditions during the execution of the Order. BYPL may increase or reduce the area/ scale of operations after starting of execution of the contract and the size of contract may be adjusted accordingly.

49. CONTRACTOR'S EQUIPMENT

49.1. All Contractor's Equipment and Temporary Works provided by the Contractor or any permitted Subcontractor, shall, when brought on to the Site, be deemed to be exclusively intended for execution of the Works and not be removed without the consent, in writing, of the Company's Representative.

49.2. Upon completion of the Works, the Contractor/permitted Subcontractor shall remove from the Site, all its Equipment and Temporary Works and its unused materials.

49.3. The Company shall not at any time be liable for the loss or damage to any of the constructional plant, Temporary Works or materials.

49.4. The Contractor shall, upon written request by the Company's Representative, produce to the Company's Representative, all documents evidencing title to or the contractual arrangement giving the right to the Contractor to use the Contractor's Equipment. In the event of failure to comply with such request within seven (7) days, then without prejudice to any other rights, the Company shall be entitled to withhold the payments due to the Contractor under the Contract.

50. AVAILABILITY OF TOOL & PLANT (T&P)

The contractor shall provide T&P to their staff as mentioned in Scope of work. The contractor shall provide all tools in the beginning of contract and shall ensure the proper availability of tools and tackles as per that list throughout the contractual period. These

tools shall be of make as specified in the Scope of work. It shall be responsibility of contractors to replenish and maintain the existing T&P on regular basis.

51. FREE ISSUE MATERIAL

51.1. The Company, may provide free issue materials to Contractor in those cases only where it is specifically mentioned in the Contract. Transportation of free issue materials from site / store or place of availability at site to the work area shall be in scope of the contractor.

51.2. Contractor shall submit Reconciliation Statement of these free issue materials along with monthly bill. Reconciliation Statement will show issued quantity of free issue materials/ quantity consumed in work and quantity balance in contractor's stock.

51.3. The Contractor shall have to furnish an Indemnity Bond for materials which are free issued by the Purchaser. Further the contractor shall be responsible for the safe custody of materials till the materials are utilized, fabricated, erected and accounted for in all respects.

52. VENDOR CODE OF CONDUCT

Contractor confirms to have gone through the Policy of BYPL on legal and ethical code required to be followed by Vendors encapsulated in the "Vendor Code of Conduct" displayed on the official website of BYPL (www.bsesdelhi.com) also, which shall be treated as a part of the agreement.

Contractor undertakes that he shall adhere to the Vendor code of Conduct and also agrees that any violation of the Vendor Code of Conduct shall be treated as breach of the agreement.

In event of any such breach, irrespective of whether it causes any loss/damage, company (BYPL) shall have the right to recover loss/damage including liquidated damages from Contractor.

The Contractor herby indemnifies and agrees to keep indemnified the company (BYPL) against any claim/litigation/liability/penalty including litigation cost arising out of any violation of Vendor Code of Conduct by the Contractor or its officers, agents & representatives etc.

53. DISCLOSURE OF RELATIONSHIP

The Contractor acknowledges & undertakes that the Contractor or any partner of the Contractor or director of the Contractor is not related to any of the officers of the Company or the Company's Representative, or alternatively, is a close relative of an officer of the Company or the Company's Representative and has no financial interest/stake in the Company's business. The Parties agree that breach of the above provisions shall entitle the Company to terminate the Contract under Clause 23, without payment of any compensation to the Contractor. The Contractor agrees and acknowledges and shall ensure that its employees, directors and partners do not develop any such interest during the Contract Period.

54. MSME

54.1. If the Contractor is covered under the definition of supplier/Contractor under the purview of Micro, Small & Medium Enterprises Development Act, 2006, it shall declare so at the time of its registration as vendor with the Company failing which it will be presumed that it is a non-MSME unit.

54.2. Contractor shall provide to Company the proof of classification of its enterprise and filing memorandum with the authorities concerned under the Micro, Small & Medium Enterprises Development Act, 2006 (herein referred to as "the MSMED Act") within one week of receipt of the Contract

54.3. The Contractor further declares and undertakes to intimate Company of any change in its status or constitution under this section from time to time under this Contract. The Contractor must provide MSME registration number along with PAN card and GST registration number on Tax Invoice failing which the Contractor shall not claim any benefit under the MSME Act.

54.4. The Contractor to furnish the undertaking to the Company in this regard.

55. COVID GUIDELINES

Looking to the prevailing Covid19 situation, Contractor will ensure that the work carried out in the field by their staff shall be as per the guidelines issued by MHA / BYPL/ Engineer-in-charge from time to time. Further Contractor shall be required to provide to their staff masks/ sanitizers/ all PPEs required for working in Covid19 situation. The Contractor shall further ensure to work as per the guidelines issued by BYPL and the instruction of the Engineer in charge.

56. CLEANLINESS & PRECAUTIONS TO BE TAKEN WHILE DOING WORK AT SITE TO PREVENT DUST POLLUTION

All debris shall be removed and disposed off at assigned areas on daily basis. Surplus excavated earth shall be disposed of in an approved manner. In short, the contractor shall be fully responsible for keeping the work site clean at all times. In case of non- compliance, company shall get the same done at Contractor's risk and costs.

While carrying out any civil work including road/ pit digging, plinth/ fence making, road restoration etc contractor shall adhere to below mentioned guidelines.

(a) No construction material/ debris shall be stored on metalled road.
(b) Wind breakers of appropriate height on all sides of ear marked area using CGI sheets shall be raised to ensure that no construction material dust fly outside ear marked area.
(c) The construction material i.e. coarse sand, stone aggregates, excavated earth, cement and any other material to and from the site shall be transported under wet and covered condition to ensure their non-slippage en-route to avoid air contamination.
(d) The contractor shall provide PPE (mask, helmet etc.) to every worker working on the construction site and involved in loading/unloading and carriage of construction material and construction debris to prevent inhalation of dust particles.
(e) Over loading of vehicles shall be strictly prohibited
(f) The construction material at site shall be stored under wet and covered condition.
(g) The dumping sites for temporarily storing the excavated earth shall be properly

levelled, watered and rehabilitated by plantation to avoid flying of dust.

(h) The worker at the site shall be sensitized to adopt / observe the dust controlled measures in true spirit.

(i) If any C&D waste is generated at site the same will be transported to the C&D waste site only and the record for the same will be maintained by the agency.

(j) Wet jet in grinding and stone cutting is being permitted at site.

(k) The necessary record for dust control is being maintained by the department on day to day basis and being monitored regularly.

(l) Contractor shall ensure that no tree shall be harmed and no tree roots shall be destroyed/cut while performing the task under agreement.

(m) The contractor shall comply the provisions of The Delhi Preservation of Trees Act 1994.

The Execution contractor shall be responsible for all the preventive and protective environmental steps as per guidelines. Any violations from the above guidelines have been viewed very seriously by the authorities. Contractor shall be liable for the penalties / other action by the authorities, the contractor shall indemnify BYPL from all liabilities on this account.

57. ENVIRONMENTAL, HEALTH &SAFETY

The Contractor will ensure that the Environment, Health & Safety (EHS) requirements are clearly understood and faithfully implemented at all levels at site as per instruction of Company/BYPL. Contractors must comply with the requirements, as follows:

(i) Comply with all of the elements of the EHS Plan and any regulations applicable to the work

(ii) Comply with the procedures provided in the interests of Environment, Health and Safety

(iii) Ensure that all of their employees designated to work are properly trained and competent

(iii) Ensure that all plant and equipment they bring on to site has been inspected and serviced in accordance with legal requirement and manufacturer's or supplier/Contractor s' instructions

(iv) Make arrangements to ensure that all employees designated to work on or visit the site present themselves for site induction prior to commencement of work

(v) Provide details of any hazardous substances to be brought onsite

(vi) Ensure that a responsible person accompanies any of their visitors to site

All personnel deputed by Contractor under agreement shall be accountable for the following:

(a) Use the correct tools and equipment for the job and use safety equipment and protective clothing supplied, e.g. safety shoes, helmets, goggles, reflective jackets, etc. as instructed

(b) Keep tools in good condition

(c) Report to the Supervisor any unsafe or unhealthy condition or any defects in plant or equipment

(d) Develop a concern for safety for themselves and for others

(e) Prohibit horseplay

(f) Not to operate any item of plant unless they have been specifically trained and are authorized to do so.

58. ACCEPTANCE

Acceptance of the CONTRACT implies and includes acceptance of all terms and conditions enumerated in the CONTRACT, in the technical specification and drawings made available to the Contractor consisting of general conditions and complete scope of work.

Contractor's and Company's contractual obligations are strictly limited to the terms set out in the CONTRACT.

*****

BYPL

SECTION – V

Scope of Work (Attached Separately)

BYPL

BSES Yamuna Power Limited

SECTION – VI

PRICE BID

BYPL

BSES Yamuna Power Limited

SECTION – VI (PRICE BID)

Price Bid Format					
S. NO.	**PACKAGE DESCRIPTION**	**Quantity**	**UOM**	**Amount in INR (Excluding GST)**	**Amount in INR (Including GST)**
1	Turnkey Package for Conversion of Overhead Electrical Network into Underground along with Multi Utility Duct (MUD) System at Chandni chowk (Two locations – Esplanade Road & More Sarai Road), Delhi				
1.1	**Esplanade Road**				
1.1.1	Part A : Duct, Road & Related civil works	1	Lumpsum		
1.1.2	Part B : Electrical works	1	Lumpsum		
	Sub - Total				
1.2	**More Sarai Road**				
1.2.1	Part A : Duct, Road & Related civil works	1	Lumpsum		
1.2.2	Part B : Electrical works	1	Lumpsum		
	Sub - Total				
	Grand Total (Contract Sum)				
	Amount in Words				

NOTE:

1) The price quoted above shall remain firm for the entire duration of the contract including the extension period, if any.
2) Reverse Auction (RA) is mandatory. RA methodology shall be informed separately to all the qualified bidders prior to RA.
3) The bids will be evaluated commercially based on the total all-inclusive price quoted by the bidders. However, BYPL reserves the right to split the work and award the contracts to more than one bidder.
4) The bidder shall quote the prices strictly in the above format/item description/content. The bid shall be liable for rejection if the contractor fails to do so.
5) The bidder needs to quote for all the line items as mentioned above; failing which the bids are liable for rejection.
6) The unit price to be indicated should be exclusive of GST which are to be indicated in separated rows meant for the purpose.
7) All materials are to be arranged by the contractor and test certificates are to be furnished by the contractor, wherever applicable.

BYPL

BSES Yamuna Power Limited

ANNEXURE – I: BID FORM

To,

Head of Department
Contracts & Material Deptt.
BSES YAMUNA Power Ltd
IIIrd Floor, A Block
Shakti Kiran Building, Karkardooma
Delhi 110032

Dear Sir,

1 We understand that BYPL is desirous of awarding the contract for…….. (Name of the Work) work in its licensed distribution network area in Delhi.

2 Having examined the Tender Documents for the above named works, we the undersigned, offer to deliver the goods/services in full conformity with the Terms and Conditions, technical specifications & Scope of Work as may be determined in accordance with the terms and conditions of the contract. The quoted amounts for this work are in accordance with the Price Schedules attached herewith and are made part of this bid.

3 If our Bid is accepted, we undertake to deliver the entire goods/services as per delivery/ completion schedule mentioned in Section III from the date of award of order/letter of intent.

4 If our Bid is accepted, we will furnish a Contract Cum Performance Bank Guarantee (CPBG) for due performance of the Contract in accordance with the Terms and Conditions of the NIT.

5 We agree to abide by this Bid for a period of 180 days from the due date of bid submission and it shall remain binding upon us and may be accepted at any time before the expiration of that period.

6 We declare that we are aware of the provision of all Laws associated with the supply of equipments/materials or Services and the prices have been quoted accordingly.

7 Unless and until Letter of Intent is issued, this Bid, together with your written acceptance thereof, shall constitute a binding contract between us.

8 We understand that BYPL is not bound to accept the lowest, or any bid BYPL may receive.

9 There is provision for Resolution of Disputes under this Contract, in accordance with the Laws and Jurisdiction of Contract.

10 We do hereby agree and shall abide the terms of tender documents/agreement, in full

Dated this..... day of..... 2026

Signature..... In the capacity of ……

.....duly authorized to sign for and on behalf of

(IN BLOCK CAPITALS) .....

*****

BSES Yamuna Power Limited

ANNEXURE – II

BIDDER'S DETAILS

S. No.	Item	Details
1	**Company Name**	
2	BYPL Vendor Code (If Registered)	
3	Area of Specialization	
4	Company Founded Year	
5	Type of Company	
6	Constitution(Company Registration number)	
7	Name of Director / Mobile Number	
8	Name of other main person / Mobile Number	
9	Vendor Address	
10	Vendor Contact no	
11	Vendor Email ID	-
12	No. of Manpower on payroll (Executive/Skilled/Semi-Skilled/Un-skilled)	-
13	No. of Contractual Manpower (Executive/Skilled/Semi-Skilled/Un-skilled)	-
14	Other Office / Factory Address	
15	ISO certification	
16	PAN	
17	PF/ESI	
18	Shop Establishment Certificate (If Applicable)	
19	Electrical License Detail(If Applicable)	
20	GST	
21	GST Registration Date	
22	SSI	
23	MSME Registration Number (If Applicable)	

BYPL

S.No.	Item	Details
24	Turn Over FY 2022-23 (Rs. Cr.)	
25	Turn Over FY 2023-24 (Rs. Cr.)	
26	Turn Over FY 2024-25 (Rs. Cr.)	
27	Profit after Tax FY 2022-23(Rs. Cr.)	
28	Profit after Tax FY 2023-24(Rs. Cr.)	
29	Profit after Tax FY 2024-25(Rs. Cr.)	
30	Networth (Rs Cr.)	
31	Bank Guarantee Limit (in Cr.)	
32	Over Draft/Cash Credit Limit (in Cr.)	
33	Present Order Booking (Rs Cr.)	
34	Order executed with Reliance ADA (Rs Cr.)	
35	Name & Detail of relative working in BYPL	
36	Main Customer	
37	Details of orders executed / Under Execution	Please submit the details in Attachment - A

BYPL

ATTACHMENT – A

Reference List of Order Executed / under Execution by the Vendor (M/s ……)

A) Major Orders Executed

SN	Name of Project	Client name & address	Client contact Detail (Person name, e-mail ID, Mobile & landline number)	Vendor's Scope of Work	Date Of Award	Value of Work (Rs in Lakhs)	Completion date as par Order	Actual Completion Date	LD / Penalty imposed, if any (Rs in Lakhs)	Litigation / Arbitration (Y/N) (If Yes, furnish details)	Remarks
1.											
2.											
3.											
4.											
5.											

BYPL

B) Orders Under Execution

SN	Name of Project	Client name & address	Client contact Detail (Person name, e-mail ID, Mobile & landline number)	Vendor's Scope of Work	Date Of Award	Value of Work (Rs in Lakhs)	Completion date as par Order	Actual Completion Date	LD / Penalty imposed, if any (Rs in Lakhs)	Litigation / Arbitration (Y/N) (If Yes, furnish details)	Remarks
1.											
2.											
3.											
4.											
5.											

BYPL

ANNEXURE – III

SAFETY CONDITIONS OF CONTRACT

Annexure–A (Safety Penalty Conditions)

1.0 All contractors have to observe safety day/ week on 4th March to 10th march every year with proper planning and record to create safety awareness inside their organization. A detail report of observing the same to be forwarded to safety department every year.

2.0 Guidelines for Penalty Policy Implementation

2.1 Penalty for not following SOP already circulated.

A penalty of Rs. 500/- shall be levied on the contractor for not following SOP and creating unsafe conditions at work place.

2.2 Penalty for Misconduct:

2.2.1) A penalty of Rs. 10,000/- shall be levied on the contractor for the first incident of misconduct.

2.2.2) A penalty of Rs. 25,000/- shall be levied on the contractor for the second incident of misconduct.

2.2.3) A penalty of Rs. 50000.00 shall be levied on the contractor for the third incident of misconduct & termination of the contractor.

2.2.4) Depending upon the level of mal practice, Engineer In-Charge/Head (Civil) can take a decision which will have on report of misconduct, the matter will be scrutinized at the appropriate level and the complaint found genuine above Penalties shall be applicable.

BYPL

2.3 PENALTYPOLICYON SAFETYVIOLATION

Class	Type of Offense	Penalty Detail	Execution Channel
A	Not Wearing Safety Helmets Safety shoes/ Safety Goggles / Electrical insulating hand gloves/ reflective jacket/Not using electrically safe tools and equipments. (Poor quality or damaged item means noncompliance)	-First Offence -Warning Note & Rs.2000/- - Second Offence -Warning Note & Fine of Rs.5000/- -Third Offence-Note of recommendation of the concerned workmen/ supervisors for termination of his job & Fine of Rs.15000/-	¾ Recommendation by OHS Representative/ EIC/Head (Civil) ¾ Approval by Safety Head Deduction by Finance & Account
B	Not wearing Full Body Harness/fall arresters while working at a height more than 1.8 meter or where from a person may fall. Not using Safety Net to arrest falling objects and personnel. Not using Arc Protection Face Shield Not using barricading cone and tape. (Poor quality or damaged item means noncompliance)	-First Offence -Warning Note & Fine of Rs.5000/- - Second Offence -Warning Note for dismissal and a Fine of Rs.10000/- -Third Offense -Action for the concerned workman/ supervisor for termination of his job and a fine of Rs.25000/	¾ Recommendation by OHS Representative/ EIC/Head (Civil) ¾ Approval by Safety Head Deduction by Finance & Account
C	Any other unsafe work practices or condition which is considered having potential for fatality or injury to personnel.	-First Offence -Warning Note & Fine of Rs.10000/- -Second Offence-Action for the concerned workmen/supervisors for termination of his job and fine of Rs.20000/-.	¾ Recommendation by OHS Representative/ EIC/Head (Civil) ¾ Approval by Safety Head Deduction by Finance & Account

Notes:

(a) If there are 03 violations by an individual employee/supervisor of the vendor, services will be terminated.

(b) If there are10 violations in one quarter, will be recommended for termination of contract order.

(c) Total penalty shall be calculated by multiplying the number of safety violations and the penalty amount specified for such violations.(Example-If at first offence 3 persons are found working without safety helmet, the penalty would be 3X2000= Rs.6000/-)

(d) The amount of penalty can be increased or decreased based upon the seriousness of safety violations. The decision of recommending authority shall be final one.

(e) Recommending authority shall fill the Annexure-1based upon his factual observations and shall send it to/ EIC/Head(civil)and Safety Head who in turn shall either reject or approve it. If approved, he shall send it to Finance & Accounts for execution. Finance Accounts shall execute the penalty and confirm the same in the Annexure & shall send it back to EIC/Head(Civil) and Safety Head.

(f) Recommending Authority means all, EIC, HODs, Site Safety officer /Supervisor, representatives from EHS and other personnel authorized jointly by O&M / Civil.

(g) EIC/Head (Civil), and Safety Head may impose penalty for serious violations directly.

(h) All penalties shall be imposed directly on the concerned contractors. No penalty shall be imposed on individuals.

(i) Safety violations to be considered for Penalty are classified as A, B & C.

BYPL

Annexure-B

BSES YAMUNA POWER LIMITED (Name of Site)

Safety Appreciation / Violation Memo

DIVISION/Area: ----------Date & Time: -----Name of Contractor: ----------

Activity: ----------Name of EIC: ----------

Appreciation/Penalty Memo:-

S.No.	Safety Violation Details	Class(A/B/C) No. of Violations Penalty per Violation (Rs.)	Penalty Amount (Rs.)	Remarks

Safety Appreciation/Violation Note:

Recommended By:

Name: ----------

Designation: ----------

Sign/Date: ----------

Approved By(EIC):

Name: ----------

Designation: ----------

Sign/Date: ----------

BYPL

Annexure-C

BSES YAMUNA POWER LIMITED (Name of Site)

Monthly Status of PPE's / ToolKit

Location/Area: ----------Date & Time: ----------Name of Contractor: ----------No of Labourers----------

Status of PPE's

S. No.	Name of PPEs/Tool No. of PPEs (if applicable)	Conditions	Remarks
1	Safety Helmet		
2	Safety Google		
3	Electrical Insulating Hand Gloves		
4	Full Body Harness		
5	Safety Shoes		
6	Reflective Jacket		

Signature / Date ----------

BYPL

BSES Yamuna Power Limited

Annexure-D

BSES YAMUNA POWER LIMITED (Name of Site)

Monthly Status - Accident / Incident

Location/Area: ----------Date & Time: -----

Name of Contractor: ----------

Table-1:Summaryof Accident/Incident/Near Miss / Dangerous Occurrences / First Aid:

S.NO.	Type of Accident/Incident//Near Miss/Dangerous Occurrences / First Aid	Person Injured	Brief Description
1			
2			
3			
4			
5			

Table-2:LearningfromIncidents:

S.No.	Brief Description	Root Cause	Recommendation

Table-3:Summaryof Person Injured:

S.No.	NameofEmployeeEmp.ID /Designation/PFNo./ESI No.	Type of Injury	Duration of Medical Rest	
			From:	To

Table-4:SafetyInspections/Violation

S.No.	Date	Location	Discrepancies	Compliance

Table - 5 : Health & SafetyComplaints & Suggestions :

S.No.	Date	Location	Compliance /Suggestion

Measures to avoid recurrences for all above mentioned discrepancies (Attach relevant documents if required)

Signature / Date --------.

BYPL

Annexure-E

BSES YAMUNA POWER LIMITED (Name of Site)

Format - PPE's Receipt byworkers

Division:

Name of Contractor:

S.No.	Name Designation	Safety Helmet	Electrical insulation Hand Gloves	Full Body Harness	Reflective Jacket	Safety Shoes	Safety Google	Signature

Signature of Contractor / Date----------

BYPL

Annexure-F

QUALITY OF SAFETYTOOLS

1).SafetyShoes-WithComposite/Fibertoes(CEapproved/IS15298)-Mandatoryforall personnel working at BYPL. The safety shoes shall meet the following features:

1.ElectricShockResistantSole

2.ImpactResistant

3.Scrap/Heat Resistant

4.SlipResistant

5.OilandAcidResistant

Lead MAKE:BATA/LIBERTY

2).**Safety Helmets:**(IS 2925 - 1984 or DGMS) with chin strap – Mandatory for all personnel working at BYPL. The specification of safety helmet shall be as given below:

V-GARD HDPE Yellow With 4 Point Fast Trac Ratchet Suspension

Shell Material	UV stabilized HDPE, Non vented
Suspension	•With 4 Point Fastrack Ratchet Suspension sewn headband •Textile straps made from polyester Suspension • point fixing: good positioning,...stability, better air circulation due to...limited contact are as with the head• Easy clean sweatband
Size	52-62cm
Accessory slot	Standard 30mm with removable HDPE dead plugs suitable to leak proof fitting
Approvals	ANSI/IECZ89.1Class E(electrical)
Additional	Low temperature -10°C (acc. to GB2811), High temperature+50°C
Colours	Yellow
weight	360 g

LeadMAKE:3M/KARAM/Honeywell

BYPL

3).**Full Body positioning Harness**:(CE approved/IS3521/EN361/EN355)-Shall be used while work is in progress at height more than 1.8 meter or where from a person may fall and get injured. The specification of the Full body harness shall be as given below:

Anchorage	Adjustable two chest attachment D-rings and Adorsal attachment D- ring
Adaptability	Adjustable shoulder and thigh straps
Convenience	Shoulder and thigh straps differentiated by a dual color scheme.
Ergonomics	Ideally. Positioned sit strap for extended comfort.
Size	Standard
weight	1200GMS
ENERGYABSORBINGFORKEDLANYARDS:	
Spec.	44mm wide polyamide webbing.
Length	1.5 Meter

4) **Safety Spectacles**-Shall be used to protect work erseyes from foreign materials and flying particles. Mandatory for all personnel working at BYPL. Safety goggles shall meet the following feature.

- Polycarbonate/Acetatelens for special applications requiring superior chemical resistance.

•Industrial version of tough and popular first responder goggles.

•Soft Flex low profile frosted frame for increased comfort.

•Comfortable head band with length adjustment.

- Indirect venting for comfortable, long lasting wear can be worn with safety helmets and over prescription spectacles.

- Sight gard+premiumanti-fog coating(EN166"N")with good anti-scratch properties.

BYPL

Technical Specification of spectacles:

Weight	95g.
Lens thickness	1.0mm
Overall width	173mm
Over alllength	90mm
Bridge	47.6mm
Lens base	5.5 curve
Lenssize	86.1mmverticle,174mmdiagonal
Headband	Adjustable length at max.440mm (longenough to fit together with helmets)
Material & colors	
Lens	Acetateclear, coating, Sightgard + anti-fog accordingtoEN166“N”&antiscratch.
Body	PVCsmoke
Headband holder	Nylon
Headband	Adjustable grey elastic fixed on frame side parts
Marking/Approvals	
Standard number	EN 166
Frame marking	MSAEN16634-FTCE
Lensmarking	2C-1.2MSA1FTNCE
Filter class	2C (Ultra violet radiation with enhanced color recognition)
Scale number	1.2:luminoustrasmittance-89%
Optical class	1 (best class, for permanent wear)
Mechanical resistance	F(low energy impact45m/s)T(at extreme temperature-5 to +550 C)
Resistance to	N(distorted vision due to lens fogging)
UV filter	99.9%
Ordering information	10145578-FlexiChem Sightgard + clear, 6x

Lead MAKE: MSA/UVEX/3M

BYPL

5) **Electrical Insulating Hand Gloves** –Shall be used to prevent electric shock based upon the hazards/risks involved in a particular activity. Safety goggles shall meet the following feature

- •Break through manufacturing process deliver sex caption dry grip.
- •Soft and flexible for enhanced tactility, high dexterity and wearer comfort.
- •Ergonomic design featuring tapered finger storeduceh and fatigue.
- •Relaxed wrist for easy on/off.

Length	360mm
Class	2
Thickness	3.6mm
Proof test voltage	20000
Maximum use voltage	11000
Tensile strength	>16mpa[Mega Pascal]
Puncture resistance	>18N/mm[Newton per mili meter]
Elongation at break	>600%[Stretching length]
Tension set	<15%

It should be resist tool, acid, ultra violet rays and very low temperature.

Each pair of glove should be marked with class, category, month & year of manufacturing, CE
logo, batchno and certified laboratory no.

EN certified to electrical and thermal hazards, EN certified to thermal & electrical hazards to confirm EN60-903, EN certified to mechanical hazard to EN-388 Lead MAKE: Honey well/ANSELL

6) **Reflective Safety Jacket** -Class-2 Safety Vest mandatory for all personnel working at BYPL O&M shall be used by the worker during the work.

7) **Warning Tapes** –HDPE or LDPE Made of 50 micron thick, non adhesive, width 75mm – Safety Logo embossed at every foot with white and red strips on both sides in Tubular form– Shall be used for barricading area around excavated pittowarn the personnel not to enter in such areas.

8)**Road barricading cone with barricading tape**-Shall be used by the worker during the operation / maintenance work.

Signature of Contractor / Date…….

BSES Yamuna Power Limited

ANNEXURE – IV

ACCEPTANCE FORM FOR PARTICIPATION IN REVERSE AUCTION EVENT

(To be signed and stamped by the bidder prior to participation in the auction event)

BYPL intends to use the reverse auction through SAP-SRM tool as an integral part of the entire tendering process. All the bidders who are found as techno commercially qualified based on the tender requirements shall be eligible to participate in the reverse auction event.

The following terms and conditions are deemed as accepted by the bidder on participation in the bid event:

1. BYPL shall provide the user id and password to the authorized representative of the bidder. (Authorization letter in lieu of the same be submitted along with the signed and stamped acceptance form).

2. BYPL will make every effort to make the bid process transparent. However, the award decision by BYPL would be final and binding on the supplier/Contractor.

3. The bidder agrees to non-disclosure of trade information regarding the purchase, identity of BYPL, bid process, bid technology, bid documentation and bid details.

4. The bidder is advised to understand the auto bid process to safeguard themselves against any possibility of non-participation in the auction event.

5. In case of bidding through internet medium, bidders are further advised to ensure availability of the entire infrastructure as required at their end to participate in the auction event. Inability to bid due to telephone line glitch, internet response issues, software or hardware hangs; power failure or any other reason shall not be the responsibility of BYPL.

6. In case of intranet medium, BYPL shall provide the infrastructure to bidders, further, BYPL has sole discretion to extend or restart the auction event in case of any glitches in infrastructure observed which has restricted the bidders to submit the bids to ensure fair & transparent competitive bidding. In case of an auction event is restarted, the best bid as already available in the system shall become the start price for the new auction.

7. In case the bidder fails to participate in the auction event due any reason whatsoever, it shall be presumed that the bidder has no further discounts to offer and the initial bid as submitted by the bidder as a part of the tender shall be considered as the bidder's final no regret offer. Any offline price bids received from a bidder in lieu of non-participation in the auction event shall be out rightly rejected by BYPL.

8. The bidder shall be prepared with competitive price quotes on the day of the bidding event.

9. The prices as quoted by the bidder during the auction event shall be inclusive of all the applicable taxes, duties and levies and shall be FOR at BYPL site.

10. The prices submitted by a bidder during the auction event shall be binding on the bidder. No further communication will be there.

11. No requests for time extension of the auction event shall be considered by BYPL.

12. The original price bids of the bidders shall be reduced on pro-data basis against each line item based on the final all-inclusive prices offered during conclusion of the auction event for arriving at contract amount.

For……

Signature:

Name:

Designation:

BYPL

ANNEXURE – V
MEASURES RELATED TO THE TREE PRUNING, EXCAVATION NEAR TREE AND CONSTRUCTION & DEMOLITION:

Notwithstanding anything stated in the tender document, work contract or any other communication issued related to the performance of the work order awarded, it is clarified that the vendor and its associate/employees/worker, during the performance of work under this work order(s), shall ensure full compliance of the provisions of all environment laws/rules/directions by any authority including judicial authority/ regulation related to excavation near tree and construction & demolition activity, and shall mandatorily comply the following instructions:

A. Tree Pruning, Planning, Installation and Maintenance of Utility Apparatus in proximity to trees shall be done mandatorily by ensuring the following prescribed measures:

1) No excavation work shall be done within two (2) meters of the Tree Trunk.
2) Whereas, the permission of the **"Tree Officer"** is necessary to be taken before commencement or initiation of any civil work, which are likely to be made within a distance of two (2) meters from any existing tree.
3) Any exposed roots beyond 2 meters of the tree trunk, should be protected with dry sacking and backfilling must be done with a suitable manure mixture and/or the compost material mix as soon as possible on the completion of the works.
4) For any excavation to be carried out beyond the **prescribed distance of 2 meters but within 3 meter** from the tree trunk, **manual methods (by use of hand)** or by using trenchless techniques shall be preferred over use of a mechanical excavation.
5) No roots shall be cut during the excavation work.
6) Not to lean any materials against or chain mechanical plants to the trunk of the trees.
7) Avoid any soil contamination from oil, gasoline, paint and paint thinner or other chemicals.
8) No concrete or construction or repairing work shall be done at least within two (2) meter radius of the trunk of trees.
9) All the electric wires and high tension cables and other apparatus relating to supply of electricity shall permanently be removed from the trees branches.

Records to be maintained by the supervisor to demonstrate adherence to the guidelines for excavation in Proximity to the Trees:

1) To ensure the specific stipulation that in case any work is to be commenced, which is within two (2) meters radius from any existing tree, the permission of the "Tree Officer" shall have to be taken as a mandatory condition. (Non-compliance of the aforesaid condition shall entail strict penalty).
2) Ensure pre and post photography and videography of the site demarcated for the excavation work and the same shall not be deleted/removed until securing the prior permission of the Circle head O&M.
3) While digging and upon exposure to the roots– take immediate photographs of the same and report the matter to senior officers for further guidance.
   If any unauthorized layering of other cables is being carried out at the digging site by some

other agency/person, then immediately capture photographs of the same and inform the seniors, who shall take suitable legal actions, if required, which includes intimating to tree officer about such unauthorized laying of wires by such agency.

B. DUST MITIGATION MEASURES FOR CONSTRUCTION & DEMOLITION ACTIVITIES

Any construction/demolition/excavation related activity performed in furtherance of the performance of work under award, be undertaken only after ensuring the Dust Mitigation Measures prescribed as follows:

1) Dust/wind breaking walls of appropriate height around the periphery of the construction site.
2) Installation of Anti Smog Gun(s) (for >20,000 m2 built up area).
3) Tarpaulin or green net on scaffolding around the area under-construction and the building.
4) All vehicles including carrying construction material and construction debris of any kind should be cleaned and wheels washed.
5) All vehicles carrying construction material and construction debris should be fully covered and protected.
6) All construction debris and construction material of any kind should be stored on the site and not dumped on public roads or pavements.
7) No loose soil or sand or Construction & Demolition Waste or any other construction material which may cause dust, shall not be left uncovered.
8) No grinding and cutting of building materials in open area. Wet jet should be used in grinding and stone cutting.
9) Unpaved surfaces and areas with loose soil should be adequately sprinkled with water to suppress dust.
10) Roads leading to or at construction sites must be paved and blacktopped i.e., metallic roads (for >20,000 m2 built up area).
11) Construction and demolition waste should be recycled on-site or transported to authorized recycling facility and due record of the same should be maintained.
12) Every worker working on construction site and is involved in loading, unloading and carriage of construction material and construction debris should be provided with dust-mask to prevent inhalation of dust particle.
13) Arrangement should be provided for medical help, investigation and treatment to workers involved in the construction of building and carry of construction material and debris relatable to dust emission.
14) Dust mitigation measures shall be displayed prominently at the construction site for easy public viewing.
15) Ensure the compliance of all dust control measure.

It is clarified that BSES Yamuna Power Limited (BYPL) has zero tolerance with respect to the non-compliance/breach of environment laws/rules/directions by any authority including judicial authority/ regulation. Accordingly, in case of breach by the vendor/its associate/employee/worker to the laws/rules as detailed above, shall be termed as serious breach to the terms of work order and BYPL shall be free to take all actions against vendor for such breach of contract including the termination of the said contract. Additionally, the vendor shall also be liable to indemnify BYPL/its Directors/Officers/Employees/Associates in full including the payment of all

loss/penalties/compensation including environment compensation as imposed by any judicial/quasi-judicial citing/alleging such breach.

The vendor shall also be under a mandate to provide an Undertaking to BYPL, which includes that the excavation, tree pruning, construction and demolition work, if performed by such vendor, the same shall be in strict adherence of all environment laws/rules/directions by any authority including judicial authority/ regulation and all the measures provided in work order/tender under the head/title "**Measures related to the Tree Pruning, excavation near tree and construction & demolition**".

BYPL

FORMAT – 4.1
EMD BANK GUARANTEE

(To be issued in a Non Judicial Stamp Paper of Rs.100/-purchased in the name of the bank)
Whereas [name of the Bidder] (herein after called the "Bidder") has submitted its bid dated[date of submission of bid] for the supply/services of [name and/or description of the goods/sevices] (here after called the "Bid"). KNOW ALL PEOPLE by these presents that WE [name of bank] at [Branch Name and address],having our registered office at[address of the registered office of the bank](herein after called the "Bank"),are bound unto BSES YAMUNA Power Ltd., with its Corporate Office at SHAKTI KIRAN BUILDING, KARKARDOOMA, Delhi 110032 ,(herein after called —the "Purchaser")in the sum of …… (Rupees …… only) for which payment well and truly to be made to the said Purchaser, the Bank binds itself, its successors, and assigns by these presents. Sealed with the Common Seal of the said Bank this_____ day of_____ 2026. The Conditions of this obligation are:

1. If the Bidder withdraws its Bid during the period of bid validity specified by the Bidder on the Bid Form;

or

2. If the Bidder, having been notified of the acceptance of its Bid by the Purchaser during the period of bid validity:

(a) Fails or refuses to execute the contract form, if required: or

(b) Fails or refuses to furnish the performance security, In accordance with the instructions to Bidders/Terms and Conditions.

We undertake to pay to the Purchaser up to the above amount upon receipt of its first written demand, without the Purchaser having to substantiate its demand, provided that is its demand the purchaser will note that amount claimed by it is due to it, owing to the occurrence of one or both of the two condition(s), specifying the occurred condition or condition(s). This guarantee will remain in force up to and including 180 days after the due date of submission bid, and any demand in respect thereof should reach the Bank not later than the above date.

(Stamp & signature of the bank)

Signature of the witness(s)

BYPL

BSES Yamuna Power Limited

FORMAT – 4.2

PROFORMA OF CONTRACT CUM PERFORMANCE BANK GUARANTEE

(TO BE ISSUED ON RS 100/- STAMP PAPER)

This Guarantee made at _____ this [___] day of [_____] 2026

1. WHEREAS **M/s BSES Yamuna Power Limited**, a Company incorporated under the provisions of Companies Act, 1956 having its Registered Office at **Shakti Kiran Building, Karkardooma, Delhi 110032**, India hereinafter referred to as the "Company", (which expression shall unless repugnant to the context or meaning thereof include its successors, administrators, executors and assigns).

2. AND WHEREAS the Company has entered into a contract for _____ (Please specify the nature of contract here) vide Contract No. _____dated _____ (hereinafter referred to as the "Contract") with M/s._____, (hereinafter referred to as "Contractor", which expression shall unless repugnant to the context or meaning thereof be deemed to mean and include each of their respective successors and assigns) for providing services on the terms and conditions as more particularly detailed therein.

3. AND WHEREAS as per clause ____of General Conditions of Contract, the Contractor is obliged to provide to the Company an unconditional bank guarantee for an amount equivalent to five percent (5%) of the total Contract Value for the timely completion and faithful and successful execution of the Contract from [_____] pl. specify the name of Bank) having its head/registered office at [_____] through its branch in _____(pl. specify the name of Branch through which B.G is issued)hereinafter referred to as "the Bank", (which expression shall unless it be repugnant to the context or meaning thereof be deemed to include its successors and permitted assigns).

4. NOW THEREFORE, in consideration inter alia of the Company granting the Contractor the Contract, the Bank hereby unconditionally and irrevocably guarantees and undertakes, on a written demand, to immediately pay to the Company any amount so demanded (by way of one or more claims) not exceeding in the aggregate [Rs.]……(in words)without any demur, reservation, contest or protest and/or without reference to the Contractor and without the Company needing to provide or show to the Bank, grounds or reasons or give any justification for such demand for the sum/s demanded.

5. The decision of the Company to invoke this Guarantee and as to whether the Contractor has not performed its obligations under the Contract shall be binding on the Bank. The Bank acknowledges that any such demand by the Company of the amounts payable by the Bank to the Company shall be final, binding and conclusive evidence in respect of the amounts payable by the Supplier to the Owner. Any such demand made by the Owner on

the Bank shall be conclusive and binding, notwithstanding any difference between the Owner and the Contractor or any dispute raised, invoked, threatened or pending before any court, tribunal, arbitrator or any other authority.

6. The Bank also agrees that the Company at its option shall be entitled to enforce this Guarantee against the Bank as a principal debtor without proceeding against the Contractor notwithstanding any other security or other guarantee that the Company may have in relation to the Contractor's liabilities.

7. The Bank hereby waives the necessity for the Company first demanding the aforesaid amounts or any part thereof from the Contractor before making payment to the Company and further also waives any right the Bank may have of first requiring the Company to use its legal remedies against the Contractor, before presenting any written demand to the Bank for payment under this Guarantee.

8. The Bank's obligations under this Guarantee shall not be reduced by reason of any partial performance of the Contract. The Bank's obligations shall not be reduced by any failure by the Company to timely pay or perform any of its obligations under the Contract.

9. The Bank further unconditionally and unequivocally agrees with the Company that the Company shall be at liberty, without the Bank's consent and without affecting in any manner its rights and the Bank's obligation under this Guarantee, from time to time, to:
   (i) Vary and/or modify any of the terms and conditions of the Contract;

   (ii) Forebear or enforce any of the rights exercisable by the Company against the Contractor under the terms and conditions of the Contract; or

   (iii) Extend and/or postpone the time for performance of the obligations of the Contractor under the Contract;

   and the Bank shall not be relieved from its liability by reason of any such act or omission on the part of the Company or any indulgence shown by the Company to the Contractor or any other reason whatsoever which under the law relating to sureties would, but for this provision, have the effect of relieving the Bank of its obligations under this Guarantee.

10. This Guarantee shall be a continuing bank guarantee and shall not be discharged by any change in the constitution or composition of the Contractor, and this Guarantee shall not be affected or discharged by the liquidation, winding-up, bankruptcy, reorganization, dissolution or insolvency of the Contractor or any of them or any other circumstances whatsoever.

11. This Guarantee shall be in addition to and not in substitution or in derogation of any other security held by the Company to secure the performance of the obligations of the Contractor under the Contract.

12. NOTWITHSTANDING anything herein above contained, the liability of the BANK under this Guarantee shall be restricted to _____ (insert an amount equal to Five percent (05%) of the Contract Value) and this Guarantee shall be valid and enforceable and expire on _____ (pl. specify date) or unless a suit or action to

enforce a claim under this Guarantee is filed against the Bank on or before the date of expiry.

13. On termination of this Guarantee, all rights under the said Guarantee shall be forfeited and the Bank shall be relieved and discharged from all liabilities hereunder.

14. The Bank undertakes not to revoke this Guarantee during its validity except with the prior written consent of the Company and agrees that any change in the constitution of the Bank or the Contractor shall not discharge our liability hereunder.

15. Company may assign this Guarantee to any Person or body whether natural, incorporated or otherwise under intimation to the Bank. The Bank shall be discharged of its obligations hereunder by performance in accordance with the terms hereof to such assignee without verifying the validity / legality / enforceability of the assignment.

16. This Guarantee shall be governed by the laws of India. Any suit, action, or other proceeding arising out of, connected with, or related to this Guarantee or the subject matter hereof shall be subject to the exclusive jurisdiction of the courts of Delhi, India.
Dated this …… day of …….. …2026 at …….

(Signature)
.....

(Name)
.....

(Designation with Bank Stamp)

Attorney as per

Power of Attorney No.....

Date.....

Beneficiary's bank detail with IFSC Code:
1. Name of the Bank: State Bank of India
2. Branch Name & Full Address: Industrial Finance Branch, 14-15 Floor, Jawahar Vypar Bhawan, 1, Tolstoy Marg, New Delhi 110001
3. Bank Account No: 10277791808
4. IFSC Code: SBIN0009601

Vendor has to fill this form & submit along with the PERFORMANCE BANK GUARANTEE

1. Bank Email ID----------Bank Phone No----------

2. Where to Dispatched the BG -Local Address of bank ----------

BYPL

3. Where to Dispatched the BG Head Office Address ----------

BYPL

FORMAT – 4.3
NON-DISCLOSURE AGREEMENT

THIS NON-DISCLOSURE AGREEMENT ("Agreement") is made and entered into at Delhi on the _____ day of _____, 2026

By And Between

M/s BSES Yamuna Power Limited, a company registered under the Companies Act, 1956 and having its registered office at **Shaktikiran Building, Karkardooma, Delhi 110032** (hereinafter referred to as the "Disclosing Party" which expression shall unless repugnant to the meaning and context mean and include its successors and permitted assigns) of the FIRST PART

And

_____, a company incorporated under the Companies Act, 1956 and having its registered office at _____, (hereinafter referred to as the "Receiving Party" which expression shall unless repugnant to the meaning and context mean and include its successors and permitted assigns) of the OTHER PART

Disclosing Party and Receiving Party are hereinafter individually referred to as the "Party" and collectively as the "Parties".

WHEREAS the Disclosing Party is in discussions with the Receiving Party for Security Management Services ("Project") and the Disclosing Party may in conjunction with the aforesaid disclose to the Receiving Party information relating to their businesses which is confidential and sensitive in nature and the Receiving Party is willing to undertake to restrict the use and further disclosure of the information in accordance with the terms and conditions set out herein:

1. The "Receiving Party" acknowledges and confirms the confidential and sensitive nature of all information, documents and material relating to Persons and entities which may be accused of or related to the theft of electricity which is a penal offense under the provisions of the electricity act 2003As well as the various data and tools which may be available by way of documents as well as other modes of proof("Project") (i) that may be disclosed or made available to the Receiving Party by the Disclosing Party or its employees/ representatives/ advisors/ consultants; (ii)Receiving Party may gain or gather from any source; (iii) Receiving Party may process or arrive at during the course of the Project; (iv) Receiving Party may have come across during its discussions with any person in the course of the Project; and (v) all negotiations and discussions between the Parties relating to the Project (all the information referred to above is hereinafter referred to as the "Confidential Information").

2. Confidential Information is understood to include but is not limited to information made available in written, machine recognizable, graphic or sample form including, without limitation, drawings, photographs, models, design or performance specifications, its analysis, compilations, studies, notes and all other information and data disclosed orally or visually which has been developed / is exclusive to the Disclosing Party and includes information provided in various meetings.

   Provided, however, that Confidential Information shall not include information which (a) is, or becomes, publicly known, otherwise than through a wrongful act of the Receiving Party or its representatives; (b) is in the possession of the Receiving Party prior to receipt from the Disclosing Party or its representatives without an obligation of confidentiality; (c) is independently developed by the Receiving Party, provided that it was not derived from the Confidential Information; (d) is furnished to others by the Disclosing Party without restrictions, similar to those herein on the rights of such others to use or disclose; or (e) is approved in writing by the Disclosing Party for disclosure.

3. The Receiving Party shall not disclose the Confidential Information to any other person save and except with the express consent in writing given by the Disclosing Party. The Receiving Party, however, may disclose such part of the Confidential Information where (i) such disclosure is in response to a valid order of a court or any other governmental body having jurisdiction over this Agreement or (ii) such disclosure is otherwise required by law, provided that Receiving Party has given prior written notice to the Disclosing Party forthwith it came to learn about such disclosure requirement or the demand for such for disclosure and made all reasonable efforts to protect the Confidential Information in connection with such disclosure.

4. The Receiving Party shall with reference to the Confidential Information take all actions as may be necessary to (i) maintain the confidentiality thereof; (ii) limit its use of such Confidential Information solely for the purpose of the Project; (iii) avoid disclosure even to any of its employees that are not associated with the Project; (iv)avoid any dissemination or publication by any of its employees/ representatives associated with the Project; (v) avoid writing about sensitive information which is disclosed verbally and is sensitive to the operations; and (vi) safeguard the Confidential Information from being accessed by any unauthorized person. Such actions shall include but not be limited to obtaining appropriate non-disclosure undertakings from its employees directly or indirectly engaged in the Project.

5. The Receiving Party hereby agrees to indemnify and hold harmless the Disclosing Party and its directors and employees from and against any damage, loss, cost or liability (including all expenses and costs of enforcing rights under the Agreement) arising out of or resulting from (i) any use or disclosure by the Receiving Party of Confidential Information in violation of the Agreement; (ii) any leakage of the

Confidential Information at the end of the Receiving Party or its employees/ representatives; and (iii) breach or violation of any of the other covenants herein.

6. The Receiving Party will, promptly upon the request of the Disclosing Party, deliver to the Disclosing Party, the documents comprising the Confidential Information or any part thereof and will destroy any copies, notes, or extracts thereof, without retaining any copy thereof, except that any portion of the Confidential Information that consists of analysis and any written Confidential Information not so requested and returned, shall be retained and kept subject to the terms of this Agreement, or upon the Disclosing Party's request destroyed (such destruction to be confirmed in writing).

7. The term of this Agreement is 05 month from the date of execution of this Agreement. However, the obligation to maintain confidentiality of the Disclosing Party's information shall survive the termination of this Agreement. Any violation of this agreement may lead to termination of all the relations with the Receiving party and black listing/ debarring of the Agency for future engagements.

8. This Agreement shall be governed by the laws of India. Any dispute, difference or claim related to or arising under, out of or in connection with this Agreement shall be resolved subject to the jurisdiction of Delhi Courts.

For the Disclosing Party

_____
Authorized Signatory
Name:
Designation:

For the Receiving party

_____
Authorized Signatory
Name:
Designation:

BYPE

BSES Yamuna Power Limited

FORMAT – 4.4

NO DEVIATION DECLATATION

NO DEVIATION –A(Technical)
NIT NO & DATE:

DUE DATE OF TENDER:

We hereby accept all terms and conditions of the technical scope of work as mandated in the tender documents subject to the following deviations as mentioned against the applicable technical qualifying requirement:

S.NO.	SL.NO OF TECHNICAL SPECIFICATION/SCOPE OF WORK	DEVIATIONS, IF ANY

SIGNATURE & SEAL OF BIDDER

NAME OF BIDDER

Note-The above template is indicative only, May vary depending on the nature of procurement/value.

NO DEVIATION –B(Commercial)

NIT NO & DATE:

DUE DATE OF TENDER:

We hereby accept all terms and conditions of the commercial requirement as mandated in tender document subject to the following deviations as mentioned against the applicable commercial qualifying requirement:

S.NO.	S. NO OF COMMERCIAL REQUIREMENTS	DEVIATIONS, IF ANY

SIGNATURE & SEAL OF BIDDER

NAME OF BIDDER

BYPL

Note:-It is important to explicitly include all such terms and conditions which are considered absolutely necessary to be accepted by bidder without any deviation. Tender document shall have a stipulation that deviation to such criteria shall make the bid liable for rejection.

BYPL

BSES Yamuna Power Limited

FORMAT – 4.5

BIDDER'S COMMUNICATION DETAILS

Bidder should furnish the below details for future communication: -

GENERAL INFORMATION	
NAME OF Company	
POSTAL ADDRESS	

FOR TECHNICAL QUERY:		
CONTACT PERSON & DESIGNATION	NAME	DESIGNATION
E-MAIL	MOBILE NO	TELEPHONE NO

FOR COMMERCIAL QUERY:		
CONTACT PERSON & DESIGNATION	NAME	DESIGNATION
E-MAIL	MOBILE NO	TELEPHONE NO

Note: No communication shall be entertained from any other email id, except as mentioned above. Bidder needs to inform the company if any changes in the email id on their letterhead duly signed by the authorized signatory.

BYPL

***

BYPL

FORMAT – 4.6

FORMAT OF WORK COMPLETION CERTIFICATE

Work completion certificate No.
Date :

Subject: Contract with M/s. _____for _____

Reference :
1. Work Order No.---------- Dated----------
2. Work Execution Intimation/WO no. ---------- dated ----------

This is to certify that M/s._____have carried out _____ work and

The work has been / has not been carried out as per safety norms , regulations , norms laid down by MCD/DDA/NCD/ANY OTHER statutory bodies. There has not been / has been cause for levy of penalty by MCD/DDA/NCD/ANY OTHER statutory bodies. The amount of penalty has been worked out at Rs.----------.

2.0 The work has/ has not been completed within stipulated time period.

3.0 The debris has been removed from site.

4.0 All safety norms have been complied while carrying out the work.

Regards,

Engineer-In-Charge
AsVP/AVP BYPL

Name, Title & Sign Circle & District

BYPL

SECTION – V (SCOPE OF WORK)

CIVIL WORK: SCOPE & TECHNICAL SPECIFICATIONS (VOL 3.1)

INDEX

PART A: SCOPE OF WORKS....4
3.1.1 Introduction....4
3.1.2 Scope of works....4
3.1.3 General Guidelines....4
3.1.4 Design basis Parameter....6
3.1.5 Detailed Civil scope:....6
3.1.6 Responsibility Matrix....8
PART B: TECHNICAL SPECIFICATIONS....14
3.1.7 Excavation....15
3.1.8 Cast in-situ Concrete....27
3.1.9 Reinforcement....50
3.1.10 Formwork....56
3.1.11 Dry Lean Concrete....63
3.1.12 Pavement Quality concrete (Concrete Pavement)....71
3.1.13 Structural Steel....99
3.1.14 Precast Concrete....108
3.1.15 List of Approved Makes of Material....114
PART *C:* TENDER DRAWINGS....116
3.1.16 Tender Drawings:....117

PART A: SCOPE OF WORKS

3.1.1 Introduction

The Government of the National Capital Territory (NCT) of Delhi has undertaken a range of reforms aimed at promoting the comprehensive development of urban areas across the city. As part of this initiative, the Power Department, Government of NCT of Delhi has initiated a project for the "Conversion of LT Overhead Network to Underground Network and Redressing of LT network in Division Chandni Chowk".

The primary objective of this project is for conversion of the existing Low Tension (LT) overhead electricity network into a safe, reliable, and efficient underground cable system in the Chandni Chowk area, along with the strengthening and reconfiguration of the LT distribution network. Additionally, to provide dedicated underground multiutility ducts to accommodate fire hydrant lines, water supply pipelines, and PNG gas pipelines by using a modernized underground technique. Considering the historical significance and highly congested nature of Chandni Chowk, Delhi, the report recommends the use of Precast Multi-Utility Ducts (MUD). This approach enables faster, safer, and less disruptive installation as compared to conventional methods.

3.1.2 Scope of works

The scope of work includes execution of civil works for storm water drain, manhole chambers, and utility/cable ducts using precast elements, along with associated road dismantling & restoration, as per specifications, drawings, and directions of the Engineer-in-Charge. The contractor shall carry out site survey, setting out, barricading, traffic management, and protection of existing utilities. The work comprises excavation in all types of soil/rock including dressing, dewatering, and disposal; bed preparation with compaction, sand bedding or PCC; providing and laying Dry lean concrete of Grade M10 and Concrete pavement works of Grade M40; installation of precast duct units of Grade M50– 600 x 600mm/ 600 x 900mm, precast storm water drain sections of Grade M50- 600 x 600mm, and manhole chambers including proper alignment, jointing, sealing, and finishing works wherever specified; and providing/fixing precast covers or slabs complete.

The scope also includes backfilling in layers with proper compaction, restoration of roads to original condition including sub-base and surfacing and ensuring proper gradient and connectivity of storm water drainage system. All works shall conform to relevant IS codes and specifications, including quality control testing, safety measures, and site housekeeping. The Bids shall include all labour, materials, tools and plants, machinery, transportation, loading/unloading, leads and lifts, and all incidental works required for completion. The work shall be handed over complete in all respects with as-built drawings and documentation to the satisfaction of the Engineer-in-Charge.

3.1.3 General Guidelines

The contractor shall make arrangements for.

i. Complying with the programme such as staging and / or phasing, access limitations as set out in the Tender Documents.

ii. Strict control to minimize the effects of noise, dust, mud, smoke, fumes, interruption or hindrance of access and other nuisance which could adversely affect the occupants of adjacent areas. CAAQMS (Continuous Ambient Air Quality Monitoring Stations) or Noise Monitoring System shall be installed & maintained by contractor as per DPCC guidelines.
iii. Co-ordination of works between the Contractor, consultant and/or Client.
iv. Rectifying and making good to services disturbed during construction.
v. Provision of keeping the whole site free from rain and percolating water by providing adequate drainage, pumps or other dewatering methods to be approved by Project Manager during the execution of works.
vi. Providing all samples of materials and carrying out tests as required by the Specification.
vii. Obtaining and submitting all guarantees and warranties as specified.
viii. Any items not specifically mentioned in this section but which are included or inferred in the relevant clauses in the Standard Method statement.
ix. Wastages if any for all materials shall be included in the rate.
x. Any costs incurred through employing a construction sequence different to that described in this section / herewith.
xi. Preparation and submission of shop drawings as per requirement of the work.
xii. Quality Assurance and control as appropriate.
xiii. Arrange inspections.
xiv. Cleaning and protection.
xv. Complying with the design criteria.
xvi. Replacing damaged works and leaving the work clean, free from defects and in good condition.
xvii. Inspecting site conditions before the start of work on site, and before delivery of materials to ensure conditions are satisfactory for execution.
xviii. Preparation works and the general protection of utilities, public works.
xix. Providing staging to any height to complete the work.
xx. General protection and cleaning of the completed works before handing over.
xxi. All lead and lifts unless otherwise specified.
xxii. Project specific Safety Guidelines shall be adopted in all the items of work.
xxiii. All Design Mix of concrete shall be approved by BSES Yamuna power Ltd.
xxiv. The contractor is solely responsible for proper, safe handling, removal, and disposal of all C&D debris (concrete, steel, wood, etc.) in compliance with local environmental regulations.
xxv. Rigid, secure and continuous iron minimum height 2.0m barricades must be installed around the entire perimeter of all excavation sites. Name of the Contractor shall be displayed on barricading board
xxvi. Green mesh netting is strictly prohibited for active excavations and can only be used to delineate non-excavated areas.
xxvii. Barricades must be equipped with warning signage and blinking lights, ensuring they are clearly visible at night.
xxviii. Contractor shall comply with all the applicable statutory rules pertaining to factories act (as applicable far the State). Fire Safety Rules of Tariff Advisory Committee. Water Act for pollution control and obtaining forest department permissions for necessary approval prior to tree cutting.

xxix. Plastering on structural members (in fire prone areas) etc. shall be made according to the recommendations of Tariff Advisory Committee.

xxx. Statutory clearance and norms of State Pollution Control Board shall be followed as per Water Act for effluent quality from plant.

xxxi. Use of C&D waste material as per Order DPCC/EC/9311/WMC-11/2014-15/3044-3068 dt. 14.01.2020.

xxxii. Use of fly ash bricks of approved make with minimum cement content 18-20 % ISI marked as per letter no. DPCC/WMC-II/Ash Utilization/2024/3446-3472 dated 09/12/2024 confirming to IS 16720:2018

3.1.4 Design basis Parameter

a) General design standards

1. Design shall comply with relevant provisions of:
   - Indian Roads Congress (IRC SP-13, IRC 5, IRC 6)
   - Central Public Works Department specifications
   - Bureau of Indian Standards codes (IS 456, IS 3370, IS 15916)
2. Precast elements shall be factory manufactured with strict QA/QC
3. Reinforcement steel considerations: 0.15% to .25% of Gross Cross-sectional area. (IS 456)

b) **Structural design parameters**

1. Design for limit state method as per IS 456
2. Load considerations:
   - Dead load + soil load
   - Vehicular load (IRC Class A / 70R where applicable)
3. Factor of safety as per IS codes
4. Checks for:
   - Bending
   - Shear
   - Uplift (in high water table zones)

Note: Joints to be designed for load transfer and water tightness

c) Jointing & Installation

1. Tongue & groove / rebate joints
2. Sealing with: Neoprene rubber seal / polysulphide sealant (Trench cover)
3. Proper bedding: PCC bed (M10–M15), thickness 75–100 mm
4. Alignment and level control mandatory.

3.1.5 Detailed Civil scope:

Construction of following structures/work using high grade precast construction along with covers including excavation (in all type of soil/Rock), backfilling, disposal of C&D waste (Malba) etc.

a) Esplanade Road (Approximate Road Length: 310 Meter & width varies from 15 to 21 Meter, Length and widths are indicative and shall be verified by contractor during site visit before submission of bid).
   a. Utility Duct- Clear size 600 x 900 mm on both side of the road

b. Electric/OFC cable duct- 600 x 600mm on both side of the road
c. Storm water drain- 600 x 600mm on both side of Road, including connections with existing drain/outlet.
d. Utility shifting& restoration of damaged utilities as per site requirement (Electrical, OFC, DJB connections, Sewer line connections and other miscellaneous utilities).
e. Dismantling of Road & Footpaths, Road construction& Restoration of Footpath with Granite (50 mm thick)/ Sandstone (50 mm thick) or as per drawing.
f. Dismantling & reconstruction of Central verge/Kerb.
g. Installation of Sewer inspection chamber and its connection by RCC NP3 Hume pipe to main sewers as per site requirements.
h. Installation of precast for Feeder pillars & street light poles.
i. Installation of chambers for OFC/Utility cables of minimum size 900 x 900 x 1200 at the junctions of cross lanes on both side of the roads.
j. The duct sizes are indicative and same shall be finalised during detailed engineering.
k. Suitable horticulture arrangement in the Central verge.

b) More Sarai Road (Approximate Road Length: 560 Meter & width varies from 7.5 to 11 Meter, Length and widths are indicative and shall be verified by contractor during site visit before submission of bid).
   a. Utility Duct- 600 x 900 mm on one side of the road
   b. Electric/OFC cable duct- 600 x 600 mm on one side of the road
   c. Storm water drain- 600 x 600mm on one side of Road, including connections with existing drain/outlet.
   d. Utility shifting & restoration of damaged utilities as per site requirement (Electrical, OFC, DJB connections, Sewer line connections and other miscellaneous utilities).
   e. Dismantling of Road & Footpaths, Road construction & Restoration of Footpath with Granite (50 mm thick)/ Sandstone or as per drawing.
   f. Installation of Sewer inspection chamber sand its connection by RCC NP3 Hume pipe to main sewers as per site requirements.
   g. Installation of precast for Feeder pillars & street light poles.
   h. Installation of chambers for OFC/Utility cables of minimum size 900 x 900 x 1200 at the junctions of cross lanes on both side of the roads.
   i. The duct sizes are indicative and same shall be finalised during detailed engineering.

   The Precast elements shall be manufactured considering Vehicular load as per site requirement and as per approved drawing.

   Multi Utility Duct/ Cable duct shall be provided with Sump pits at regular intervals. The same to be connected with the nearby Drain/ Sewer to avoid accumulation of storm water.

   The above work shall be performed generally in Night only, with proper barricading on periphery of the construction area. Contractor shall make his own arrangement for their office, storage yard, power supply & construction water.

Any other work & associated cost for obtaining Road cutting permissions, Tree trimming/Pruning, Tree cutting permissions, Traffic diversions, restoration of any property/facilities damaged etc. shall be considered in the contractor's scope of work.
The duct shall have provision for Structural steel (Hot dip galvanized) brackets for laying electrical cable/other utility cable/pipe.

For Crossing the utilities, suitable core cutting shall be required in the ducts same shall be included in the scope.

3.1.6 Responsibility Matrix

S No	Description	Contractor	BSES	Remarks
	Note: Contractor shall be the Single Point of Contact (SPOC) for its scope of works.			
1.00	**PROGRAMME/REPORTING**			
1.01	Testing and Commissioning Programme	✓		
1.02	Integrated Testing and Commissioning Programme	✓		
1.03	Preparation of progress reports (daily, weekly, monthly etc.), updates on the programme, cash flow, forecasts etc. as per Contract/ Sub-contract	✓		
2.00	**INSURANCES**			
2.01	Contractor's All Risk (CAR)	✓		
2.02	Third Party/ Public Liability	✓		
2.03	Workmen's Compensation	✓		
2.04	Plant & Machinery Insurance	✓		
2.05	Marine and transit insurance	✓		
2.06	Shipping/ Customs clearances/ Transit or transportation insurance	✓		
2.07	Motor Vehicles Insurance	✓		
2.08	Local Liaison, first aid tie up with hospitals, any statutory compliance	✓		
2.09	Professional Indemnity	✓		
3.00	**CONTRACTOR DESIGN PORTION**			
3.01	Preparation of design calculations, design drawings, technical submittals and specifications	✓		
3.02	Design co-ordination with relevant consultants	✓		

S No	Description	Contractor	BSES	Remarks
3.03	Contractor to review and check for Contract compliance before forwarding them to Project Manager /Supervision Consultant for approval.	✓		
3.04	Preparation of programme for the design works and milestones	✓		
3.05	Design co-ordination and interface co-ordination before forwarding to Project Manager /Supervision Consultant for approval	✓		
3.06	Input for all As built drawing etc.	✓		
4.00	**SITE OFFICE ESTABLISHMENT**			
4.01	Space for offices	✓		
4.02	Space for site offices/Meeting Rooms and space and facilities for Client and consultant staff.	✓		
4.03	On-site parking facilities and traffic management	✓		
4.04	Transportation of the Client staff including the vehicles (min 2 nos AC Cars) and the drivers.	✓		
4.05	Construction water and Power	✓		
5.00	**STORES/ OTHER FACILITIES**			
5.02	Supply, erection and removal of storage yards, Godown, task specific yard	✓		
5.03	Storage of bulk materials off-site and brought to site as required	✓		
5.04	Laboratory Facility	✓		
5.05	Sampling and testing	✓		
6.00	**Security**			
6.01	Issuance of access passes/ID system for staff, workers and visitors	✓		
6.02	Security of Plant, Storage, Materials, Contractor's Equipment and Temporary Works	✓		
7.00	**Survey**			
7.01	Topography, GPR survey information and Overall Project survey and Videograpy before start of work, during execution work and after completion of works.	✓		
7.02	Further detailing and ensuring correct dimensions	✓		
7.03	Before & after videography of site.	✓		

S No	Description	Contractor	BSES	Remarks
8.00	**LOGISTICS**			
8.01	Traffic Management for vehicular access and pedestrian walkways	✓		
8.02	Transportation of resources (Plant, Materials, Temporary Works, staff, labour) to Site	✓		
8.03	Construction of labour toilet facilities with water connection, septic tank etc. within site premise including Cleaning and maintenance of labour toilet	✓		
8.04	Supply, erection and removal of Labour accommodation outside the site premise	✓		
8.05	Food, snacks, tea, facilities for the labours& staff	✓		
8.06	Transporting labours from labour accommodation (outside premise) to site	✓		
8.07	Prepare and maintain a site logistic plan to identify storage space and temporary office	✓		
8.08	Protection, inventory control, wastage control	✓		
9.00	**SITE TEMPORARY UTILITIES/ FACILITIES**			
9.01	Water supply for Construction activities	✓		
9.02	Drinking water on site	✓		
9.03	Power Supply for Construction Activities (Single & Three Phase as required)	✓		
9.04	Common lighting (General and Safety); including emergency lighting.	✓		
9.05	Task lighting (leads and equipment)	✓		
9.06	Temporary Signage for common areas	✓		
9.07	Special Signage/Subcontractor Signage	✓		
9.08	Collection and Disposal of Construction waste from designated area to be disposed off site (refer Waste Management Annexure).	✓		
10.00	**SAFETY, HEALTH, ENVIRONMENT**			
10.01	Overall HSE management, supervision and implementation of overall safety, health, environment, surveillance and policies of the Works	✓		
10.02	Trade wise supervision and implementation of overall safety, health, environment, and policies of the Works	✓		
10.03	Occupational Health Center/Ambulance Room (As per BOCW) and Disposal of Bio-Medical Waste	✓		

S No	Description	Contractor	BSES	Remarks
10.04	Site safety provisions including, but not limited to, fall protection, safety signage, fire extinguishers, temporary hose reels, etc.	✓		
10.05	Prepare and maintain construction waste management plan, with associated reporting	✓		
10.06	Housekeeping of the site to the satisfaction of Project Manager /Supervision Consultant	✓		
10.09	Execution and compliance of HSE plan and policies	✓		
10.10	Induction, Setting Up Safety Infrastructure and training	✓		
10.11	Risk Assessment of Works	✓		
10.12	Maintaining job specific safety standard at site	✓		
10.13	Supply of standard PPE for staff and workers	✓		
10.14	Handling of Hazardous materials / chemical control	✓		
10.15	Pest control (site offices, storage facilities and Project Premise including Labour Colony)	✓		
10.16	Tree trimming/pruning wherever required with prior permission from local Authority/Forest department. Where the trees need to be cut/transplanted with prior permission from the concerned local Authority, compensatory plantation in the ratio of 1:10 (i.e. planting of 10 trees for every 1 tree that is cut/ non-survival of any transplanted tree) shall be done and maintained. Plantations to be ensured species (cut) to species (planted).	✓		
10.17	Obtaining Road cutting permissions from other civic agencies, Traffic police permissions/ Intimation and coordination with other civic agencies.	✓		
10.18	Provision of Artificial Ventilation	✓		
11.00	**Plant & Machinery**			
11.01	The Contractor shall provide all P&M to complete his scope of work	✓		
11.02	Mobile cranes / crawler cranes	✓		
11.04	The Contractor shall provide all Operator and flagmen for above defined four activities and shall provide crane co-ordinator, lift managers and supervisors.	✓		
11.05	Load / weight confirmation prior to delivery of materials	✓		

S No	Description	Contractor	BSES	Remarks
11.06	Secure and safe slinging, hoisting and offloading	✓		
11.07	The provision of all temporary access already fixed or placed in position on the site for the use of workmen and the delivery of materials	✓		
11.08	Delivery schedules	✓		
11.09	Unloading of materials including mechanised unloading	✓		
11.10	Distribution of materials from offloading platform to work location	✓		
11.11	All permission for execution of works	✓		
12.00	**SCAFFOLDING & ACCESS**			
12.01	Access equipment and scaffolding in with working platform	✓		
13.00	**QA / QC / PROJECT CLOSE OUT**			
13.01	Coordination, management, supervision, implementation and auditing of overall QA/QC Plan and Policies of the Works	✓		
13.02	Maintaining the QA/QC plan and policies of the Subcontractor's scope of works in accordance with the Contractor's Policies and Procedures	✓		
13.03	Product Samples, Data, Testing Certificates etc. submission	✓		
13.04	Preparation of Method Statements	✓		
13.05	Inspection Test Plans	✓		
13.06	Preparation of Shop Drawings	✓		
13.07	Mock-ups, tests and related cost inclusive of accommodation, meals, local transportation and overseas travel where necessary	✓		
13.08	Preparation of snagging list and de-snagging of all defects before Taking Over of each Section and the Whole of the Works	✓		
13.09	"Red Line" markup drawings for variations	✓		
13.11	Preparation of O&M Manuals	✓		
13.12	Warranties	✓		
13.13	Training of Client/ Operator's Staff	✓		
13.14	Project Close out documentation	✓		
14.00	**PROTECTION AND MAINTENANCE**			

S No	Description	Contractor	BSES	Remarks
14.01	Protection and maintenance of respective works up to the issue of Taking Over Certificate for the Contract Works as a Whole or for Sections of the Works	✓		
15.00	**Payment Application**			
15.01	Preparation of RA bills	✓		
15.02	Bill Certification		✓	
15.03	Other supporting documentation for billing	✓		
16.00	**Execution**			

PART B: TECHNICAL SPECIFICATIONS

3.1.7 Excavation

3.1.7.1 Subsurface Investigation

3.1.7.1.1 General

Contractor shall be deemed to have visited the site prior to submitting his Bid and made all necessary inspection and investigations and to have decided for himself the means of access and working space, the nature of the ground and subsoil, if any, level of water table, extent of rock demolitions, alterations, support of neighboring properties, etc.

3.1.7.1.2 Related work

a) Clearing, grubbing, removing all vegetation from the site.
b) Excavations include getting out, and necessary dressing to make surface ready to receive blinding.
c) Filling and back filling and compaction of fills
d) Removal and disposal of surplus material.
e) Stone soling to roads and paving.

The contractor shall provide all labours, equipment, materials and any incidentals necessary to complete all aspects of work included in the drawings and specifications.

3.1.7.1.3 Applicable Standards:

The following standards shall be followed:

a. IS: 3764-1966 Safety Code for Excavation Work.
b. IS: 1498-1970 Classification and identification of soils for general engineering purposes.
c. British Standard 1377-Methods of test for Soils for Civil Engineering Purposes.
d. British Standard 5930- Code of Practice for Site Investigations.
e. SP27 Handbook of method of measurement of building works.
f. Local Building Regulations and Statutory Regulations.

3.1.7.1.4 Definitions

Clear: The removal of trees, scrub and artificial obstructions including fences, concrete slabs, kerb and channel, remains of old buildings and the like.

Grub: The removal of tree stumps and roots.

Topsoil: Topsoil is all surface soils, which have sufficient humus to support plant growth without resort to artificial fertilization.

Cut: A general term for 'in place' material removed by digging from the ground. The term 'excavation' or derivatives thereof may be used interchangeably.

Fill: A general term for material spread and compacted over the ground to make up finished levels or levels to sub-grade. The term 'Embankment' or derivatives thereof may be used interchangeably.

Sub-Grade: The finished, trimmed and prepared surface of the earth works after completion of all cut and fills operations. The term 'formation level' or derivatives thereof may be used interchangeably.

Sub-Base: A selected filling layer spread and compacted over the sub-grade to make up levels to the underside of the base course or floor slab.

Base course: A selected filling layer spread and compacted to levels immediately below road wearing course.

Spoil: Excess cut material remaining at the end of filling operations.

Bulk Earthworks: Earthworks to create, by excavation and/or filling and compacting, building platforms, road formations, parking areas, reservoir, embankments, drainage canals or any other formation where the unimpeded use of large earthmoving equipment is possible. This is distinct from backfill of trenches, foundations or other earthworks immediately adjacent to completed or partially completed structures.

3.1.7.2 Site Preparation

3.1.7.2.1 **Site Inspection - Preamble**

Any Site details or site information included in the contract documents or Drawings are provided for the Contractor's guidance only. The information provided may not be a complete or accurate description of conditions existing below the surface of the ground. The correctness of the information is not guaranteed and the contractor shall be responsible to make its own interpretation of sub-surface conditions.

The contractor shall visit the site, examine the boreholes, and decide for himself the nature of the ground and the subsoil to be excavated. No claim for extra payment will be entertained because of any misunderstanding, incorrect information, assumptions, or ignorance of existing conditions.

3.1.7.2.2 **Site Quality Control**

The contractor shall provide in his quality assurance programme information to show that a system will be used to ensure that all works carried out under this section (including any done by subcontractor) will comply with all the requirements of this section.

3.1.7.3 Antiquities

Any ancient carvings, relics, coins or other curiosities discovered during the excavation or other work shall remain the property of the owner and shall be handed over to the owner as required under the General Conditions of Contract.

3.1.7.4 Setting Out and Clearing of the Site

The contractor shall set out the centre line of the building or other involved works after clearing the site and get the same approved from Project Manager. It shall be the responsibility of the contractor to install substantial reference marks, bench marks etc and maintain them as long as required by the Project Manager. The contractor shall assume full responsibility for proper setting out, alignment, elevation and dimension of each and all parts of the work.

3.1.7.5 Benchmarks and Setting Out

The contractor shall engage a qualified surveyor to establish permanent benchmarks in suitable locations around the site. These benchmarks shall enable the contractor to set out the location of all buildings, paths, roads, utility lines, storm water drains and all other portions of the Contract work.

If an error in setting out causes some portion of the work to be constructed in the wrong location, or to the wrong dimensions, the contractor shall make good the incorrect work at his own expense to the satisfaction of the Project Manager. The contractor shall be liable for any consequential loss experienced by the Client.

3.1.7.6 Excavation Classification

The earthwork shall be classified under the following categories and measured separately for
each category:

a) All kind of soils: Generally any strata, such as sand, gravel, loam, clay, mud, black cotton
moorum, shingle, river or nallah bed boulders, siding of roads, paths etc. and hard core,
macadam surface of any description (water bound, grouted tarmac etc.), lime concrete mud
concrete and their mixtures which for excavation yields to application of picks, showels, jumper,
sacrifiers, ripper and other manual digging implements.

b) Ordinary rock: Generally any rock which can be excavated by splitting with crow bars or picks &
does not require blasting, wedging or similar means for excavation such as lime stone, sand stone,

hard laterite, hard conglomerate and un-reinforced cement concrete below ground level.
If required light blasting may be resorted to for loosening the materials but this will not in any
way entitle the material to be classified as 'Hard rock'.

c) Hard rock: Generally any rock or boulder for the excavation of which blasting is required such
as quartzite, granite, basalt, reinforced cement concrete (reinforcement to be cut through but
not separated from concrete) below ground level and the like.

d) Hard rock (blasting prohibited): Hard rock requiring blasting as described under (c) but where
the blasting is prohibited for any reason and excavation has to be carried out by chiseling,wedging, use of rock hammers and cutters or any other agreed method.

3.1.7.7 **Method of Excavation**

If the excavation is carried out to a greater depth than specified, extra depth shall be made up by filling with lean concrete in a ratio of 1:4:8 (1 cement: 4 coarse sand: 8 stone graded aggregate of 40 mm size) as directed by the Project Manager. The cost of such extra excavation and of the filling therein as specified, shall be borne by the Contractor. No extra claims whatsoever will be entertained in this regard. The bottom of excavation shall be trimmed, leveled, rammed and sides dressed and trimmed in accordance with the drawings/directions of the Project Manager. The Contractor shall ensure that excavation is to be carried out as indicated on the drawings with sufficient working space to permit erection of forms, shoring, inspection of foundations and any other activity likely to be carried out below ground level. All ramps for excavation except one will be cleared before completion (unless specifically noted otherwise) and made good before final completion. One ramp as directed by the Project Manager will be left to enable access for the other Contractor. Contractor shall advise Project Manager when excavation is ready to receive concrete. No concrete shall be placed in foundation until the Contractor has achieved Project Manager's approval that a secure foundation has been prepared.

The Contractor shall ensure proper methods are adopted to control the creation of Dust. Method adopted shall be approved by the Project Manager.

3.1.7.8 **Excavation and Preparation for Concreting:**

Excavation shall include removal of all materials of whatever nature at all depths and whether wet or dry necessary for the construction foundation and substructure (including mass excavation for under ground reservoir where applicable) exactly in accordance with lines, levels grades and curves shown in the drawing or as directed by the Project Manager. The bottom of excavation shall be leveled both longitudinally and transversely or Sloped as directed by the Project Manager.

Should the contractor excavate to a greater depth or width than shown on the drawings or as directed by the Project Manager he shall at his own expense fill

the extra depth or width in cement concrete in proportion as directed by the Project Manager but in no case with concrete of mix leaner than 1:4:8 cement concrete.

The contractor shall report to the Project Manager when the excavations are ready to receive concrete. No concrete shall be placed in foundations until the contractor has obtained Project Manager approval in case, the excavation is done through different strata of soil and if the same is payable as per provision in the Schedule of Quantities the Contractor shall get the dimensions of the strata decided by the Project Manager for payment. If no specific provisions are made in the Schedule of Quantities it will be presumed that excavation shall be in all types of soil and other material and the Contractor's rate shall cover for the same.

After the excavation is passed by the Project Manager and before laying the concrete, the contractor shall get the depth and dimensions of excavation and levels (and nature of strata as applicable as per Schedule of Quantities like hard rock, soft rock etc) and measurements recorded from the Project Manager. Excavated pit should have adequate clearance from the face of concrete at all faces to have adequate working space.

3.1.7.9 **Stacking of Excavated Materials:**

All materials excavated will remain the property of the Project Manager and rate for excavation including sorting out of useful materials and stacking them on site as directed but with a safe distance from the edge of excavation to avoid collapse/ shielding of excavated area. Materials suitable and useful for back filling, plinth filling or leveling of the plot or other use shall be stacked in convenient place but not in such a way as to obstruct free movement of men, animals and vehicles or encroach on the area required for constructional purposes.

3.1.7.10 **Disposal / Carting of Surplus Earth**

Top layer of hard soil free from vegetation, spoils, rocks, boulders for a quantity of approximately 15% of the total excavated earth quantity shall be stocked at locations as directed by the Project Manager for re-use up to a distance of 300m from the periphery of the buildings. The remaining excavated earth, except for the hard rock excavated, shall be disposed off including lifting out, transportation to locations approved by local bodies, Government agencies or as directed by the Project Manager, as the case may be.

The Contractor is responsible for finding suitable dumping yard and for the removal of all sub grade obstructions, whether indicated or not, wherever it is likely to interfere with execution and completion of the Project is deemed to be included in its rates.

All surplus and unusable earth shall be carted out and disposed off outside the Site but at a location approved by local authority and confirming to their specifications. The Contractor shall quote its rate for disposing off or carting

away the item considering requirements and standards of the local authority with whose permission surplus and unusable earth shall have to be disposed off.

3.1.7.11 **Dewatering:**

Rate for excavation shall include bailing or pumping out which may accumulate in the excavation during the progress of work either from seepage, rain water or any other cause and for diverting surface flow, if any by bunds or other means. Pumping out water shall be done in such approved manner as to preclude the possibility of any damage to the foundation trench, concrete or masonry or any adjacent structure inside or outside the wall front. When water is met in foundation trenches or in tank excavation, pumping out water shall be from auxiliary pit of adequate size dug slightly outside the building excavations. The depth of auxiliary pit shall be more than the working foundation trenches / levels. The auxiliary pit shall be refilled with approved excavated materials after the dewatering is over.

The Contractor shall adopt an appropriate method of dewatering work and shall submit its proposal for carrying out the dewatering work for the approval of the Project Manager. The water shall be pumped continuously to keep the water level at a minimum of two 2' (feet) below the lowest point of excavation level. The operation shall be continued until the entire excavation has been completed so as to ensure the excavation is always dry.

- Adequate number of pumps shall be deployed to ensure a continuous dewatering process.
- Power / Fuel required for the operation of pumps etc shall be provided and paid for by the Contractor.

Softening of the bottom of excavation will not be allowed. If softening occurs due to weather or any other source, the Contractor shall remove the affected area and replace as specified and directed by the Project Manager at no extra cost.

Necessary grading, trenching and temporary sumps shall be made around excavations as required to prevent water runoff into excavation and to ensure proper protection to slopes from erosion.

The excavation shall be kept free from water:-

a) During inspection

b) From start to completion of concreting till they come above existing ground.

c) Till the Project Manager considers that the concrete is sufficiently set.

d) Till the underground reservoir is tested for water tightness.

3.1.7.12 **Shoring and Strutting**

The Contractor shall uphold the faces of excavation work to retain the earth, if required, at locations where considered necessary. Shoring and strutting shall be

erected depending on nature of soil and the work. The arrangement of shoring and strutting including sizes and spacing of member used shall be approved by the Project Manager. All such necessary work, including but not limited to making / preserving / maintaining adequate slopes, necessary precautions, etc for ensuring safety of workmen below natural ground level shall be the responsibility of the Contractor. No extra charges shall be admissible on this account. Similarly the Contractor shall be responsible to protect the bottom of excavation from weather.

3.1.7.13 **Protection**

The excavated area shall be surrounded by strong barricaded safety barriers made of Steel Barricades shall be erected to a height of 2.0 m all around the excavation with reflective tapes and necessary lighting at night all as shown on drawings. The Contractor shall take all necessary measures for the safety of the excavation, persons working, tools and plants working in and near the excavation pits, property and people in the vicinity.

Protection and maintenance of all benchmarks axis points and other similar reference points if disturbed and/ or damaged, to be replaced by the contractor at no extra cost to the Developer.

Location of existing utility lines; if shown on the drawings, is only approximate and only for interpretation. The Contractor shall be responsible of their protection during the duration of the contract without causing any damage, dislocation, injury and/ or interruption to these utility services. If so, to be replaced/ restored to their original status at the contractor's own cost.

All the temporary roads, constructions etc shall be made and maintained according to the provisions of this contract and as per the instructions of the Project Manager upon the completion of this contract, the contractor shall remove after getting the approval from the Project Manager all such temporary roads, structures, etc. and restore the area in its original condition without any extra cost.

3.1.7.14 **Surplus Excavated Materials**

All excavated materials certified as surplus and not useful shall be removed by the contractor from the site in an approved manner to his own dump and shall be paid as a separate item as in the Schedule of Quantities.

The item of removal of surplus excavated material shall only be undertaken by the Contractor when specific instruction in this regard has been obtained from the Project Manager. The contractor must also secure the approval of the Project Manager. Regarding the quantity of surplus materials to be removed prior to commencement of this item of work.

3.1.7.15 **Earthwork - Fills**

3.1.7.15.1 **General filling:**

1. Deposit in horizontal layers not exceeding 300 mm thick before compaction.

2. Where material is dry, wet each layer to its optimum moisture content for compaction purposes.
3. Where material is wet, delay compaction and placement of additional fill until optimum moisture content is attained.

3.1.7.15.2 **Water**

- Water used for compacting fill or for washing crushed stone shall be clean and free from oil, grease, organic matter, suspended sediments and other deleterious substances.

3.1.7.15.3 **Adjacent excavations:**

- Where an excavation encroaches below a line drawn at an angle of 60 Deg. from the horizontal from the nearest formation level of another higher excavation, the lower excavation, all work within it and backfilling thereto shall be completed before the higher excavation is done.

3.1.7.15.4 **Excavated formations:**

1. In made up ground excavate foundations down to a natural bearing formation of undisturbed subsoil, unless otherwise instructed.
2. Obtain instructions if a natural bearing formation of undisturbed subsoil:
   - Is obtained at a lesser depth than shown on the Drawings.
   - Is not obtained at the depth shown on the drawings.
3. If, after inspection, formation becomes unsuitable for any reason, excavate further and backfill with approved material all at the Contractor's expense.

3.1.7.15.5 **Treatment of formations generally:**

1. Trim excavations to required profiles and levels.
2. Remove all loose material.

3.1.7.15.6 **Excess excavation:**

1. Backfill any excavations taken wider or deeper than required with mass concrete.
2. Where such excess excavation is carried out without approval, necessary extra backfilling shall be at the Contractor's expense.

3.1.7.15.7 **Compaction Requirement**

The required compaction of fills which are deemed to be part of bulk earthworks shall be achieved by a minimum number of passes of compaction plant. This plant shall unless the Project Manager specifically allows in writing, include type

a) For primary compaction, and may include either or both types.
b) Of the following listed types for the final compaction of the surface.

1 Vibratory roller of either double or single vibrating drum of not more than 3.2 tonne mass per metre of roll width having a vibration frequency of not less than 37 Hz. Vibrating roller not exceeding the above weight limit but of frequency less than 37 hz are approved providing the nominal amplitude does not exceed that shown relative to the weight in tones per meter roll width in figure1 any other vibrating roller specifically approved by the Project manger. Vibrating rollers of less than 1 tonne per metre of roll width shall not be used to compact any layer of fill of more than 175mm of un-compacted thickness.

2 Three wheel steel- tired rollers having rear rolls each at least 0.50m wide and having not less than 4.5 tonne per metre of roll width.

3 Pneumatic tyred roller having a minimum weight when operating of not less than seven tonne, spread over at least seven pneumatic tyred wheels.

Figure 1

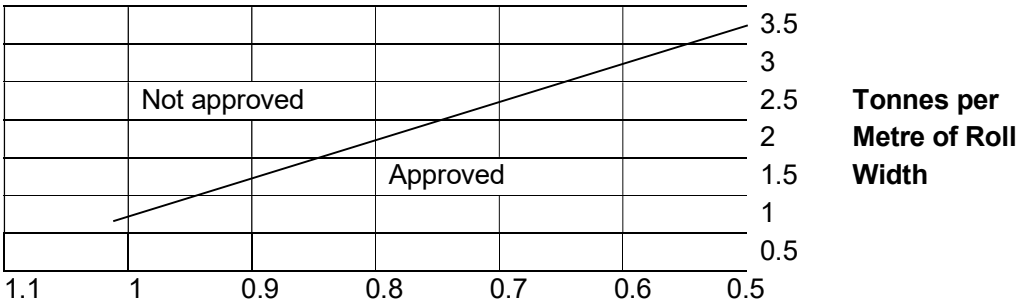

For filling in inaccessible places or against structures, hand tamping or small vibratory compaction equipment may be used with the approval of the Project Manager.

Care must be taken during compaction to ensure that no gaps are formed between adjacent layers.

Fill material shall be compacted to attain the densities as called for in the specifications.

As filling proceeds, test to verify the compaction being achieved shall be conducted. Tests shall be done at a minimum frequency no less than one test per 150 cum. of fill volume. Testing locations shall be distributed evenly throughout the fill volume and each layer area. The locations shall be to the

satisfaction of the Project Manager and copies of the results of all tests shall be submitted to them whether successful or not.

In the event that tests do not verify the minimum compaction requirements, the whole of the area for which the test is representative shall be reworked and retested, unless otherwise directed by the Project Manager.

Where the Project Manager is of the opinion that a specific area within an embankment cannot compact to the specified density, he shall order alternative improvement works.

The following references shall be used to confirm compliance:

Sampling	BS 5930 (or as updated), IS 2720
Field Dry Density:	BS 1377: 1975 Clause 4.4 Test 15 (or as updated) "Determination of the dry density of soil on the site – Sand replacement test"
Standard Maximum Dry Density:	BS 1377: 1975 Clause 4.1 Test 12 (or as updated) "Determination of dry density / moisture content relationship" using 2. Kg rammer
Moisture Content:	BS 1377: 1975 Clause 2.1 Test 1 (or as updated)

'Determination of the moisture content – Standard"

1. Remove all suitable and excess material from areas to be filled.
2. Surface of ground with a gradient exceeding 1 in 5, which is to receive filling must have horizontal benches cut to match the depths of compacted layers of filling.
3. Do not place fill until the formation has been inspected by the Project Manager. Give the Project Manager at least 24 hours notice of when formations will be ready for inspection.

Compact filling after grading and leveling surfaces. Compact filling in layers, adding any necessary extra fill and water, to attain the minimum dry densities as tabulated in the table appended at the end of this Section.

Backfilling and compaction shall be undertaken under full-time presence of the Contractor's Supervisor, and each layer shall be got checked by the Project Manager. Further layers are not to be placed without the approval of the Project Manager.

Compact filling using vibratory plate, roller or other approved (mechanical) equipment, making the required number of passes with the equipment to obtain specified densities. Each trip of equipment shall overlap the previous trip by 500mm.

If selected earth kept aside as per the provisions of the Clause 3 / 2.110 is not sufficient for the back filling, the contractor, with its own cost, shall bring in good quality earth, murrum etc. from borrow pits, either approved at the site and/ or elsewhere by the Project Manager. The cost of developing and reinstating the

same after use as per the directions of the Project Manager and/or local laws prevailing for such borrow pits, loading, transporting and re-handling of earth/ murrum etc. deemed to have been included in its rates by the Contractor.

The Contractor at its own cost rectify and / or restore the damage (s) occurred due to improper backfill and compaction done by it.

If any settlement occurs due to improper backfill and compaction and/ or cracks developing in the sub-structure/ super structure works due to the same, the Contractor shall make good its damages/ defects at no extra cost to the Developer.

The Contractor at its own cost protect by bracing the basement walls till the proper back filling and compaction are completed with the satisfaction of the Project Manager and complying with the conditions of the Contract and Technical Specifications. The Contractor shall also undertake and execute the patching of the basement wall after removal of such bracing at no extra cost.

All the back filling and compaction works shall be of acceptable standard to both the Project Manager and the Structural Engineer.

The Contractor shall include in its rates the cost of removal of debris/ rubbish etc. from the bottom of the basement wall prior to back filling.

Schedule:

Curve No. 1: To be referred.

Table for compaction requirements

Fill Materials	**Min. Passes**	**Min. Energy***	**Min. Compaction**
General Fill	3	4550 Kg	90%
Structural Fill:			
Confined spaces	4	1150 Kg	95%
Open spaces	3	4450 Kg	95%
Crushed stone:			
Confined spaces	4	1150 Kg	-
Open spaces	3	4450 Kg	-
Catch	3	4450 Kg	95%

Notes:

1. Forces applied for compaction shall be dynamic or impact loads.
2. Specified percentages of compaction shall be related to the maximum dry density at the optimum moisture content as established by and verified on site by.
3. Correct field density to account for stone material larger than 19 mm in accordance with suggested methods.

3.1.7.16 **Back Filling and Compaction :**

Filling shall be done with approved quality of selected earth from the provisions and or borrowed from the approved locations free from roots, grass, organic materials, spoils, rubbish and lumps and clots exceeding 8 cm in any direction shall be broken down. Filling shall be done layers not exceeding 30 cm at a time. Each layer shall be watered with optimum moisture content to achieve 90% consolidation. Consolidation shall be done with mechanical rammer or roller of minimum half-ton weight. Where roller cannot work, wooden or steel rammer of seven to ten kg weight with back of 20 cm diameter should be used.

Contractor shall not fill over any work until it is approved by the Project Manager.

If selected earth kept aside as per the provisions is not sufficient for the back filling, the contractor, with its own cost, shall bring in good quality earth, murrum etc. from borrow pits, either approved at the site and/ or elsewhere by the Project Manager. The cost of developing and reinstating the same after use as per the directions of the Project Manager and/or local laws prevailing for such borrow pits, loading, transporting and re-handling of earth/ murrum etc. deemed to have been included in its rates by the Contractor.

The Contractor at its own cost rectify and / or restore the damage (s) occurred due to improper backfill and compaction done by it.

If any settlement occurs due to improper backfill and compaction and/ or cracks developing in the sub-structure/ super structure works due to the same, the Contractor shall make good its damages/ defects at no extra cost to the Developer.

The Contractor at its own cost protect by bracing the basement walls till the proper back filling and compaction are completed with the satisfaction of the Project Manager and complying with the conditions of the Contract and Technical Specifications. The Contractor shall also undertake and execute the patching of the basement wall after removal of such bracing at no extra cost.

All the back filling and compaction works shall be of acceptable standard to both the Project Manager and the Structural Engineer.

The Contractor shall include in its rates the cost of removal of debris/ rubbish etc. from the bottom of the basement wall prior to back filling.

3.1.7.17 Soling used as sub-base

Soling shall be constructed under road/precast concretestructure and other areas where shown in the drawings.

3.1.7.17.1 **Soling Materials**

The size of stones to used soling shall not be more than 120mm, nor less than 50 mm when measured in any direction, and their height shall be equal to the proposed soling course depth of 75mm +/-25mm.

3.1.7.17.2 Preparation of the Sub-grade before laying soling

The top level of the sub-grade shall be lower than the level of the underside of the floor or other structure, to be built over it, by a distance equal to the combine depth of soling and metalling (due allowance being made for consolidation). The depth of the soling shall be 75mm but to achieve this finished depth, an initial loose layer of approximately 100mm will be necessary.

3.1.7.17.3 **Laying and packing the soling stones**

A layer of sand or small size gravel 50mm thick shall be spread and consolidated on the sub-grade surface prepared

The stones for soling shall be of a height equal to the required thickness of soling. Their length or breadth shall not be greater than twice the soling thickness. This means that the stones would pass through a ring 180mm in diameter but not a ring 100mm in diameter.

Soling stone shall be hand packed as close as possible with their broadest side downward and greatest length across the road. Gauge pegs shall be driven at close intervals to indicate the required thickness of the soling. The joints between stones shall be placed at the edges of the area to be covered. All interstices between stones shall be wedged in with smaller stones, well driven into achieve tight packing and complete filling of the interstices.

3.1.7.17.4 **Consolidation of the soling**

The soling shall be thoroughly consolidated with mechanical rollers of 8 to 10 tonne weight starting at the edges and working towards the center. If the soling is to have a cross fall the rolling shall commence at the lowest edge and work over and up to the upper edge. Rollers shall pass over the same surface at least 8 times to ensure that the soling is well consolidated. The top surface shall be checked frequently to make sure that it conforms to the design grade and level.

Vibratory compactors may be used, if approved by the Consultants / Project Manager instead of mechanical rollers. For areas where access is difficult or restricted heavy hand rammers and hand rollers may be used if approval for this has been obtained from the Consultants / Project Manager.

3.1.8 Cast in-situ Concrete

3.1.8.1 **Related Work**

a. Concrete Formwork
b. Concrete Reinforcement
c. Concrete Finishing

d. Sealants

3.1.8.2 **Applicable Standards**

IS - 299	Specification for Ordinary, rapid hardening and low heat Portland
IS - 455	Cement
IS - 1489	Specification for Portland blast furnace slag Cement
IS - 4031	Specification for Portland pozzolona Cement
IS - 650	Method of physical tests for hydraulic Cement
IS - 383	Specification for Standard sand for testing of Cement
	Specification for Coarse and Fine aggregate for use in mass concrete
IS - 515	Specification for natural and manufactured aggregate for use in mass concrete.
IS - 2387	Method of test for aggregates for concrete.
IS - 516	Methods of test for strength of concrete.
IS - 1199	Methods of sampling and analysis of concrete
IS - 3025	Methods of sampling and test (physical and chemical) for water used in industry.
IS - 2645	Specification for integral cement water proofing compounds
IS - 1791	Specification for batch type concrete mixers
IS - 2438	Specification for roller pan mixer
IS - 2505	Specification for concrete vibrators, immersion type
IS - 2506	Specification for screed board concrete vibrator
IS - 2514	Specification for concrete vibrating tables
IS - 3344	Specification for pan vibrators
IS - 4656	Specification for form vibrators
IS - 2722	Specification for portable swing weigh batchers for concrete (single & double bucket type)
IS - 456	Code of practice for plain and reinforced concrete
IS - 1343	Code of practice for prestressed concrete
IS - 457	Code of practice for general construction of plain and reinforced concrete for dams and other massive structures.
IS - 3370	Code of practice for concrete (Part I to IV structures for storage of liquids
IS - 3935	Code of practice for composite construction
IS - 3201	Criteria for design and construction of precast concrete trusses.
IS - 2204	Code of practice for construction of reinforced concrete shell roof.
IS - 2210	Criteria for the design of R.C. shell structures and folded plates.
IS - 3558	Code of practice for use of immersion vibrators for consolidating concrete
IS - 3414	Code of practice for design and installation of joints in buildings
IS - 2571	Code of practice for laying insitu cement concrete flooring

3.1.8.3 **Definitions**

a. Water / Cement Ratio:

The ratio by weight of water to cement in a mix expressed as a decimal fraction. Water being that which is free to combine with cement, including free water in aggregate but excluding that.

b. Hot Weather:

Shade air temperature of 37° C and higher.

3.1.8.4 **Quality Assurance**

a. Supervising staff shall have qualifications and experience specified in the contract.
b. The following tests shall be carried out by the approved agency:
   i. Testing preliminary test cubes;
   ii. Testing work test cubes;
   iii. Testing in situ concrete at site by hammer test, ultrasonic tests and core tests.
c. Standards:
   Comply with the following codes, specifications and standards and as shown on the drawings.
   i. IS 456: 2000 - Specifications for plain and reinforced concrete.
   ii. IS 269:1976 or latest amendment - Specifications for ordinary and low heat Portland cement.

3.1.8.5 **Submittals**

Samples:
Slide bearings

3.1.8.6 **Materials**

3.1.8.7 **Quality**

All materials used in the works shall be of best quality of their respective kind as specified herein, obtained from suppliers and sources approved by the Structural Consultant and shall comply strictly to tests instructed by the Structural Consultant / Project Manager, and where tests are not laid out, with the requirements of the latest issue of the relevant Indian Standard.

3.1.8.8 **Test Certificate**

All manufacturer's test certificates, proof sheets, etc showing that the materials have been tested in accordance with the requirements of the specification and of the approved Indian Standard(s) are to be supplied free of charge on request to the Project Manager.

3.1.8.9 **Cement**

Cement shall be of Portland type and shall comply of IS: 269. The cement used shall be of approved manufacture and the sources of supply shall not be changed without approval of the Consultants / Project Manager.

It shall be received in bags of 50 kg each confirming to IS 2580-1982 IS 11652-1986 or IS-11633-1986 or IS-12174-1987. The bags shall be marked with the manufacturer's name or its registered trademark, if any, type of cement and grade legibly and each batch shall be accompanied by a Test Certificate from the factory.

Samples shall be taken immediately on receipt of cement at about one sample per 1000 bags. Tests shall be carried out on fineness, initial and final setting time and compressive strength as per IS:4031 and result verified by the Project Manager before use in the permanent works. Samples shall be taken immediately on receipt of cement at site. Sampling shall be as per IS 3535.

Stacking and Storage of Cement

Cement shall be stored in such location so as to prevent deterioration due to moisture. A dry and waterproof shed called as "cement godown" shall be best suited for this. Bags shall be stacked on rigid waterproof platforms about 15 to 20 cm clear above the floor. Flooring of the shed shall consists of the two layers of dry bricks laid on a well consolidated earth to avoid contact of cement bags with the floor. It shall also be 35 to 45 cm clear from the surrounding walls. A maximum high stack of Ten (10) bags is permitted. The bags, shall be arranged in header and stretcher fashion. Stacks shall be so arranged that the first batches are used first, and so that they permit easy access for inspection and handling.

The size and dimensions of the cement godown shall got to be approved, before its construction, from the Project Manager.

For extra safety during monsoon, or when cement is expected to be stored for an unusually long period, each stack shall be completely enclosed by a waterproofing membrane, such as polyethylene which shall cover the top of the stack. Care shall be taken to see that the stored cement is not damaged at any time during the use.

Storage of the cement at the Site shall be at the Contractor's expense and risk. Any damage occurring to cement due to faulty storage in the cement godown or on account of negligence on its part, shall be the liability of the Contractor.

3.1.8.10 **Aggregate**

a. To be crushed naturally occurring materials conforming to IS: 383-1970. All physical properties and grading parameters must conform to this code.
b. Aggregate, 95% of which shall be retained on 4.75 mm test sieve.
c. Aggregate shall be from crush granite, quartzite, trap, and basalt quarries.
d. Free from soft friable thin porous laminated or flaky pieces.
e. Free and clean from dust and foreign matters, namely injurious amounts of disintegrated pieces, alkali, vegetable matters and other deleterious substances.

f. Shall be chemically inert when mixed with cement.
g. The aggregate shall not contain any material that will attack the reinforcement. The maximum quantities of deleterious materials in coarse aggregates shall not exceed the limits laid down as per IS:2386 (Part I & II)
h. Shall be angular in shape
i. Maximum size of the aggregate shall be 20mm.
j. Shall have a minimum Specific gravity of 2.6(Standard surface dry basis)
k. When stone aggregate or gravel is brought to the site single sized (ungraded), it shall be mixed with single sized aggregates of different sizes in the proportion to be determined by the field tests to obtain graded aggregate or specified nominal size. The Contractor is deemed to have included the cost for above in its rates.

Course aggregates shall be measured in stacks and adjustment shall be made by deducting seven and half (7.5) per cent of gross measurements of stacks in respect of aggregate of nominal size 40 mm and above. No deduction from the gross measurements of the stacks is to be made in respect of aggregates of nominal size below 40 mm.

Course aggregates brought to site shall be washed clean if required and as directed by the Project Manager.

3.1.8.11 **Fine Aggregate**

a. Shall be washed dry sand and shall confirm to IS: 383-1970 between Grading Zone I and II for structural concrete.
b. Shall pass through IS sieve 4.75mm test sieve leaving a residue not more than 5%
c. Shall not contain any traces of silt, and the sand shall be thoroughly washed with water so as to bring the percentage of silt content within the prescribed limit. Nothing extra is payable to Contractor on this account.
d. Fine aggregates shall be so stacked as to prevent dust and foreign matter getting mixed up with it as far as practically possible.
e. Since fine aggregates bulk to a substantial extent when partially wet, measurements shall be taken when the stacks are dry or an appropriate allowance has been made for bulking.

3.1.8.12 **Water**

a. Water for mixing shall be from potable supply system or from bore well supply.
b. Water for curing shall be from potable supply or from bore well supply.
c. Water shall be tested in accordance with IS:3025-1986. Maximum permissible limits of deleterious materials in water shall be as given in IS:456-1978.
d. The pH value of water shall not be less than 6 and more than 9.
e. Water which may erode or discolour concrete or which has got more than 1000 ppm of chloride content shall not be used.

f. The Contractor shall make its own arrangements for storing of water if necessary in drums, tanks or cisterns to the satisfaction of Project Manager. Care shall be taken to ensure that water is not contaminated anyway.

3.1.8.13 **Expansion and Contraction Joints**

a. Joint filler shall be Bitumen impregnated shalitex board 25mm for expansion joint.
b. Poly sulphate based joint sealants shall be provided in expansion joint.
c. Sliding type neoprene bearing pad of structural grade for expansion joints.

3.1.8.14 **Miscellaneous**

a. Chemical curing compound of approved make to form a membrane or surface which will disintegrate and flake from that surface over a period of days commencing at least 7 days after application.
b. Vapour barrier and separation layer to underside of concrete slab, as and when necessary, and grade 10 mil (.25 mm) thick polyethylene sheets with laps 100mm on sides and ends.

3.1.8.15 **Proportioning, Batching & Mixing of Concrete**

Proportioning

a. Aggregate

The proportions, which shall be decided by conducting preliminary tests shall be by weight. These proportions of cement, fine and coarse aggregates shall be maintained during subsequent concrete batching by means of weight batchers conforming to I.S. 2722 capable of controlling the weights within one percent of the desired value. Except where it can be shown to the satisfaction of the Project Manager that supply of properly graded aggregate of uniform quality can be maintained over the period of work, the grading of aggregate shall be controlled by obtaining the coarse aggregate in different sizes and blending training the coarse aggregate in different sizes and blending them in the right proportions. The different sizes shall be stocked in separate stockpiles. The grading of coarse and fine aggregate shall be checked as frequently as possible, as determined by Project Manager to ensure maintaining of grading in accordance with the samples used in preliminary mix designs. The material shall be stockpiles well in advance of use.

b. Cement

The cement shall be considered by weight, for design mix.

c. Water

Only such quantity of water shall be added to the cement and aggregates in the concrete mix as to ensure dense concrete, specified surface finish, satisfactory workability, consistent with the strength stipulated for each class of concrete. The

water added to the mix shall be such as not to cause segregation of materials or the collection of excessive free water on the surface of the concrete.

d. Definition of Water/Cement Ratio

The water cement (W/C) ratio is defined as the weight of water in the mix (including the surface moisture of the aggregates) divided by the weight of cement in the mix.

e. Water/Cement Ratio

The actual water cement ratio to be adopted shall be determined in each instance by Contractor and approved by the Project Manager.

f. Proportioning by Water/Cement Ratio

The W/C ratio specified for use by Project Manager shall be maintained. Contractor shall determine the water content of the aggregates as frequently as desired by the Project Manager as the work progresses and as specified in IS 2386 (Part III) and the amount of mixing water added at the mixer shall be adjusted as directed by the Project Manager so as to maintain the specified W/C ratio. To allow for the variation in their moisture content, suitable adjustments in the weights of aggregates shall also be made.

Batching and mixing of concrete

a. The proportions of the materials for the concrete mix as established by the preliminary test for mix design shall be followed for all the concrete in the works and shall not be changed except when specifically permitted by the Project Manager.

b. If approved by the Project Manager concrete may be produced by volume batching the ingredients except the cement. Fine and coarse aggregate shall be proportioned volumetrically by subsequent conversion of the weights of volumes knowing their bulk densities as stipulated in Para 9.2.2 or I.S. 456-2000. All concrete shall be mixed in mechanically operated batch mixers complying with I.S. 1791 of approved make with suitable provisions of correctly controlling water delivered to the drum. The quality of water actually entering the drum shall be checked with reading of gauge or valve setting before starting the job. The test shall be made while mixer is running. The volume of the mix material shall not exceed the manufacturer's rated mixer capacity. The batch shall be charged into the mixer so that some water will enter the drum in advance of cement and aggregates. All water shall be in the drum by the end of 15 seconds of the specified mixing time. Each batch shall be mixed until the concrete is uniform in colour for the minimum period of 2 minutes after all the materials and water is in the drum. The entire contents of the drum shall be adjusted in one operation before the raw materials for succeeding batches are fed into the drum. The entire contents of the drum shall be adjusted in one operation before the raw materials for succeeding batches are fed into the

drum. The weighing gauge of mix shall be periodically checked or as directed by the Project Manager. The contractor should carry our rectifications immediately if found necessary.

Mixer and the weight batcher shall be maintained in clean and serviceable condition. The accuracy of the weight batcher shall be periodically checked. Both mixer and the weight batcher shall be set up level on firm base and the hopper shall be loaded evenly. The needle shall be adjusted to zero when the hopper is empty. Fine and coarse aggregates shall be weighed separately.

Each time the work stops, the mixer shall be cleaned out and the next commencing he mixing, the first batch shall have 10% additional cement to allow for striking in the drum.

Batching Aggregate by Volume

a. Obtain approval before using this method.
b. Batch cement by weight and water by either weight or volume.
c. Measure aggregate in metal container whose depth is not less than their greater width and the size of which is such as to enable the whole to be easily checked.
d. Concrete shall be mixed in concrete mixers until a uniform distribution of the material, and a uniform colour and consistency is obtained.
e. Concrete mixing shall in no case be less than two minutes.
f. Each batch shall be so charged into the mixer that approximately 10% of the water enters the drum before the cement and aggregate. Water shall be added gradually while the drum is in motion, so that all the water is in the drum until the first quarter of the minimum time.
g. The amount of concrete mixed in drum shall not exceed the rated capacity of the mixer and the whole of the material shall be removed before a fresh batch enters the drum.
h. Do not modify the mixed concrete either by addition of water or cement or other means.

3.1.8.16 **Cleanliness**

a. Clean mixer and handling plant by washing with clean water at the end of the work and at intervals of 30 minutes during mixing.
b. If old concrete mix remains in the mixer drum, rotate the drum with clean aggregate and water before mixing the cement.

3.1.8.17 **Planning of Concrete**

a. Consultant shall be informed 24 hrs in advance before the pour of each concrete to allow for inspection of reinforcement, sizes and levels of the members to be concreted, concrete cover, cleanliness, filling of gaps and wide and supporting props.
b. Ensure that the spaces to revive concrete are clear free from debris and free from water.

c. Transportation: Use approved method to identify that the grade of concrete to be placed in proposed location.
d. Use suitable stools, walkways, barrow runs, for traffic over reinforcement or freshly placed concrete.
e. Clean the transportation equipment immediately after use or whenever cement and aggregate is used by using clean water.

Following issues are to be noted while planning of concrete pours:

- Slabs: to be cast in strips and not in alternate bays.
- Walls: to be cast in successive pours working away in both directions from the center with not shrinkage gaps except for final closure.
- Starters: shall be the same as for the main member and shall be vibrated / rammed into place and prepared as for other joints. Starters to be cast for walls monolithically with foundation. In case of columns, they can be cast after concreting of foundation / slab.

3.1.8.18 Ordinary Concrete

a. Ordinary cement concrete where specified shall be used
b. Proportions 1:3:6, 1:2:4, 1:1.5:3, etc., in the specification refers to the quantity of cement by volume, dry coarse sand by volume, quantity of coarse aggregate by volume.
c. Cement shall be weighed based on 1 cum. of cement weighs 1440 kgs or 1 full bag of cement 50 kgs corresponding to 35 lts. by volume.
d. Correction factors to be applied for bulking of sand when the sand is either wet or moist.
e. Water cement ratio used shall be just sufficient for the workability of concrete.
f. Minimum strength of concrete shall be obtained as below:

S No	Proportion of concrete	Preliminary tests	Work tests
1.	1:3:6	135 kg/sq.cm.	100 kg/sq.cm.
2.	1:2:4	200 kg/sq.cm.	150 kg/sq.cm.
3.	1:1.5:3	265 kg/sq.cm.	200 kg/sq.cm.

Comprehensive strength of concrete shall be obtained by testing 15 cm. cubes at 28 days curing.

g. Testing: 6 cubes shall be taken from any mix, 3 of them to be tested at 7 days, 3 at 28 days.
h. Strength of concrete at 7 days shall be 2/3rds of the strength of concrete at 28 days.
i. Strength of concrete at 28 days shall be as mentioned in table above and the criteria for accepting concrete is only the strength of concrete at 28 days.

3.1.8.19 Reinforced Cement Concrete

RCC comprises of formwork, reinforcement and concrete. Payment of Reinforced Cement Concrete shall be item wise as specified in the BoQ. Concrete shall be classified by its compressive strength at the 28th day. The concrete grade shall be as designated in Table 2 of IS: 456-2000.

Bill of Quantities shall specify various types of concrete aimed to be used in the Project. It shall be the Contractor's responsibility to carry out Design mixes and approval of the same from the Developers Representative well in advance of the actual pouring of concrete at the Site in the permanent works.

The basic aim of Mix Design shall be to find the most economic proportion of cement, aggregate and water which will give the desired target mean strength of concrete, workability and durability for specified grade of concrete. Also it is important that the Mix should be easily worked with the help of equipment available at the Site. The operations involved are measurement of materials, their mixing, placing, compacting, finishing required and curing. The design shall be carried out strictly to IS Specifications and IS Codes of Practice, namely IS: 456-2000 and S P –23-1982.

In order to ensure that not more than the specified proportion of test results are likely to fall below the characteristic strength, the concrete mix has to be designed for higher average compressive strength for a specified grade of concrete is defined a target mean strength.

3.1.8.20 **Design Mix and Trial Mixes**

Design Mix and weigh batching will be done as approved by the Project Manager. The Contractor shall submit to the Project Manager the tentative Mix Design it proposes to use at the site.

On receipt of the above, the Project Manager may immediately order to carry out work or site test before the final approval. This shall be done with the mixer, weigh batches, etc. and materials actually used in the Project.

This shall give the Contractor additional chance to check for itself actual workability and make sure that the mix proposed by it will be satisfactory with regards to slump, water-cement ratio and workability.

Test cubes shall be of size 150mm x 150mm x 150mm. These are to be legibly marked with location and date of concreting. Where concrete (in works) is to be vibrated or not vibrated, the cubes are to be casted as per IS Standards.

Where the concrete in the works is un-compacted, pour the concrete into the mould in three layers and compact each layer with a 16mm dia tamping rod.

Six (6) cubes shall be taken from each of the three batches to test the mix. Cube shall be cast, stored, cured, transported and tested as per IS:516-1959. The test may be carried out at the Site or at laboratory as approved by the Project Manager.

Trial mix

a. Within 7 days of signing the contract and before commencing work on site, prepare trial mixes for each type of concrete and submit 6 preliminary test cubes from each mix to the testing authority.
b. The testing authority shall test three test cubes at 7 days and three at 28 days for each type of mix where the difference between the higher and the lowest test results from any one trial mix at 7 days exceeds 15% of the average and any cube weaker than the minimum requirement, make a further trial mix, increasing the proportion of cement if necessary to obtain the required strength.
c. If any test results from any one-trail mix fail to exceed the minimum strength at 28 days:
    i. Remove from site materials from which the trial mix was prepared.
    ii. Provide new materials and prepare and test further trial mixes until specified requirements are achieved.

.

The Design Mix shall hold good so long as the materials continue to be of the same quality and from the same source. Minor adjustments are to be done daily based on the tests of materials used.

Compression strength on 150mm. Cubes

Grade of concrete at 28 days	**Preliminary test minimum kg/sq.cm**	**Work test minimum kg/sq.cm.**
(1)	(2)	(3)
M10	135	100
M15	200	150
M20	260	200
M25	320	250
M30	380	300
M35	440	350
M40	500	400

Control concrete shall be proportioned to obtain the required strength by conducting lab tests using the coarse aggregate, sand and cement based on the design mix.

Control concrete shall have suitable workability for proper consolidation.

At places having heavy reinforcement when compacting concrete is a problem, the control concrete shall be designed with special care to the required strength and workability at no extra cost.

Testing facilities to access the moisture content of aggregate at frequent intervals, testing of concrete cubes and testing of aggregate shall be done at the site by establishing testing laboratories.

Concrete shall be weighed batched. The dials of weigh-batching units shall be checked with standard weights periodically.

Under special circumstances the conversion of weights to volumes will be allowed by the Consultants / Project Manager.

The minimum cement content to be used for the job is as follows:

	43 GRADE	**53 GRADE**
M 15	280 Kg/cum	280 Kg/cum
M 20	318 Kg/cum	290 Kg/cum
M 25	350 Kg/cum	300 Kg/cum
M 30	388 Kg/cum	335 Kg/cum
M 35	423.5 Kg/cum	375 Kg/cum
M 40	459 Kg/cum	410 Kg/cum

Note: These are minimum quantity of cement to be used irrespective of the design mix.

Further the Contractor has to provide and maintain all the equipment and stock at the Site throughout to carry out the following tests in a small Site laboratory or get these tests done from approved laboratories without extra cost to the Contract.

- Grading of aggregate
- Silt content of sand
- Moisture content of aggregate
- Slump test of concrete mix
- Concrete cube test

The Contractor shall maintain full records for all above tests in a register. The format of the records shall be prepared in consultation with the Project Manager. It shall have full access to the Contractor's site laboratory. The Contractor shall include charges for these in its rates and no extra whatsoever shall be payable on this account of designing, testing, maintaining laboratory, etc.

3.1.8.21 **Temperature of Concrete**

The placing temperature of concrete shall not be more than 38 degrees Celsius. If it is more, the Project Manager may order addition of ice or chilled water to the concrete. Also the Contractor shall take following precautions:

- Mixer and Weigh Batcher shall be painted white color.
- Aggregate storing bin shall not be exposed to the sun.
- Water shall be sprinkled on aggregate well before concreting to keep the temperature low.

Similarly, during the cold weather, concreting shall not be done when the temperature falls below 4.5 Degrees Celsius. The concrete placed shall be

protected against by suitable covering. The concrete damaged by frost shall be removed and work redone with no extra cost.

3.1.8.22 **Shrinkage Cracks**

Concreting shall be avoided in very warm weather. Under such circumstances, the placed concrete shall be covered with damp hessian cloth within two hours of placing of concrete.

To achieve good result the concrete shall be immediately covered with a plastic sheet and not allowed to any direct wind contact to eliminate shrinkage cracks.

3.1.8.23 **Workmanship**

All works shall be true to level, plumb and square and all corners and edges in all cases shall be unbroken and neat.

Any work not to the satisfaction of the Project Manager or the Design Consultant will be rejected and the same should be rectified or removed and replaced with work of the required standard of workmanship at no extra cost.

3.1.8.24 **Transportation**

Concrete shall be transported with the help of pumps of sufficient capacity to achieve necessary heights wherever required from the mixer to the place of laying as rapidly as possible by methods which will prevent the segregation or loss of any of the ingredients and maintaining the required workability. The pumps can be either compressor type or boom type. All the pumping equipments have to be maintained and kept operational by the contractor.

3.1.8.25 **Placing of Concrete**

Placing of concrete shall be done using pumps only at all levels. The pumps shall be of sufficient capacity to achieve necessary heights wherever required.

The slump of concrete placed with the help of pumps shall not be more than 100mm unless otherwise instructed by the Project Manager. Concreting shall commence only after formwork is approved reinforcement is recorded and permission to proceed with concreting has been approved in writing from the Project Manager.

Formwork should be clean, free from dust, pieces of wood or any other foreign material. It should be treated by form releasing agent prior to the laying of reinforcement and concrete, based on sample approved by the Project Manager prior to start of construction at Site. Concrete shall be as gently deposited as is practically possible, in its final position to avoid rehandling and shall be so deposited that segregation of aggregates do not occur. In case of deep trenches and footings, it may be done with the help of chutes. Concrete from wheelbarrows shall not be dumped away from the face of concrete already been placed. It shall be dumped into the face of concrete already in place. Concrete

shall be laid during normal working hours. Concreting at night or on holidays shall be permitted only on the written approval of the Project Manager. No concreting shall be done within half an hour of the closing time of the day, unless permitted by the Project Manager.

For concreting of slabs and beams wooden plant or catwalks of chequered MS plates or bamboo mats or any other suitable materials supported directly on the centering by means of wooden blocks or lugs shall be provided to convey the concrete to the place of final deposition without disturbing the reinforcement in anyway. In no case labour or any other persons are allowed to walk over the reinforcement.

In case of columns and walls, it is desirable to place concrete without any construction joints. The progress of concreting in the vertical direction, shall be restricted to one meter per hour.

3.1.8.26 **Expansion Joint**

As indicated in drawing or as directed by the Structural Consultant / Project Manager.

3.1.8.27 **Curing**

Curing of concrete is most important. There shall be no compromise on this activity as it is for the Contractor to arrange for everything necessary to make sure that the concrete is cured to the complete satisfaction of the Project Manager. As said above after concrete has begun to harden, i.e. about 1 to 2 hours after laying. It shall be protected from quick drying with moist or damp hessian cloth or any other material approved by the Project Manager. After 24 hours of laying of concrete, the surface shall be cured by flooding with water or covering with moist hessian cloth for period of 7 days to keep it moist. For the next seven days surface shall be kept wet all the time by sprinkling water continuously.

In order to properly monitor the curing activity, the Contractor shall write legibly with paint, the date of casting the concrete of each member of the structure which shall remain clearly visible atleast till the completion of curing atleast.

3.1.8.28 **Finishing**

Concrete surface shall be finished keeping in mind the next operation to be carried out over the surface. For guidance the following points shall be noted:

- Roof shall be trowelled even and smooth with a wooden float, before the concrete begins to set.
- Surface that will receive plaster shall be roughened immediately.
- Surfaces that will be in contact with masonry shall be roughened immediately
- Surfaces that will receive floor finishes, tiling, etc. shall be roughened while it is still green.
- Every care shall be taken not to disturb the freshly laid concrete.
- For Ramps and Basements concrete shall be broom-finished.

On finishing standards and quality / workmanship, the decision of the Project Manager shall be final and binding on all parties.

3.1.8.29 **Inspection and Corrective Measures**

Immediately on removal of formwork, the RCC surface shall be examined by the Project Manager. Till such time, no remedial measures shall be carried out by the Contractor. All remedial actions including breaking, if any, shall be on the instructions of the Project Manager. In case of any violation of this rule, the concrete poured stands rejected. The decision of the Project Manager in this regard shall be final and binding to all parties.

Sagged, bulged, patched, honeycombed work to an extent detrimental to structural safety or architectural concept shall stand to be rejected and Contractor shall rectify by breaking or redoing, if required, as directed by the Project Manager/Structural Consultant and all expenses incurred due to this shall be to the Contractor's account.

Surface defects minor in nature may be accepted as a special case by the Project Manager/Structural Consultants whose decision in this matter is final and binding on the Contractor. Once accepted, the defects shall be rectified as follows and all expenses incurred due to the rectification process, shall be to the Contractor's account.

(a) Surface defects which require repair when forms are removed, usually consist of bulges due to the movement of forms, ridges at form joint, honey combed areas, damage, resulting from the stripping of forms and bolt holes, bulges and ridges are removed by careful chipping or tooling and the surface is then rubbed with a grinding stone. Honey combed and other defective areas must be clipped out, the edges being cut as straight as possible and perpendicularly to the surface, or preferably slightly undercut to provide a key at the edge of the patch.

(b) If permitted in writing by the Developer' Representative/ Structural Consultant, shallow patches are first to be treated with a coat of thin grout composed of one part of cement and one part of fine sand added with polymer modified cementitious material as per manufacturer's specification, and then filled with mortar (mixed with non-shrink additives) similar to that used in concrete. The mortar is placed in layers not more than 10 mm thick and each layer is given scratch finish to secure a bond with the succeeding layer. The laid layer is finished to match with the surrounding concrete by floating, rubbing or tooling on formed surfaces by pressing the form material against the patch while the mortar is still plastic.

(c) Or as an alternative to para (b) above, as directed by the Project Manager/Structural Consultant, the patch-work shall be treated with epoxy based proprietary items like non-shrinking grouts etc. available in the market. In such cases, the methodology as indicated by the manufacturer of the item

shall be followed. It permitted in writing by the Project Manager/Structural Consultant.

(d) Large and deep patches require filling up with concrete held in place with try forms. Such patches are reinforced and carefully drawled to the hardened concrete.

(e) Or as an alternative to para (d) above, epoxy based proprietary items like grouts as directed by the Project Manager / Structural Consultants, shall be used. The methodology as specified by the manufacturers of the proprietary item shall be strictly adhered to.

(f) Holes left by bolts are to be filled with non-shrink grouts, as specified and directed by the Project Manager/ Structural Consultants carefully packed in to places in small amounts. The mortar is mixed as dry as possible to allow enough water to go into it, so that it will be tightly compacted when forced into the place.

(g) Tiered holes extending right through the concrete may be filled with mortar or non-shrink grout, as the case may be, a pressure gun similar to the gun used for greasing motorcars.

(h) Normally, patches appear darker than the surrounding concrete when uniform surface colour is important, this defect shall be remedied by adding 10 to 20 percent of while portland cement to the patching mortar, the actual quantity being determined by trial.

(i) The same amount of care shall be taken to avoid the material in the patches as with the whole structure. Curing shall be started immediately after packing is done to prevent early drying. A membrane curing compound is these cases will be most convenient.

3.1.8.30 **Quantum of Cube Testing**

The minimum frequency of cube testing shall be as follows. Each set of sample shall consist of 6 cubes.

Concrete Quantity	**Number of Sample sets**
Up to 5 cum a day	1
5 cum to 15 cum a day	2
15 cum to 30 cum a day	3
30 cum to 50 cum a day	4
More than 50 cum per day	4 + one additional for each 50 cum or part thereof.

Three cubes shall be tested on the 7th day and three cubes on the 28th day.

3.1.8.31 **Acceptance of Work**

It shall be in accordance with in IS:456-2000, SP-23 and SP-24. The guidance brief is elaborated below. Part or element of work shall be deemed to be accepted, provided the results of the 28th day cube testing confirm to the criteria stated as under:

- The average of the three consecutive cubes strength shall not be less than specified strength.
- No individual cube strength shall be less than 90% of the specified strength.
- If the individual cube strength exhibit more than 133% of the specified strength such a cube shall be specified as freak and the criteria in above two points shall be applied to remaining two cubes and their acceptability determined.
- If cubes fail at 7 days, defective concrete can be dismantled, removed and replaced without awaiting 28 day test results.
- If the concrete tests fail to meet the acceptance strength required for respective grades of concrete, the Project Manager may take one of the following actions:
- Instruct Contractor to carry out such additional tests (e.g. Core tests, load tests, ultrasound, etc.) and/or remedial measures to ensure the soundness of the structure at the Contractor's expense
- The work will be rejected and any consequential action as needed shall be taken at the Contractor's expense, including cutting out and replacing a part or whole of work.

3.1.8.32 **Concreting under Special Conditions**

During hot or cold weather concreting should be done as per the procedure set out in IS:7861 Part I or IS:7861 Part II or as directed by the Project Manager.

Fixtures

Any fixture, steel angles, holdfasts etc shall be embedded according to the drawing or as instructed by the Project Manager.

3.1.8.33 **Ready Mix Concrete**

Reference - IS 4926-1976

3.1.8.34 **Terminology**

a) Ready Mixed Concrete - Concrete delivered at site or into the purchaser's vehicle in a plastic condition and requiring no further treatment before being placed in the position in which it is to set and harden. All provisions for good workmanship, quality control and treatment, as stated in previous clauses shall be applicable.
b) Agitation - The process of continuing the mixing of concrete at a reduced speed during transportation to prevent segregation.
c) Agitator - Truck mounted equipment designed to agitate concrete during transportation to the site of delivery.

d) Truck mixer - A mixer generally mounted on a self-propelled chassis capable of mixing the ingredients of concrete and of agitating the mixed concrete during transportation.

3.1.8.35 **Types**

Concrete-mix - Concrete shall be produced by completely mixing cement, aggregates, admixtures, if any and water at a stationary central mixing plant and delivered in containers fitted with agitating devices.

3.1.8.36 **Materials**

Cement - The cement used shall be ordinary Portland cement or low heat Portland cement conforming to IS-269-1976* or Portland slag cement conforming to IS 455-1976+ or Portland-pozzolana cement conforming to IS: 1489-1976+ or rapid hardening Portland cement conforming to IS 8041E-1976## as may be specified by consultant at the time of placing the order. If the type is not specified ordinary Portland cement shall be used.

Fly ash when used for partial replacement of cement, shall conform to the requirements of IS: 3812 (part I)-1966.

Water used for concrete shall conform to the requirement of IS: 456-1964.

Admixtures shall only be used when so agreed to between the purchases and the manufacturer. The admixtures shall conform to the requirements of IS 456-1964 and their nature, quantities and methods of use shall also be specified. Fly ash when used as an admixture for concrete shall conform to IS: 3812 (Part II)-1966.

Measurement and Storage of Materials - Measurement and storage of materials shall be done in accordance with the requirements of IS: 456-2000.

3.1.8.37 Basis of Supply

The ready mixed concrete shall be manufactured and supplied on the following basis.

a) Specified strength based on 28-day compressive strength of 15-cm cubes tested in accordance with IS: 456-1964.

When the concrete is manufactured and supplied on the basis of specified strength, the responsibility for the design of mix shall be that of the manufacturer.

3.1.8.38 **General Requirement**

In addition to the requirements specified in this standard and subject to such modifications as may be agreed to between the purchaser and the manufacturer at the time of placing order, the ready-mixed concrete shall generally comply with the requirements of IS: 456-2000.

The minimum quantity of cement and the details regarding proportioning and works control shall be as per Clause 3 / 2.2.7.1.

When a truck mixer or agitator is used for mixing a transportation of concrete, no water from the truck-water system or from elsewhere shall be added after the initial introduction of the mixing water for the batch, except when on arrival at the site of the work, the slump of the concrete is less than that specified; such additional water to bring the slump within required limits shall be injected into the mixer under such pressure and direction of floor that the requirements for uniformity specified in Appendix A are met.

Unless otherwise agreed to between the purchaser and the supplier, when a truck mixer of agitator is used for transporting concrete, the concrete shall be delivered to the site of the work and discharge shall be complete within 1.5 hours (when the prevailing atmospheric temperature is above 20°C) and within 2 hours (when the prevailing atmospheric temperature is at or below 20°C) of adding the mixing water to the dry mix of cement and aggregate or of adding the cement to the aggregate, whichever is earlier.
Temperature - The temperature of the concrete at the place and time of delivery shall be not less than 5°C. Unless otherwise required by the purchaser, no concrete shall be delivered, when the site temperature is less than 2.5°C and the thermometer reading is falling.

The temperature of the concrete shall not exceed 5^0C above the prevailing shade temperature, when the shade temperature is over 20^0C. The temperature of concrete mass on delivery shall not exceed 40^0C.
Sampling and testing: Adequate facilities shall be provided by the manufacturer for the purchaser to inspect the materials used, the process of manufacture and the methods of delivery of concrete. He shall also provide adequate facilities for the purchaser to take samples of the materials used.

Sampling and testing - Unless otherwise agreed to between the purchaser and the supplier, the sampling and testing of concrete shall be done in accordance with relevant requirements of IS: 456-1964, IS: 1199-1959and IS: 516-1959.

Consistency or workability - The tests for consistency or workability shall be carried out in accordance with requirements of IS: 1199-1959 or by such other method as may be agreed to between the purchaser and the manufacturer.

Strength Test - The compressive strength and flexural strength tests shall be carried our in accordance wit the requirements of IS: 516-1959 and the acceptance criteria for concrete whether supplied on the basis of specified strength or on the basis of mix proportion, shall conform to the requirements of Table 5 and other related requirements of IS: 456-1964.

Cost of Testing - Unless otherwise agreed to between the purchaser and the manufacturer, the cost of the tests carried our in accordance with the requirements of this specification shall be borne as follows:

a) By the manufacturer if the results show that the concrete does not comply with the requirements of this standard.
b) By the purchaser if the results show that the concrete complies with the requirements of this standard.

Manufacturer's Records and Certificates - The manufacturer shall keep batch records of the quantities by mass of all the solid materials, of the total amount of water used in mixing and of the results of all tests. If required by the purchaser, the manufacturer shall furnish certificates, at agreed intervals, giving this information.

The concrete quality shall meet all requirements and Specifications of concrete as stated hereof. Contractor shall be allowed to use own Batching Plant or procure concrete, but Quality Tests will be the responsibility of the Contractor and off-site Batching Plants shall be open for inspection to the Project Manager throughout the Project.

3.1.8.39 **Admixtures**

General

Admixtures may be used in concrete only with the approval of Consultant / Project Manager based upon evidence that, with the passage of time, neither the compressive strength not its durability get reduced. Calcium chloride shall not be used for accelerating set of the cement for any concrete containing reinforcement, or embodied steel parts. When calcium chloride is permitted to be used, such as in mass concrete works, it shall be dissolved in water and added to percent of the weight of the cement in each batch of concrete. When admixtures are used, the designed concrete mix shall be corrected accordingly. Admixture shall be used as per manufacturer's instructions and in the manner and with the control specified by Consultant / Project Manager.

3.1.8.40 **Air Entraining Agent**

Where specified and approved by Consultant / Project Manager, neutralized vinsol resin or any other approved air entering agent may be used to produce the specified amount of air in the concrete mix and these agents shall conform to the requirements of ASTM Standard 6 - 260, Air Entering admixtures for concrete. The recommended total air content of the concrete is 4% plus or minus 1%. The method of measuring air content shall be as per IS 1199.

3.1.8.41 **Retarding Admixtures**

Where specified and approved by Consultants / Project Manager retarding agents shall be added to the concrete mix in quantities specified by Consultants / Project Manager.

3.1.8.42 **Water Reducing Admixtures**

Where specified and approved by Consultants / Project Manager water reducing lignosulfonate mixture shall be added in quantities specified. The admixtures shall be added in the form of a solution.

3.1.8.43 **Water Proofing Agent**

Where specified and approved by Consultants / Project Manager, chloride and sulphide free waterproofing agent shall be added in quantities specified.

3.1.8.44 **Other Admixtures**

a. The Consultants / Project Manager may at his discretion instruct the contractor to use any other admixtures in the concrete.
b. If the Contractor so wishes to use admixtures, then the following should be adhered to (subject or Project Manager's approval).
c. No reduction will be allowed to target mean strength when compared to admixture free concrete of the same class.
d. Dosage of admixture shall be strictly in accordance with the manufacturers instruction.
e. The following information about the admixture shall be submitted to the Consultants / Project Manager for record and approval.

   - Long and short term effects of the admixture in the concrete.
   - Effect of admixture of concrete permeability.
   - Effects of over and under dosage.
   - Shortage life and special storage requirements.

f. The Contractor when requested shall provide the services of a full time field technician of the admixture manufacturer to advise the proper addition of the admixture to the concrete or adjustment of concrete mix proportions to meet changing conditions.
g. The Contractor shall furnish a statement of responsibility from the admixture manufacturer for their products.
h. If the use of admixture is approved by the Consultants / Project Manager, it shall be constructed as a constructing part of the concrete without any extra payment

Annexure 1
Course Aggregate Grading
IS : 383 Table 2

IS Sieve Sizes	Percentage passing for single size Aggregate						Percentage passing for Graded Aggregate Nominal Size			
	63mm	40mm	20mm	16mm	12.5mm	10mm	40mm	20mm	16mm	12.5mm
80mm	100	-	-	-	-	-	-	-	-	-
63mm	85 to 100	100	-	-	-	-	100	-	-	-
40mm	0 to 30	85 to 100	100	-	-	-	-	-	-	-
20mm	0 to 5	0 to 20	85 to 100	100	-	-	95 to 100	100	-	-
16mm	-	-	-	85 to 100	100	-	30 to 70	95 to 100	100	100
12.5mm	-	-	-	-	85 to 100	100	-	-	90 to 100	-
10mm	0 to 5	0 to 25	0 to 20	0 to 30	0 to 45	85 to 100	-	-	-	100
4.75mm	-	-	0 to 5	0 to 5	0 to 10	0 to 20	10 to 35	25 to 55	30 to 70	40 to 85
2.36mm	-	-	-	-	-	0 to 5	0 to 5	0 to 10	0 to 10	0 to 10

Annexure 2
Grading of Fine Aggregates
IS : 383 Table 4

IS Sieve Designated	Grading Zone I	Grading Zone II	Grading Zone III	Grading Zone IV
10mm	100	100	100	100
4.75mm	90 to 100	90 to 100	90 to 100	95 to 100
2.36mm	60 to 95	75 to 100	85 to 100	95 to 100
11.18mm	30 to 70	55 to 90	75 to 100	90 to 100
600 microns	15 to 34	35 to 59	60 to 79	80 to 100
300 microns	5 to 20	8 to 30	12 to 40	15 to 50
150 microns	0 to 10	0 to 10	0 to 10	0 to 15

3.1.9 Reinforcement

3.1.9.1 **Related Works**

A. Concrete Formwork
B. Cast in-situ Concrete

3.1.9.2 **Applicable Standards**

IS - 432	Specification for Mild steel and medium tensile bars and hard drawn steel wire.
IS - 1139	Specification for hot rolled mild steel, medium tensile steel and high yield strength steel deformed bars for concrete reinforcement.
IS – 1566	Specification for plain hard drawn steel wire fabric for concrete reinforcement
IS - 1785	Specification for plain hard drawn steel wire for prestressed concrete.
IS - 1786	Specification for cold twisted steel high strength deformed bars for concrete reinforcement.
IS - 2080	Specification for high tensile steel bars used in prestressed concrete
IS - 2751	Code of practice for welding of mild steel structures are folded plates
IS - 2502	Code of practice for bending and fixing of bars for concrete reinforcement

3.1.9.3 **Steel Grades**

Reinforcements for concrete may be from any of the “grades” of steel indicated below, conforming to the relevant Indian Standards and their latest amendments mentioned against each:

Grade	Description	Conforming to
Fe 250	Mild Steel	IS 432 (Part I)
Fe 490	Hard drawn steel wire	IS 432 (Part II)
Fe 415	High strength deformed/ ribbed steel	IS 1786
Fe 500	High strength deformed / ribbed steel	IS 1786
Fe 550	High strength deformed / ribbed steel	IS 1786

Reinforcing steel may be any of the following types:

Type I	Plain round bars (PR)
Type II	Welded wire Fabrics (WWF)
Type III	Cold Twisted Deformed Bars / Corrosion resistant bars. (CTD-CR)

Type IV Thermo-Mechanically Treated Ribbed bars (TMT)
Type V Thermo-Mechanically Treated Ribbed Corrosion Resistant bars (Copper) Bearing (TMT-CR)

3.1.9.4 **BIS Certification**

Material received at the Site shall have BIS Certification mark. Such bundle or coil containing the bars shall be suitably marked with BIS Certification mark. Bars shall also be marked to identify categories. This shall be done as per IS: 1387.

In case bars are without BIS Certification mark, the manufacturer shall give a certificate stating the process of manufacture, chemical composition and mechanical properties. Each certificate shall indicate the number or identification mark of the cart to which it applies, corresponding to the number or identification mark to be found on the material.

All reinforcements shall be free from loose mill scale, excessive rust, loose rust, pitting, oil, grease, paint, mud or any other foreign deleterious material present on the surface. Cleaning should be done to the satisfaction of the Project Manager.

Each batch of steel brought to the Site shall be tested prior to use. Cost of all tests shall be borne by the Contractor.

Material acceptable as per IS Specifications will be allowed into the Project. All rejected material shall be removed from the Site by the Contractor within 30 days of its rejection. If the same is not done, the Project Manager can get work done by third party at the contractor's risk and cost shall impose a penalty of Rs 500 (Rupees Five Hundred only) per metric ton per day. This will be without any appeal and shall not be subjected to arbitration.

3.1.9.5 **Storage**

Reinforcement bars received at the Site shall be stored on hard, concreted platform and clear of the ground to a minimum of 300 mm with the use of timber sleepers or any other means. Reinforcements shall be kept covered by tarpaulins or plastic to avoid excessive corrosion or any other contamination. It is advised to follow storage methods as described in IS: 4082. **The Contractor shall comply with the instruction of the Project Manager on method of stacking of steel**.

Reinforcement steel shall be stored in such a manner as to avoid distortion and to prevent deterioration and corrosion. Prior to assembly of reinforcement on no account any oily substance shall be used for removing the rust.

3.1.9.6 **Quality Assurance**

a. Supervisory staff shall have qualification and experience in the above field.
b. Welders qualified and having approved certificates for welding shall be employed.

3.1.9.7 **Handling**

a. Bend test requirements shall conform to the following and shall be based on 1800 bends of full size bars around pins.

Bar diameter (mm)	**Pin diameter for test bend**
10, 12,16	3.5 x bar dia
20, 22, 25	5.0 x bar dia
28, 30, 32	7.0 x bar dia

b. Spacers shall be of any of the following:
   i. Wire
   ii. Precast concrete
   iii. Moulded plastic

   Spacer material shall be of durable quality and shall not lead to corrosion of reinforcement or spilling of concrete.

   Precast concrete spacers shall be of the same mix as that of surrounding concrete.

c. Tying wire shall be of 18 G black annealed mild steel wire or other approved type double fold to tie the reinforcements.

d. Cover blocks shall be non-corrosive material such as plastic, but not wooden or broken bricks or stone. Specially made concrete blocks shall be used. Such cover blocks shall be cast from concrete and not from cement mortar; strength of these blocks shall be equal to the concrete in use.

e. Tying wire shall be of 18G black annealed mild steel wire or other approved type double fold to tie the reinforcements. It shall be face from rust, oil, paint, grease, loose mill seales or any other deleterious material undesirable for concrete or reinforcement or which may prevent adhesion of concrete to reinforcement.

3.1.9.8 **Unit Weights:**

Unit weights payable per meter shall be as follows:

6 mm ∅	0.22 kg/ rm
8 mm ∅	0.39 kg/ rm
10 mm ∅	0.62 kg/ rm
12 mm ∅	0.89 kg/ rm
14 mm ∅	1.21 kg/ rm
16 mm ∅	1.58 kg/ rm
18 mm ∅	2.00 kg/ rm
20 mm ∅	2.47 kg/ rm
22 mm ∅	2.98 kg/ rm
25 mm ∅	3.85 kg/ rm
28 mm ∅	4.83 kg/ rm
32 mm ∅	6.31 kg/ rm
36 mm ∅	7.99 kg/ rm
40 mm ∅	9.86 kg/ rm

3.1.9.9 **Execution**

Cutting and Bending

a. Flame cut and hot bending is absolutely forbidden.
b. Cut and bend reinforcement to approved shop drawings and details shall be used.
c. Bars to be cold-bend, either mechanically or by hand, but to correct radius using proper tools, machine and platform and confirming to IS 2502-1963.
d. Do not rebend without approval. In case of re bending, care shall be taken that the rating of bend is not less than 4 x bar dia at construction joints for plain steel bars and 6 x bar dia for high strength bars.
e. Reinforcement projecting from concrete shall not be bent without approval.
   Bar bending schedule to be submitted for approval of the Structural Consultant to the Project Manager prior to commencement of any cutting, bending and binding of steel at site.
f. Cracked end of bars shall not be used on this Project.
g. Bars should be inspected for visible defects such as cracks, brittleness, excessive rust, loose mills scale, etc.

Welding

a. Do not weld reinforcement unless authorized by the Consultants / Project Manager and recommended by the manufacturers.
b. Site welding shall be done with suitable safeguards and techniques.
c. Welding, if approved, may be used for:
   i. Lapping reinforcement in position

ii. Fixing reinforcement to other steel members.

d. The length of run deposited in a single pass shall not exceed 5 x bar diameters. If a longer welded length is required divide into sections with the space between runs not less than 5 x bar diameters.

e. Welded joints:
   i. Shall not be made at bends in reinforcement.
   ii. Stagger joints in parallel bars of principal reinforcement unless otherwise approved.
   iii. The distance between staggered joints shall not be less than the end anchorage length joints.

Mechanical Splicing

a. To comply with ISI 456-2000. ACI 318-1983 and ACI 439-3R-83
b. Use as indicated in structural drawings.
c. Consultant has to approve mechanical splices before using it at site.

Inspection

a. Ensure that the reinforcement placing is checked by Project Manager.
b. Ensure that the Formwork to receive the reinforcement is clean and free from debris.
c. Cracked end of bars to be cut out.

Anchoring

Anchoring of bars and stirrups shall be provided exactly as detailed in the structural drawings or as directed by Project Manager/ Structural Consultant. In case of reinforcement steel in tension, deformed bars may be used without end anchorage provided the development length requirement is satisfied. Hocks shall normally be provided for plain bars in tension. Development length of the bars shall be determined as per relevant clauses of IS: 456 - 2000.

The anchorage length of straight bar in compression shall be equal to the Development length of the bars in compression as specified in relevant clause of IS: 456 - 2000.

Lapping of Bars

Laps shall be strictly as per the structural drawing or as directed by the Project Manager/Structural Consultant. For general guidance the following principles shall be followed as given in IS: 456 - 2000

- As far as possible bars of the maximum length available shall be used.

- Laps shown on drawings or otherwise specified by the Structural Consultant will be based on the Contractor using bars of maximum length.
- In case Contractor wishes to use bars of shorter length, laps shall be provided at the Contractor's expense in the manner and the locations approved by the Structural Consultant.
- Splices shall be provided as far as possible away from the sections of maximum stress and be staggered.
- Not more than half of the bars shall be spliced at a section
- If more than half of the bars shall be spliced at a section, special case shall be ensured such as increasing length of lap or closer spacing of stirrups around the length of splice.
- Lap splice shall not be used for bars having diameter larger than 36 mm. For larger diameters bars it may be welded. Lap length including anchorage value of hooks in flexural tension shall be L_a (as defined in Article 25.2.1 of IS: 456-2000) or 30 times the diameter of the bar whichever is greater and for direct tension $2L_a$ or 30 times the diameter of the bar whichever is greater. The straight length of lap shall not be greater than 15D or 20 cm, whereas D is the diameter of the bar.
- Lap length in compression shall be equal to the development length in compression calculated as described in relevant clause of IS: 456-2000 or as specified in the structural drawing but not less than 24 times the diameter of the bar.
- Overlapping bars shall not touch each other and these shall be kept apart with concrete between them by 25mm or 1.25 times the maximum size of the coarse aggregate, whichever is greater.
- When above is not possible, the overlapping bars shall be bound together at intervals not exceeding twice the diameter of such bars with two strands of annealed binding wise of 0.90mm to 1.6mm diameter twisted together tightly.
- As and when necessary welded laps shall be proved as specified by the Structural Consultant.

Securing Reinforcement

a. Adequately secure with tying wire or approved steel clips.
b. Bend the tying wires well back clear of forms.

3.1.9.10 Concrete Cover

a. Shall be in accordance with ISI: 456-2000 and as per the instructions in structural drawings.

   i. Footings, retaining walls and Similar members in contact

	with earth but not cast against earth	- 50 mm
ii.	Slabs	- 20 mm
iii.	Walls, ribs	- 20 mm
iv.	Beams:	
	For main bars	- Min.25 mm or dia. of the bar
	For stirrups	- 15 mm
v.	Columns	- 40 mm
	Columns less than 20 cms	- 25 mm
vi.	Water tanks:	
	In contact with water	- 40 mm
	In contact with air	- 20 mm
vii	Walls in contact with water / Earth	- 40mm

3.1.9.11 Spacers Chairs and Other Supports

a. Provide necessary supports to maintain reinforcement in its correct position.
b. Provide spacer bars of same diameter as longitudinal bars but not less than 25mm diameter between two layers at 1.5 mm centers except where bundled bars are detailed.

3.1.9.12 **Precautionary Measures**

a. Do not insert bars into placed concrete.
b. Do not damage forms and form linings, if any when fixing reinforcement.

3.1.9.13 **Adjustment and Cleaning**

a. Check reinforcement prior to and during placing concrete with particular attention to the top reinforcement in Cantilever sections.
b. Ensure that reinforcement is clean and free from corrosive pitting, loose rust, loose mill scale, oil and other substances, which may adversely affect reinforcement concrete or the bond between the two.
c. Protect the projecting reinforcement from weather where the rust staining of exposed concrete surfaces may occur.

3.1.10 Formwork

3.1.10.1 **Related Work**

- Concrete
- Reinforcement

3.1.10.2 **Applicable Standards**

IS - 303	Specification for Plywood for general purposes
IS - 4990	Specification for plywood for concrete shuttering work
IS - 1629	Rules for grading of cut size of timber
IS – 2750	Specification for steel scaffoldings.
IS - 4014	Code of practice for steel tubular, scaffolding

3.1.10.3 **Section Includes**

Design, Fabrication, erection and striking of formwork for in - situ concrete

3.1.10.4 **Quality Assurance**

Design and construction shall be executed and supervised by fully qualified personnel.

In accordance with quality assurance programme, the contractor shall provide the Consultants / Project Manager with information demonstrating that a system will be used to ensure that the work carried out under this section (including that done by sub-contractors) will comply with the requirements of the specifications.

3.1.10.5 **Design Criteria**

Formwork system shall be executed and designed by a specialist qualified to the shapes, lines, forms and dimensions shown on drawings. The Contractor shall submit to the Project Manager a method statement backed by design calculations. Required drawings and sketches shall be enclosed along with the statement for the proposed area to be taken up for working at a time. The number of repetitions expected, type of material used, etc shall be detailed therein.

Formwork shall start only after written approval from the Project Manager & Structural Consultant has been received. Approval of the proposal in submitted form a acceptance of modification does not relieve the Contractor of its obligation to achieve its required line finish within accepted tolerance limits in terms of quality of works completed and safety. Neither it will dimish the Contractor’s responsibility for the satisfactory performance of formwork.

Basic points to be understood in designing of formwork is stated below:

a) Erected Form work shall be watertight, shall conform to shape, lines, dimensions, verticality, rigid during placing, vibrating and configuring the concrete
b) Formwork system shall be of steel or timber or 12mm thick water resistant Ply board, and shall be continuous, straight and without any warping.
c) Design of formwork shall take into account:
   - Height of pour
   - Thickness of member
   - Rate of pour
   - Concrete slump
   - Texture of finish
   - Placing temperature
   - Concrete density
   - Construction joints
   - Wind load
   - Method of Discharge
d) Form work design shall have
   - Dimensional tolerance
   - De mountable without shock, disturbance or damage to concrete
e) All construction joints in beams and slabs shall be provided as shown in drawings.
f) Ties shall be provided where required
g) Cambers shall be provided where shown.
h) Props / supports of extra ceiling height shall be specially designed.

3.1.10.6 **Form Work Material**

Construction formwork with smooth faced plywood, steel or timber to produce smooth straight level and sharp profiles shall be used for the works. Panels to be in largest practicable sizes to reduce the number of joints.

a) Form material shall have strength adequate to withstand pressure of newly placed concrete without excessive and adjustable bow or deflection.
b) Factory fabricated, adjustable length removable or snap of metal form ties, design to prevent from deflection and to prevent spilling concrete surfaces on removal.
c) Ties shall be such that
   - A portion remaining within the concrete shall be at least 38mm from the outer concrete surface.
   - That will not leave a hole larger than 25mm dia meter on the concrete surface.

d) Form coating compound that will not bond with, stain, not adversely effect concrete for required bond or adhesion not hamper the wetting of surface to be covered with water or curing compound.

All propping and centering shall be of adjustable steel supports (built-up sections of rolled steel) and tubular props to full height without joints, and with sufficient bracing to take into account the construction loads, namely full load of concrete with any live load and impact load likely to occur during concreting.

Steel shuttering used for concreting shall be sufficiently stiffened. The steel shuttering shall also be properly repaired before sue and properly cleaned to avoid stains and defects in concreting.

3.1.10.7 **Workmanship**

Formwork shall be classified based on the ultimate finishes required of the concrete surface as:

- Textured or decorative finish
- Fair-faced finish
- Rough finish

The Contractor shall account for all material and labour to achieve the above finishes to the satisfaction of the Project Manager in his quoted price.

Guidelines for Good Workmanship

Following are a few points as guidelines for good workmanship in formwork and shall be accounted for in his quoted price.

- Erection of formwork may be from pre-moulded, pre-fabricated, pre-assembled plates or form reasonable enough to transport and erect at site to correct lines and levels as set at site.
- Supports shall be firm and maintained in position by nails, cross bracing, tie-rods, locking bolts, nuts, etc. It shall be rigid and stiff so as to retain its shape during and after concreting.
- Joints shall be water-tight and no cement slurry shall be allowed to get through
- Pre-fabricated or site forms shall be assembled so as to deshutter without any jerk to the green concrete. For this double wedges shall be used. The wedges shall be nailed. The heads left with, allowing easy removal while deshuttering.
- Pre-fabricated or site formwork shall be sufficient thickness with supporting spans in both directions. These shall be standardised in size for easy replacement and universal use at site

- Props shall be of steel only. Its spacing shall be as per design. It shall be vertical and plumbed. Base shall be of proper steel plate or timber plank for equal distribution of load
- In case of multi-storied buildings, any upper floor shall be suitably supported on at least one floor below the same, or as approved by the Project Manager.
- Props shall be adequately cross-braced horizontally
- At the design and erection stage following additional points shall be considered and be incorporated into the setting
- Opening of cleaning prior to the start of concreting
- Pouring points shall avoid high drops and provide easy access to vibrating needles
- Surfaces shall be treated with suitable releasing oil or emulsion prior to the reinforcement laying. Such releasing oil shall be got approved from the Project Manager.
- Ensure that forms and adjacent surfaces are thoroughly cleaned to receive concrete and debris.
- Locate construction joints in a manner so as not to impair strength and appearance of structure.
- **Without absolving the details on the above, the Contractor shall comply with instruction of the Project Manager regarding formwork designing, erection, execution, rotation, maintenance and reuse.**

Following points shall be observed very carefully:

- Joints of formwork shall be watertight. It is easy to check from the bottom and make sure no light is visible
- Props shall be on solid base, plumbed, in straight line, braced horizontally and cross
- Tie-bars, bracing and spacers in beams, walls and columns shall be at correct place/location and fully tight
- Wedges shall be fully secured and nailed with heads left out for easy removal
- All saw dust, dirt, shavings and any other unwanted material shall be cleaned and hosed out
- Provision shall be made for watching formwork while concreting and any other platform needed for movement of workers without any disturbance to the reinforcement
- Provision is made for traffic on formwork : not to bear directly on reinforcing steel.
- Number of reuses shall be decided by the Project Manager on examining the condition of formwork after each use. If during concreting any weakness develops or formwork shows any distress, the work shall be stopped and remedial action taken.

3.1.10.8 **Finishing Formed Surfaces**

The Contractor shall:

- Repair and patch defective areas with fins and other projections completely removed or smoothed.
- To smooth concrete where fins and other projections have formed moisten concrete surface within a day after forms have been removed and rub with carborundum brick until surface is a uniform colour and texture within the projection limits.
- Not apply cement ground other than that produced by the rubbing process.
- Remove and replace concrete having defective surfaces if defects cannot be repaired to the satisfaction of the superintendent.

Surface defects shall include colour and texture irregularities, cracks, spills, air bubbles, honeycombs, rock pockets, fins and other projection on the surface, stain and form tie holes.

The contractor shall:

- Undercut voids larger than 25mm diameter and fill with fresh concrete after thoroughly wetting concrete surfaces.
- Fill small holes and irregularities using 2:1 (Portland cement to fine sand by volume) grout mixed with approved bonding admixture according to manufacturer's specification.
- Blend standard Portland cement with white Portland cement if necessary so that final colour of dry grout will match adjacent surfaces.
- After applying grout to repair area, wipe with Hessian cloth to match adjacent texture and within the specified surface tolerances.
- Keep concrete patch damp with fog *spray for at least 36 hours.

3.1.10.9 **Tolerances**

Tolerance is a specified permissible variation from lines, grades or dimensions given in drawings. No tolerances are specified for horizontal or vertical encroachments beyond the legal boundaries. Unless otherwise specified, tolerances given in the following sections shall be permitted.

3.1.10.10 **Removal of Formwork:**

Formwork shall not be struck until the concrete has reached a strength at least twice the stress to which the concrete may be subjected at the time of removal of formwork.

- Formwork shall be removed carefully without jarring the concrete and curing of the concrete shall commence immediately. Sudden shocks /

vibrations during removal of wedges shall be avoided. Where finished edges have re-entrant angles, remove formwork as early as possible to avoid shrinkage cracks.

- Concrete surfaces to be exposed shall where required by the Project Manager, be rubbed with carborandum stone to give a smooth and even finish.
- Where concrete requires plastering or other finish later, the concrete surface shall be hacked as directed.
- No extra charge will be allowed to the Contractor for such work.

3.1.10.11 **Minimum time Requirements**

For other cements the stripping time shall be suitably modified in consultation with the Project Manager.

For precast moulds the stripping time shall be 24 hours.

Striking time shall be as follows:

	Type of Formwork	**Minimum period before striking (excluding the day of casting)**
i.	Walls, columns	12 hrs
ii.	Vertical faces	12 hrs
iii	Removal of formwork with props fully left under spanning over 6m	7 days
iv	Between ribs not more than 1 to 2 m	7 days
v.	Ribs, joists, beams, soffits	
	- Up 3m clear span - Beams	7 days
	- Between 3m to 6m - Beams	14 days
	- Above 6m clear span beams	21 days
vi.	One way floor slabs - up to 3m	7 days
vii.	One way floor slabs - between 3m to 6m	10 days
viii	One way floor slabs - over 6m	14 days
ix	Beams and Girder Sides	12 days
x.	Removal of props below slabs spanning over 6m	21 days

Striking of Formwork within the time limits listed above is subject to successful crushing of tubes compressive strength results. However re-shuttering and re-propping can be done if the required strength is attained as per the instructions of Structural Consultant / Project Manager.

3.1.10.12 **Cleaning and Oiling of Forms**

The contactor shall ensure that the surface of the forms that will touch the concrete shall be free from encrustations of mortar, grout, or other foreign

material. Temporary openings shall be left at the bottom of formwork to enable sawdust, shavings, wire off-cuts and other foreign material to be removed from the interior of the forms before the concrete is placed. Compressed air shall be used to clean the complete formwork and remove all traces of duct and debris before pouring concrete the temporary holes shall then be closed.

The surface of the forms to be in contact with the concrete shall be coated with a reliable coating that will effectively prevent the adherence of concrete and will not stain the concrete surfaces. After each use, the surfaces of forms which have been in contact with concrete shall be cleaned of mortar and any other material sticking to them, then well wetted and treated with form oil approved by the Project Manager.

The Contractor shall provide commercial form release agent that will not bond with, stain or adversely affect concrete surfaces and will not impair subsequent treatment of concrete surfaces.

3.1.10.13 **Openings / Inserts**

Contractor shall provide all required openings, pockets, inserts as detailed in drawings. The Contractor shall provide required material and labour for fixing and supporting during concreting. In its quoted price, it is imperative to consider that all openings and pockets shall be deshuttered with care and all corners of openings shall be preserved, ie shall be in correct line and level. After concreting the openings shall be secured against any accident by proper covering and guard rail, warning notice, lighting, etc for which no extra cost is payable to the Contractor.

3.1.11 Dry Lean Cement Concrete Sub-Base

3.1.11.1 Scope

The work shall consist of construction of dry lean concrete sub-base for cement concrete pavement in accordance with the requirements of these Specifications and in conformity with the lines, grades and cross- sections shown on the drawings or as directed by the Engineer. The work shall include furnishing of all plant and equipment, materials and labour and performing all operations, in connection with the work, as approved by the Engineer.

The design parameters of Dry Lean Concrete (DLC) sub-base, viz., width, thickness, grade of concrete, details of joints, if any, etc. shall be as stipulated in the Contractdrawings.

3.1.11.2 **Materials**

Source of Materials: The Contractor shall indicate to the Engineer the source of all materials with relevant test data to be used in the dry lean

concrete work sufficiently in advance and the approval of the Engineer for the same shall be obtained at least 45 days before the scheduled commencement of the work in trail length. If the Contractor later proposes to obtain the materials from a different source, he shall notify the Engineer for his approval at least 45 days before such materials are to be used.The surface to receive flooring shall be clean, free from dirt and free from foreign material.

Cement: Any of the following types of cement may be used with prior approval of the Engineer:

S.No.	Type	Conformingto
i)	OrdinaryPortlandCement	IS:8112IS:
ii)	OrdinaryPortlandCement53Grade	12269

Note:

1) Mix design will be done as per IRC: SP: 49. The OPC content shall not be less than 400 kg/cu.m in case of blending at site. The curing period may be suitably enhanced (by atleast about 2 days).

If the sub-grade is found to consist of soluble sulphates in a concentration more than 0.5 percent, cement used shall be sulphate resistant and shall conform to IS: 6909.

Cement to be used may preferably be obtained in bulk form. It shall be stored in accordance with stipulations contained in Clause 1014 and shall be subjected to acceptance test prior to its immediate use.

Aggregates

Aggregates for lean concrete shall be natural material complying with IS: 383. The aggregates shall not be alkali reactive. The limits of deleterious materials shall not exceed the requirements set out in IS: 383. In case the Engineer considers that the aggregates are not free from dirt, the same may be washed and drained for at least 72 hours before batching, or as directed by the Engineer.

Coarse aggregates: Coarse aggregates shall consist of clean, hard, strong, dense, non-porous and durable pieces of crushed stone or crushed gravel and shall be devoid of pieces of disintegrated stone, soft, flaky, elongated, very angular or splintery pieces. The crushed gravel/aggregate shall have atleast one fracture faces. The maximum size of the coarse aggregate shall be 31.5 mm. The coarse aggregate shall comply with Clause 602.2.4.2.

Fine aggregates: The fine aggregates shall consist of clean, natural sand or crushed stone sand or a combination of the two and shall conform to IS: 383. Fine aggregate shall be free from soft particles, clay, shale, loam, cemented particles, mica, organic and other foreign matter. The fine aggregate shall comply with Clause. The fine aggregate shall not contain deleterious substances more than the following:

Clay lumps 1.0 percent

Coal and lignite 1.0percent

Material passing IS Sieve No.75 micron

i) Natural sand (Uncrushed) 3.0 percent

ii) Crushed sand 8.0 percent

Thecoarse andfineaggregatesmaybeobtainedin either ofthefollowing manner:

i) In separate nominal sizes of coarse and fine aggregates and mixedtogether intimately before use.

ii) Separately as 31.5 mm nominal, 25 mm nominal single size, 12.5 mm nominal size graded aggregates and fine aggregate of crushed stone dust or sand or a combination of these three. They shall be mixed together in prescribed proportion before use.

iii) Combined flakiness and elongation index shall not be more than 35 percent.

The material after blending shall conform to the grading as indicated in Table 600-1.

Table 600-1 Aggregate Gradation for Dry Lean Concrete

SieveDesignation	**Percentagebyweightpassing theSieve**
31.5mm	100
26.50mm	90-95
19.0mm	80-90
9.50mm	55-75
4.75mm	35-60
600.00micron	10-35
75.00micron	0-8

Water: Water used for mixing and curing of concrete shall be clean and free from injurious amounts of oil, salt, acid, vegetable matter or other substances harmful to the finished concrete. It shall meet the requirements stipulated in IS: 456.

Storage of materials: All materials shall be stored in accordance with the provisions of Clause 1014 of these Specifications and other relevant IS Specifications. All efforts must be made to store the materials in proper places so as to prevent their deterioration or contamination by foreign matter and to ensure their satisfactory quality and fitness for use in the work. The storage place must also permit easy inspection, removal and storage of materials. All such materials even though stored in approved godowns must be subjected to acceptance test immediately prior to their use.

In case of aggregates, the storing place must be elevated from the ground atleast by 150 mm and should be a pucca paved platform i.e. cementitious treated GSB or soil or any other granular material or brick paving.

Proportioning of Materials for the Mix

The mix shall be proportioned with a maximum aggregate cement ratio of 15: 1. The water content shall be adjusted to the optimum as per Clause 601.3.2 for facilitating compaction by rolling. The strength and density requirements of concrete shall be determined in accordance with Clause 601.6 by making trial mixes. Care should be taken to prevent one fraction of aggregate falling into the other fraction of the hopper of the feeding bin while loading the individual fraction of aggregates into the bins.

Moisture content: The right amount of water for the lean concrete in the main work shall be decided so as to ensure full compaction under rolling and shall be assessed at the time of rolling the trial length. Too much water will cause the lean concrete to be heaving up before the wheels and picked up on the wheels of the roller and too little will lead to inadequate compaction, a low in-situ strength and an open-textured surface.

The optimum water content shall be determined and demonstrated by rolling during trial length construction and the optimum moisture content and degree of compaction shall be got approved from Engineer. While laying in the main work, the lean concrete shall have a moisture content between the optimum and optimum +2 percent, keeping in view the effectiveness of compaction achieved and to compensate for evaporation losses

Cement content: The minimum cement content in the lean concrete shall be 400 kg/cu.m of concrete. If this minimum cement content is not sufficient to produce concrete of the specified strength, it shall be increased as necessary by the Contractor at his own cost.

Concrete strength: The average compressive strength of each consecutive group of 5 cubes made shall not be less than 10 MPa at 7 days. In addition, the minimum compressive strength of any individual cube shall not be less than 7.5 MPa at 7 days. The design mix complying with the above Clauses shall be got approved from the Engineer and demonstrated in the trial length construction.

3.1.11.3 **Construction**

General: The pace and programme of the Dry Lean Concrete (DLC) sub-base construction shall be matching suitably with the programme of construction of the PQC over it. The DLC sub-base shall be overlaid with PQC only after 7 days of sub-base construction.

Batching and mixing: The batching plant shall be capable of proportioning the materials by weight, each type of material being weighed separately in accordance with Clause 602.9.3.2. The cement from the bulk stock shall be weighed separately from the aggregates. The capacity of batching and mixing plant shall be at least 25 percent

higher than the proposed capacity for the laying arrangements. The batching and mixing shall be carried out preferably in a forced action, central batching and mixing plant having necessary automatic controls to ensure accurate proportioning and mixing. Other types of mixing plant shall be permitted subject to demonstration of their satisfactory performance during the trial length. The type and capacity of the plant shall be got approved by the Engineer before commencement of the trial length. The weighing balances shall be calibrated by weighing with large weighing machine or in a weigh bridge. The accuracy of weighing scales of the batching plant shall be within ±2 percent in the case of aggregates and ±1 percent in the case of cement and water.

The design features of Batching Plant should be such that the shifting operations of the plant will not take long time when they are to be shifted from place to place with the progress of the work.

Transporting : Plant mix lean concrete shall be discharged immediately from the mixer, transported directly to the point where it is to be laid and protected from the weather by covering the tipping trucks with tarpaulin during transit. The concrete shall be transported by tipping trucks, sufficient in number to ensure a continuous supply of material to feed the laying equipment to work at a uniform speed and in an uninterrupted manner. The lead of the batching plant to paving site shall be such that the travel time available from mixing to paving as specified in Clause 601.5.5.2 will be adhered to. Tipping truck shall not have old concrete sticking to it. Each tipping truck shall be washed with water jet before next loading as and where required after inspection.

Placing: Lean concrete shall be placed by a paver with electronic sensor on sub-base/base. The equipment shall be capable of laying the material in one layer in an even manner without segregation, so that after completion the total thickness is as specified. The paving machine shall have high amplitude tamping bars to give good initial compaction to the sub-base. One day before placing of the dry lean cement concrete sub-base, the surface of the untreated granular sub-base/drainage layer shall be given a fine spray of water and rolled with a smooth wheeled roller.

The laying of a two-lane road sub-base may preferably be done in full width. In case of unavoidable situation lane by lane laying may be done. Preferably the lean concrete shall be placed and compacted across the full width of the road, by constructing it in one go or in two lanes paved forward simultaneously. No joints shall normally be constructed in Dry Lean Concrete construction except in the following situations.

Transverse butt type joint shall be provided at the end of the construction in a day. Longitudinal construction joint shall be provided only when lane by lane construction is done or in case of multiple lane exceeding two-lane, where pavers of adequate width capable of paving in one go are not available. Transverse joints in PQC shall not be co-terminus with the construction butt type joint of DLC. It shall be staggered from the construction butt type joint in DLC by 800-1000 mm.

Longitudinal joint in DLC shall be similarly staggered by 300-400 mm

from the longitudinal joint of PQC.

The DLC shall be laid in such a way that it is atleast 500 mm wider on each side than the proposed width including paved shoulders of PQC.

Compaction

The compaction shall be carried out immediately after the material is laid and levelled. In order to ensure thorough compaction, rolling shall be continued on the full width till there is no further visible movement under the roller and the surface is closed. The minimum dry density obtained shall be 98 percent of that achieved during the trial length construction vide Clause 601.7. The densities achieved at the edges i.e. 0.5 m from the edge shall not be less than 96 percent of that achieved during the trial construction vide Clause 601.7. The spreading, compacting and finishing of the lean concrete shall be carried out as rapidly as possible and the operation shall be so arranged as to ensure that the time between the mixing of the first batch of concrete in any transverse section of the layer and the final finishing of the same shall not exceed 90 minutes when the temperature of concrete is between 250C and 300C, and 120 minutes if less than 250C. This period may be reviewed by the Engineer in the light of the results of the trial run but in no case shall it exceed 120 minutes. Work shall not proceed when the temperature of the concrete exceeds 300C. If necessary, chilled water or addition of ice may be resorted to for bringing down the temperature. It is desirable to stop concreting when the ambient temperature is above 35°C. After compaction has been completed, roller shall not stand on the compacted surface for the duration of the curing period except during commencement of next day's work near the location where work was terminated the previous day.

Double drum smooth-wheeled vibratory rollers of minimum 80 to 100 kN static weight are suitable forrolling dry lean concrete. In case any other roller is proposed, the same shall be got approved from the Engineer, after demonstrating its performance. The number of passes required to obtain maximum compaction depends on the thickness of the dry lean concrete, the compatibility of the mix and the weight and type of the roller used. In-Situ density in green concrete by sand replacement method shall be determined and it will not be less 98 percent of the density in the trial length. The requirement of number of rollers shall be determined from the scale of the work to be undertaken.

In addition to the number of passes required (4-6) for compaction there shall be a preliminary pass without vibration to bed the Dry Lean Concrete down and again a final pass without vibration to remove roller marks and to smoothen the surface.

Special care and attention shall be exercised during compaction near joints, kerbs, channels, side forms and around gullies and manholes. In case adequate compaction is not achieved by the roller at these locations, use of plate vibrators shall be made, if so directed by the Engineer.

The final lean concrete surface on completion of compaction and

immediately before overlaying, shall be well closed, free from movement under roller and free from ridges, low spots, cracks, loose material, pot holes, ruts or other defects. The final surface shall be inspected immediately on completion and all loose, segregated or defective areas shall be corrected by using fresh lean concrete material laid and compacted as per Specifications. For repairing honeycombed/hungry surface, concrete with aggregates of size 10 mm and below shall be spread and compacted. It is necessary to check the level of the rolled surface for compliance. Any level/thickness deficiency should be corrected after applying concrete with aggregates of size 10 mm and below after roughening the surface. Similarly the surface regularity also should be checked with 3 m straight edge.

Segregation of concrete in the tipping trucks shall be controlled by moving the dumper back and forth whiledischarging the mix into the same or by any appropriate means. Even paving operation shall be such that the mix does not segregate.

Joints: Construction and longitudinal joints shall be provided as per the drawings.

At longitudinal or transverse construction joints, unless vertical forms are used, the edge of compacted material shall be cut back to a vertical plane where the correct thickness of the properly compacted material has been obtained.

Curing: As soon as the lean concrete surface is compacted, curing shall commence. One of the following two methods shall be adopted:

1. Where water is available, curing may be done by covering the surface by gunny bags/hessian, which shall be kept wet continuously for 7 days by sprinkling water.
2. Where water is scarce, one of the following may be used
    - The initial curing shall be done by spraying with white pigmented liquid curing compound conforming to ASTM-C 309-81. The curing compound shall be white pigmented or transparent type with water retention index of 90 percent when tested in accordance with BS:7542. Curing compound shall be sprayed immediately after rolling is completed. As soon as the curing compound has lost its tackiness, the surface shall be covered with wet hessian for four days.
    - Wax-based white pigmented curing compound with water retention index of 90 percent shall be used to cure the dry lean concrete. The curing compound shall conform to BS:7542. The compound shall be applied uniformly with a mechanical sprayer and with a hood to protect the spray from the wind. The curing compound shall be applied over the entire exposed surface of the DLC, including sides and edges, at the rate of 0.2 litres/Sqm.

    The first application, referred to as curing application shall be applied

immediately after the final rolling of DLC is completed. As soon as the curing compound loses tackiness, the surface shall be covered with wet hessian for four days. The second application of curing compound also referred to as the de-bonding application, shall be applied 24 to 48 hours prior to the PQC placement. Any damaged DLC shall be corrected prior to the second application. Normally, the manufacturer's instructions shall be followed for its application. After the second applications, no polythene separation membrane may be required.

3.1.11.4 **TrialMixes**

The Contractor shall make trial mixes of dry lean concrete with moisture contents like 5.0, 5.5, 6.0, 6.5 and 7.0 percent using cement content specified and the specified aggregate grading but without violating the requirement of aggregate-cement ratio specified in Clause 601.3.1. Optimum moisture and density shall be established by preparing cubes (150 mm x 150 mm) with varying moisture contents. Compaction of the mix shall be done in three layers with vibratory hammer fitted with a square or rectangular foot as described in Clause 903.5.1.1. After establishing the optimum moisture, a set of six cubes shall be cast at that moisture for the determination of compressive strength on the third and the seventh day. Trial mixes shall be repeated if the strength is not satisfactory either by increasing cement content or using higher grade of cement. After the mix design is approved, the Contractor shall construct a trial section in accordance with Clause 601.7.

If during the construction of the trial length, the optimum moisture content determined as above is found to be unsatisfactory, the Contractor may make suitable changes in the moisture content to achieve the satisfactory mix. The cube specimens prepared with the changed mix content should satisfy the strength requirement. Before production of the mix, natural moisture content of the aggregate should be determined on a day-to-day basis so that the moisture content could be adjusted. The mix finally designed should neither stick to the rollers nor become too dry resulting in ravelling of surface.

3.1.11.5 **Trial Length**

The trial length shall be constructed at least 14 days in advance of the proposed date of commencement of work. At least 30 days prior to the construction of the trial length, the Contractor shall submit for the Engineer's approval a "Method Statement" giving detailed description of the proposed materials, plant, equipment, mix proportions, and procedure for batching, mixing, laying, compaction and other construction procedures. The Engineer shall also approve the location and length of trial construction which shall be a minimum of 100 m length laid in two days and for full width of the pavement. The trial length shall contain the construction of at least one transverse construction joint involving hardened concrete and freshly laidD.L.C. sub-base. The construction of trial length shall be repeated till the Contractor proves his

ability to satisfactorily construct the D.L.C. sub-base.
Trial mixes shall be prepared as per Clause 601.6 in order to determine and demonstrate the optimum moisture content which results in the maximum dry density of the mix compacted by the rolling equipment and the minimum cement content that is necessary to achieve the strength stipulated in the drawing.
After the construction of the trial length, the in-situ density of the freshly laid material shall be determined by sand replacement method with 200 mm dia density cone. Three density holes shall be made at locations equally spaced along a diagonal that bisects the trial length, average of these densities shall be determined. These main density holes shall not be made in the strip 500 mm from the edges. The average density obtained from the three samples collected shall be the reference density and is considered as 100 percent. The field density of regular work will be compared with this reference density in accordance with Clauses 601.5.5.1 and903.5.1.2. Atleast three (evenly spread) cores of minimum 100 mm dia per km shall be cut to check segregation or any other deficiency like strength etc.
The hardened concrete shall be cut over 3 m width and reversed to inspect the bottom surface for any segregation taking place. The trial length shall be constructed after making necessary changesin the gradation of the mix to eliminate segregation of the mix. The lower surface shall not have honey-combing and the aggregates shall not be held loosely at the edges.
The trial length shall be outside the main works and shall not be less than 100 min length; laid in two days. The main work shall not start until the trial length has been approved by the Engineer. After approval has been given, the materials, mix proportions, moisture content, mixing, laying, compaction plant and construction procedures shall not be changed without the approval of the Engineer.

TolerancesforSurfaceRegularity,Level,Thickness,Densityand Strength

The tolerances for surface regularity, level, thickness, density and strength shall conform to the requirements given in Clause 903.5. Control of quality of materials and works shall be exercised by the Engineer in accordance with Section 900.

Traffic

No heavy commercial vehicles like trucks and buses shall be permitted on the dry lean concrete sub-base after its construction.

3.1.12 Pavement Quality concrete (Concrete Pavement)

3.1.12.1 **Scope**

The work shall consist of construction of un-reinforced, dowel jointed, plain cement concrete pavement in accordance with the requirements of these Specifications and in conformity with the lines, Minimum M 40 grade and cross sections shown on the drawings. The work shall include furnishing of all plant and equipment, materials and labour and performing all operations in connection with the work, as approved by the Engineer.

The design parameters, viz., thickness of pavement slab, grade of concrete, joint details etc. shall be as stipulated in the drawings.

3.1.12.2 **Materials**

Source of materials: The Contractor shall indicate to the Engineer the source of all materials to be used in the concrete work with relevant test data sufficiently in advance, and the approval of the Engineer for the same shall be obtained at least 45 days before the scheduled commencement of the work in trial length. If the Contractor subsequently proposes to obtain materials from a different source during the execution of main work, he shall notify the Engineer, with relevant test data, for his approval, at least 45 days before such materials are to be used.

Cement: Any of the following types of cement capable of achieving the design strength may be used with prior approval of the Engineer.

S.No.	Type
1.	Ordinary Portland Cement 43 Grade, Conforming to IS: 8112
2.	Ordinary Portland Cement 53 Grade, conforming to IS: 12269

Site mixing will not be allowed otherwise. Mix design will be minimum M40 grade and done as per IRC:44. The OPC content shall not be less than 400 kg/cum in case of blending at site. The curing period may be suitably enhanced by at least about 2 days.

If the soil around PQC has soluble salts like sulphates in excess of 0.5 percent, the cement used shall be sulphate resistant and shall conform to IS:12330.

Guidance may be taken from IRC:44 for ascertaining the compressive/flexural strength of cement concrete required to match with the prescribed design strength of concrete. Cement to be used may preferably be obtained in bulk form. If cement in paper bags is proposed to be used, there shall be bag- splitters with the facility to separate pieces of paper bags and dispose them off suitably. No paper pieces shall enter the concrete mix. Bulk cement shall be stored in accordance with Clause 1014. The cement shall be subjected to acceptance test just prior to its use.

3.1.12.3 **Chemical Admixtures:** Admixtures conforming to IS:9103 and IS:6925 shall be permitted to improve workability of the concrete or extension of setting time, on satisfactory evidence that they will not have any adverse effect on the properties of concrete with respect to strength, volume

change, and durability and have no deleterious effect on steel bars. The particulars of the admixture and the quantity to be used, must be furnished to the Engineer in advance to obtain his approval before use. Satisfactory performance of the admixtures should be proved both on the laboratory concrete trial mixes and in the trial length paving. If air entraining admixture is used, the total quantity of air in air-entrained concrete as a percentage of the volume of the mix shall be 5±1.5 percent for 31.5 mm nominal size aggregate.

Fibres: Fibres may be used subject to the provision in the design/approval by the Engineer to reduce the shrinkage cracking and post-cracking. The fibres may be steel fibre as per IRC:SP:46 or polymeric Synthetic Fibres within the following range of specifications:

>■ Effective Diameter 10 micron - 1.0 mm
;>. Length 6-48 mm
>- Specific gravity more than 1.0
;>- Suggested dosage 0.6-2.0 kg/cu.m (0.2 -0.6 % by weight of cement in mix).

Usage will be regulated as stipulated in IRC:44/IS:456 or any other specialist literature.

>- Water absorption less than 0.45 percent
;>- Melting point of this fibre shall not be less than 160°C.
;>. The aspect ratio generally varies from 200 to 2000.
>. These synthetic fibres will have good alkali and UV light resistance.

When fibres are used, the mix shall be so designed that the slump at paving concrete is 30±15 mm site.

3.1.12.4 **Aggregates**

Aggregates for pavement concrete shall be natural material complying with IS:383 but with a Los Angeles Abrasion Test result not more than 35 percent. The limits of deleterious materials shall not exceed the requirements set out in Table 600-2.

The aggregates shall be free from dirt flint, chalcedony or other silica in a form that can react with the alkalis in the cement. In addition, the total chlorides content expressed as chloride ion content shall not exceed 0.06 percent by weight and the total sulphate content expressed as sulphuric anhydride (SO3) shall not exceed 0.25 percent by weight. In case the Engineer considers that the aggregates are not free from dirt, the same may be washedand drained for atleast 72 hours before batching, as directed by the Engineer.

3.1.12.5 **Coarse aggregates**:

Coarse aggregates shall consist of clean, hard, strong, dense, non-porous and durable pieces of crushed stone or crushed gravel and shall be devoid of pieces of disintegrated stone, soft, flaky, elongated, very angular or

splintery pieces. The maximum size of coarse aggregate shall not exceed 31.5 mm for pavement concrete. Continuously graded aggregates shall be used as per Table 600-1, No aggregate which has water absorption more than 2 percent shall be used in the concrete mix. The aggregates shall be tested for soundness in accordance with IS:2386 (Part-5). After 5 cycles of testing, the loss shall not be more than 12 percent if sodium sulphate solution is used or 18 percent if magnesium sulphate solution is used. The combined flakiness and elongation index of aggregate shall not be more than 35 percent.

Dumping and stacking of aggregates shall be done in an approved manner.

3.1.12.6 **Fine aggregates:**

The fine aggregates shall consist of clean natural sand or crushed stone sand or a combination of the two and shall conform to IS:383. Fine aggregate shall be free from soft particles, clay, shale, loam, cemented particles, mica and organic and other foreign matter.

3.1.12.7 **Water:**

Water used for mixing and curing of concrete shall be clean and free from injurious amount of oil, salt, acid, vegetable matter or other substances harmful to the finished concrete. It shall meet the requirements stipulated in IS:456.

3.1.12.8 **Mild steel bars for dowels and tie bars :**

Dowel Bar shall be of minimum 32 mm dia, plain mild steel conforming to IS:432 and will have yield stress of Fe-240.

Tie bar shall be of 16 mm dia of TMT steel conforming to IS:1786 and will have yield stress of Fe-500.

Table 600-2 Permissible Limits of Deleterious Substances in Fine and Course Aggregates

Sl. No.	**Deleterious Substance**	**Method of Test**	**Fine Aggregate Percentage By Weight (Max)**		**Coarse Aggregate percentage by Weight (Max)**	
(1)	(2)	(3)	(4)	(5)	(6)	(7)
			Uncrushed*	Crushed	Uncrushed*	Crushed
i)	Coal and lignite	IS:2386(PartII)-1963	1.00	1.00	1.00	1.00
ii)	Clay lumps	do	1.00	1.00	1.00	1.00
iii)	Materials finer	IS:2386 (PartI)-1963	3.00	8.00	3.00	3.00

	than75µ ISSieve					
iv)	Softfragments	IS:2386(partII)-1963	-	-	3.00	-
v)	Shale	IS:2386(partII)-1963	1.00	-	-	-
vi)	Total of percentages of alldeleterious	-	5.00	2.00	5.00	5.00

* Crushedaggregateatleastonefacefractured

Note: The presence of mica in the fine aggregate has been found to reduce considerably the durability and compressive strength of concrete and further investigations are underway to determine the extent of the deleterious effect of mica. It is advisable, therefore, to investigate the mica content of fine aggregate and make suitable allowances for the possible reduction in the strength of concrete or mortar; in cases where the stretch of the project road passes through micacious belt.

3.1.12.9 **Premoulded joint filler**:

Joint filler board for expansion joints shall be used only at abutting structures like bridges and shall be of 20-25 mm thickness within a tolerance of ± 1.5 mm and of a firm compressible material and complying with the requirements of IS:1838, or BS:2630 “Preformed Joint Filler”. It shall be 25 mm less in depth than the thickness of the slab within a tolerance of ± 3 mm and provided to the full width between the side forms. It shall be in suitable lengths which shall not be less than one lane width. Holes to accommodate dowel bars shall be accurately bored or punched out to give a sliding fit on the dowel bars.

3.1.12.10 **Joint sealing compound:**

The joint sealing compound shall be of hot poured, elastomeric typebitumen or cold polysulphide/polyurethane/silicon type having flexibility, resistance to age hardening and durability as per IRC:57. Manufacturer’s certificate shall be produced by the Contractor for establishing that the sealant is not more than six months old and stating that the sealant complies with the relevant standard as in Clause 602.2.8. The samples shall meet the requirements as mentioned in IRC:57. Hot applied sealant shall be as per IS:1834.

Cold poured sealant shall be as under:

i)	Polysulphide	BS:5212,IS:11433
ii) Polyurethane		BS:5212
iii) Silicon		ASTM5893-96

3.1.12.11 **Storage of materials**:

All materials shall be stored in accordance with the provisions of Clause 1014 of the Specifications and other relevant IS Specifications. All efforts must be made to store the materials in proper places so as to prevent their deterioration or contamination by foreign matter and to ensure their satisfactory quality and fitness for the work. The platform where aggregates are stock piled shall be on a levelled platform elevated from the ground atleast by 150 mm. This platform will be a pucca paved platform. The area shall have slope and drain to drain off rain water. The storage space must also permit easy inspection, removal and storage of the materials. Aggregates of different sizes shall be stored in partitioned stack-yards. All such materials even though stored in approved godowns must be subjected to acceptance test as per clause 903 of these specifications immediately prior to their use.

3.1.12.12 **Proportioning of Concrete:**

After approval by the Engineer of all materials to be used in the concrete, the Contractor shall submit the mix design based on weighed proportions of all ingredients for the approval of the Engineer. The mix design shall be submitted at least 30 days prior to the paving of trial length and the design shall be based on laboratory trial mixes using the approved materials and methods as per IRC:44 or IS:10262 (Recommended Guidelines for Mix Design). The target mean strength for the design mix shall be determined as indicated in Clause 602.3.3.1. The mix design shall be based on the flexural strength of concrete

3.1.12.13 **Cement content:**

When Ordinary Portland Cement (OPC) is used the quantity of cement shall not be less than 400 kg/cum.If this minimum cement content is not sufficient to produce concrete of the specified strength, it shall be increased as necessary by the Contractor at his own cost.

3.1.12.14 **Concretestrength**

The characteristic flexural strength of concrete shall not be less than 4.5 MPa (M 40 Grade). Target mean flexural strength for mix design shall be more than 4.5 MPa + 1.65*s, where s is standard deviation of flexural strength derived by conducting test on minimum 30 beams. While designing the mix in the laboratory, correlation between flexural and compressive strengths of concrete shall be established on the basis of at least thirty tests on samples. However, quality control in the field shall be exercised on the basis of flexural strength. It may, however, be ensured that the materials and mix proportions remain substantially unaltered during the daily concrete production. The water content shall be the minimum required to provide the agreed workability for full compaction of the concrete to the required density as determined by the trial mixes or as approved by the Engineer and the maximum free water cement ratio

shall be 0.45 when only OPC is used and 0.50 when blended cement (Portland Pozzolana Cement or Portland Slag Cement or OPC blended with fly ash or Ground Granulated Blast Furnace Slag at site) is used.
The ratio between the 7 and 28 day strength shall be established for the mix to be used in the slab in advance, by testing pairs of beams and cubes at each stage on at least six batches of trial mix. The average strength of the 7 day cured specimens shall be divided by the average strength of the 28 day specimens for each batch, and the ratio "R' shall be determined. The ratio 'R' shall be expressed to three decimal places.
If during the construction of the trial length or during some normal working, the average value of any four consecutive 7 day test results falls below the required 7 day strength as derived from the value of 'R' then the cement content of the concrete shall, without extra payment, be increased by 5 percent by weight or by an amount agreed by the Engineer. The increased cement content shall be maintained at least until the four corresponding 28 day strengths have been assessed for in conformity with the requirements as per Clause 602.3.1. Whenever the cement content is increased, the concrete mix shall be adjusted to maintain the required workability.

3.1.12.15 **Workability**

The workability of the concrete at the point of placing shall be adequate for the concrete to be fully compacted and finished without undue flow. The optimum workability for the mix to suit the paving plant being used shall be determined by the Contractor and approved by the Engineer. The control of workability in the field shall be exercised by the slump test as per IS:1199.
The workability requirement at the batching and mixing plant and paving site shall be established by slump tests carried during trial paving. These requirements shall be established from season to season and also when the lead from batching and mixing plant site to the paving site changes. The workability shall be established for the type of pavingequipment available. A slump value in the range of 30 ± 15 mm is reasonable for paving works but this may be modified depending upon the site requirement and got approved by the Engineer. These tests shall be carried out on every truck/dumper at batching and mixing plant site and paving site initially when the work commences but subsequently the frequency can be reduced to alternate trucks or as per the instructions of the Engineer.

3.1.12.16 **Designmix**

The Contractor shall carry out laboratory trials of design mix with the materials from the approved sources to be used. Trial mixes shall be made in presence of the Engineer or his representative and the design mix shall be subject to the approval of the Engineer. They shall be repeated, if necessary, until the proportions that will produce a concrete which complies in all respects with these Specification, and conform to

the requirements of the design/drawings.

The proportions determined as a result of the laboratory trial mixes may be adjusted, if necessary, during the construction of the trial length. Thereafter, neither the materials nor the mix proportions shall be varied in any way except with the written approval f the Engineer.

Any change in the source of materials or mix proportions proposed by the Contractor during the course of work shall be assessed by making laboratory trial mixes and the construction of a further trial length unless approval is given by the Engineer for minor adjustments like compensation for moisture content in aggregates or minor fluctuations in the grading of aggregate.

3.1.12.17 **Sub-base**

The cement concrete pavement shall be laid over the DLC sub-base constructed in accordance with the relevant drawings and Specifications contained in Clause 601. The DLC will be laid on GSB as per Clause 400. If the DLC sub-base is found damaged atsome places or it has cracks wider than 10 mm, it shall be repaired with fine cement concrete or bituminous concrete before laying separation membrane layer. Prior to laying of concrete it shall be ensured that the separation membrane as per Clause 602.5 is placed in position and the same is clean of dirt or other extraneous materials and free from any damage.

Mixing and Granular sub base material or in a pug mill shall be done mechanically in a separate yard through motor grader to ensure uniform mixing. Mix-in-place method will normally not be allowed except in exceptional situation, with the approval of the Engineer. The DLC sub-base/WMM/base (treated with cement etc.) of grading specified in the Contract shall be spread on the prepared sub-grade with the help of a motor grader of adequate capacity, its blade having hydraulic controls suitable for initial adjustment and for maintaining the required slope and grade during the operation or other means as approved by the Engineer. The surface levels and surface regularity shall be as per provision contained in IRC:SP:16.

Emerging literature suggests alternative for both DLC and separation membrane. Due to lack of indigenous experience available, the same are not provided in these Specifications. It is, however, felt that these alternative Specifications may be tried atleast on experimental basis, by consulting specialist literature. Some of such possible alternatives are laying PQC on base course like WMM, soil treated with cement (cementitious material) as instead of DLC. Design of PQC in such cases, shall include checking against pumping/erosion besides fatigue. Two courses of wax based curing compound or two coats of bitumen or 5 mm thick non-woven geo-fabric sheet, instead of polythene film are some of the emerging alternatives for membrane.

DLC sub-base shall be laid with paver and not with grader.

3.1.12.18 **SeparationMembrane**

A separation membrane shall be used between the concrete slab and

the sub-base. Separation membrane shall be impermeable PVC sheet 125 micron thick transparent or white in colour laid flat with minimum creases. Before placing the separation membrane, the sub-base shall be swept clean of all the extraneous materials using air compressor. Wherever overlap of plastic sheets is necessary, the same shall be at least 300 mm and any damaged sheathing shall be replaced at the Contractor's cost. The separation membrane may be nailed to the lower layer with concrete nails.

3.1.12.19 **Joints**

The locations and type of joints shall be as shown in the drawing. Joints shall be constructed depending upon their functional requirement. The location of the joints should be transferred accurately at the site and mechanical saw cutting of joints done as per stipulated dimensions. It shall be ensured that the required depth of cut is made from edge-to-edge of the pavement. Transverse and longitudinal joints in the pavement (PQC) and DLC sub-base shall be staggered so that they are not coincident vertically and are at least 800 to 1000 mm and 300 to 400 mm apart respectively. Sawing of joints shall be carried out with diamond studded blades soon after the concrete has hardened to take the load of the sawing machine and personnel without damaging the texture of the pavement.

Sawing operation could start as early as 5-6 hours after laying of PQC but not later than 18 to 20 hours depending upon the ambient temperature, wind velocity and relative humidity and required maturity of concrete achieved for this purpose.

When the kerb is cast integrally with the main pavement slab, the joint cutting shall also be extended to the kerb.

When on instructions of the Engineer, the use of maturity meter is specified, sawing should not be initiated when the compressive strength of the concrete is less than 2 MPa and should be completed before it attains the compressive strength of 7 MPa.

Transverse joints

Transverse joints shall be contraction and expansion joints constructed at the spacing described in the drawings. Transverse joints shall be straight within the following tolerances along the intended line of joints which is the straight line transverse to the longitudinal axis of the carriageway at the position proposed by the Contractor and agreed to by the Engineer, except at road junctions or roundabouts where the position shall be as described in the drawings:

i) Deviations of the filler board in the case of expansion joints from the intended line of the joint shall not be greater than ± 10 mm.

ii) The best fit straight line through the joint grooves as constructed shall be not more than 25 mm from the intended line of the joint.

iii) Deviations of the joint groove from the best fit straight line of the joint shall not be greater than 10 mm.

iv) Transverse joints on each side of the longitudinal joint shall be in line with each other and of the same type and width. Transverse joints shall have a sealing groove which shall be sealed in compliance with Clause 602.11.

v) **Contraction joints**: The contraction joints shall be placed transversely at pre- specified locations as per drawings/design using dowel bars. These joints shall be cut as soon as the concrete has undergone initial hardening and is hard enough to take the load of joint sawing machine without causing damage to the slab.

vi) Contraction joints shall consist of a mechanical sawn joint groove, 3 to 5 mm wide and ¼th to 1 3 rd depth of the slab ± 5 mm or as stipulated in the drawings and dowel bars complying with Clause 602.6.5.

vii) Contraction joint shall be widened subsequently accommodate the sealant as per Clause 602.11, to dimensions shown on drawings or as per IRC:57.

3.1.12.20 **Expansion joints:**

The expansion joints shall consist of a joint filler board complying with Clause 602.2.7 and dowel bars complying with Clause 602.6.5 and as detailed in the drawings. The filler board shall be positioned vertically with the prefabricated joint assemblies along the line of the joint within the tolerances given in Clause 602.6.2.1 and at such depth below the surface as will not impede the passage of the finishing straight edges or oscillating beams of the paving machines. The adjacent slabs shall be completely separated from each other by providing joint filler board. Space around the dowel bars, between the sub-base and the filler board shall be packed with a suitable compressible material to block the flow of cement slurry.

Transverse construction joint : Transverse construction joint shall be placed whenever concreting is completed after a day's work or is suspended for more than 30 minutes. These joints shall be provided at location of constructing joints using dowel bars. The construction joints may preferably coincide with the pre-specified location of construction joints by properly planning the day to day concreting work of PQC. The joint shall be made butt type. At all construction joints, steel bulk heads shall be used to retain the concrete while the surface is finished. The surface of the concrete laid subsequently shall conform to the grade and cross sections of the previously laid pavement. When positioning of bulk head/stop-end is not possible, concreting to an additional 1 or 2 m length may be carried out to enable the movement of joint cutting machine so that joint grooves may be cut and the extra 1 or 2 m length is cut out and removed subsequently after concrete has hardened.

Like contraction joint, the construction joint shall also be widened to

dimensions shown on drawing or as per IRC:57, not before 14 days curing of PQC.

Longitudinal joint

The longitudinal joints shall be saw cut as per details of the joints shown in the drawing or as per dimensions given in IRC:57. The groove may be cut after the final set of the concrete. Joints should be sawn to at least 1 3 rdthe depth of the slab ±5 mm as indicated in the drawing.

Tie bars shall be provided at the longitudinal joints as per dimensions and spacing shown in the drawing and in accordance with Clause 602.6.6.

Longitudinal joint shall also be widened to dimensions shown on drawing or as per IRC:57, not before 14 days curing of PQC.

3.1.12.21 **Dowel bars**

Dowel bars shall be mild steel rounds in accordance with Clause 602.2.6 with details/dimensions as indicated in the drawings and free from oil, dirt, loose rust or scale. They shall be straight, free of irregularities and burring restricting slippage in the concrete. The sliding ends shall be sawn or cropped cleanly with no protrusions outside the normal diameter of the bar. To remove any protrusions, the ends ofthe dowel bars shall be suitably grounded. The dowel bar shall be supported on cradles/dowel chairs in pre- fabricated joint assemblies positioned prior to the construction of the slabs or mechanically inserted with vibration into the plastic concrete by a method which ensures correct placement of the bars besides full re- compaction of the concrete around the dowel bars. Modern slip form pavers are equipped with automatic dowel bar inserter (DBI).

Unless shown otherwise on the drawings, dowel bars shall be positioned at mid depth of the slab within a tolerance of ±20 mm, and centred equally about intended lines of the joint within a tolerance of ±25 mm. They shall be aligned parallel to the finished surface of the slab and to the centre line of the carriageway and to each other within tolerances given hereunder, the compliance of which shall be checked as per Clause 602.10.7.

i) For bars supported on cradles prior to the laying of the slab:

a) All bars in a joint shall be within ±3 mm per 300 mm length of bar

b) 2/3rd of the number of bars shall be within ±2 mm per 300 mm length of bar

c) No bar shall differ in alignment from an adjoining bar by more than 3 mm per 300 mm length of bar in either the horizontal or vertical plane

d) Cradles supporting dowel bar shall not extend across the line of joint i.e. no steel bar of the cradle assembly shall be continuous across the joint.

e) For all bars inserted after laying of the slab the tolerance for alignment may be twice as indicated in (i) above.

Dowel bars, supported on cradles in assemblies, whensubject to a load of

110 N applied at either end and in either the vertical or horizontal direction (upwards and downwards and both directions horizontally) shall conform to be within the limits given in Clause

The assembly of dowel bars and supporting cradles, including the joint filler board in the case of expansion joints, shall have the following degree of rigidity when fixed in position:-

i) For expansion joints, the deflection of the top edge of the filler board shall be not greater than 13 mm, when a load of 1.3 kN is applied perpendicular to the vertical face of the joint filler board and distributed over a length of 600 mm by means of a bar or timber packing, at mid depth and midway between individual fixings, or 300 mm from either end of any length of filler board, if a continuous fixing is used. The residual deflection after load shall be not more than 3 mm.

ii) The joint assembly fixing to sub-base shall not fail under the 1.3 kN load applied for testing the rigidity of the assembly but shall fail before the load reaches 2.4 kN.

iii) The fixings for contraction joint shall not fail under 1.3 kN load and shall fail before the load reaches 2.6 kN when applied over a length of 600 mm by means of a bar or timber packing placed as near to the level of the line of fixings as practicable.

iv) Fixings shall be deemed to fail when there is displacement of the assemblies by more than 3 mm with any form of fixing, under the test load. The displacement shall be measured at the nearest part of the assembly to the centre of the bar or timber packing.

Dowel bars in the contraction joints, construction joints and expansion joints shall be covered by a thin plastic sheath. The sheath shall be not more than 125 micron thick and shall be tightly fitted on the bar for at least two-thirds of the length from one end for dowel bars in contraction joints or half the length plus 50 mm for expansion joints. The sheathed bar shall comply with the following pull-out tests:

i)Four bars shall be taken at random from stock and without any special preparation shall be covered by sheaths as required in this Clause. The ends of the dowel bars which have been sheathed shall be cast centrally into concrete specimens 150 mm x 150 mm x 600 mm, made of the same mix proportions to be used in the pavement, but with a maximum nominal aggregate size of 20 mm and cured in accordance with IS:516. At 7 days a tensile load shall be applied to achieve a movement of the bar of at least 0.25 mm. The average bond stress to achieve this movement shall not be greater than 0.14 MPa.

For expansion joints, a closely fitting cap 100 mm long consisting of waterproofed cardboard or an approved synthetic material like PVC or GI pipe shall be placed over the sheathed end of each dowel bar. An expansion space (about 25 mm) at least equal in length to the thickness of the joint filler board shall be formed between the end of the cap and the end of the dowel bar by using compressible sponge. To block the

entry of cement slurry between dowels and cap it shall be taped.

3.1.12.22 **Tiebars**

Tie bars in longitudinal joints shall be deformed steel bars of strength 500 MPa complying with IS:1786 and in accordance with the requirements given in this Clause. The bars shall be free from oil, dirt, loose rust and scale.

Tie bars projecting across the longitudinal joint shall be protected from corrosion for 75 mm on each side of the joint by a protective coating of bituminous paint with the approval of the Engineer. The coating shall be dry when the tie bars are used. In the case of coastal region, tie bars shall be epoxy coated as per IS:13620.

Tie bars in longitudinal joints shall be made up into rigid assemblies with adequate supports and fixings to remain firmly in position during the construction of the slab. Alternatively, tie bars at longitudinal joints may be mechanically or manually inserted into the plastic concrete from above by vibration using a method which ensures correct placements of the bars and re-compaction of the concrete around the tie bars. The modernslip form pavers are equipped with automatic tie bar inserter (TBI).

Tie bars shall be positioned to remain within the upper middle third of the slab depth as indicated in the drawings and approximately parallel to the surface and approximately perpendicular to the line of the joint, with the centre of each bar on the intended line of the joints within a tolerance of ±50 mm, and with a minimum cover of 30 mm below the joint groove.

3.1.12.23 **Weatherand Seasonal Limitations**

Concreting during monsoon months: Concreting should be avoided during rainy season. However, when concrete is being placed during monsoon months and when it may be expected to rain, sufficient supply of tarpaulin or other waterproof cloth shall be provided along the line of the work. Any time when it rains, all freshly laid concrete which had not been covered for curing purposes shall be adequately protected. Any concrete damaged by rain shall be removed and replaced. If the damage is limited to texture, it shall be retextured in accordance with the directions of the Engineer.

Temperaturelimitation

No concreting shall be done when the concrete temperature is above 30°C. Besides, in adverse conditions like high temperature, low relative humidity, excessive wind velocity, imminence of rains etc., tents on mobile trusses may be provided over the freshly laid concrete for a minimum period of 3 hours as directed by the Engineer. The temperature of the concrete mix on reaching the paving site shall not be more than 30°C. To bring down the temperature, if necessary, chilled water or ice flakes should be made use of. When the ambient temperature is more than 350C, no concreting shall be permitted.

No concreting shall be done when the concrete temperature is below 50C and the temperature is further falling.

Side Forms, Rails and Guidewires

Side forms handrails: These shall be provided in case of fixed form paving. All side forms shall be of mild steel of depth equal to the thickness of pavement or slightly less to accommodate the surface regularity of the sub- base. The forms can be placed in series of steel packing plates or shims to take care of irregularity of sub- base. They shall be sufficiently robust and rigid to support the weight and pressure caused by a paving equipment. Side forms for use with wheeled paving machines shall incorporate metal rails firmly fixed at a constant height below the top of the forms. The forms and rails shall be firmly secured in position by not less than 3 stakes/pins for every 3 m length so as to prevent movement in any direction. Forms and rails shall be straight within a tolerance of 3 mm in 3 m and when in place shall not settle in excess of 1.5 mm in 3 m while paving is being done. Forms shall be cleaned and oiled immediately before each use. The forms shall be bedded on a continuous bed of low moisture content lean cement mortar or concrete and set to the line and levels shown on the drawings within tolerances ±10 mm and ±3 mm respectively. The bedding shall not extend under the slab and there shall be no vertical step between adjacent forms of more than 3 mm. The forms shallbe got inspected by the Engineer for his approval before 12 hours on the day before the construction of the slab and shall not be removed until at least 12 hours afterwards.

At all times sufficient forms shall be used and set to the required alignment for at least 300 m length of pavement immediately in advance of the paving operations, or the anticipated length of pavement to be laid within the next 24 hours whichever is more.

Use of guidewires

Where slip form paving is proposed, a guide wire shall be provided along both sides of the slab. Each guide wire shall be at a constant height above and parallel to the required edges of the slab as described in the contract/drawing within a vertical tolerance of ±3 mm. Additionally, one of the wires shall be kept at a constant horizontal distance from the required edge of the pavement as indicated in the contract drawing within a lateral tolerance of ±10 mm.

The guide wires shall be supported on stakes not more than 6 m apart by connectors capable of fine horizontal and vertical adjustment. The guide wire shall be tensioned on the stakes so that a 500 gm weight shall produce a deflection of not more than 20 mm when suspended at the mid point between any pair of stakes. The ends of the guide wires shall be anchored to fixing point or winch and not on the stakes. On the curves, the stakes shall be fixed at not more than 3 m centre-to-centre.

The stakes shall be positioned and hammered into the ground and the connectors will be maintained at their correct height and alignment from 12 hours on the day before concreting takes place until 12 hours after finishing of the concrete.

The guide wire shall be erected and tensioned on the connectors at any section for at least 2 hours before concreting that section.

The Contractor shall submit to the Engineer for his approval of line and level, the stakes and connectors which are ready for use in the length of road to be constructed by 12 hours on the working day before the day of construction of slab. Any deficiencies noted by the Engineer shall be rectified by the Contractor who shall then re-apply for approval of the affected stakes. Work shall not proceed until the Engineer has given his approval. It shall be ensured that the stakes and guide wires are not affected by the construction equipment when concreting is in progress.

3.1.12.24 **Construction**

General : A systems approach may be adopted for construction of the pavement, and the Method Statement for carrying out the work, detailing all the activities, indication of time-cycle, equipment, personnel etc., shall be got approved from the Engineer before the commencement of the work. This shall include the type, capacity and make of the batching and mixing plant besides the hauling arrangement and paving equipment. The capacity of paving equipment, batching plant as well as all the ancillary equipment shall be adequate for a paving rate of atleast 500 m in one day. The desirable paving speed of slip form pavers is 1.0 m per minute, but it shall not be less than 0.6 m per minute average. The concreting should proceed continuously without stop & start.

Batching and mixing: Batching and mixing of the concrete shall be done at a central batching and mixing plant with automatic controls, located at a suitable place which takes into account sufficient space for stockpiling of cement, aggregates and stationary water tanks. This shall be, however, situated at an approved distance, duly considering the properties of the mix and the transporting arrangements available with the Contractor.

The dose of plasticizer/super plasticizer shall be added in the end of input of all ingredients i.e. when cement, aggregate, fly ash and water etc. have been thoroughly mixed. Proper dispersal of plasticizer/super plasticizer and air entraining agent (when used) shall be ensured.

Tipping trucks shall be washed at a regular frequency as prescribed by the Engineer to ensure that no left- over mix of previous loading remains stuck. Desirably each tipping truck shall be washed with water jet before next loading.

3.1.12.25 **Equipment for proportioning of materials and paving**

Proportioning of materials shall be done in the batching plant by weight, each type of material being weighed separately. The cement from the bulk stock may be weighed separately from the aggregates. Water shall be measured by volume. Specified percentage of plasticizer in volume will be added by weight of cement. Wherever properly graded aggregate of uniform quality cannot be maintained as envisaged in the mix design, the grading of aggregates shall be controlled by appropriate blending techniques. The capacity of batching and mixing plant shall be at least 25 percent higher than the proposed capacity of the laying/paving

equipment.

Batching plant and equipment:

1) **General:** The batching plant shall include minimum four bins, weighing hoppers, and scales for the fine aggregates and for each size of coarse aggregate. If cement is used in bulk, a separate scale for cement shall be included. The weighing hoppers shall be properly sealed and vented to preclude dust during operation. Approved safety devices shall be provided and maintained for the protection of all personnel engaged in plant operation, inspection and testing. The batch plant shall be equipped with a suitable non-resettable batch counter which will correctly indicate the number of batches proportioned.

2) **Bins and hoppers:** Bins with minimum number of four adequate separate compartments shall be provided in the batching plant.

3) **Automatic weighing devices:** Batching plant shall be equipped to proportion aggregates and bulk cement by means of automatic weighing devices using load cells.

4) **Mixer:** Mixers shall be pan type, reversible type or any other mixer capable of combining the aggregates, cement, and water into a thoroughly mixed and uniform mass within the specified mixing period, and of discharging the mix, without segregation. Each stationary mixer shall be equipped with an approved timing device which will automatically lock the discharge lever when the drum has been charged and release it at the end of the mixing period. The device shall be equipped with a bell or other suitable warning device adjusted to give a clearly audible signal each time the lock is released. In case of failure of the timing device, the mixer may be used for the balance of the day while it is being repaired, provided that each batch is mixed in 90 seconds or as per the manufacturer's recommendation. The mixer shall be equipped with a suitable non-resettable batch counter which shall correctly indicate the number of batches mixed.

The mixers shall be cleaned at suitable intervals. The pick-up and throw-over blades in the drum or drums shall be repaired or replaced when they are worn down 20 mm or more. The Contractor shall (1) have available at the job site a copy of the manufacturer's design, showing dimensions and arrangements of blades in reference to original height and depth, or (2) provide permanent marks on blade to show points of 20 mm wear from new conditions. Drilled holes of 5 mm diameter near each end and at midpoint of each blade are recommended. Batching Plant shall be calibrated in the beginning and thereafter at suitable interval not exceeding 1 month.

5) **Control cabin :** An air-conditioned centralized computer control cabin shall be provided for automatic operation of the equipment.

Paving equipment : The concrete shall be placed with an approved fixed form or slip form paver with independent units designed to (i) spread, (ii) consolidate, screed and flat-finish, (iii) texture and cure the freshly placed concrete in one complete pass of the machine in such a manner that a

minimum of hand finishing will be necessary and so as to provide a dense and homogeneous pavement in conformity with the plans and Specifications. The paver shall be equipped with electronic sensor controls to control the line and grade from either or both sides of the machine.

Vibrators shall operate at a frequency of 8000-10000 impulses per minute under load at a maximum spacing of 600 mm. The variable vibration setting shall be provided in the machine.

Concrete saw: The Contractor shall provide adequate number of concrete saws with sufficient number of diamond-edge saw blades. The saw machine shall be either electric or petrol/diesel driven type. A water tank with flexible hoses and pump shall be made available in this activity on priority basis. The Contractor shall have at least one stand by saw in good working condition. The concreting work shall not commence if the saws are not in working condition.

Hauling and placing of concrete

Freshly mixed concrete from the central batching and mixing plant shall be transported to the paver site by means of tipping trucks of sufficient capacity and approved design in sufficient numbers to ensure a constant supply of concrete. Covers shall be used for protection of concrete against the weather. While loading the concrete trucks shall be moved back and forth under the discharge chute to prevent segregation. The tipping trucks shall be capable of maintaining the mixed concrete in a homogeneous state and discharging the same without segregation and loss of cement slurry. The feeding to the paver is to be regulated in such a way that the paving is done in an uninterrupted manner with a uniform speed throughout the day's work.

3.1.12.26 **Placing of concrete**

Concrete mixed in central mixing plant shall be transported to the site without delay and the concrete which, in the opinion of the Engineer has been mixed too long before laying will be rejected and shall be removed from the site.

The total time taken from the addition of the water to the mix, until the completion of the surface finishing and texturing shall not exceed 120 minutes when concrete temperature is less than 25°C and 90 minutes when the concrete temperature is between 25°C and 30°C. Tipping trucks delivering concrete shall normally not run on plastic sheathingnor shall they run on completed slabs until after 28 days of placing the concrete.

The placing of concrete in front of the PQC paver should preferably be from the side placer to avoid damage to DLC by concrete tipping trucks. In case of unavoidable situation, truck supplying PQC concrete to the paver may be allowed to ply on the DLC with the approval of the Engineer. The paver shall be capable of paving the carriageway as shown in the drawings, in a single pass and lift. Equipments or accessory to support the edges of concrete by means of steel plates shall be

maintained in position by screwed jacks.

Where fixed form pavers are to be used, forms shall be fixed in advance as per Clause 602.8. Before any paving is done, the site shall be shown to the Engineer, in order to verify the arrangement for paving besides placing of dowels, tie-bars etc., as per the relevant Clauses of these Specifications. The mixing and placing of concrete shall progress only at such a rate as to permit proper finishing, protecting and curing of the concrete in the pavement.

In all cases, the temperature of the concrete shall be measured at the point of discharge from the delivery vehicle.

The addition of water to the surface of the concrete to facilitate the finishing operations will not be permitted except with the approval of the Engineer when it shall be applied as a mist by means of approved equipment.

If considered necessary by the Engineer, the paving machines shall be provided with approved covers to protect the surface of the slab under construction from direct sunlight and rain or hot wind.

While the concrete is still plastic, its surface shall be textured by brush or tines as per the instructions of the Engineer in compliance with Clause 602.9.8. The surface and edges of the slab shall be cured by the application of a sprayed liquid curing membrane in compliance with Clause 602.9.9. After the surface texturing, but before the curing compound is applied, the concrete slab shall be marked with the chainage at every 100 m interval by embossing.

As soon as the side forms are removed, edges of the slabs shall be corrected wherever irregularities have occurred by using fine concrete composed of one part of cement to 3 parts of aggregate [1:1:2, cement : sand : coarse aggregate (10 mm down)] and fine aggregates under the supervision of the Engineer.

If the requirement of Clause 902.4. for surface regularity fails to be achieved on two consecutive working days, then normal working shall cease until the cause of the excessive irregularity has been identified and remedied.

3.1.12.27 **Construction by fixed form paver**

The fixed form paving train shall consist of separate powered machines which spread, compact and finish the concrete in a continuous operation. The concrete shall be discharged without segregation into a hopper spreader which is equipped with means for controlling its rate of deposition on to the sub-base. The spreader shall be operated to strike off concrete upto a level requiring a small amount of cutting down by the distributor of the spreader. The distributor of spreader shall strike off the concrete to the surcharge adequate to ensure that the vibratory compactor thoroughly compacts the layer. If necessary, poker vibrators shall be used adjacent to the side forms and edges of the previously constructed slab. The vibratory compactor shall be set to strike off the surface slightly high so that it is cut down to the required level by the oscillating beam. The machine shall be capable of being rapidly adjusted

for changes in average and differential surcharge necessitated by changes in slab thickness or cross fall. The final finisher shall be able to finish the surface to the required level and smoothness as specified, care being taken to avoid bringing up of excessive mortar to the surface by over working.

3.1.12.28 **Construction by slip form paver**

The slip form paving train shall consist of power machine which spreads, compacts and finishes the concrete in a continuous operation. The slip form paving machine shall compact the concrete by internal vibration and shape it between the sides forms with either a conforming plate or by vibrating and oscillating finishing beams. The concrete shall be deposited without segregation in front of slip form paver across the whole width and to a height which at all times is in excess of the required surcharge. The deposited concrete shall be struck off to the necessary average and differential surcharge by means of the strike off plate or a screw auger device extending across the whole width of the slab. The equipment for striking-off the concrete shall be capable of being rapidly adjusted for changes of the average and differential surcharge necessitated by change in slab thickness or cross fall.

The level of the conforming plate and finishing beams shall be controlled automatically from the guide wires installed as per Clause 602.8 by sensors attached at the four corners of the slip form paving machine. The alignment of the paver shall be controlled automatically from the guide wire by at least one set of sensors attached to the paver. The alignment and level of ancillary machines for finishing, texturing and curing of the concrete shall be automatically controlled relative to the guide wire or to the surface and edge of the slab.

Slip-form paving machines shall have vibrators of variable output, with a maximum energy output of not less than 2.5 KW per metre width of slab per 300 mm depth of slab for a laying speed upto 1.5 m per minute. The machines shall be of sufficient mass to provide adequate reaction during spreading and paving operations on the traction units to maintain forward movements during the placing of concrete in all situations.

If the edges of the slip formed slab slump to the extent that the surface of the top edge of the slab does not comply with the requirements of Clause 602.14, then special measures such as fixing of side forms held in position by screwed jacks or any other suitable device approved by the Engineer shall be taken to support the edges to the required levels and work shall be stopped until such time as the Contractor can demonstrate his ability to slip form the edges to the required levels.

Pavers with adequate width to pave the entire carriageway width in one go will be employed. Paving in part width will be avoided, except in unavoidable circumstances. In case of part width paving, care will be taken to ensure that while paving the next lane bond between the old concrete and newly laid concrete is properly formed to develop adequate bond strength between tie bars and concrete as specified in IRC:58 (Appendix-4 of IRC:58). Care shall be taken to avoid damage to the

previous lane.

Work on next lane shall be permitted when the previously paved lane is cured for at least14 days and is in a position to bear the weight of paving machines. When the wheels or crawler tracks are to ply on the already paved surface, necessary precautions shall be taken by placing protective pads of rubber or similar material so that texture is not damaged. The wheel or track shall be reasonably away from the edge to avoid damage to the previously paved slab.

Upon the instructions of the Engineer, Contractor shall scrape the concrete surface when in plastic state with a 3 m long tube float fixed with a long and stable handle before texturing. Tube float shall be of an alloy steel tube of 50 to 60 mm diameter with a long and stable handle. The length of tube float shall preferably be longer than half the length of slab i.e., half the distance between two transverse contractions joints. This operation shall be done to improve surface irregularity caused due to varied causes like frequent stoppages of work,surface deformation due to plastic flow etc. The tube float shall be placed at the centre of the slab parallel to longitudinal joint and pulled slowly and uniformly towards the edges. After the use of float tube, it shall be frequently cleaned before further use. The slurry removed shall be discarded. This activity shall be advanced laterally by providing an overlap of half the length of tube float. The removal of the cement slurry from the surface shall be sufficient enough such that the texture is formed on a firm surface and is more durable. This operation, however, shall be carried out after removing bleeding water. This operation shall be done in the case of pavement construction using fixed form or slip form paving technique.

3.1.12.29 **Semi-Mechanised and Labour-Oriented Construction Technique:**

Areas in which hand-guided methods of construction become indispensable shall be got approved by the Engineer in writing in advance. Such work may be permitted only in restricted areas in small lengths. Work shall be carried out by skilled personnel as per methods approved by the Engineer. The acceptance criteria regarding level, thickness, surface regularity, texture, finish, strength, of concrete and all other quality control measures shall be the same as in the case of machine laid work. Guidelines on the use of plants, equipment, tools, hauling of mix, compaction floating, straight edging, texturing, edging etc. shall be as per IRC:15 (Clause 9.10).

Transition slabs: At the interface of rigid and flexible pavement, at least 3 m long reinforced buried slab should be provided to give a long lasting joint at the interface. The details shall be as given in IRC:15 (Clause 9.10.11, Fig. 3).

The treatment of PQC on Culverts : The PQC shall be taken over the culverts. At both ends of the abutment walls, expansion joint with 12 mm thick synthetic board shall be provided. When the span of the culvert is long and normal contraction joint is necessitated between these expansion joint the same shall be provided.

3.1.12.30 **Surfacetexture**

Tining : After final floating and finishing of the slab and before application of the liquid curing membrane, the surface of concrete slabs shall be textured either in the transverse direction (i.e., at right angles to the longitudinal axis of the road) or in longitudinal direction (i.e., parallel to the centreline of the roadway). The texturing shall be done by tining the finished concrete surface by using rectangular steel tines. A beam or a bridge mounted with steel tines shall be equipped and operated with automatic sensing and control devices from main paver or auxiliary unit. The tining unit shall have facility for adjustment of the download pressure on the tines as necessary to produce the desired finish. The tining rakes shall be cleaned often to remove snots of slurry. The tines will be inspected daily and all the damaged and bent tines shall be replaced before commencing texturing. Tined grooves shall be 3 mm wide and 3 to 4 mm deep. Before commencing texturing, the bleeding water, if any, shall be removed and texturing shall be done on a firm surface. Normally, transverse tining will be preferred.

Transversetining:

When the texturing is specified in transverse direction, a beam of at least 3 m length mounted with tines shall be moved in transverse direction to produce the texture. The grooves produced shall be at random spacing of grooves but uniform inwidthand depth. The spacing shall conform to a pattern shown below:

Randomspacinginmm

10 14 16 11 10 13 15 16 11 10 21 13 10

The above pattern shall be repeated. Texturing shall be done at the right time such that the grooves after forming shall not close and they shall not get roughened. Swerving of groove patterns will not be permitted. The completed textured surface shall be uniform in appearance.

Longitudinaltinning:

Longitudinal tinning shall be done, if specified in the Contract. The texturing bridge shall be wide enough to cover the entire width of the carriageway but within 75 mm from the pavement edge. The centre to centre spacing between the tins shall be 18 to 21 mm. The width of tine texture shall be 3 mm and depth shall be 3 to 4 mm.

BrushTexturing: Alternatively, on the instructions of the Engineer, the brushed texturing shall be applied. The brushed surface texture shall be applied evenly across the slab in one direction by the use of a wire brush not less than 450 mm wide but wider brushes normally of 3 m length are preferred. The brush shall be made of 32-gauge tape wires grouped together in tufts placed at 10 mm centres. The tufts shall contain an average of 14 wires and initially be 100 mm long. The brush shall have two rows of tufts. The rows shall be 20 mm apart and the tufts in one row shall be opposite the centre of the gap between tufts in the other row. The brush shall be replaced when the shortest tuft wears down to 90 mm long.

The texture depth shall be determined by the Sand Patch Test as

described in the Clause 602.12. This test shall be performed at least once for each day's paving and wherever the Engineer considers it necessary at times after construction as under:

Table600-3TextureDepth

TimeofTest	NumberMeasurements	Required(mm) Texture Depth	
			Tolerance
1. Between 24 hours and 7days after the construction, of the The slab is first used by vehicles. 2. Notlaterthan6weeksbeforethe Road is opened to traffic.	An average o measurements An average o measurements	1.001.00	±0.25 +0.25-0.35

After the application of the brushed texture, the surface of the slab shall have a uniform appearance.

Where the texture depth requirements are found to be deficient, the Contractor shall make good the texture across the full lane width over length directed by the Engineer, by retexturing the hardened concrete surface in an approved manner.

Curing

Immediately after the surface texturing, the surface and sides of the slab shall be cured by the application of approved resin-based aluminized reflective curing compound which hardens into an impervious film or membrane with the help of mechanical sprayer.

Curing compounds shall contain sufficient flake aluminium in finely divided dispersion to produce a complete coverage of the sprayed surface with a metallic finish. The compound shall become stable and impervious to evaporation of water from the surface of the concrete within 60 minutes of application and shall be of approved type. The curing compounds shall have a water retention efficiency index of 90 percent in accordance with BS Specification No. 7542 or ASTM-C-309-81, type-2.

The curing compound shall not react chemically with the concrete and the film or membrane shall not crack, peel or disintegrate within three weeks of application. Immediately prior to use, the curing compound shall be thoroughly agitated in its containers. The rate of spread shall be in accordance with the manufacturer's instructions checked during the construction of the trial length and subsequently whenever required by the Engineer. The mechanical sprayer shall incorporate an efficient mechanical device for continuous agitation and mixing of the compound

during spraying.To give continuous covering , the curing compound may be sprayed in two layers.

In addition to spraying of curing compound, the fresh concrete surface shall be protected for at least 3 hours by covering the finished concrete pavement with tents as described in Clause 602.7.2, during adverse weather conditions as directed by the Engineer. After three hours, the pavement shall be covered by moist hessian laid in two layers and the same shall then be kept damp for a minimum period of 14 days after which time the hessian may be removed. The hessian shall be kept continuously moist. All damaged/torn hessian shall be removed and replaced by new hessian on a regular basis.

The Contractor shall be liable at his cost to replace any concrete damaged as a result of incomplete curing or cracked on a line other than that of a joint as per procedure in IRC:SP:83.

3.1.12.31 **Trial Length**

The trial shall be constructed at least one month in advance of the proposed start of concrete paving work. At least one month prior to the construction of the trial length, the Contractor shall submit for the Engineer's approval a detailed method statement giving description of the proposed materials, plant, equipment and construction methods. All the major equipments like paving train, batching plant, tipping trucks etc., proposed in the construction are to be approved by the Engineer before their procurement. No trials of new materials, plant, equipment or construction methods, nor any development of them shall be permitted either during the construction of trial length or in any subsequent paving work, unless they form part of further approved trials. These trial lengths shall be constructed away from the carriageway but with at least a sub base layer below it.

The Contractor shall demonstrate the materials, plant, equipment and methods of construction that are proposed for concrete paving, by first constructing a trial length of slab, at least 100 m but not more than 300 m long for mechanized construction and at least 50 m long for hand guided methods. If the first trial is unsatisfactory, the Contractor shall have to demonstrate his capability to satisfactorily construct the pavement in subsequent trials.

The trial length shall be constructed in two parts over a period comprising at least part of two separate working days, with a minimum of 50 m constructed each day for mechanized construction and a minimum of 25 m on each day for hand guided construction.

The trial length shall be constructed at a paving rate (speed, around 1 m/hr similar) to that which is proposed for the main work.

Transverse joints and longitudinal joints of each type that are proposed for dowel-jointed unreinforced concrete slabs in the main work shall be constructed and assessed in the trial length. If in the trial length the construction of expansion joint and longitudinal joint is not demonstrated, the first 2 expansion joints and at least the first 150 m of longitudinal

construction joint for mechanized paving in the main work, shall be considered as the trial length for these joints.

The trial length shall comply with the Specifications in all respects, with the following additions and exceptions:

3.1.12.32 **Surface levels and regularity**

a) In checking for compliance with Clause 902.3 the levels shall be taken at intervals at the locations specified in this Clause along any line or lines parallel to the longitudinal centre line of the trial length.

b) The maximum number of permitted irregularities of pavement surface shall comply with the requirements of Clause 902.4. shorter trial lengths shall be assessed pro-rata based on values for a 300 m length.

Joints

c) Alignment of dowel bars shall be inspected as described in Clause 602.10.7 in any two consecutive transverse joints. If the position or alignment of the dowel bars at one of these joints does not comply with Clause 602.6.5, if that joint remains the only one that does not comply after the next 3 consecutive joints of the same type have been inspected, then the method of placing dowels shall be deemed to be satisfactory. In order to check sufficient joints for dowel bar alignment without extending the trial length unduly, the Contractor may, by agreement with the Engineer, construct joints at shorter intervals than the normal spacing required in the Contract.

d) If there are deficiencies in the first expansion joint that is constructed as a trial, the next expansion joint shall be a trial joint. Should this also be deficient, further trial expansion joints shall be made as part of the trial length which shall not form part of the permanent works, unless agreed by the Engineer.

e) **Direction of Dowel bars/Tie bars:** The direction of dowel bars/tie bars at the curve portion shall be in such a way that these shall be radially in the direction of the radii and parallel to the top surface.

These shall also be perpendicular to the direction of transverse joint and longitudinal joint at the middle of the slab depth respectively. The direction of bonded portion of the dowel bars shall preferably be in approaching side of the traffic and unbonded portion shall be on the side where traffic is leaving the joint.

3.1.12.33 **Density**

In-situ density in trial length shall be assessed as described in Clause 903.5.2.2 from at least 3 cores drilled from each part of the trial length when the concrete is not less than 7 days old. Should any of the cores show honey-combing in the concrete, the trail length shall be rejected and the construction in the main carriageway shall not be permitted until further trials have shown that modification has been made which would result in adequate compaction.

3.1.12.34 **Position of tie bars**

Compliance with Clause 602.6.6 for the position and alignment of tie bars shall be checked by drilling additional cores from the slab unless they can be determined from cores taken for density.

Minimum of thirty (30) beams for flexural strength and thirty (30) cubes for compressive strength shall be prepared from the concrete delivered in front of the paving plant. Each pair of beams and cubes shall be from the same location/batch but different sets of beams and cubes shall be from different locations/batches. Compressive and flexural strength shall be tested after 28 days water curing in the laboratory.

At the age of 28 days, thirty (30) cores with diameter 150 mm shall be cut from the pavement slab when the thickness of PQC is more than 300 mm. In case the PQC thickness is less than 300 mm, the dia of core shall be 100 mm. The cores shall be suitably cut at both ends to provide a specimen of plain surface on both ends. The dia to height ratio of core shall be 1 to 2. (for cylindrical specimen of PQC of dia 150 mm, the variation in dia shall be + 0.5 mm, a tolerance on height shall be + 1 mm for a specimen of cylindrical height 300 mm or more). The test shall be conducted as per IS:516.

Concrete in the member represented by a core test shall be considered acceptable, if the average equivalent cube strength of the cores is equal to at least 85 percent of the cube strength (characteristic strength) of the grade of the concrete specified for the corresponding age (28 days) and no individual core has a strength less than 75 percent.

3.1.12.35 **Approval and acceptance**

Approval of the materials, plant, equipment and construction methods shall be given when the trial length complies with the Specifications. The Contractor shall not proceed with normal working until the trial length has been approved. If the Engineer does not notify the Contractor of any deficiencies in any trial length within 10 days after the completion of that trial length, the Contractor may assume that the trial length, and the materials, plant, equipment and construction methods adopted are acceptable after accepting the 28 days strength test cubes and cores intracted from trial length.

When approval has been given, the materials, plant, equipment and construction methods shall not thereafter be changed, except for normal adjustments and maintenance of plant, without the approval of the Engineer. Any changes in materials, plant, equipment, and construction methods shall entitle the Engineer to require the Contractor to lay a further trial length as described in this Clause to demonstrate that the changes will not adversely affect the permanent works.

Trial lengths which do not comply with the Specifications, with the exception of areas which are deficient only in surface texture and which can be remedied in accordance with Clause 602.9.8.6 shall be removed immediately upon notification of deficiencies by the Engineer and the Contractor shall construct a further trial length.

Inspection of dowel bars

Compliance with Clause. for the position and alignment of dowel bars at construction and expansion joints shall be checked by measurements relative to the side forms or guide wires.

When the slab has been constructed, the position and alignment of dowel bars and any filler board shall be measured after carefully exposing them in the plastic concrete across the whole width of the slab. When the joint is an expansion joint, the top of the filler board shall be exposed sufficiently in the plastic concrete to permit measurement of any lateral or vertical displacement of the board. During the course of normal working, these measurements shall be carried out in the pavement section at the end of day's work by extending slab length by 2 m. After sawing the transverse joint groove, the extended 2 m slab shall be removed carefully soon after concrete has set to expose dowels over half the length. These dowels can be tested for tolerances.

If the position and alignment of the bars in a single joint in the slab is unsatisfactory then the next two joints shall be inspected. If only one joint of the three is defective, the rate of checking shall be increased to one joint per day until the Engineer is satisfied that compliance is being achieved. In the event of non- compliance in two or more successive joints, the Contractor shall revert to the construction of fresh trial lengths and make any necessary alteration to concrete mix, paving plant or methods until the dowel bar position and alignment are satisfactory.

After the dowel bars have been examined, the remainder of the concrete shall be removed over a width of 500 mm on each side of the line of the joint and reinstated to the satisfaction of the Engineer. The dowels shall be inserted on both sides of the 1 m wide slab by drilling holes and grouting with epoxy mortar. Plastic sheath as per Clause shall be provided on dowels on one of the joints. The joint groove shall be widened and sealed as per Clause.

3.1.12.36 **Preparation and Sealing of Joint**

General

All transverse joints in surface slabs shall be sealed using sealants described in Clause 602.2.8 and as for IRC:57.

Preparation of joint grooves for sealing

Joint grooves usually are constructed in first instance to provide the minimum width specified in the drawings when saw cut joints are adopted. They shall be widened subsequently by sawing before sealing. Depth/width gauges shall be used to control the dimension of the groove. Grooves are constructed in first instance just to provide a minimum width (3-5 mm) to facilitate development of cracks at such locations.

Subsequently before sealing, grooves are widened by sawing as per the dimensions in the drawing. Dimension of the grooves shall be controlled by depth/width gauge.

If rough arises develop when grooves are made, they shall be ground to provide a chamfer approximately 5 mm wide. If the groove is at an angle upto 10o from the perpendicular to the surface, the overhanging edge of the groove shall be sawn or ground perpendicular. If spalling occurs or the angle of the former is greater than 10 degree, the joint sealing groove shall be sawn wider and perpendicular to the surface to encompass the defects upto a maximum width, including any chamfer, of 20 mm for transverse joints and 10 mm for longitudinal joints. If the spalling cannot be so eliminated then the arises shall be repaired by an approved thin bonded arises repair using Cementitious.

All grooves shall be cleaned of any dirt or loose material by air blasting with filtered, oil-free compressed air. The Engineer shall instruct cleaning by pressurized water jets. Depending upon the requirement of the sealant manufacturer, the sides of the grooves shall be sand blasted to increase the bondage between sealant and concrete.

The groove shall be cleaned and dried at the time of priming and sealing.

Before sealing the temporary seal provided for blocking, the ingress of dirt, soil etc., shallbe removed. A highly compressible heat resistant paper-backed de-bonding strip as per drawing shall be inserted in the groove to serve the purpose of breaking the bond between sealant and the bottom of the groove and to plug the joint groove so that the sealant may not leak through the cracks. The width of de-bonding grip shall be more than the joint groove width so that it is held tightly in the groove. In the case of longitudinal joints, heat resistant tapes may be inserted to block the leakage through bottom of the joint. When hot poured sealant is used. When cold poured sealant is used a de-bonding tape of 1.0-2.0 mm thickness and 6 to 8 mm width shall be inserted to plug the groove so that the sealant does not enter in the initially cut groove.

Sealing with sealants

When sealants are applied, an appropriate primer shall also be used if recommended by the manufacturer and it shall be applied in accordance with his instructions. The sealant shall be applied within the minimum and maximum drying times of the primer recommended by the manufacturer. Priming and sealing with applied sealants shall not be carried out when the naturally occurring temperature in the joint groove to be sealed, is below 7°C.

If hot applied sealant is used (MAF more than 10 percent) it shall be heated and applied from a thermostatically controlled, indirectly heated preferably with oil jacketed melter and pourer having recirculation pump and extruder. For large road projects, sealant shall be applied with extruder having flexible hose and nozzle. The sealant shall not be heated to a temperature higher than the safe heating temperature and not for a period longer than the safe heating period, as specified by the manufacturer. The dispenser shall be cleaned out at the end of each day in accordance with the manufacturer’s recommendations and reheated material shall not be used.

Cold applied sealants with chemical formulation like polysulphide/ polyurethane/silicon as per IRC:57 shall be used when requirement of MAF is 25 percent or more. These shall be mixed and applied within the time limit specified by the manufacturer. If primers are recommended they shall be applied neatly with an appropriate brush.

The sealants applied at contraction phase of the slabs would result in bulging of the sealant over and above the slab. Therefore, the Contractor in consultation with the Engineer, shall establish the right temperature and time for applying the sealant. Thermometer shall be hung on a pole at the site for facilitating control during the sealing operation.

Sealan tshall be applied, slightly to a lower level than the slab with a tolerance of 3 ± 1 mm.

During sealing operation, it shall be seen that no air bubbles are introduced in the sealant either by vapours or by the sealing process. The sealant after pouring, shall be allowed to cured for 7 days or for a period as per instructions of manufacturers.

A unit of testing shall be 75 m per lane. If the length of construction is less than 75m it shall be taken as one unit.

3.1.12.37 **TestProcedure**

In each 75 m section, along the diagonal line, 10 points shall be selected for making checks of depth, width and spacing of tine grooves. The surface where tests are to be conducted shall be cleared carefully with a wire brush or a steel straight edge or using a corborundum to remove any upward projection of concrete. When the base plate of the gauge is in contact with the concrete surface, the gauge shall be pressed to the bottom of groove shall also be measured and recorded at this location. At the same location, the spacing of tines shall be measured to verify whether the pattern recommended in Clause 602.9.9.2 is complied or not.

Calculation

The average of depth and width at 10 locations shall be calculated and recorded to the nearest 1mm. The spacing of spectrum measured at 10 locations shall be recorded separately.

The average depth shall be within 3 to 4 mm. When the depth is less than 2.5mm and in excess of 4.5 mm, the Contractor shall stop concreting till he corrects his tine brush or replaces it. The sensors associated with work shall be again calibrated to achieve the required texture. The textured groove less than 2.5 mm shall be re-grooved using concrete saw at the cost of Contractor variation in texture width in the range of 3+1 mm and 3 - 0.5 mm will be acceptable. Variation of width in excess of this range, the contractor shall stop his work to correct his brush and technique. When the spacing of spectrum is not satisfactory, the contractor shall replace the entire brush.

3.1.12.38 **Opening to Traffic**

No vehicular traffic shall be allowed to ply on the finished surface of a concrete pavement within a period of 28 days of its construction and until the joints are permanently sealed. The road may be opened to regular traffic after completion of the curing period of 28 days and after sealing of joints is completed including the construction of shoulder, with the written permission of the Engineer.

3.1.12.39 **Pavement thickness**

All precautions and care shall be taken to construct pavements having uniform thickness as shown on the plans.

A day's work is considered as a 'lot' for calculating the average thickness of the slab. Average thickness of the slab shall be within tolerance limits prescribed in Table 900-1. No extra payment shall be made for the thickness more than the thickness prescribed in the drawing.

3.1.13 Structural Steel

3.1.13.1 **Extent and Intent**

The contractor shall furnish all materials, labour operation, equipment, tools and plant and incidentals necessary and required for the completion of all metal work in connection items of metal work as called for in the drawings. The drawings and specifications cover the major requirements only. The supplying of additional fastenings, accessory features and other items not mentioned specifically herein but which are necessary to make a complete installation shall be a part of the contract.

Works Include anchorages in cast-in-situ concrete.

3.1.13.2 **Related Work**

i. Grouting base plates and bearing plates
ii. Metal fabricators
iii. Roofing sheets

3.1.13.3 **Applicable Standards**

IS-226-1975 - Structural Steel (standard quality) (fifth revision)

IS-456-1978 - Code of practice for plain and reinforced concrete (third revision)

IS-696-1972 - Code of practice for general engineering drawings (second revision)

IS-786-1967	-	(Supplement) SI supplement to Indian Standard conversion factors and conversion tables (first revision)
IS-812-1957	-	Glossary of terms relating to welding and cutting of Metals
IS-813-1961	-	Scheme of symbols for welding
IS-814	-	Covered electrodes for metal arc welding of structural steels: 814 (Part 1)-1974 Part 1 for welding products other than sheets (fourth revision)
IS-816-1969	-	Code of practice for use of metal arc welding for general construction in mild steel (first revision)
IS-817-1966	-	Code of practice for training and testing of metal arc welders (revised)
IS-819-1957	-	Code of practice for resistance spot welding for light assemblies In mild steel
IS-875-1964	-	Code of practice for structural safety of buildings: Loading standards (revised)
IS-919-1963	-	Recommendations for limits and fits for engineering (revised)
IS-961-1975	-	Structural steel (high tensile) (second revision)
IS-962-1967	-	Code of practice for architectural and building drawings (first revision)
IS-1024-1979	-	Code of practice for use of welding in bridges and structures subject to dynamic loading (first revision)
IS-1030-1982	-	Carbon steel castings for general engineering purposes (second revision)
IS-1148-1973	-	Hot-rolled steel rivet bars (up to 40 mm diameter) for structural purposes (second revision)
IS-1149-1982	-	High tensile steel rivet bars for structural purposes
IS-1261-1959	-	Code of practice for seam welding in mild steel
IS-1278-1972	-	Filler rods and wires for gas welding (second revision)
IS-1323-1962	-	Code of practice for oxy- acetylene welding for structural work in mild steel (revised)
IS-1363-1967	-	Black hexagon bolts, nuts and lock nuts (diameter 6 to 39 mm) and black hexagon screws (diameter 6 to 24 mm) (first revision)
IS-1364-1967	-	Precision and semi-precision hexagon bolts, screws, nuts and lock nuts (diameter range 6 to 39 mm) (first revision)
IS-1367-1967	-	Technical supply conditions for threaded fasteners (first revision)
IS-1393-1961	-	Code of practice for training and testing of oxy-acetylene welders
IS-1395-1982	-	Molybdenum and chromium molybdenum vanadium low alloy steel electrodes for metal arc welding (second revision)

IS-1477	-	Code of practice for painting of ferrous metals in buildings: 1477 (Part 1)-1971 Part 1 Pretreatment (first revision)(Part 2)-1971 Part 2 Painting
IS-1929-1961	-	Rivets for general purposes (12 to 48 mm diameter)
IS-1977-1975	-	Structural steel (ordinary quality) (second revision)
IS-2062-1984	-	Weld able structural steel (third revision)
IS-2155-1962	-	Rivets for general purposes (below 12 mm diameter)
IS-3613-1974	-	Acceptance tests for wire-flux combinations for submerged-arc welding of structural steels (first revision)
IS-3757-1972	-	High-tensile friction grip bolts (first revision)
IS-4000-1967	-	Code of practice for assembly of structural joints using high tensile friction grip fasteners
IS-5369-1975	-	General requirements for plain washers and lock washers (first revision)
IS-5370-1969	-	Plain washers with outside diameter 3 x inside diameter
IS-6419-1971	-	Welding rods and bare electrodes for gas shielded arc welding of structural steel
IS-6623-1972	-	High tensile friction grip nuts
IS-6649-1972	-	High tensile friction grip washers
IS-7205-1974	-	Safety code for erection of structural steel work
IS-7215-1974	-	Tolerances for fabrication of steel structures
IS-7280-1974	-	Bare wire electrodes for submerged arc welding of structural steels
IS-8500-1977	-	Weld able structural steel (medium and high strength qualities)

3.1.13.4 **Fabrication**

a. Fabricate structural steel members in accordance with IS Specifications 800 Section V and approved shop drawings.
b. Defective material used shall be replaced by the Contractor.
c. Fabricated items delivered at site shall be suitably protected from any damages.

3.1.13.5 **Execution**

a. Erect structural steel in accordance with IS Specifications.
b. Make provision for erection loads and for sufficient temporary bracing to maintain the structure in proper plumb and in true alignment until completion of erection and installation of permanent bracing.
c. Do not field cut or alter structural members without approval of Project Manager.
d. After erection, prime welds, abrasions and surfaces not shop primed, except surfaces to be in contact with concrete.

e. Members shall be cut mechanically by saw or shear or by oxy acetylene flame and not by electric metal arc.
f. Cut edges shall be ground as per IS 823.
g. Cutting tolerances shall be
   - Members connected at bolt ends: + or - 1 mm.
   - Other members: + or - 3 mm.
h. All bolt holes shall be drilled and to the sizes specified in drawings.
   - Tolerance for spacing between two holes: + or - 1 mm.
   - Tolerance between two perpendiculars of any oval hole: + or - 1 mm.
   - Bolt holes for field joints shall be drilled in the shop to the required diameters and tested.
i. Drilling holes for standard sizes if varies can be reamed to next higher sizes. The tolerance for hole reaming shall not exceed 15% of the total number of holes for one joint.

3.1.13.6 **Preparation of members for welding**

a. Proper jigs and fixtures shall be used to ensure correct positioning of structural members during assembly.
b. Sharp edges, rusting of cutting edges, notches, irregularities, and fissures due to faulty cutting shall be chipped and ground.
c. Edge preparation for welding shall be done properly taking care of cleaning, providing dry surface, removing grease, dust or dirt, foreign matter, etc.
d. Finished dimensions of structure shall be ensured after taking into account the shrinkage and distortions during welding.

3.1.13.7 **Welding**

Personnel:

a. Welders shall be fully trained, experienced and certified by the recognised welding institutes.
b. Welders' qualification tests shall be as per IS 823 and approved by Project Manager.

Execution:

a. Welding shall be done in accordance with IS 823.
b. Welded parts shall be marked with welders' identification.
c. Protect the welded parts, electrode wires against wind and rain.
d. Discontinued seams shall be melted before resuming welding operation.
e. Welding seams shall be cooled slowly and not by any other quick methods.

f. Before welding a second layer over the existing layer of weld, the layer shall be cleaned metal bright by light chipping and wire brushing.
g. Execution shall proceed in strict compliance with Section 2/ 7 Safety Procedures.

Approval:

a. Welded parts shall not have any deformations.
b. Welded joints should compensate for contractions due to welding.
c. Defective welds must be rectified.
d. Weld seams shall correspond to design shapes and dimensions.
e. Weld seams shall not have cracks, fusion, under cuts, rough surfaces, burns, blowholes, and incomplete penetration.
f. Approval of finished elements, inspections and tests shall be as per Annexure

Bolting

3.1.13.8 **Material**

a. Bolts, nuts shall be in accordance with IS 1367 and tested as per IS 1608.
b. Washers shall be as per IS 2016.

3.1.13.9 **Pre Assembly**

Steel structures having same type of welding the shop test pre assembly shall be performed at least one member out of ten members.

3.1.13.10 **Inspection**

Contractor to provide facilities for Project Manager to inspect the steel assembly, welding, bolting, painting etc. at any time during fabrication of members.

Project Manager shall have the access to the fabrication shop at all times for satisfying himself regarding the fabrication of steel items to the drawings and specifications.

Shop approval by the Consultants / Project Manager is only mandatory.

Contractor to bear all the expenses for testing required by the Consultants / Project Manager for satisfying regarding the quality of workmanship.

Contractor to furnish necessary tools, gauges, instruments, technical and non-technical personnel for shop tests at his own cost.

3.1.13.11 **Approved Fabricators**

All metal work fabricated shall be approved by the Structural Consultant / Project Manager. The entire work shall be carried out by workmen skilled in this kind of work in a shop fully equipped to carry out all phases of fabrication in accordance with the best-accepted trade practices.

3.1.13.12 **Painting**

Preparation:

a. Surface to receive primer coat shall be sand blasted / wire brushed, free of dust, oil, rust, etc.
b. Surfaces not accessible to painting shall be filled with approved type of oil and putty.
c. Surface shall be completely dry.
d. Surfaces where water or aggressive agents may collect during transportation, storage, erection and operation shall be filled with putty and provided with drainage holes.
e. Structural steel members are inspected and approved.
f. Welds are approved.
g. After satisfying the above criteria the surfaces are to be provided with one coat of red oxide / zinc chromate primer to the satisfaction of Project Manager before the material is dispatched for erection.

Do not prime the following areas:

a. Surfaces to receive weld at site.
b. Surfaces bearing markings.
c. Surfaces as indicated in drawings.
d. Planned surfaces shall receive a coat of hot oil or any approved resistant lubricant only.
e. To coat the surfaces with hot oil to holes for links.
f. To give a coat of cement wash for any members either embedded or in contact with concrete.
g. To give a bituminous coat for members in contact with ground, gravel, brickwork and moisture.
h. Contractor to give a further coat of red oxide paint after erection and placing in position of the assembly if called for by the Project Manager.

3.1.13.13 **Packing, Transportation, Delivery:**

a. Structural steel members shall be marked and approved in shop before packing and loading for transportation.
b. Adequate packing must be done for all the steel members to protect them against warping during loading and unloading.
c. Suitable lifting devises to be used for loading and unloading.
d. Additional steel bracing to be provided for all slender projecting members to prevent any warping during transportation loading and unloading.
e. Loading and transportation shall be done as per the transportation rules.
f. To provide additional splice joints where required in consultation with Consultants / Project Manager in case the members to be transported are beyond the limitations of transporting system.

g. To secure all small parts including gusset plates fish plates by securing them with wire to their respective parts.
h. To crate all bolts, nuts and washers.
i. All structural parts to be delivered in the order required for construction and as per instructions of Project Manager and shall accompany the following documents.

3.1.13.14 **Storage and Preparation of Members Prior to Erection**

a. Place for storage of steel member shall be prepared in advance and got approved by the Project Manager.
b. To provide concrete platform at the site for preliminary erection work.
c. To verify the quality of material obtained at site and for workmanship to the specifications and drawings.
d. To verify whether the parts obtained at site is free from defects due to loading, unloading transportation.
e. To avoid warping of members during unloading by taking sufficient precautionary measures.
f. To store the members as per the symbol and markings and in order of erection.
g. To place the steel members at least 150mm above the platform on wooden or steel locks for protection against direct contact with ground and to permit drainage of water.
h. To equip for rectification of members like straightening at site and to provide sufficient space for the same.
i. To see that the parts are clean before erection.

3.1.13.15 **Final Acceptance and Handing Over the Structure**

a. Contractor to submit As-built shop drawings for the approval of the Structural Consultant / Project Manager, as per the stipulation given in Conditions of Contract.

b. Documents to be submitted for final acceptance are as follows:

1. Shop acceptance drawings

2. Quality certificate for structural members, plates, flats, bolts.

3. Quality certificate for material used for fabrication including electrodes, welding wire, bolts, nuts, washers, etc.,

4. List of welders who welded the structures and their certificates for having undergone a welding course.

5. Acceptance and intermediate control procedure adopted during the process of fabrication, assembly, transportation, delivery and erection or structure.

3.1.13.16 **Grouting**

a. To level, align and plumb the structural steel work and the base of stanchions by providing steel shim plates.

b. To align anchor bolts in foundation to the required level, location and orientation by using templates.

c. To clean the underside of base plates, pockets to receive grout by using compressed air.

d. To use cement mortar 1:2, 1 of cement and 2 of sand, non-shrink grout under base plates.

e. To use grade M 30 concrete to fill up the grout pockets left for fixing anchor bolts.

f. To pour the grout under a sufficient head and tam until the voids are thoroughly filled and the grout overflows.

3.1.13.17 **Tolerances**

a. Steel work for line and level ± 3mm

b. For structural steel for plumb 3.5mm for 10M and not more than 7mm for 30M

c. To follow any tolerance criteria provided on the drawings.

d. To provide tolerances for all structural steel members as per IS code other than what is mentioned in a, b and c.

ANNEXURE - A

Inspection of test	**Coverage**	**Procedure**	**Evaluation findings & remedy of Defect**
Inspection of weld seam	All welds	Naked Eye or Lens	All faulty welds shall be rectified
Checking of Sizes	At least one for	Ordinary measuring	Should faulty weld be found all welds shall be

	each Weld	instruments (rule, templates)	checked & all defects shall be rectified.
Mechanical tests for welding procedure Performance & electrodes		As per IS: 823	

ANNEXURE - B

INADMISSIBLE WELD DEFECTS AND TOLERANCE ALLOWED FOR WELDS

Defects	**Detailing of sketching of defect**	**Allowed tolerances & remedy of defects**	**Cause of defects**	**Mode of finding defects**
Unsatisfactory appearance	Uneven width rugged seam	At discretion cut weld & reweld	Uneven welding progress, voltage fluctuations, varying arc length, negligence inexperienced welded	External (visual inspection
Unsatisfactory shape	Shallow or jutting welds	No variance from design shape shall be allowed	Negligence	Visual inspection template checking
Incomplete weld		Not allowed fill in weld		Template checking
Molten metal flow		Not allowed fill in weld wrong	Excessive melting, ions handling of electrodes	Visual inspection
Pits	Not allowed cut & reweld		Wrong welding technique	Visual inspection
Surface cracks		Not allowed cut & reweld	Grerat stresses, sudden cooling, wrong type of electrodes	Visual inspection
Incorrect sectional dimensions A) Depth weld		B1 = ±2mm B2 = ±2mm B = ±1mm C = ±1mm Chisel & grid	Negligence	Template checking
Insufficient	For weld		Negligence	Rule

	lengths 11+5mm, for 12+10mm for shorter seams cur & reweld or complete to length			checking
Defects	**Detailing of sketching of defect**	**Allowed tolerances & remedy of defects**	**Cause of defects**	**Mode of finding defects**
Back cuts	If 0.5mm for 10mm & C1mm for 10mm replace relevant members		Burnt material, excessive melting	Visual inspection
Surface porosities	Max 5% of seam area cut & re-weld		Frequent interruptions or welding electrodes inadequately covered	Visual inspection

3.1.14 Precast Concrete

3.1.14.1 **Precast Nominal Mix Concrete**

General

All precast concrete shall be cast over vibrating tables or by using form vibrators. The concrete mix shall conform in all respect to " Various Concretes" described in the appropriate paragraph under this section.

Exposed precast surfaces shall be finished as called for on the drawing or as directed by the Consultants / Project Manager. All surfaces coming in contact with in situ concrete shall be wire brushed and hosed down until the aggregate is free from cement slurry. Castellation shall be provided wherever called for. Leaving grouting holes, grooves, inserts, projections reinforcements, lifting hooks etc., to conform to the erection procedure. All edges and delicate projection likely to be damaged during erection shall be protected by means of wooden cover fillets, until placed in position.

3.1.14.2 **Precast Ducts, Drain, Trench, cover, Inspection chamberetc**

All precast elements shall be Factory casted & shall be transported to the site exactly of the size and pattern shown on the drawings and shall be made face up in the following manner. All units shall be integrally cast; steel formwork shall be used for making elements.

Provided in the formwork as shown in the drawings. Stiff plastic concrete M 50 shall be used with coarse aggregate 12mm and downsize.
Samples of each part shall be approved by the Project Manager before proceeding with the work.
The section shall apply also to prestressed precast controlled concrete work.
For all precast controlled concrete work a specially equipped site factory, with casting yard, pretensioning beds of individual moulds for vibrating plants, cement store, concrete laboratory erection equipment, etc., are to be provided. The contractor is deemed to have included in his rates all the above provisions needed for a workman like construction in precast controlled concrete.
All precast design mix concrete shall be weigh batched.

3.1.14.3 **Precast design and scope**

The Contractor shall be responsible for implementing the design intent while taking upthe Precast works, which essentially shall be including but not limited to furnishing materials, equipment, labour, maintaining quality requirements, coordinating all trades for Precast work etc. The Contractor shall also be responsible for construction means, methods, techniques, sequences, and construction procedures.
During shop drawing review, the Contractor shall notify the Precast Vendor when as-built conditions (dimensions) vary beyond tolerances on the drawings. In particular, the dimensional tolerances between interfacing materials, such as precast concrete and glazing etc., should be considered.
The Contractor shall be a party to direct communication between the Precast Vendor, Owner's representative,and the consultant(s).
Communication channels shall be established among the parties by the Client.
Typically, the Contractor is responsible for placing embedment's in cast-in-place concrete and coordinatingsteel attachments with the steel fabricator.
The responsibility for erection of precast concrete shall bedetermined by the CONTRACTOR The contract documents rarely require that the erection be part of the precast concretemanufacturer's work, be performed by the Precast Vendor workers, or be subcontracted tospecialized erection firms.
Fabrication and erection included into one contract is preferred by somePrecast Vendor because this improves coordination and reduces vulnerability to back charges. The CONTRACTORhowever, may choose to issue separate contracts for fabrication and erection. Erectors and PrecastVendor to coordinate for the development of efficient connections for project based on theirequipment and expertise.
Safely loading, transporting, unloading, and storing the members at the site shall be the sole responsibility of the CONTRACTOR

3.1.14.4 **Applicable Codes**

• The National Building Code of India Volume 1 - 2016

• 1893 - Part 1- 2016 - Criteria for Design of Earthquake Resistant structures
• IS13920- 2016 - Ductile Design and Detailing of Reinforced Concrete Buildings Subjected to
Seismic Forces- Code of Practice
• 1905 - 1995 - Code of Practice for Structural Use of Unreinforced Masonry
• IS456 - 2000 - Plain and reinforced concrete code of Practice
• IS800 - 2007 General Construction in Steel Code of Practice
• IS3414 -1968 - Code of Practice for Design and Installation of Joints in Buildings
• CED 39 (15280) WC- Draft Indian Standard Criteria for Earthquake Resistant Design of
Structures: Part

3.1.14.5 **Quality Assurance**

The Contractor / producer will have an approved quality assurance programme with minimum:

a) Maintain a materials control program in accordance with schedules outlined.

b) Compensate for free moisture in aggregates and for the effects of admixtures on concrete mixes.

c) Control all requisites for concrete mixes and determine their acceptability. Laboratory SOPs

d) Ensure stressing operations conform to Design requirements for precast/prestressed concrete.

e) Inspection of dimensions for positions of bulkheads, strand, reinforcement, inserts, voids, and other integral items.

f) Inspection by contractors & third-party inspector for the finished product for dimensional accuracy, strength and appearance.

g) Contractor to report deviation from allowable tolerance to the Third-party inspector &Client as well.

h) Provide the Materials and Testing with documentation of quality control, pre-pour inspection reports, post-pour inspection reports, concrete cover reports, daily production reports, shipping reports, and any other reports or documentation required by owner's representative and Third-party Inspector.

i) Placing the Third-party company or consulting & contractors stamp on members which meet all applicable requirements.

2. The third-party inspection agency will be approved by the Client for their ability to perform the above functions in accordance with the approved procedure. This examination will usually be written and oral.

3. Quality control personnel responsible for batching concrete and personnel responsible for sampling and testing fresh concrete & hardened concrete will be examined for their ability to perform these functions.

Contractor / Producers shall provide the following information well in advance of the fabrication of members:

1. Shop drawings approved by Structural Designer for precast concrete members, including calculations, and erection drawings.
2. A complete set of information bearing the original stamp from a representative of the Contractor & producer before any work may begin.
a. Project number & name.
b. Location at which members are to be fabricated.
c. Probable casting dates.
d. Sources of all materials to be incorporated into the members.
e. The earliest date prior to fabrication that the facilities may be inspected.

3.1.14.6 **Handling Precast Members**

Members shall not be lifted from the casting bed until the concrete has reached a compressive strength as specified by structural designer nor shall there be any evidence of damage to the unit. Units shall not be ransported or erected until they have reached the required design strength.

3.1.14.7 **Acceptance Inspection**

Dimensional Tolerances: Each member shall be checked for construction tolerances by the contractor.

Tolerances shall be vetted by Structural consultant. The limits of tolerances do not necessarily represent fully acceptable construction but are the limits at which construction may become unacceptable. The producer shall work at a level of quality that is well within the tolerance limits. The contractor shall document in writing the actual measurements and any required corrections on a post pour report. The post-pour shall be inspected by third party. These measurements will be made with a cover meter and may require selective storage of specific members. The producer shall document in writing the actual measurements and any out of tolerance measurement on a Report. The Report shall be submitted to the Owner's representative in advance and Testing Inspector and a copy shall remain on file at the producer's plant.

Cracks arise in members during the transportation shall be cause for rejection of the member.

3.1.14.8 **Surface Finishes**

All concrete members shall have an acceptable and uniform finish before they are shipped to the project.

3.1.14.9 **Identification of Members**

Immediately after the forms have been removed, the members shall be individually identified with an identification number and dated by the contractor. This is necessary to ensure that a record will be available of the exact location on the bed and date of placement of each member.

The storage of members at site shall be in the scope of contractor.

3.1.14.10 **Submittals**

Product Data: For each type of product indicated. Retain quality control records and certificates of compliance for years define in contract documents after completion of structure.

Method Statements: Prior to starting work, sequence of activities which will be followed shall be submitted by CONTRACTOR. The Contractor will ensure that all related activities are executed in accordance with the requirements & safety measures are implemented throughout the progress of work.

3.1.14.11 **Delivery, Storage and Handling**

a) Deliver all structural precast concrete members in such quantities and at such times to assure compliance with the agreed upon project schedule and setting sequence to ensure continuity of installation.
b) Handle and transport members in a manner to avoid excessive stresses that could cause cracking or other damage.
c) Store units with adequate dunnage and bracing, and protect units to prevent contact with soil, staining, and to control cracking, distortion, warping or other physical damage.
d) Unless otherwise specified or shown on Shop Drawings, store members with dunnage across full width of each bearing point.
e) Place stored members so identification marks are clearly visible, and units can be inspected at site also.
f) Place dunnage of even thickness between each member.

Lift and support members only at designated points.

3.1.14.12 **Documentation**

1. Maintain test results and test reports on all materials that are used in the work.
2. Maintain records of concrete production reports.
3. Maintain accurate records of all members cast and shipped.
4. Maintain records of cover readings.
5. Maintain records of pre-pour and post-pour inspection.
6. Maintain records any corrections made to casting beds.
7. Maintain certified calibration certificates of all stressing equipment, concrete testing, equipment, and concrete plant.
8. Maintain documentation certifying that all materials and products permanently incorporated into members meet the requirements.
9. Maintain records of test results of all control samples and independent assurance samples.
10. Maintain records of all daily concrete production reports, shipping reports, and materials certifications.

3.1.14.13 **Third party testing Agency Qualifications**

An independent NABL accredited testing agency of international level repute & accepted to Owner's representative to conduct the Inspection & / or testing.
Agency will report test results & inspection promptly orally and in writing to Contractor and Owners representative.
The cost & expenses to be borne by General Contractor.
Testing and inspecting, at Contractors' expense, will be performed to determine compliance.

3.1.14.14 **Samples**

The contractor shall submit to the Engineer samples of all materials for approval and no work shall commence before such samples are duly approved. Samples of precast concrete panels shall be supplied to the Engineer, and these samples will be retained as standards of materials and workmanship. The cost of the samples shall be borne by the contractor.

3.1.14.15 **Installation & Placing of Precast Elements**

The Elements shall be set in position true to plumb and level before the sealing the joints. It shall then be properly grouted with GP2 Grouting material and rechecked for levels. The Precast structure shall be laid on uniform surface with minimum 200 mm thick PCC (Recycled C&D material shall be used for PCC) and below that minimum 200 thick soling shall be done.

3.1.15 List of Approved Makes of Material

S. No.	Item Description		Make/Brand
1.	Cement (OPC/PPC)	:	ACC/Ultratech/JK
2.	Structural Sealant	:	Wacker / Dow Corning / GE / Supreme
3.	Reinforcement Steel	:	SAIL, TATA, RINL
4.	Structural Steel	:	SAIL / TATA / RINL / JSW
5.	M.S. Pipe, Tubes, Bar, Flats, Angle, Tee Sections	:	SAIL / TATA / APL / Apollo
6.	Concrete admixture	:	Fosroc / Sika / Chryso / Mapei/BASF
7.	Polyethylene backer rod	:	Supreme / Tikidan
8.	PVC water stops	:	Fixopan / Sintex / Tilidan
9.	Synthetic Enamel Paint	:	Berger / Nerolac / Asian
10.	PVC strips	:	Fixopan or approved equivalent
11.	Welding rod	:	ADVANI / ESAB/ L&T
12.	Ready mix Concrete	:	UltraTech / ACC/ Lafarge
13.	Pre-Cast concrete	:	Fuji Silvertech concrete pvt ltd, Fuji Infrastructure technology and Siddhi Vinayak precast pipe pvt ltd.
14.	Concrete Curing Compound	:	Fosroc / Sikka/ BSF/ CICO/ Pidilite
15.	Waterproof shuttering Ply	:	Green / Century / Archid / Century /Merino
16.	Core cutting,Concrete cutting	:	M/s HILTI / M/s HITACHI
17.	Rebaring chemicals and materials, Anchors	:	M/s FISCHER / M/s HILTI / M/sFOSROC
18	Precast Feeder Pillar foundation block & Street Light foundation blocks	:	Fuji Silvertech concrete pvt ltd., KK Manhole and Gratings Co. Pvt. Ltd.

Note: In the List of recommended above, out of make mentioned in the list, only 1st make shall be quoted for and used. However, if due to non-availability or any other technical reasons, the alternative make shall be used only after prior approval from client.

PART *C:* TENDER DRAWINGS

3.1.16 Tender Drawings:

The Tender Drawings given are quite extensively detailed, however there may be certain detail, which may require further detailing while actual execution or there may be certain detail which could have been inadvertently overlooked. Such details shall not constitute extra items. The drawings are guidelines for the Contractor when he works out his quotation. Any item of work, not indicated on the drawing but in line with the design and with the thinking shall be deemed to be a part of the contractual obligation and nothing extra shall be paid to the Contractor for the same.

3.1.16.1 List of Tender Drawings:

S No	Sheet no	Drawing Title	Rev No	Remarks
1	001	LAYOUT PLAN - ESPLANADE ROAD	R0	
2	002	LAYOUT PLAN OF MORE SARAI ROAD	R0	
3	003	PLAN AND SECTION OF ESPLANADE ROAD	R0	
4	004	PLAN AND SECTION OF MORE SARAI ROAD	R0	
5	005	TYPICAL DETAIL OF CABLE AND OFC DUCT (600MMX600MM)	R0	
6	006	TYPICAL DETAIL OF STORM WATER DRAINAGE DUCT (600MMX600MM)	R0	
7	007	TYPICAL DETAIL OF MULTI-UTILITY DUCT (600mmx900mm)	R0	
8	008	FOUNDATION DETAIL OF ELECTRIC POLE AND FEEDER PANEL	R0	

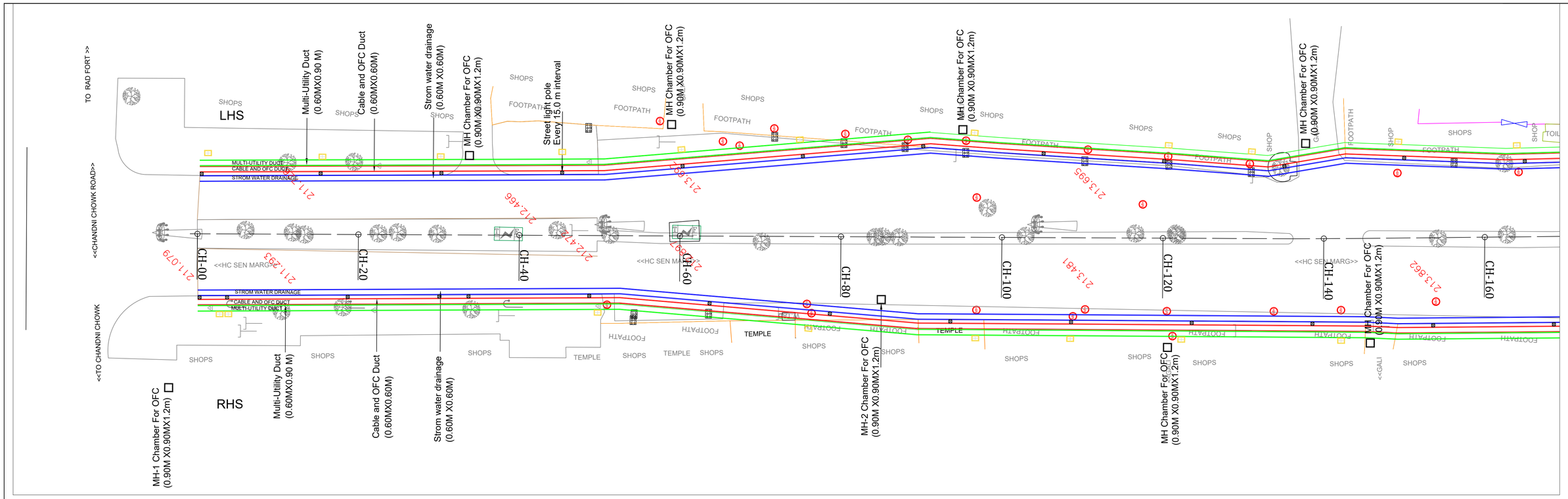

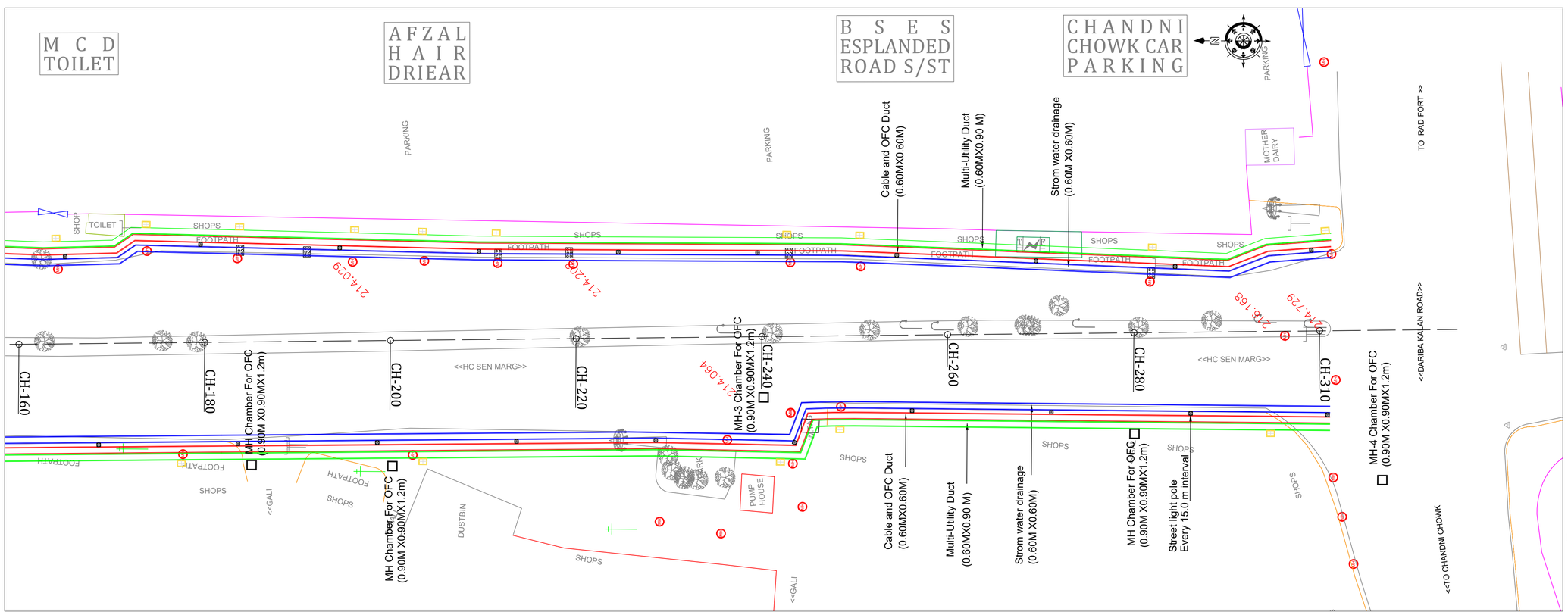

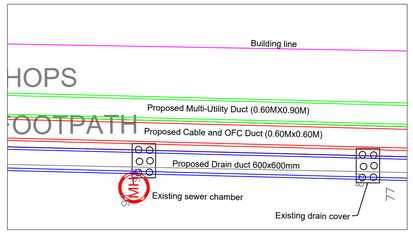

DETAILS OF EXISTING AND PROPOSED UTILITY

THIS DRAWING IS THE PROPERTY OF RUDRABHISHEK ENTERPRISES LTD. (REPL) AND SHALL NOT BE REPRODUCED OR USED WITHOUT THEIR PERMISSION. THE USER OF THESE DRAWINGS CONFIRMS THE ACCEPTANCE OF THE FOLLOWING CONDITIONS.

1) ANY DISCREPANCY BETWEEN THIS DRAWINGS AND DRAWINGS OF ARCHITECTS, MEP AND OTHER CONSULTANTS SHALL BE BROUGHT TO OUR NOTICE BEFORE CONSTRUCTION.
2) WORK SHALL NOT PROCEED WITHOUT APPROVAL OF DRAWINGS AND MATERIALS FROM THE ENGINEER–IN–CHARGE.
3) CONTRACTOR SHALL VERIFY ALL SITE CONDITIONS, LEVELS, AND DIMENSIONS BEFORE COMMENCEMENT OF WORK. ANY DISCREPANCY SHALL BE BROUGHT TO THE NOTICE OF THE ENGINEER.
4) ALL DIMENSIONS ARE IN METER (M) UNLESS OTHERWISE SPECIFIED. DO NOT SCALE THE DRAWING FOLLOW WRITTEN DIMENSIONS ONLY.
5) ALL WORKS SHALL BE EXECUTED AS PER APPROVED DRAWINGS, SPECIFICATIONS, AND INSTRUCTIONS OF THE ENGINEER–IN–CHARGE.
6) NUMBER OF CHAMBER (SEWER AND OFC) ARE INDICATIVE AND SAME WILL BE FINALIZED DURING DETAILED ENGINEERING.

NOTE:- LENGTH AND WIDTH SHALL BE VERIFIED BY CONTRACTOR

TENDER DRAWING

LEGEND:-

- MULTI-UTILITY DUCT (0.60 M X 0.90M)
- CABLE AND OFC DUCT (0.60 M X 0.60M)
- STROM WATER DRAINAGE (0.60 M X 0.60M)
- OFC CHAMBER (0.90M X0.90MX1.2M)
- STREET LIGHT
- EXISTING MAINHOLE
- EXISTING SWD COVER
- EXISTING FOOT PATH LINE
- EXISTING BUILDING LINE
- CONNECTING CHAMBER

NO.	DATE	REV.NO.	DESCRIPTION	APP.
1		R0	REVISIONS UPTO DATE AND ISSUED FOR TENDER	

DRAWING TITLE:-	LAYOUT PLAN - ESPLANADE ROAD		
CHAINAGE:-	SECTION LENGTH:-	TOTAL LENGTH:-	
SURVEY DATE:-	SUBMISSION DATE:-	SCALE:- 4:1	
DRAWING NO.:- 01	SUBMITTED BY:	SHEET NO.	SHEET SIZE A-1

CLIENT:- BSES — BSES YAMUNA POWER LIMITED

CONSULTANT :- RE•PL The Power of Knowledge — RUDRABHISHEK ENTERPRISES LTD. DESPECTO KNOWLEDGE CENTRE PLOT NO.12, OPP. AMITY UNIVERSITY GATE NO. 2 ROAD, SECTOR 126, NOIDA,

TOPOGRAPHY OF MORE SARAI ROAD FROM PE-TONE ELECTRONICS TO SHOP NO.- 2287

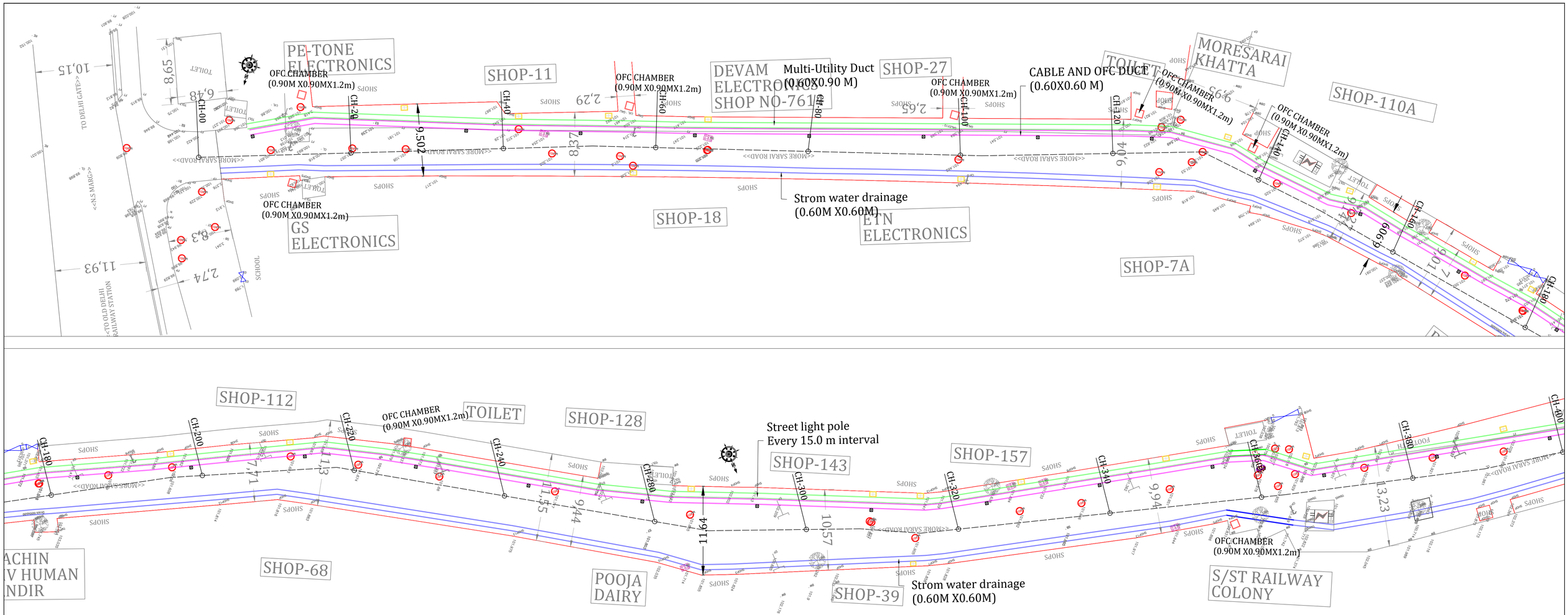

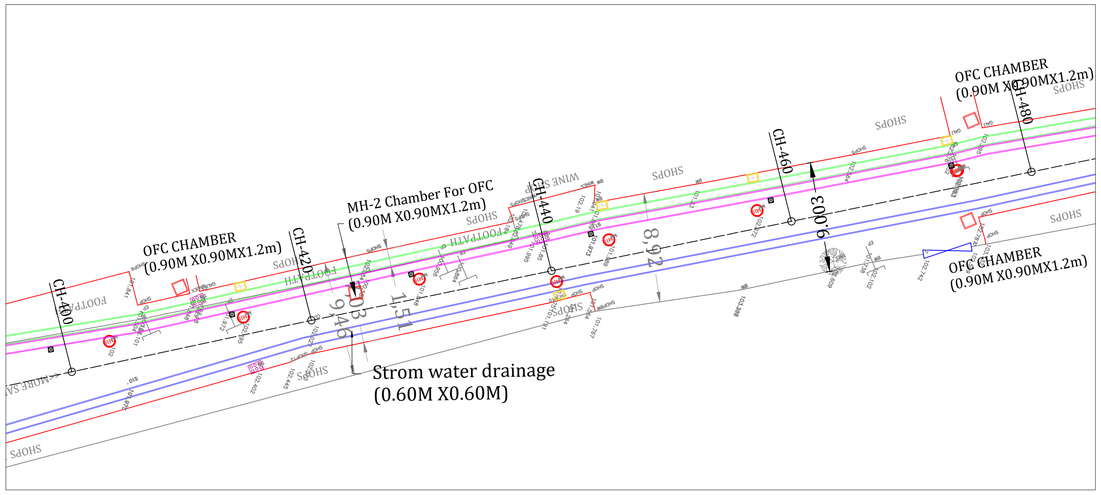

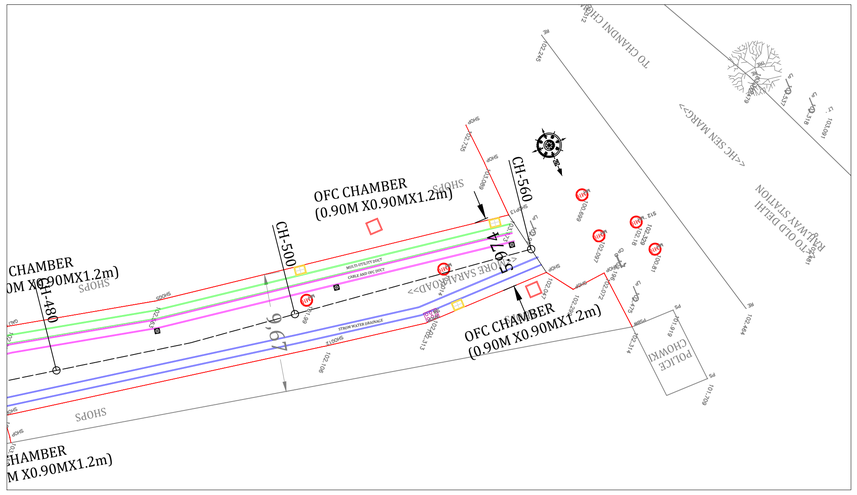

THIS DRAWING IS THE PROPERTY OF RUDRABHISHEK ENTERPRISES LTD. (REPL) AND SHALL NOT BE REPRODUCED OR USED WITHOUT THEIR PERMISSION. THE USER OF THESE DRAWINGS CONFIRMS THE ACCEPTANCE OF THE FOLLOWING CONDITIONS.

1) ANY DISCREPANCY BETWEEN THIS DRAWINGS AND DRAWINGS OF ARCHITECTS, MEP AND OTHER CONSULTANTS SHALL BE BROUGHT TO OUR NOTICE BEFORE CONSTRUCTION.
2) WORK SHALL NOT PROCEED WITHOUT APPROVAL OF DRAWINGS AND MATERIALS FROM THE ENGINEER-IN-CHARGE.
3) CONTRACTOR SHALL VERIFY ALL SITE CONDITIONS, LEVELS, AND DIMENSIONS BEFORE COMMENCEMENT OF WORK. ANY DISCREPANCY SHALL BE BROUGHT TO THE NOTICE OF THE ENGINEER.
4) ALL DIMENSIONS ARE IN METER (M) UNLESS OTHERWISE SPECIFIED. DO NOT SCALE THE DRAWING FOLLOW WRITTEN DIMENSIONS ONLY.
5) ALL WORKS SHALL BE EXECUTED AS PER APPROVED DRAWINGS, SPECIFICATIONS, AND INSTRUCTIONS OF THE ENGINEER-IN-CHARGE.
6) NUMBER OF CHAMBER (SEWER AND OFC) ARE INDICATIVE AND SAME WILL BE FINALIZED DURING DETAILED ENGINEERING.

NOTE:- LENGTH AND WIDTH SHALL BE VERIFIED BY CONTRACTOR

TENDER DRAWING

LEGEND:-

- MULTI-UTILITY DUCT (0.60 M X 0.90M)
- CABLE AND OFC DUCT (0.60 M X 0.60M)
- STROM WATER DRAINAGE (0.60 M X 0.60M)
- OFC CHAMBER (0.90M X0.90MX1.2M)
- STREET LIGHT
- EXISTING MAINHOLE
- EXISTING SWD COVER
- EXISTING FOOT PATH LINE
- EXISTING BUILDING LINE
- CONNECTING CHAMBER

NO.	DATE	REV.NO.	DESCRIPTION	APP.
1		R0	REVISIONS UPTO DATE AND ISSUED FOR TENDER	

DRAWING TITLE:-	LAYOUT PLAN OF MORE SARAI ROAD		
CHAINAGE:-	SECTION LENGTH:-	TOTAL LENGTH:-	
SURVEY DATE:-	SUBMISSION DATE:-	SCALE:- 4:1	
DRAWING NO.:- 02	SUBMITTED BY:	SHEET NO.	SHEET SIZE A-1

CLIENT:- BSES Yamuna Power Limited

CONSULTANT :- RE-PL The Power of Knowledge

RUDRABHISHEK ENTERPRISES LTD.
DESPECTO KNOWLEDGE CENTRE PLOT NO.12,
OPP. AMITY UNIVERSITY GATE NO. 2 ROAD,
SECTOR 126, NOIDA,

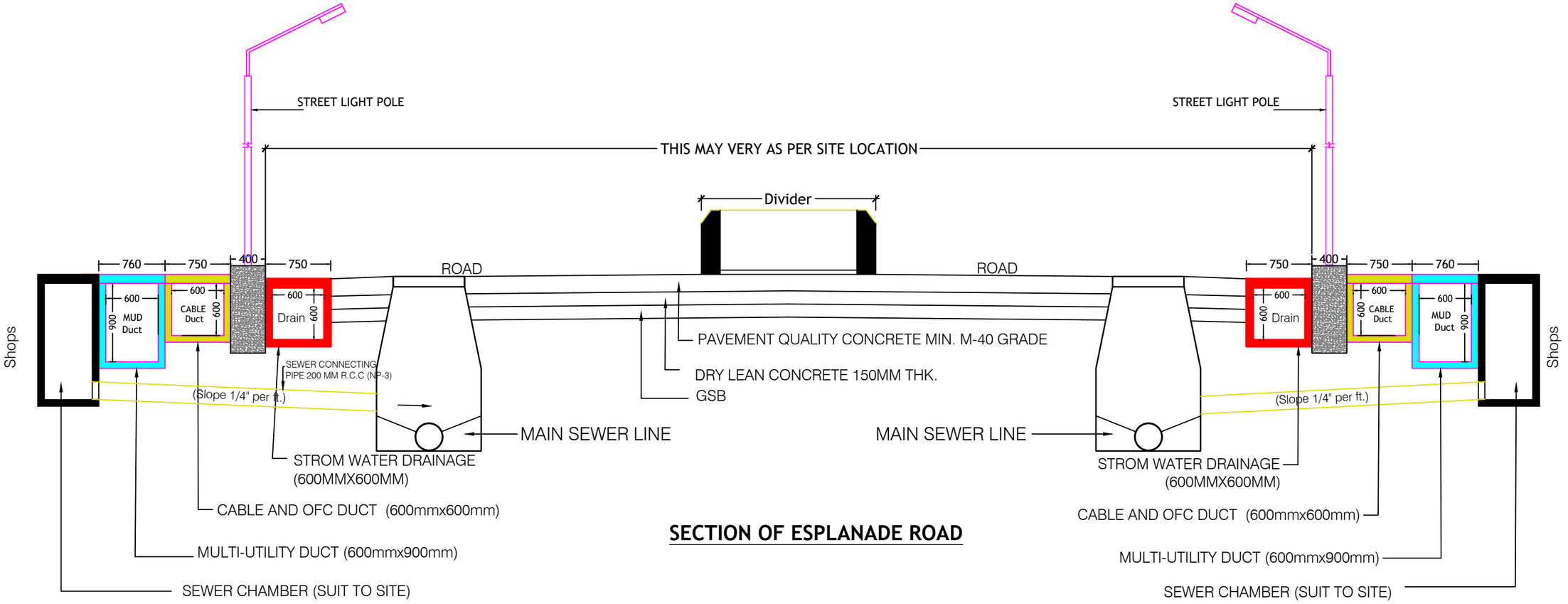

SECTION OF ESPLANADE ROAD

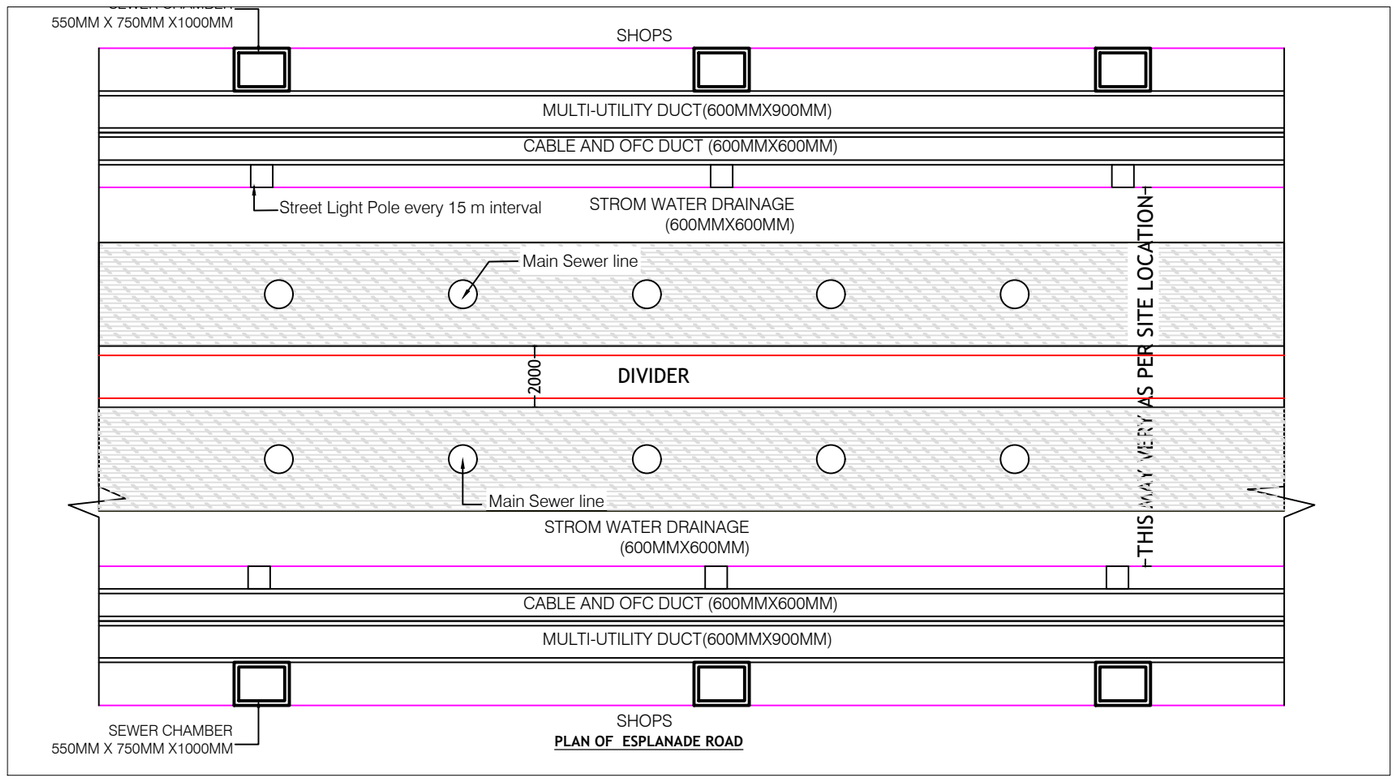

PLAN OF ESPLANADE ROAD

LEGEND :-

	MULTI-UTILITY DUCT (600MMX900MM)
	CABLE AND OFC DUCT (600MMX600MM)
	STROM WATER DRAINAGE (600MMX600MM)
	STREET LIGHT POLE

THIS DRAWING IS THE PROPERTY OF RUDRABHISHEK ENTERPRISES LTD. (REPL) AND SHALL NOT BE REPRODUCED OR USED WITHOUT THEIR PERMISSION. THE USER OF THESE DRAWINGS CONFIRMS THE ACCEPTANCE OF THE FOLLOWING CONDITIONS.

1) ANY DISCREPANCY BETWEEN THIS DRAWINGS AND DRAWINGS OF ARCHITECTS, MEP AND OTHER CONSULTANTS SHALL BE BROUGHT TO OUR NOTICE BEFORE CONSTRUCTION.
2) WORK SHALL NOT PROCEED WITHOUT APPROVAL OF DRAWINGS AND MATERIALS FROM THE ENGINEER-IN-CHARGE.
3) CONTRACTOR SHALL VERIFY ALL SITE CONDITIONS, LEVELS, AND DIMENSIONS BEFORE COMMENCEMENT OF WORK. ANY DISCREPANCY SHALL BE BROUGHT TO THE NOTICE OF THE ENGINEER.
4) ALL DIMENSIONS ARE IN MILLIMETERS (MM) UNLESS OTHERWISE SPECIFIED. DO NOT SCALE THE DRAWING FOLLOW WRITTEN DIMENSIONS ONLY.
5) ALL WORKS SHALL BE EXECUTED AS PER APPROVED DRAWINGS, SPECIFICATIONS, AND INSTRUCTIONS OF THE ENGINEER-IN-CHARGE.
6) GRADE OF CONCRETE SHALL BE M50 FOR PRECAST WORK AND P.C.C GRADE SHALL BE M15.
7) GRADE OF STEEL SHALL BE FE-500D.
8) BACK FILLING SOIL SHALL BE GOOD EARTH, COMPETED WELL TO 95% PROCTOR DENSITY.

NO.	DATE	REV.NO.	DESCRIPTION	APP.
1		R0	REVISIONS UPTO DATE AND ISSUED FOR TENDER	

CLIENT:-	BSES YAMUNA POWER LIMITED
CONSULTANT :-	RUDRABHISHEK ENTERPRISES LTD. DESPECTO KNOWLEDGE CENTRE PLOT NO.12, OPP. AMITY UNIVERSITY GATE NO. 2 ROAD, SECTOR 126, NOIDA,
DRAWING TITLE:-	PLAN AND SECTION OF ESPLANADE ROAD
	TENDER DRAWING

CHAINAGE:-	SECTION LENGTH:-	TOTAL LENGTH:-	
SURVEY DATE:-	SUBMISSION DATE:-	SCALE:- 1:40, 1:100	
DRAWING NO.:- 03	SUBMITTED BY:	SHEET NO.	SHEET SIZE A-3

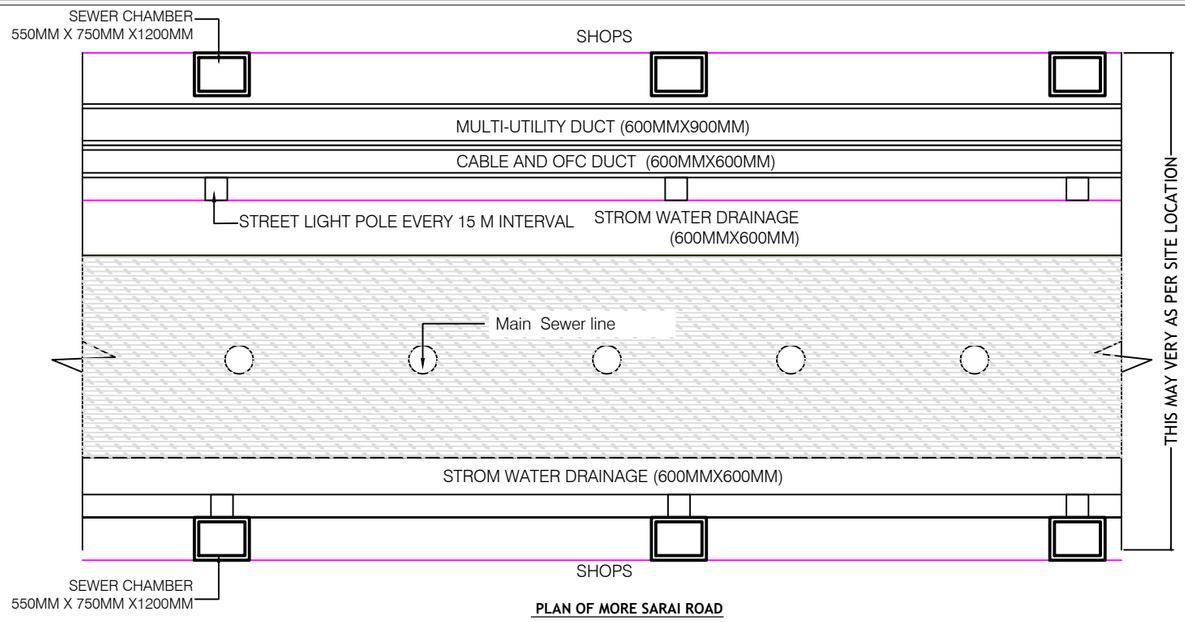

PLAN OF MORE SARAI ROAD

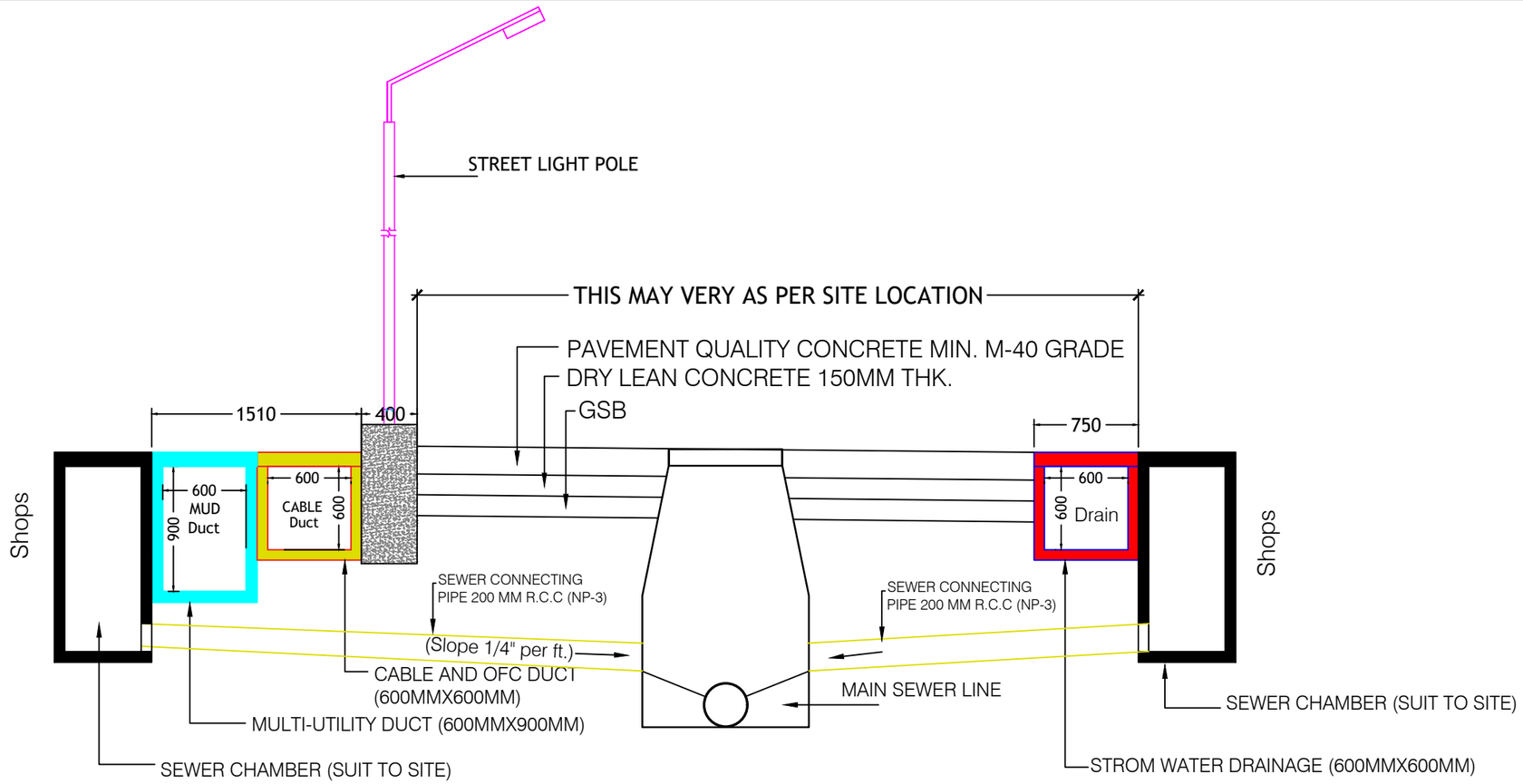

SECTION OF MORE SARAI ROAD

THIS DRAWING IS THE PROPERTY OF RUDRABHISHEK ENTERPRISES LTD. (REPL) AND SHALL NOT BE REPRODUCED OR USED WITHOUT THEIR PERMISSION. THE USER OF THESE DRAWINGS CONFIRMS THE ACCEPTANCE OF THE FOLLOWING CONDITIONS.

1) ANY DISCREPANCY BETWEEN THIS DRAWINGS AND DRAWINGS OF ARCHITECTS, MEP AND OTHER CONSULTANTS SHALL BE BROUGHT TO OUR NOTICE BEFORE CONSTRUCTION.
2) WORK SHALL NOT PROCEED WITHOUT APPROVAL OF DRAWINGS AND MATERIALS FROM THE ENGINEER-IN-CHARGE.
3) CONTRACTOR SHALL VERIFY ALL SITE CONDITIONS, LEVELS, AND DIMENSIONS BEFORE COMMENCEMENT OF WORK. ANY DISCREPANCY SHALL BE BROUGHT TO THE NOTICE OF THE ENGINEER.
4) ALL DIMENSIONS ARE IN MILLIMETERS (MM) UNLESS OTHERWISE SPECIFIED. DO NOT SCALE THE DRAWING FOLLOW WRITTEN DIMENSIONS ONLY.
5) ALL WORKS SHALL BE EXECUTED AS PER APPROVED DRAWINGS, SPECIFICATIONS, AND INSTRUCTIONS OF THE ENGINEER-IN-CHARGE.
6) GRADE OF CONCRETE SHALL BE M50 FOR PRECAST WORK AND P.C.C GRADE SHALL BE M15.
7) GRADE OF STEEL SHALL BE FE-500D.
8) BACK FILLING SOIL SHALL BE GOOD EARTH, COMPETED WELL TO 95% PROCTOR DENSITY.

LEGEND :-

- MULTI-UTILITY DUCT (600MMX900MM)
- CABLE AND OFC DUCT (600MMX600MM)
- STROM WATER DRAINAGE (600MMX600MM)
- STREET LIGHT POLE

NO.	DATE	REV.NO.	DESCRIPTION	APP.
1		R0	REVISIONS UPTO DATE AND ISSUED FOR TENDER	

CLIENT:-	BSES YAMUNA POWER LIMITED
CONSULTANT :-	RUDRABHISHEK ENTERPRISES LTD. DESPECTO KNOWLEDGE CENTRE PLOT NO.12, OPP. AMITY UNIVERSITY GATE NO. 2 ROAD, SECTOR 126, NOIDA,
DRAWING TITLE:-	PLAN AND SECTION OF MORE SARAI ROAD TENDER DRAWING

CHAINAGE:-	SECTION LENGTH:-	TOTAL LENGTH:-	
SURVEY DATE:-	SUBMISSION DATE:-	SCALE:- 1:40, 1:100	
DRAWING NO.:- 04	SUBMITTED BY:	SHEET NO.	SHEET SIZE A-3

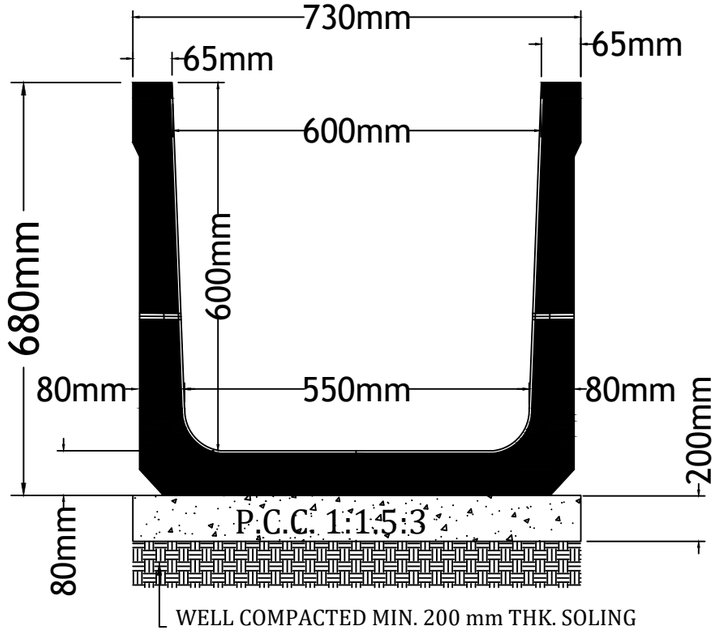

TYPICAL FOUNDATION DETAILS

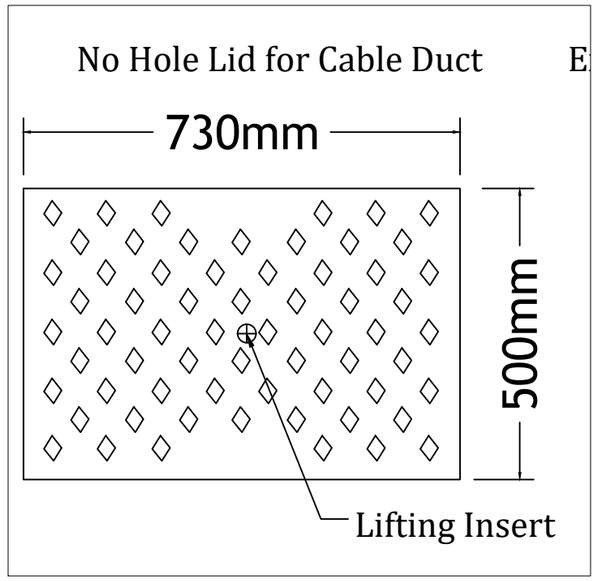

TYPICAL DETAIL OF CABLE AND OFC DUCT (600mmx600m)

THIS DRAWING IS THE PROPERTY OF RUDRABHISHEK ENTERPRISES LTD. (REPL) AND SHALL NOT BE REPRODUCED OR USED WITHOUT THEIR PERMISSION. THE USER OF THESE DRAWINGS CONFIRMS THE ACCEPTANCE OF THE FOLLOWING CONDITIONS.

1) ANY DISCREPANCY BETWEEN THIS DRAWINGS AND DRAWINGS OF ARCHITECTS, MEP AND OTHER CONSULTANTS SHALL BE BROUGHT TO OUR NOTICE BEFORE CONSTRUCTION.
2) WORK SHALL NOT PROCEED WITHOUT APPROVAL OF DRAWINGS AND MATERIALS FROM THE ENGINEER-IN-CHARGE.
3) CONTRACTOR SHALL VERIFY ALL SITE CONDITIONS, LEVELS, AND DIMENSIONS BEFORE COMMENCEMENT OF WORK. ANY DISCREPANCY SHALL BE BROUGHT TO THE NOTICE OF THE ENGINEER.
4) ALL DIMENSIONS ARE IN MILLIMETERS (MM) UNLESS OTHERWISE SPECIFIED. DO NOT SCALE THE DRAWING FOLLOW WRITTEN DIMENSIONS ONLY.
5) ALL WORKS SHALL BE EXECUTED AS PER APPROVED DRAWINGS, SPECIFICATIONS, AND INSTRUCTIONS OF THE ENGINEER-IN-CHARGE.
6) GRADE OF CONCRETE SHALL BE M50 FOR PRECAST WORK AND P.C.C GRADE SHALL BE M15.
7) GRADE OF STEEL SHALL BE FE-500D.
8) BACK FILLING SOIL SHALL BE GOOD EARTH, COMPETED WELL TO 95% PROCTOR DENSITY.

NO.	DATE	REV.NO.	DESCRIPTION	APP.
1		R0	UPTO DATE AND ISSUED FOR TENDER	

CLIENT:- BSES	BSES YAMUNA POWER LIMITED
CONSULTANT :- REPL	RUDRABHISHEK ENTERPRISES LTD. DESPECTO KNOWLEDGE CENTRE PLOT NO.12, OPP. AMITY UNIVERSITY GATE NO. 2 ROAD, SECTOR 126, NOIDA,
DRAWING TITLE:-	TYPICAL DETAIL OF CABLE AND OFC DUCT (600MMX600MM)
	TENDER DRAWING

CHAINAGE:-	SECTION LENGTH:-	TOTAL LENGTH:-	
SURVEY DATE:-	SUBMISSION DATE:-	SCALE:- N.T.S	
DRAWING NO.:- 05	SUBMITTED BY:	SHEET NO.	SHEET SIZE A-3

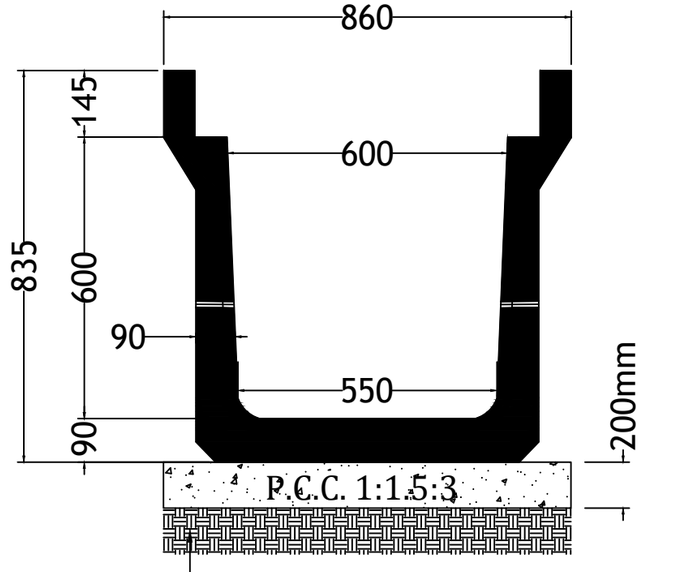

TYPICAL FOUNDATION DETAILS

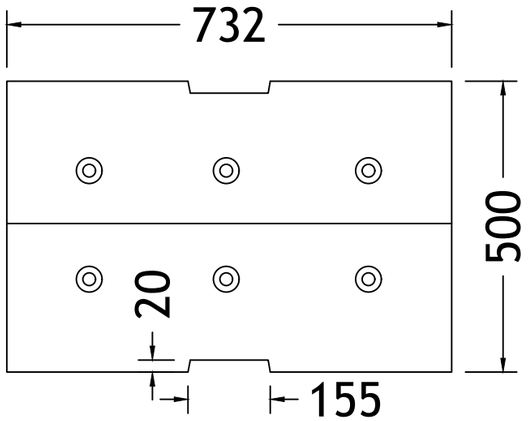

Extra Perforated Lid for SWD

TYPICAL DETAIL OF STORM WATER DRAINAGE (600mmx600m)

THIS DRAWING IS THE PROPERTY OF RUDRABHISHEK ENTERPRISES LTD. (REPL) AND SHALL NOT BE REPRODUCED OR USED WITHOUT THEIR PERMISSION. THE USER OF THESE DRAWINGS CONFIRMS THE ACCEPTANCE OF THE FOLLOWING CONDITIONS.

1) ANY DISCREPANCY BETWEEN THIS DRAWINGS AND DRAWINGS OF ARCHITECTS, MEP AND OTHER CONSULTANTS SHALL BE BROUGHT TO OUR NOTICE BEFORE CONSTRUCTION.
2) WORK SHALL NOT PROCEED WITHOUT APPROVAL OF DRAWINGS AND MATERIALS FROM THE ENGINEER-IN-CHARGE.
3) CONTRACTOR SHALL VERIFY ALL SITE CONDITIONS, LEVELS, AND DIMENSIONS BEFORE COMMENCEMENT OF WORK. ANY DISCREPANCY SHALL BE BROUGHT TO THE NOTICE OF THE ENGINEER.
4) ALL DIMENSIONS ARE IN MILLIMETERS (MM) UNLESS OTHERWISE SPECIFIED. DO NOT SCALE THE DRAWING FOLLOW WRITTEN DIMENSIONS ONLY.
5) ALL WORKS SHALL BE EXECUTED AS PER APPROVED DRAWINGS, SPECIFICATIONS, AND INSTRUCTIONS OF THE ENGINEER-IN-CHARGE.
6) GRADE OF CONCRETE SHALL BE M50 FOR PRECAST WORK AND P.C.C GRADE SHALL BE M15.
7) GRADE OF STEEL SHALL BE FE-500D.
8) BACK FILLING SOIL SHALL BE GOOD EARTH, COMPETED WELL TO 95% PROCTOR DENSITY.

NO.	DATE	REV.NO.	DESCRIPTION	APP.
1		R0	REVISIONS UPTO DATE AND ISSUED FOR TENDER	

CLIENT:-	BSES YAMUNA POWER LIMITED
CONSULTANT :-	RUDRABHISHEK ENTERPRISES LTD. DESPECTO KNOWLEDGE CENTRE PLOT NO.12, OPP. AMITY UNIVERSITY GATE NO. 2 ROAD, SECTOR 126, NOIDA,
DRAWING TITLE:-	TYPICAL DETAIL OF STORM WATER DRAINAGE (600MMX600MM)
	TENDER DRAWING

CHAINAGE:-	SECTION LENGTH:-	TOTAL LENGTH:-	
SURVEY DATE:-	SUBMISSION DATE:-	SCALE:- N.T.S	
DRAWING NO.:- 06	SUBMITTED BY:	SHEET NO.	SHEET SIZE A-3

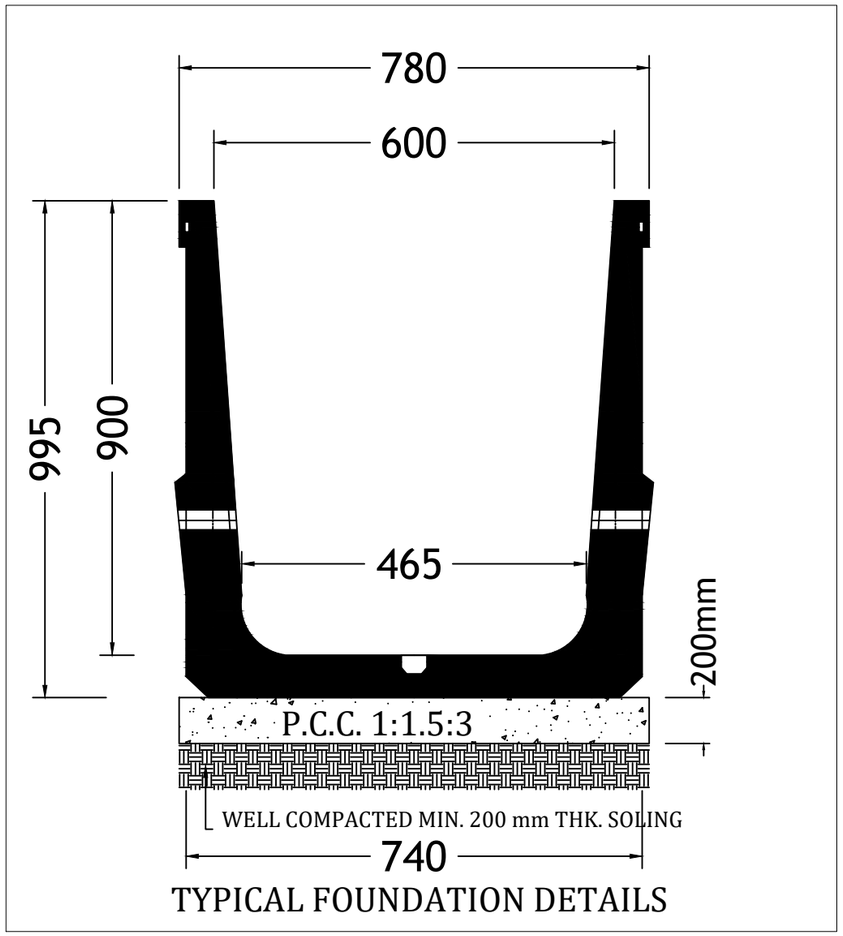

TYPICAL FOUNDATION DETAILS

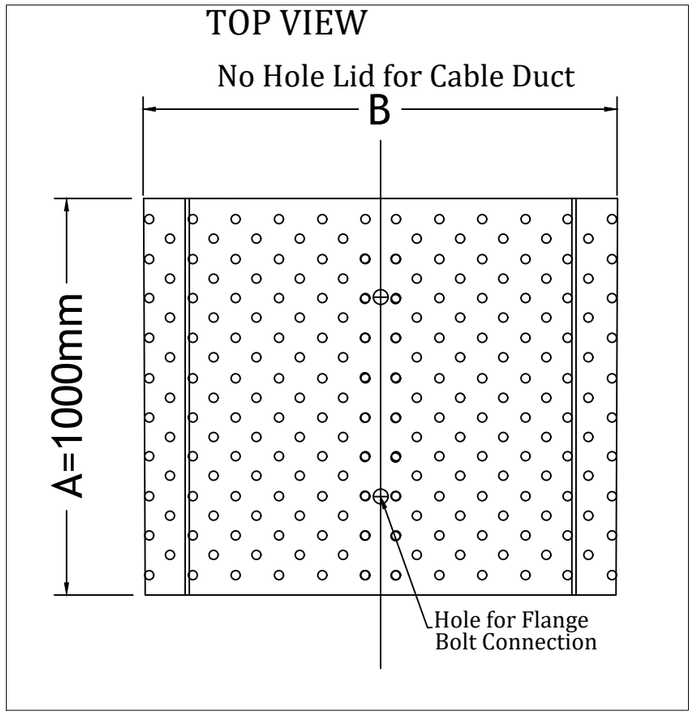

TYPICAL DETAIL OF MULTI-UTILITY DUCT(600mmx900mm)

THIS DRAWING IS THE PROPERTY OF RUDRABHISHEK ENTERPRISES LTD. (REPL) AND SHALL NOT BE REPRODUCED OR USED WITHOUT THEIR PERMISSION. THE USER OF THESE DRAWINGS CONFIRMS THE ACCEPTANCE OF THE FOLLOWING CONDITIONS.

1) ANY DISCREPANCY BETWEEN THIS DRAWINGS AND DRAWINGS OF ARCHITECTS, MEP AND OTHER CONSULTANTS SHALL BE BROUGHT TO OUR NOTICE BEFORE CONSTRUCTION.
2) WORK SHALL NOT PROCEED WITHOUT APPROVAL OF DRAWINGS AND MATERIALS FROM THE ENGINEER-IN-CHARGE.
3) CONTRACTOR SHALL VERIFY ALL SITE CONDITIONS, LEVELS, AND DIMENSIONS BEFORE COMMENCEMENT OF WORK. ANY DISCREPANCY SHALL BE BROUGHT TO THE NOTICE OF THE ENGINEER.
4) ALL DIMENSIONS ARE IN MILLIMETERS (MM) UNLESS OTHERWISE SPECIFIED. DO NOT SCALE THE DRAWING FOLLOW WRITTEN DIMENSIONS ONLY.
5) ALL WORKS SHALL BE EXECUTED AS PER APPROVED DRAWINGS, SPECIFICATIONS, AND INSTRUCTIONS OF THE ENGINEER-IN-CHARGE.
6) GRADE OF CONCRETE SHALL BE M50 FOR PRECAST WORK AND P.C.C GRADE SHALL BE M15.
7) GRADE OF STEEL SHALL BE FE-500D.
8) BACK FILLING SOIL SHALL BE GOOD EARTH, COMPETED WELL TO 95% PROCTOR DENSITY.

NO.	DATE	REV.NO.	DESCRIPTION	APP.
1		R0	REVISIONS UPTO DATE AND ISSUED FOR TENDER	

CLIENT:-	BSES YAMUNA POWER LIMITED
CONSULTANT :-	RUDRABHISHEK ENTERPRISES LTD. DESPECTO KNOWLEDGE CENTRE PLOT NO.12, OPP. AMITY UNIVERSITY GATE NO. 2 ROAD, SECTOR 126, NOIDA,
DRAWING TITLE:-	TYPICAL DETAIL OF MULTI-UTILITY DUCT (600mmx900mm)
	TENDER DRAWING

CHAINAGE:-	SECTION LENGTH:-	TOTAL LENGTH:-	
SURVEY DATE:-	SUBMISSION DATE:-	SCALE:- N.T.S	
DRAWING NO.:- 07	SUBMITTED BY:	SHEET NO.	SHEET SIZE A-3

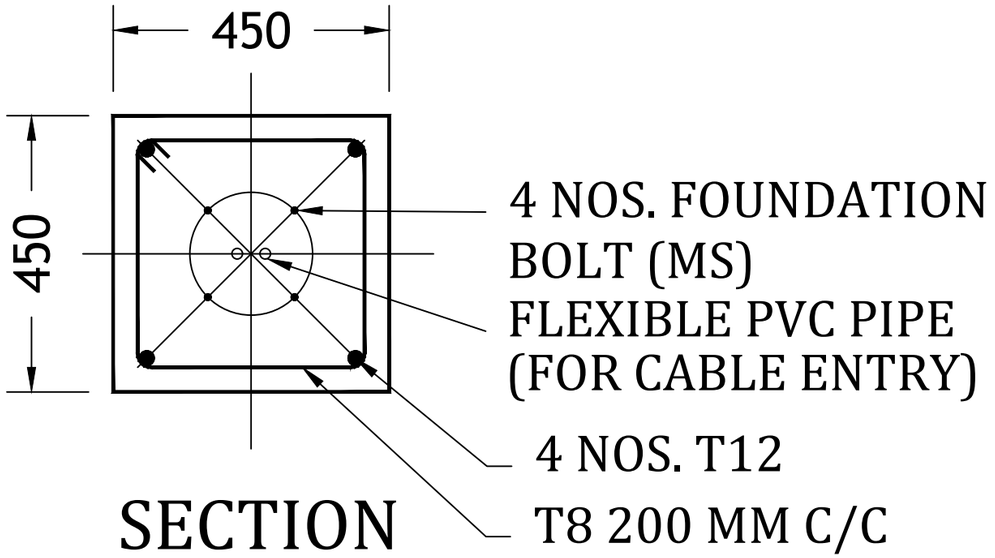

SECTION

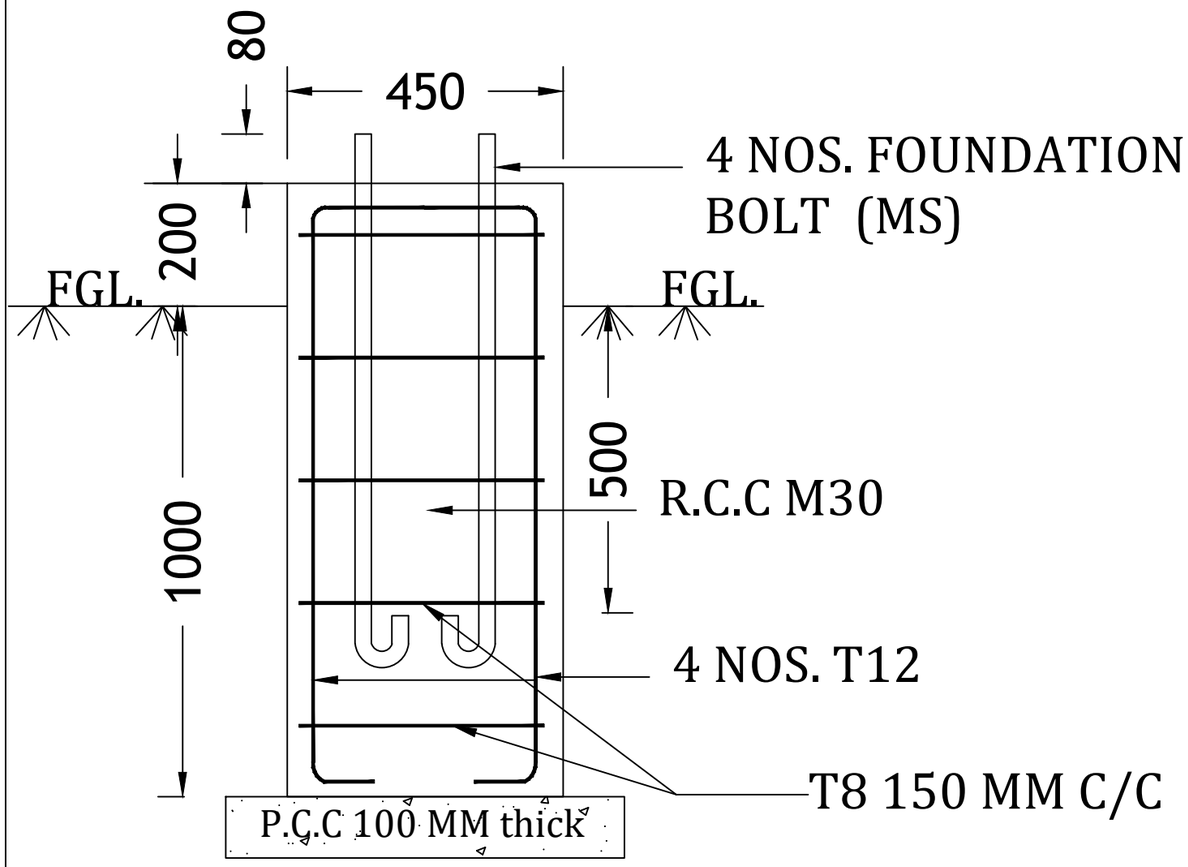

DETAIL OF POLE FOUNDATION

SCALE:- 1:10

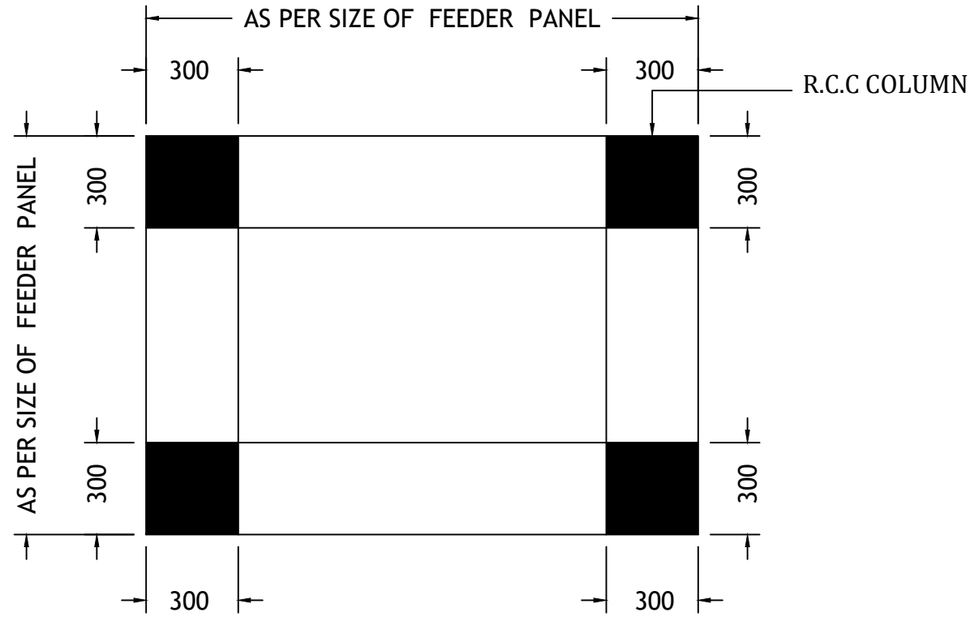

DETAIL OF FEEDER PANEL FOUNDATION (HEIGHT OF FDN.-MIN. 1100MM)

SCALE:- 1:20

THIS DRAWING IS THE PROPERTY OF RUDRABHISHEK ENTERPRISES LTD. (REPL) AND SHALL NOT BE REPRODUCED OR USED WITHOUT THEIR PERMISSION. THE USER OF THESE DRAWINGS CONFIRMS THE ACCEPTANCE OF THE FOLLOWING CONDITIONS.

1) ANY DISCREPANCY BETWEEN THIS DRAWINGS AND DRAWINGS OF ARCHITECTS, MEP AND OTHER CONSULTANTS SHALL BE BROUGHT TO OUR NOTICE BEFORE CONSTRUCTION.
2) WORK SHALL NOT PROCEED WITHOUT APPROVAL OF DRAWINGS AND MATERIALS FROM THE ENGINEER–IN–CHARGE.
3) CONTRACTOR SHALL VERIFY ALL SITE CONDITIONS, LEVELS, AND DIMENSIONS BEFORE COMMENCEMENT OF WORK. ANY DISCREPANCY SHALL BE BROUGHT TO THE NOTICE OF THE ENGINEER.
4) ALL DIMENSIONS ARE IN MILLIMETERS (MM) UNLESS OTHERWISE SPECIFIED. DO NOT SCALE THE DRAWING FOLLOW WRITTEN DIMENSIONS ONLY.
5) ALL WORKS SHALL BE EXECUTED AS PER APPROVED DRAWINGS, SPECIFICATIONS, AND INSTRUCTIONS OF THE ENGINEER–IN–CHARGE.
6) GRADE OF CONCRETE SHALL BE M50 FOR PRECAST WORK AND P.C.C GRADE SHALL BE M15.
7) GRADE OF STEEL SHALL BE FE–500D.
8) BACK FILLING SOIL SHALL BE GOOD EARTH, COMPETED WELL TO 95% PROCTOR DENSITY.

REVISIONS				
1		R0	UPTO DATE AND ISSUED FOR TENDER	
NO.	DATE	REV.NO.	DESCRIPTION	APP.

CLIENT:- BSES	BSES YAMUNA POWER LIMITED		
CONSULTANT :- REPL	RUDRABHISHEK ENTERPRISES LTD. DESPECTO KNOWLEDGE CENTRE PLOT NO.12, OPP. AMITY UNIVERSITY GATE NO. 2 ROAD, SECTOR 126, NOIDA,		
DRAWING TITLE:-	FOUNDATION DETAIL OF ELECTRIC POLE AND FEEDER PANEL		
	TENDER DRAWING		
CHAINAGE:-	SECTION LENGTH:-	TOTAL LENGTH:-	
SURVEY DATE:-	SUBMISSION DATE:-	SCALE:-	
DRAWING NO.:- 8	SUBMITTED BY:	SHEET NO.	SHEET SIZE A-3

SECTION V (SCOPE OF WORK)

SCOPE &TECHNICAL SPECIFICATIONS FOR ELECTRICAL WORKS (VOL 3.2)

INDEX

3.2.1 SCOPE OF WORKS.....3

3.2.2 General standards followed from:.....6

3.2.3 Technical Specifications 6

3.2.1 SCOPE OF WORKS

The scope of electrical work for the project is outlined below, detailing all activities, responsibilities, and deliverables associated with the electrical installations

1. Survey & Mapping of all existing electrical networks / elements prior to start of electrical works.
2. Transportation of free issue items, provided by BYPL (as detailed in point 36) and as per site requirements from BYPL store/site store to site.
3. Installation of Feeder Pillar boxes on plinth at appropriate locations as per load requirement, i.e., near the load centre on both sides of the road.
4. Installation of distribution boxes on existing poles, walls or any other suitable structure, to enable supply to consumers on both sides of the road through service cables or replacement of service cables, as per site requirement.
5. Laying of HT/LT cables (all types) in the electrical duct upto Feeder pillar then to poles (if any) or to Distribution boxes and upto consumer meters, as required.
6. Placement of feeder pillar and distribution boxes shall be done in such a way that maximum service cables can be accommodated with minimal replacement of existing service cables.
7. Laying of 50 x 6 mm galvanized mild steel earthing strip, including chemical earthing of feeder pillar, DB, poles, street light poles etc. and interconnected properly. Earthing of feeder pillars and distribution panels shall be done using the earthing strip.
8. Providing minimum 50 mm sand bedding in the electrical duct.
9. Providing brick separation between cables to maintain adequate spacing, followed by another 50 mm sand filling over the cables.
10. Minimum 30 mm thick, precast (M30 grade) tile shall be provided above cables in duct, provided for mechanical protection.
11. Radio Frequency Identification (RFID) marker, along with RFID marker locater may be provided along the cable route, inside the trench. (Every 15 m of trench length)
12. Safety Tape (Caution Tape) for cable identification may be provided along the cable route, inside the trench. (Along entire trench- 2 tapes per trench).
13. Termination of cables in feeder pillar / Distribution boxes, poles etc. using end terminations.
14. Planning and execution for connecting consumer service cables to distribution panels in minimum possible time. Wherever required, service cable replacement shall also be carried out.

15. Service cables if laid either through Bus bar box, service pillar or Feeder pillar, to be laid through Conduit pipe.
16. HDPE Pipes for laying cables to Bus bar box, Distribution box from Feeder Pillar may be provided. Provision for spare HDPE pipes may also be provided.
17. Damaged LTACB to be replaced, for adopting DSMS. LTACB to be added for feeder segregation.
18. Tagging/numbering of feeder pillars, cables, and DBs for easy maintenance.
19. Installation of route markers along cable route be provided.
20. After proper testing of underground electric network by Physical test, Meggering, DC Voltage test, Hi pot, Continuity, tightness of nuts & bolts at feeder pillar boxes, checking phase sequence, doing continuity test, physical checking of the cable sheath is intact, every equipment such as feeder pillar boxes, street light poles, distribution panels to be properly earthed and etc.
21. Conversion of existing O/H street light supply to underground system.
22. Proper segregation of street light and Service cable & LT feeders.
23. . If U/G HT cable found in the route, it needs to be placed in the duct
24. After proper planning and strategy, overhead supply shall be shifted to the underground network by making straight-through joints with existing cables or by connecting new cables directly to the LT side of distribution transformers.
25. After stabilization of underground supply, dismantling of overhead (O/H) lines and associated electrical network to be carried out.
26. Transportation of dismantled materials such as Cables, Poles, Distribution boxes, Feeder Pillar, Angles etc. to BYPL store / site store.
27. Ensuring all necessary safety measures during execution. Prior to commencement of work, shutdown of the electrical network along with PTW shall be obtained from BYPL.
28. Supply, Installation, Testing, and Commissioning (SITC) for FRP Street light poles & its fittings, infeed cable to be under Electrical vendor scope & SITC of Safe On Power Purifier at pole for safety against leakage current during rain in water logged area to be under Electrical vendor scope.
29. SITC of Distribution Substation Monitoring System (DSMS) for substation automation to be under Electrical vendor scope as per attached specification.
30. SITC of LV IoT of Feeder Pillars to be under Electrical vendor scope as per attached specification.

31. Deployment of trained electricians to ensure minimum interruption of supply to consumers during execution.

32. Mandatory safety compliance with CEA Safety Regulations, DERC guidelines etc, including implementation of PPE, barricading, LOTO procedures, and safety audits to be mandatorily followed.

33. As built drawings clearly mentioning all works undertaken at site to be shared to BYPL, post execution.

34. Detailed Completion report, post closure of the project to be shared with BYPL clearly detailing all works, drawings etc.

35. Entire Installation, Execution and commissioning inluding Cable laying, cable jointing, Cable terminations, Feeder Pillar, Distribution box, Service Pillars, RMU, ACB ,Street Light pole & cable laying, right upto Consumer meter, is in vendors scope.

36. For execution of the above work, the following items would be provided by BSES Yamuna Power Ltd at their store. These items can have different variants / types. Any other relevant items as required will also be included.

S. No	Item Description
1	CBL,PWR,300MM2;4;1.1KV;AL;XLPE
2	CBL,PWR,300MM2;3C;11KV;A2XWY
3	CBL,PWR,150MM2;3C;11KV;AL;XLPE
4	CBL,PWR,25SQMM;2 ;1.1KV;AL ;XLPE
5	CBL,PWR,10MM2;2;1.1KV;AL;XLPE;GS
6	CBL,PWR,50MM2;4C;1.1KV;AL
7	CBL,PWR,25MM2;4;1.1KV;AL;XLPE
8	CBL,PWR,25SQMM;2 ;1.1KV;AL ;XLPE
9	CBL,PWR,10MM2;2;1.1KV;AL;XLPE;GS
10	CBL,PWR,150MM2;4C;1.1KV;AL;XLPE
11	CBL,PWR,630MM2;1;1.1KV;AL;XLPE
12	RNG MAIN UNT,OUTDR,3,11KV,FRTU,3VCB
13	BOX,ELEC,3PH;PWR DISTR
14	BOX,ELEC,PVC;WLL;BUSBAR 3PH 8WAY;F/8MTR
15	DISTRIBUTION HEALTH MONITORING SYSTEM
16	SL,TAMPERPROOF ;POLYCARBONATE;ORNGE
17	CKT BKR,AIR,ACB;400A;415V
18	CKT BKR,AIR,ACB;1250A;415V
19	LT PANEL
20	FDR PILLAR,ELEC,A1;415V
21	FDR PILLAR,A1;415V AC TWO TIER

37. Following items would be provided by the contractors to execute the works to executing agency(s).

i. All Tools and Plants, emergency vehicles, transportation vehicles, cranes, crimpling tools, safety & barricading equipment's, temporary electricity connection etc.
ii. FRP Street light pole with LED Light as per the specification attached (6m height above ground)
iii. Power Purifier for Street Lights.
iv. Galvanised earthing strips.
v. Chemical earthing
vi. HDPE pipes
vii. Conduit pipe for service cables with clamps screw etc
viii. Distribution Substation Monitoring System as per attached specification
ix. Other items and petty items that have not been included the above list, the contractor has to arrange own his cost to completely execute the work
x. LV IoT, as per attached specification.
xi. Radio Frequency Identification (RFID) marker, along with one RFID marker locater to be handed over to BYPL post completion of the project
xii. Safety Tape (Caution Tape)
Note: All items supplied has to be either

3.2.2 General standards followed from:

1. Delhi Electricity Regulatory Commission (DERC)
2. Central Electricity Authority (CEA)
3. IS/IEC have to be followed for electrical equipment.
4. Material Test certificates have also be provided by the contractor

3.2.3 Technical Specifications

1. **Specification of Fibre Reinforced Plastic (FRP) Street Light Pole**
   i. Pole Dimension: a) Total Length of pole – 6m height above ground), b) Top OD- 89 mm (approx.), c) Bottom OD- 167 mm (approx.), d) Thickness- 6 mm (approx.),
   ii. FRP single arm with HDG mounting bracket and hardware: a) Length of cross arm- 1.0 m, b) Outer Dia: 50mm (min), c) Thickness: 4 mm (min)
   iii. HDG MS Base plate: 300x300x12mm
   iv. Hardware: a) Required numbers of J-type MS anchor bolts size M20x 600 mm (min) is to be provided, b) Required number of Nut and bolts with spring washers, are to be supplied, c) All the hardware should be hot dip galvanized
   v. Junction box: a) Internal junction box should consist of Stud type Power terminal block suitable for 4Cx25 sq mm XLPE cable for loop in loop out with adjacent pole, b) 6A, 2pole, MCB to be provided for controlling of LED street light
   vi. Finish surface: Polyurethane paint of shade- Metallic silver
   vii. Material: Anodized aluminium 16SWG
   viii. Background: Satin Silver
   ix. Details on Name Plate (minimum details shall be provided on Name plate): a) Description of Pole, b) Pole serial number, c) Customer

Name: BSES Yamuna Power Ltd, d) BYPL PO no and date, e) Warrantee period, f) Weight of the pole, g) Name or trade mark of manufacturer & Manufacturer contact details

x. The FRP shall be flame retardant (Type II or better) with low inflammability level having good dielectric and mechanical strength.
xi. The plastic shall be 'UV' stabilized to ensure that the moulded FRP pole should not change in colour, shape, size & not get brittle after exposure to UV rays
xii. Ultimate Tensile Strength: 1200 kg/sq cm (minimum)
xiii. Flexural Strength: 1500 kg/sq cm (minimum)
xiv. Impact strength: 110 kJ/sq m (minimum)
xv. Compressive Strength: 1100 kg/sq cm (minimum)
xvi. Water Absorption: 0.5 % by weight (maximum)
xvii. Glass Content: 62 % by weight (minimum)
xviii. Specific Gravity: 1.5-1.95 gm/cm^3
xix. Dielectric Strength: 3 kV/mm (minimum)

2. LED Bulb
   i. 60W LED bulb
3. Safe On Power Purifier
   i. Panels made out of 14/16SWG CRCA sheet.
   ii. MS Structures shall be pre-treated in Nine-tank chemical process, POWDER COATED heated in baking oven and finally finished in Siemens graycolor in orange-peel finish.
   iii. Panels to be dust and vermin proof, conforming at least to Ingress Protection degree, IP42.
   iv. Panels shall be pre-wired and in ready-to-install-at-site condition.
   v. Suitable for 415/230volt, 3/Single phase, 4-wire, 50-hertz supply.
   vi. Terminal at back side for cable termination
4. DSMS – as per attached technical details
5. LV IoT - as per attached technical details

All items shall be of makes approved by BSES. In case of non-availability or any technical constraints, alternative makes may be used only after obtaining prior approval from the client

Specification for Distribution Substation Monitoring System (DSMS)

Specification no: SP-DSMS-204-R0

Revision	00
Pages	27
Date	25 August 2023

Prepared By	Ashish Joshi	CES	28cf4d7d-6c91-4d53-be77-f490e198fb6b
Reviewed By	Puneet Duggal	CES	404db803-a91f-4234-85f0-0b2b5098ec32
	Rakesh Nayak	IT	d733ee1c-3392-4877-a8f4-841b41791764
Approved By	Gaurav Sharma	CES	23dc2de2-95de-4472-99a7-dea873f472b6
	Ashwani Aggarwal	IT	5f0ce1de-7a97-4b55-96af-424b60034ade

DocUUID : 0d2a03eb-4c5e-46c2-963a-886fa51e536e

Index

Record of Revision 3
1.0 Scope of Supply 4
2.0 Codes & standards 4
3.0 System Parameters 4
4.0 Distribution Substation Monitoring System (DSMS) Configuration 5
5.0 Distribution Substation Monitoring System (DSMS) Functional Requirement 6
6.0 Warranty and Marking 13
7.0 Quality Assurance, Inspection and Testing 13
8.0 Packing, Marking, Shipping, Handling and Storage 14
9.0 Deviations 15
10.0 Document Submission: 15
11.0 Delivery 16
Annexure–A: Guaranteed Technical Particulars (Data By Supplier) 17
Annexure –B: Recommended Accessories / Spares (Data By Supplier) 17
Annexure C: DSMS Software 18

DocUUID : 0d2a03eb-4c5e-46c2-963a-886fa51e536e

Record of Revision

Clause No.	Change in Specification	Approved By	Rev

DocUUID : 0d2a03eb-4c5e-46c2-963a-886fa51e536e

1.0 Scope of Supply

This specification covers the following for Distribution Substation Monitoring System (DSMS).

1.1 Design, manufacture, testing at manufacturer works before dispatch, packing, delivery of material along with submission of all documentation.

1.2 All accessories / hardware required for installation and operation for the system.

1.3 'Software as a Service' - Software, Storage, Integration and communication requirement.

2.0 Codes & standards

Materials, equipment and methods used in the manufacturing of above mentioned equipment shall conform to the latest edition of following

SL	Standard Number	Title
2.1	Indian Electricity Act	IE Act 2003
2.2	CEA Regulations	With latest amendments
2.3	Modbus V1.1b3	Modbus application Protocol
2.4	TLS	Transport Layer security Protocol
2.5	IEC 60870-5-104	Tele-control equipment and systems
2.6	MQTT 3.1.1.1	Message Queuing Telemetry Transport Protocol
2.7	RFC 7252	The Constrained Application Protocol (CoAP)

In the event of direct conflict between various order documents, the precedence of authority of documents shall be as follows-

i. Guaranteed Technical Particulars (GTP)

ii. Specification including applicable codes & standards

iii. Approved Vendor Drawings

iv. Other documents

3.0 System Parameters

3.1	Supply Voltage	
3.1.1	HV System	11 kV (P-P)- 3 Phase 3 Wire
3.1.2	LV System	415 V (P-P)- 3 Phase 4 Wire
3.2	Frequency	50 Hz ± 5%,
3.3	System Neutral Earthing	Solidly Earthed

DocUUID : 0d2a03eb-4c5e-46c2-963a-886fa51e536e

4.0 Distribution Substation Monitoring System (DSMS) Configuration

SL	Component	UoM	Monitoring Requirement		
			Type-1	Type-2	Type-3
4.1	Transformer (DT) Monitoring Unit	DTs	1	2	3
4.2	RMU Monitoring Unit	RMUs	1	2	3
4.3	LT Feeder Monitoring Unit				
4.3.1	LT Incomer Monitoring	Feeders	1	2	3
4.3.2	LT Feeders Monitoring	Feeders	8	16	24
4.4	Protocol Convertor	Nos	1	1	1
4.5	4G Gateway	Nos	1	1	1
4.6	Power Supply Unit	Nos	1	1	1
4.7	Enclosure	Nos	1	1	1

4.8 Distribution Substation Monitoring System (DSMS) Architecture

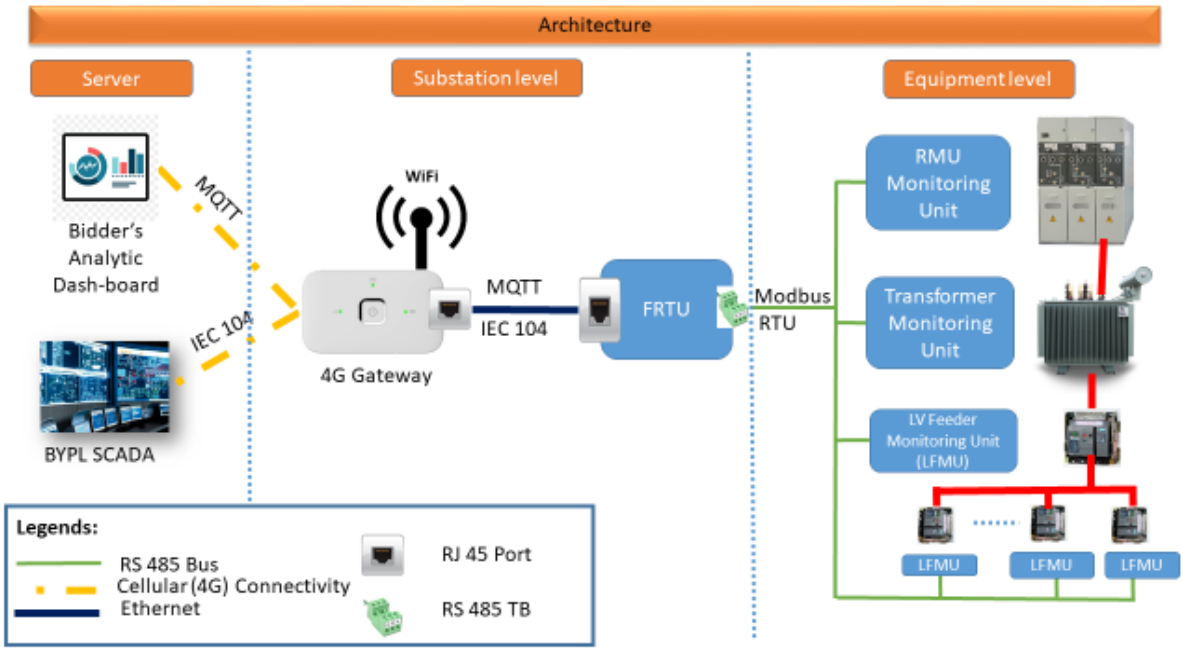

Note – Above architecture is indicative and may change during technical evaluation/ detailed engineering to optimize the system performance.

DocUUID : 0d2a03eb-4c5e-46c2-963a-886fa51e536e

5.0 Distribution Substation Monitoring System (DSMS) Functional Requirement

SL	Parameters	Description
5.1	Enclosure	a. All components shall be housed in a single enclosure. Labeling plate shall be provided for the enclosure and each component. b. Enclosure should be constructed using galvanized, 7-tank powder coated CRCA sheet of minimum thickness of 2 mm. c. Enclosure should be suitable for both floor mounting and wall mounting. Mounting hardware shall be Stainless steel only. d. Enclosure should have base frame of 750 mm height. Cover should be provided over base frame for good aesthetics. e. Enclosure should have Ingress Protection rating of IP55. f. Enclosure shall have locking and padlocking arrangement. g. Enclosure shall be provided with rain canopy (min slope 10°) h. Minimum 02 earthing studs of size M8 shall be provided. i. Enclosure door shall be earthed using insulated stranded copper cable of size 2.5 sqmm. j. Proper sign shall be provided for earthing points. k. Enclosure should have appropriate ventilation and cooling arrangement for dissipation of heat generated by system.
5.2	Transformer Monitoring Unit	
5.2.1	Application	This unit shall measure various parameters of Distribution Transformer using wireless or wired sensors.
5.2.2	Construction	a. This unit shall consist of a central unit and sensors. b. Sensors shall be connected to central unit (preferably via wireless link). c. Monitoring unit and sensors shall suitable for mounting on LT side of transformer/ substation wall/ fencing. d. All the sensors and main unit shall have enclosed in IP65 rated enclosures. Metal enclosure should have provision to earth enclosure body. Non-metallic enclosure must be fire resistant (FV0 flammability level) & ROHS compliant.

DocUUID : 0d2a03eb-4c5e-46c2-963a-886fa51e536e

SL	Parameters	Description
		e. At least 02 no's Digital Inputs (DI), 02 no's Digital Outputs (DO), 01 no Analog Input and 01 no Analog output shall be provided spare in transformer monitoring unit. f. All signaling, control, power supply voltage used shall be on 24-volt DC. g. For Wired Sensors: h. Sensors to monitoring units shall be connected by digital inputs (Potential free contacts at sensor end), standard Analog inputs (4-20 mA signals) or Modbus RTU over RS485. i. Sensor output should not be at live potential. Output should be optically isolated. j. Connecting cable from sensor to transformer monitoring unit should be routed through conduit. k. For Wireless Sensors: l. In case of wireless sensors are provided with self-contained battery, it should be designed for at least 10-year life time in operating conditions without replacement. m. Sensor to monitoring unit communication protocol should be either Modbus TCP, MQTT or CoAP only. n. All wiring shall be properly ferruled, tagged and routed through properly clamped conduit. o. Transformer oil level measurement shall be done by either float switch or ultrasonic sensor. p. Float switch for transformer oil measurement shall provide an oil level in percentage of total length of conservator tank. Calibration of sensor shall be done as per transformer type on which sensor is to be installed. q. Voltage measurement shall be done by direct tapping of voltage from transformer secondary terminals. r. Unit should have overvoltage protection & transient protection.

DocUUID : 0d2a03eb-4c5e-46c2-963a-886fa51e536e

SL	Parameters	Description
5.2.3	Functionality	Unit shall be able to measure and provide following parameters of transformer with date and time: a. Transformer Oil Level (% of total Volume or oil height in tank) b. Transformer Oil Temperature in Deg C c. Transformer Oil moisture content. d. Transformer Lug Temperature in Deg C (All phases and Neutral) e. Ambient Temperature in Deg C f. Ambient relative Humidity in %
5.3	Ring Main Unit (RMU) Monitoring Unit	
5.3.1	Application	Unit should be able to monitor Ring Main Unit.
5.3.2	Construction	a. Unit will be installed in LV compartment of RMU or at nearby wall b. RMU shall have potential free NO and NC contacts for status of breaker, LBS, earth switch, dis-connector, etc. c. FPI reset and breaker trip contacts shall also be wired with potential free switch. d. Terminal block provided at RMU are suitable for 2.5 Sqmm multi stranded flexible copper cable. e. Unit shall be enclosed in IP65 rated enclosures. Metal enclosure should have provision to earth enclosure body. Non-metallic enclosure must be fire resistant (FV0 flammability level) & ROHS compliant. f. At least 02 no's Digital Inputs, 02 no's Digital Outputs, 01 no Analog Input and 01 no Analog output shall be provided spare in monitoring unit. g. All signaling, control, power supply voltage shall be 24-volt DC. h. All wiring shall be properly ferruled, tagged and routed through properly clamped conduit.
5.3.3	Functionality	a. List of signals required to be measured is mentioned below.

DocUUID : 0d2a03eb-4c5e-46c2-963a-886fa51e536e

SL	Parameters	Description
		However, bidder may offer any parameter in addition to the list. i. SF6 gas alarm ii. LBS 1 close and open status. iii. LBS1 earth switch status iv. FPI 1 Status v. LBS 2 close and open status vi. LBS 2 earth switch status vii. FPI 2 status viii. Breaker 1 Close and Open Status ix. Breaker1 Trip Status x. Breaker 1 Dis-connector close and open Status xi. Breaker 1 Earth switch close an open Status xii. Breaker 2 Close and Open Status xiii. Breaker 2 Trip Status xiv. Breaker 2 Dis-connector close and open Status xv. Breaker 2 Earth switch close an open Status xvi. Relay1 data over Modbus RTU. xvii. Relay2 data over Modbus RTU. b. Following is the list of control signals required to be integrated: i. FPI 1 Reset ii. FPI 2 Reset iii. Breaker 1 Trip iv. Breaker 2 Trip
5.4	LT Feeder Monitoring Unit	
5.4.1	Application	This unit should be capable of monitoring upto 9 nos LT feeders including 01 no incomer and 08 no's outgoings.
5.4.2	Construction	a. Monitoring units should be modular and customizable as per the site-specific needs. b. System shall include central unit and individual sensors for each feeder capable of measuring the parameters mentioned in this specifications. c. Central unit should be suitable to be mounted on substation

DocUUID : 0d2a03eb-4c5e-46c2-963a-886fa51e536e

SL	Parameters	Description
		wall/ fencing and the sensors shall be suitable for mounting on LT-ACB itself. d. All the sensors and main unit shall have enclosed in IP65 rated enclosures. Metal enclosure should have provision to earth enclosure body. Non-metallic enclosure must be fire resistant (FV0 flammability level) & ROHS compliant. e. Individual Feeder Current measurement for all three phases and neutral through split core current transformer (Primary current- 2500A, 2000A, 1600A, 1250A or 800A)as per site requirement for Incomer and 400A for outgoing with minimum accuracy class of 0.5. f. 3 phase Voltage measurement shall be done by direct tapping at LT feeder cable terminations. g. This unit should have over voltage protection and transient protection. h. Any accessible metallic part should not be at live potential and properly earthed. i. Sensors shall be connected to central unit (preferably via wireless link). j. All signaling, control, power supply voltage used shall be 24-volt DC. k. For Wired Sensors: i. Modbus RTU over RS485. ii. Sensor output should not be at live potential. iii. Connecting cable from sensor to central unit should be routed through conduit. l. For Wireless Sensors: i. In case of wireless sensors are provided with self-contained battery, it should be designed for at least 10-year life time in operating conditions without replacement. ii. Sensor to monitoring unit communication protocol should be either Modbus TCP, MQTT or CoAP only. m. All wiring shall be properly ferruled, tagged and routed through

DocUUID : 0d2a03eb-4c5e-46c2-963a-886fa51e536e

SL	Parameters	Description
		properly clamped conduit.
5.4.3	Functionality	Following is the list of parameters to be measured for each feeder: a. LT circuit Breaker On and OFF status b. LT Circuit Breaker Trip Status c. Each Phase Current including neutral d. Each Phase Voltage e. Phase wise and Three Phase signed Power Factor f. Three Phase signed active power g. Three Phase signed reactive power h. Three Phase Apparent Power
5.5	Power Supply Unit	a.3 Phase 4 Wire AC- 415 volt. b.Unit should able to withstand maximum system voltages i.e. 456 Volt c.DC supply voltage to each unit- 24 V DC d.Battery backup- at least 4 hour.
5.6	4G Gateway	a. 4G to Ethernet modem/ 4G router to provide WAN connectivity. b. At least 02 no's spare Ethernet port shall be provided in addition to use by offered system. c. Power supply- 24 Volt DC d. Indication for WAN and LAN connectivity shall be provided. e. Functionality to support IOT SIM (M2M SIM) with multiple carrier options. Only Supply of SIM shall be in scope of BYPL. Bidder shall provide data sizing and details of data plan required in SIM as per deployed solution.
5.7	Enclosure	All units and sensors shall be suitable to use outdoor. IP 65 enclosure shall be used to house any electronic circuitry.
5.8	Communication and integration requirement	
5.8.1	Local communication within substation	a. Protocol: Modbus, COAP, MQTT or IEC 61850 or any other open protocols. b. Data Model: Data model shall be approved by BYPL.

DocUUID : 0d2a03eb-4c5e-46c2-963a-886fa51e536e

SL	Parameters	Description
5.8.2	WAN communication	a. IEC 104 and MQTT over TLS 1.2 or latest. DSMS should be able to communicate data on both protocols simultaneously. b. Data model shall be be approved by BYPL. c. Communication over MQTT should use Json format (key value pair).
5.8.3	Integration with SCADA	All units shall be integrated with BYPL SCADA over 104 protocol. Additionally they should also able to provide integration other software using Secure MQTT, Secure Modbus, IEC 61850 protocols.
5.9	DSMS Software	Bidder shall offer DSMS Software as 'Software as a Service' considering data acquisition, storage and data analytics as mentioned in 'Annexure-C'.
5.10	Environmental Parameters	System shall able to work satisfactory in following environmental conditions.
5.10.1	Temperature	a. Limit rage for storage: -20 Deg C to +70 Deg C b. Limit Range of Operation: -20 Deg C to +55 Deg C
5.10.2	Humidity	a. Relative humidity: 0 to 96 % Rh
5.11	Cyber Security	a. System should comply with all the guidelines regulation published by CEA/ CERTIN/ NPIIC.
5.12	Cables	Cable of appropriate rating for connection between all components of DSMS and substation equipment shall be in bidders scope
5.13	Accessories	a. All accessories required for commissioning of DSMS shall be in bidder's scope. b. This includes cable conduit, cable support, cable ties, cable clamps, connectors, lugs, ferrules, tags c. Hardware for mounting of enclosure of DSMS based on site requirement including floor mounting and wall mounting

6.0 Warranty and Marking

SL	Parameter	Technical Requirement
6.1	Comprehensive On	36 Months from the date of Commissioning. Comprehensive On

DocUUID : 0d2a03eb-4c5e-46c2-963a-886fa51e536e

SL	Parameter	Technical Requirement
	Site Warranty	Site Warranty include following: a. Troubleshooting of hardware at site in-case of non-communication, parameters corruption etc. b. Replacement of faulty units at site. c. Provide onsite support to BYPL as and when required.
6.2	Marking	a. Following details shall be printed on name plate i. Sr. Nos. ii. Name of manufacturer and Country of Origin iii. Month and year of manufacturing iv. Ratings& details of Equipment v. Communication port provided and hardware ID of same. vi. Data Exchange Protocol b. Proper marking for voltage and current terminals and phase identification shall be provided. c. Making for earth terminals and port. d. Marking shall be provided for power supply terminals along-with their voltage ranges.

7.0 Quality Assurance, Inspection and Testing

SL	Parameter	Technical Requirement
7.1	Vendor's Quality Assurance Plan (QAP)	To be submitted for Purchaser's approval.
7.2	Sampling Method	Sampling Method for quality checks shall be as per relevant IS/ IEC/ IEEE and Purchaser's prior approval shall be taken for the same.
7.3	Inspection Hold-Points	To be mutually identified, agreed and approved in Quality Plan.
7.4	Type tests	a. Bidder Shall submit type tests of the offered items as per relevant standards. b. Type tests for IP rating, Environmental testing and safety class shall be submitted as per relevant IS/ IEC.
7.5	Routine tests	a. All the components shall be subjected to routine tests as per

DocUUID : 0d2a03eb-4c5e-46c2-963a-886fa51e536e

SL	Parameter	Technical Requirement
		relevant standards. b. Bidder need to specify all the routine tests in their quality plan. c. Calibration certificates of sensors shall also be provided.
7.6	Acceptance tests and Inspection	a. Acceptance tests shall be carried out as per relevant standards and mutually agreed points. b. Purchaser reserves the right to inspect /witness all tests at Seller's works at any time, prior to dispatch, to verify compliance with the specification/ standards. c. In-process and / or final inspection call intimation shall be given in advance to purchaser.

8.0 Packing, Marking, Shipping, Handling and Storage

SL	Parameter	Technical
8.1	Packing	Every equipment shall be properly sealed / packed in environmental friendly boxes/ cartons for protection against damage, vibration and ingress of dust and moisture.
8.2	Packing for accessories and spares	Robust non-returnable packing case with all the above protection & identification Label.
8.3	Marking	On each packing case, following details are required: a. Individual serial number b. Purchaser's name c. PO number (along with SAP item code, if any) & date d. Equipment Tag no. (if any) e. Destination f. Manufacturer / Supplier's name g. Address of Manufacturer / Supplier / it's agent h. Type, rating and other description of equipment i. Country of origin j. Month & year of Manufacturing k. Case measurements l. Gross and net weights in kilograms

DocUUID : 0d2a03eb-4c5e-46c2-963a-886fa51e536e

SL	Parameter	Technical
		m. All necessary slinging and stacking instructions
8.4	Test reports & calibration Certificate	Routine test report and calibration certificates
8.5	Shipping	The seller shall be responsible for all transit damage due to improper packing.
8.6	Handling and Storage	Manufacturer instruction shall be followed. Detail handling & storage instruction sheet /manual to be furnished before commencement of supply.

9.0 Deviations

SL	Parameter	Technical
9.1	Deviations	Deviations from this Specification shall be stated in writing with the tender by reference to the Specification clause/GTP/Drawing and a description of the alternative offer. In absence of such a statement, it will be assumed that the bidder complies fully with this specification.

10.0 Document Submission:

Drawing submission shall be as per the matrix given below.

a. All documents/ drawing shall be provided in soft copy only in a USB memory drive.
b. Language of the documents shall be English only.
c. Incomplete submission shall be liable for rejection.
d. Document check sheet compliance shall be the first sheet for each submission stage.
e. No submission is acceptable without check list compliance.

Order of document shall be strictly as per the check list.

SL	Detail of Document	Bid	Approval	Pre Dispatch
10.1	Guaranteed Technical particulars (GTP)	Required	Required	
10.2	Deviation Sheet, if any	Required	Required	
10.3	GA / cross sectional drawing showing all the views / sections	Required	Required	
10.4	Sample demonstration of each type & rating offered. (Need not to be submitted with bid)	1 no's	1 no's	

DocUUID : 0d2a03eb-4c5e-46c2-963a-886fa51e536e

SL	Detail of Document	Bid	Approval	Pre Dispatch
10.5	Any software and accessories required for installation/ operation	Required	Required	
10.6	Manufacturer's Quality Assurance Plan and certification for quality standards	Required	Required	
10.7	Type Test report of offered model/ type/ rating	Required		
10.8	Complete product catalogue and user manual.	Required		
10.9	Customer Reference List	Required		
10.10	Recommended list of spare and accessories	Required		
10.11	Program for production and testing (A)		Required	Required
10.12	Detailed installation and commissioning instructions		Required	Required
10.13	As Built Drawing		Required	Required
10.14	Operation and maintenance Instruction as well as trouble shooting charts/ manuals		Required	Required
10.15	Inspection and test reports, carried out in manufacturer's works			Required
10.16	Routine Test certificates			Required
10.17	Test certificates of all bought out items			Required

11.0 Delivery

SL	Parameter	Technical
11.1	Delivery	Vendor shall dispatch the material, only after the Routine Tests/Acceptance Tests of the material witnessed/waived by the Purchaser, and after receiving written Material Dispatch Clearance Certificate (MDCC) from the Purchaser.

Annexure–A: Guaranteed Technical Particulars (Data By Supplier)

Bidder shall furnish the GTP format with all details against each clause of this specification.

Bidder shall not change the format of GTP or clause description.

Bidder to submit duly filled GTP in hard copy format with company seal.

Clause	Clause Description	Manufacturer's Reply

DocUUID : 0d2a03eb-4c5e-46c2-963a-886fa51e536e

No.		
1		
2		
3		
5		

Bidder / Vendor seal / signature ----------

Name of the bidder	
Address of the bidder	
Name of contact person	
Telephone number and email id	

Annexure –B: Recommended Accessories / Spares (Data By Supplier)

SL	Description of spare part	Unit	Quantity
1		No	
2		No	
3			
4			

Annexure C: DSMS Software

1. Functional Requirement:

SL	Parameters	Requirement
1.1	Location	Software System to be deployed at Bidders cloud.
1.2	Service Model	Bidder shall provide software system as a ‘Software as a Service’ (SaaS) model.

DocUUID : 0d2a03eb-4c5e-46c2-963a-886fa51e536e

SL	Parameters	Requirement
1.3	Cloud Service provider	AWS, Azure, Yotta and Ctrls, Based in India only.
1.4	Functional Requirement of Software	Offered software shall have following functionalities
1.4.1	Data Acquisition	a. Software System should collect data from substations and field devices over IEC 61850, MQTT, Modbus and IEC 104 protocols from different makes of devices. b. System should have ability to configure data structure and mapping of data points as per field device. c. Data collection scheduler shall be provided that will collect user configurable set of data from remote field devices in a user configurable frequency by above mentioned communication protocols over mentioned communication mediums. d. Facility for on demand data collection shall also be provided. e. Facility shall also be provided for manual importing of data in bulk.

DocUUID : 0d2a03eb-4c5e-46c2-963a-886fa51e536e

SL	Parameters	Requirement
1.4.2	Data processing and storage	a. Software system should be able to process acquisitioned data base of user configurable rules and workflows. b. System has to ensure the data integrity check on data received from data collection systems. It shall manage source of origin like direct from sensor / system / file upload etc. c. Data uniformity as per Unit of Measurement (UOM) shall be maintained including decimal points. d. System shall maintain date-time stamp for each data/event and it shall be sync with NTP server. e. A data estimation mechanism shall also be provided to fill gaps between data. f. Facility shall be provided to tag collected data such as date and timestamp, Name of substations, name of RMU, DT and feeders and phases etc. g. After processing, data shall be stored in a data repository (Database). h. Database shall be sized to store all the data collected from field devices or any other means over the period with all the tagging information's. i. System shall have backup and archival features for complete system which can be initiated as per schedule or by manual request on tape drive. The system shall support recoverability feature using commonly available and industry standard backup & archival applications and approaches. j. Stored data shall be handed over to BYPL after completion/ termination of software services or as and when asked by BYPL in a SQL database format along with details of schema and link between schemas.
1.4.3	System management and	a. Complete system can be accessed through various accounts based on rights provided to them. A right

DocUUID : 0d2a03eb-4c5e-46c2-963a-886fa51e536e

SL	Parameters	Requirement
	Data reporting, presentation	management functionality shall also be provided. b. Each user shall have its own dashboard based on right and permissions provided to them along-with user id and password. c. All the activity of users shall be logged. d. Data shall be presented through following user interactive dashboard: e. All the stored data shall be made available for integrated modules and systems.
1.4.3.1	System Administrator	This dashboard should be following features: a. View and creation of Number of users. b. View and creation of data integrations (Field devices etc.) c. View and creation of web services. d. Status of communication status of field devices. e. Status of cloud and software resources health and utilization such as CPU, RAM, Disk, Various software modules and services send or receive messages, web services etc. A resources monitor shall also be provided to see a graphical pattern of resources utilizations. f. The cloud hosting provider shall employ monitoring and analytics tools to track the performance of the hosted infrastructure and provide clients with insights into resource utilization. g. View of Performance matrix. h. Any other administrative work required.
1.4.3.2	User	a. An over view of complete network shall be provided. b. Appropriate aggregation mechanism shall be provided to sum all the substation, feeders transforms etc. c. Over all Network performance index such as SAIFI, SAIDI shall also be provided d. Dashboard shall also support different view such as device view, SLD view, Geographical view etc.

DocUUID : 0d2a03eb-4c5e-46c2-963a-886fa51e536e

SL	Parameters	Requirement
		e. Data can be grouped by various Hierarchy levels such as Company, Circle, Division. Sub Division, substation, RMU DT and LT Feeders. f. Data can be grouped, aggregated over various heat maps, time series graphs etc. g. Suitable Statistics over data should also be provided such as percentiles, Means etc. h. User dashboard shall be self-configurable based on user rights such as centralize user dashboard, Circle Dashboard, Division Dashboard, subdivision dashboard, substation dashboard etc.
1.4.4	Integration with other systems	Software system shall be accessible by various systems of BYPL in a secure manner though encrypted web services.
1.5	Cloud Requirement	a. Bidder shall be responsible for setting up, installation, configuration, management, upgradation, and migration of application servers, database servers/storage. b. Cloud Data Centers (DC & DR) should have jurisdiction in India. c. The proposed data center must be Tier IV or above for better availability of cloud services CSP shall guarantee 99.9% Uptime of data center including all services as per SLA d. Service provider shall have public Services in DMZ zone and High security services in MZ Zone. e. The Primary and DR Data Centre (Cloud) shall be physically located in India. The proposed Datacenter for DR should be in different cities. The data should not be transferred out side of country's boundary f. The cloud hosting provider shall provide reliable and high-speed network connectivity to ensure smooth data transmission and low-latency access to hosted applications. g. The cloud hosting provider shall offer 24/7 technical support

DocUUID : 0d2a03eb-4c5e-46c2-963a-886fa51e536e

SL	Parameters	Requirement
		to assist clients with any issues or queries related to the cloud infrastructure. h. The cloud hosting provider shall maintain strict privacy policies and data protection measures to safeguard client data and comply with applicable data protection laws. i. Maintain and manage the required network components for the cloud service. Setup and configure the VMs, storage, Network, Database etc. at DR site meeting RPO and RTO (Recovery Time Operations) requirements of Service provider shall provide access to logs for analysis. j. Service provider shall be responsible for implementation, management and monitoring of k. DDOS, IPS, IDS Services, etc. l. Service provider will implement anti-malware and conduct regular vulnerability scanning and penetration testing of systems and infrastructure. m. Service Provider shall configure external connections to the hosting infrastructure required to upload database/files etc. n. Service provider is expected to understand the complete architecture of existing applications and processes necessary for smooth migration of applications and databases including interdependencies between applications and data. o. Service provider shall be responsible for deployment of Security patches on Hardware and Software. p. Bidder will be responsible for migrating to cloud and managing the cloud services. q. Deployment of New Applications on cloud, security administration, planning and implementation of cloud management and monitoring portals for complete infrastructure and services procured. r. Bidder shall be responsible for monitoring and reporting

DocUUID : 0d2a03eb-4c5e-46c2-963a-886fa51e536e

SL	Parameters	Requirement
		services. s. Provisioning of scalable storage capacity as per requirements of client and availability of such services as per agreement. t. Service provider shall ensure committed time taken for restoration of data from Backup as claimed. u. Service provider should provide Security protocols, Denial of Service (DoS, DDoS) attack), management and administration and audit capabilities of offerings, setting up of DR facilities, etc. v. Service provider shall be responsible for security of Facilities, Physical Security of Hardware, Network infrastructure and virtualization Infrastructure. w. Service provider shall provide necessary technical documentations, design documentations, standard Operating Procedures (SOPs) required for operations and management of services. x. Service provider shall have provision to provide and support additional VM requirements and related services. y. The service provider shall provide necessary details including sizing, current loads, utilization, expected growth/demand and other details for scale up/scale down at the end of first year in close coordination with Client. z. Service provider shall be responsible for implementation of tools and processes for monitoring the availability of applications, responding to system troubleshooting. aa. Monitoring of performance, resource utilization and other events such as failure of services, degradation of services, availability of network, storage, Database systems, OS etc. bb. The Service Provider will train and transfer the knowledge to the replacement agency or client team to ensure continuity and performance of services post expiry of

DocUUID : 0d2a03eb-4c5e-46c2-963a-886fa51e536e

SL	Parameters	Requirement
		Contract.
1.2	System architecture	Software System shall support Service Oriented Architecture and modular based approach in design, operations and implementation. Software shall be web based.
1.4	Design Attributes	Software System shall be robust and based on following basic attributes: scalability, availability, reliability, safety, security, confidentiality, integrity and maintainability.
1.5	Environment	Software System shall be capable of running in a clustered environment to provide high availability, reliability, scalability (vertically and horizontally). It must perform under periods of high usage and high processing loads based on changing business and technical requirements.
1.6	System Monitoring	Software System shall have provision to monitor and optimize different application processes and services in-terms of CPU usage and memory.
1.7	Life cycle support	Software System shall support device life cycle management like device registration, installation, provisioning, maintenance, decommissioning etc.
1.9	Data management	a. It will provide user interface for control center for administrative works through web services. b. Multiple clients can also be connected through web based services. c. System shall support with multiple database platforms like Oracle, MS SQL, MY SQL etc. d. The software provider shallimplementregulardatabackupproceduresandhaveacomprehensivedisasterrecoveryplantoensuredataresilienceandrapidrecoveryincaseofunforeseenincidents.
2.0	Data Integrity	a. System shall have an automatic process for files upload, report generation, event notification. b. System shall provide end-to-end data protections to ensure no data is lost or corrupted during processing, storage, and

DocUUID : 0d2a03eb-4c5e-46c2-963a-886fa51e536e

SL	Parameters	Requirement
		transportation between applications and interfaces. c. System shall support interface to mail system, SMS gateway configuration in alarm dispatch. e. System shall have the ability to recover from a hardware or application failure. It must have built-in redundancy and fail-over architecture to ensure seamless system recovery.
1.6	Cyber Security	The cloud hosting provider shall implement robust security measures to safeguard client data, applications, and infrastructure from unauthorized access, data breaches, and other security threats. Following security mechanism shall be provided in system and communication: a. Data encryption at transit and at rest at various levels. b. Two-way Authentication mechanism. c. Logging of all events. d. Alerts generation in case of any security breach. e. Any other requirement specified by CEA, CERTIN and NPIIC. f. Bidder has to carry out a VAPT (Vulnerability Assessment and penetration Testing) of the complete system from third part before go live of the system.
1.7	Training	Bidder should provide minimum 01-week training to BYPL officials on the following topics at BYPL Delhi Office. a. Operation of software system. b. Troubleshooting in software system. c. Management and control of data and user rights. d. Data archive. e. Maintenance and all deployment activities required in case of any abnormality or server restart.
1.8	Compliance and Certifications:	The cloud hosting provider shall adhere to relevant industry standards, regulations, and certifications to ensure compliance and data security.

DocUUID : 0d2a03eb-4c5e-46c2-963a-886fa51e536e

SL	Parameters	Requirement
1.9	Migration Assistance	The cloud hosting provider shall provide support and guidance during the future migration of client applications and data to the cloud platform and Vice Versa.
1.10	Performance Criteria	The Software provider shall ensure high-performance levels and provide guaranteed uptime as per following Service Level Agreement (SLA) to minimize downtime and ensure reliable service availability.

2. Performance Requirement:

SL	Performance Metric	Measurement Criteria	Target Value	Measurement Method
2.1	Response Time	Page load time	≤ 2 seconds	Real-user monitoring
		Data retrieval time	≤ 1 second	Performance testing
2.2	Uptime and Availability	Uptime percentage	≥ 99.9%	Monitoring and reporting
		Maximum downtime per month	≤ 43.8 minutes	Monitoring and reporting
2.3	Scalability	Concurrent users supported	≥ 5000	Scalability testing
		Resource scaling time	≤ 5 minutes	Performance testing
2.4	Latency	Round-trip latency	≤ 50 milliseconds	Network monitoring tools
2.5	Data Throughput	Data upload speed	≥ 50 Mbps	Network monitoring tools
		Data download speed	≥ 100 Mbps	Network monitoring tools
2.6	Data Backup and Recovery	Backup frequency	Daily	
		Recovery time objective (RTO)	≤ 4 hours	
		Recovery point objective (RPO)	≤ 1 hour	
2.7	Security and Compliance	Encryption standards	AES-256/ AES	Security

DocUUID : 0d2a03eb-4c5e-46c2-963a-886fa51e536e

SL	Performance Metric	Measurement Criteria	Target Value	Measurement Method
			128	documentation
2.8	Integration Performance	Web service/ API response time	≤ 200 milliseconds	API monitoring and testing
2.9	End Devices Concurrent connectivity Load	Maximum End Devices connected	>5000	Load Testing
2.10	User Concurrent Load	Maximum concurrent users	≥ 100	Load testing
2.11	User Experience (UX)	Page load time	≤ 2 seconds	Real-user monitoring
		Navigational responsiveness	≤ 300 milliseconds	Real-user monitoring
2.12	Transaction Throughput	Transactions per second	≥ 1000	Load testing
2.13	Geographical Performance	Geographical latency	≤ 100 milliseconds	Network monitoring tools
2.14	Reporting and Analytics	Report generation time	≤ 5 seconds	Performance testing
2.15	Monitoring and Reporting	Real-time monitoring	Yes	Monitoring tools and reporting
2.16	Support and Maintenance	Initial response time	≤ 4 hours	
		Issue resolution time	≤ 24 hours	

DocUUID : 0d2a03eb-4c5e-46c2-963a-886fa51e536e

Indicative Design for FRP Street Light Pole

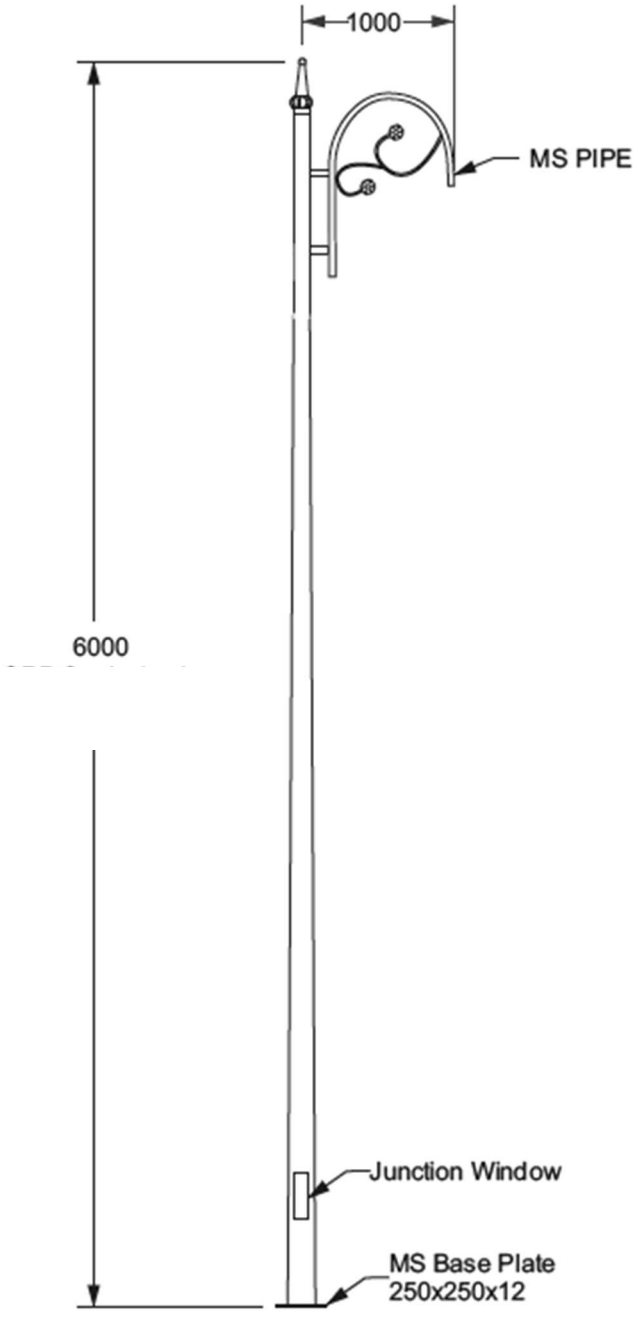

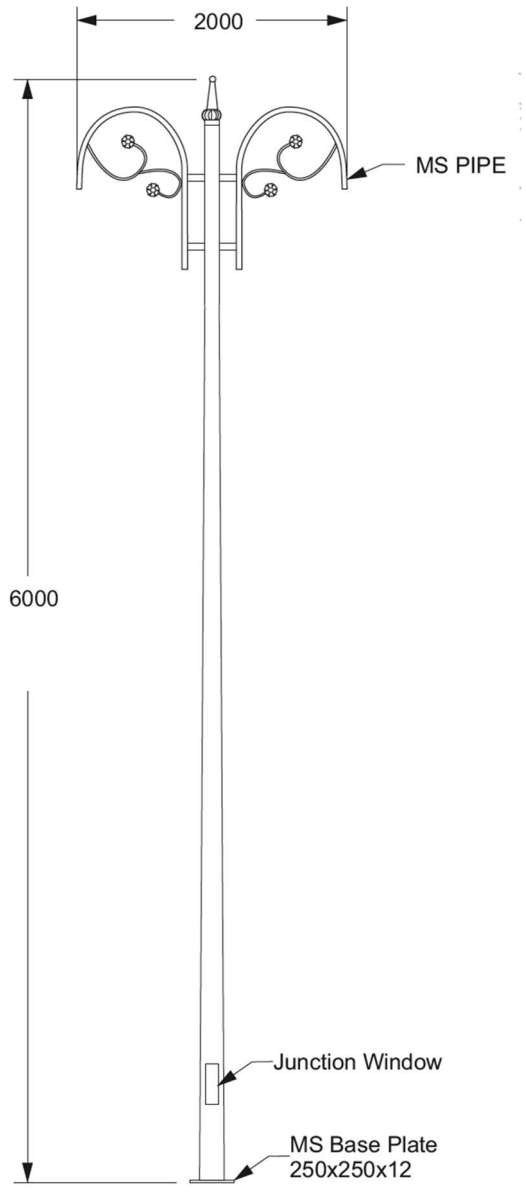
2000
MS PIPE
6000
Junction Window
MS Base Plate
250x250x12