BSES Yamuna Power Limited

NOTICE INVITING TENDER (NIT)

SUPPLY, INSTALLATION, TESTING & COMMISSIONING

OF

SCADA COMMUNICABLE FPI SYSTEM AT VARIOUS SUBSTATIONS IN BYPL

NIT NO: CMC/BY/25-26/RS/SkS/SV/15
[RFx Number: 2200000141]

Due Date for Submission: 25.09.2025, 15:00 HRS

BSES YAMUNA POWER LIMITED (BYPL)
CONTRACTS & MATERIALS DEPT.,
SHAKTI KIRAN BUILDING, KARKARDOOMA,
DELHI-110032
CIN: U40109DL2001PLC111525
WEBSITE: www.bsesdelhi.com

This document is a property of BYPL. This document is meant for the exclusive purpose of bidding against this NIT Number/Specification and shall not be transferred, reproduced, or otherwise used for purposes other than that for which it is specifically issued.

BSES Yamuna Power Limited

NIT INDEX

S No.	DOCUMENT DESCRIPTION	PAGE NO
VOLUME – I		
1	**INFORMATION TO BIDDER (ITB)**	1 To 17
1.00	**APPENDIX I**	1 To 22
1.01	BID INDEX FOR PART-A (TECHNICAL BID)	
1.02	BID FORM	
1.03	TENDER FEE DETAILS	
1.04	EMD DETAILS	
1.05	FORMAT FOR EMD BANK GUARANTEE	
1.06	COMMUNICATION DETAILS OF THE BIDDER	
1.07	MANUFACTURER AUTHORIZATION FORM	
1.08	QUALIFYING CRITERIA COMPLIANCE INDEX - TECHNICAL CRITERIA	
1.09	LIST OF PURCHASE ORDERS EXECUTED & DELIVERY DETAILS IN SUPPORT OF QUALIFYING REQUIREMENT	
1.10	LIST OF PERFORMANCE CERTIFICATES IN SUPPORT OF QUALIFYING REQUIREMENT	
1.11	SCHEDULE OF DEVIATIONS - TECHNICAL	
1.12	TYPE TEST REPORTS (SEQUENCE OF TESTS SHALL BE STRICTLY IN ACCORDANCE WITH RELEVANT IS/IEC)	
1.13	SAMPLE SUBMISSION DETAILS (IF APPLICABLE AS PER SPECIFICATION)	
1.14	QUALIFYING CRITERIA COMPLIANCE INDEX - COMMERCIAL CRITERIA	
1.15	UNDERTAKINGS	
1.16	SCHEDULE OF DEVIATIONS - COMMERCIAL	
1.17	ACCEPTANCE FORM FOR PARTICIPATION IN REVERSE AUCTION EVENT	
1.18	CODE OF CONDUCT FOR SUPPLIERS	
2	**GENERAL CONDITION OF CONTRACT**	1 To 27
2.00	**APPENDIX II**	1 To 6
2.01	FORMAT FOR PERFORMANCE BANK GUARANTEE	
2.02	BENEFICIARY'S BANK DETAILS WITH IFSC CODE	
2.03	FORMAT OF WARRANTY/GUARANTEE CERTIFICATE	
2.04	FORMAT OF UNDERTAKING GST	
2.05	SUMMARY OF COMMERCIAL TERMS AND CONDITIONS	
VOLUME – II - PRICE BID FORMAT		1 To 4
VOLUME – III - SOW & TECHNICAL SPECIFICATIONS		1 To 25

BSES

VOLUME – I: INFORMATION TO BIDDER (ITB)

BSES

SECTION – I: REQUEST FOR QUOTATION

1.00 EVENT INFORMATION

1.01 BSES Yamuna Power Ltd (hereinafter referred to as **"BYPL"**) invites **Open Tender** in the E-Tender Bidding Process on a "Single Stage: Two Parts" from interested Bidders as detailed below:

Tender Description	Tender Fee (₹)	Estimated Cost (₹)	EMD Amount (₹)	Delivery at
Survey, Design, Supply, Installation, Testing, Commissioning of Scada Communicable FPI System at various substations in BYPL	1,180	1.60 Crore	3.20 Lakh	Delhi Store(s)/ Site(s)

The bidder must qualify the requirements as specified in clause 2.0 stated below.

1.02 The tender document is available for downloading from our website www.bsesdelhi.com **--> BSES YAMUNA POWER LTD --> Tender --> Open Tenders** or through our E-Tendering portal link (https://srmprdportal.bsesdelhi.com/irj/portal).

1.03 **Tender Fee**: The bidder has to compulsorily submit the non-refundable tender fee of **₹ 1,180/-** as demand draft or online transfer of the requisite amount through IMPS/NEFT/RTGS covering the cost of bid documents. Any such bid submitted without this Fee shall be rejected.

1.04 **Earnest Money Deposit (EMD)** of ₹ 3,20,000/- (Three Lakh and Twenty Thousand only) valid for 120 days from the due date of bid submission in the form of BG/FD/online transfer of the requisite amount through IMPS/NEFT/RTGS. Any such bid submitted without EMD shall be rejected.

1.05 **TIME SCHEDULE**

The bidders should complete the following events within the dates specified as under:

S. No.	Events	Due date & Time
1	Date of availability of tender documents from BYPL Website & SRM	up to 25.09.2025, 15:00 Hours
2	Date & Time of Pre-Bid Meeting Pre-Bid Meeting will be done online, Register in advance for this meeting via, the Zoom Meeting link: https://zoom.us/j/96047897917?pwd=v3avvaaIVdgffwHRQUSxnPxC7l59I3.1 After registering, you will receive a confirmation email containing information about joining the meeting.	12.09.2025, 14:30 Hours
3	Last Date of receipt of pre-bid queries, if any (Queries to be submitted via e-mail)	12.09.2025 up to 18:00 Hours
4	Last Date of replies to all the pre-bid queries as received	16.09.2025 up to 17:00 Hours
5	Last date and time of receipt of Complete Bids (Tender Fees, EMD, Part A & Part B)	25.09.2025, 15:00HRS
6	Date & Time of Opening of PART A – EMD and Technical Bid	25.09.2025, 16:00HRS
7	Date & Time of opening of Price/RA of qualified bids	Will be notified to the qualified bidders through our website/e-mail

Note: In the event of the last date specified for submission of bids and the date of opening of bids is declared as a closed holiday for the BSES office, the last date of submission of bids and date of opening of bids will be the following working day at the appointed times.

1.06 The Bid shall be submitted online in two (02) parts. Details of the parts are as follows:
Part A – Techno Commercial Bid
Part B – Price Bid
Bids will be submitted online and received up to **25.09.2025, 15:00 Hr.** at the address given below.
Part A of the Bid shall be opened online on **25.09.2025, 16:00 Hr.**
Part B of the Bid will be opened in case of Techno-Commercially Qualified Bidders and the date of opening of same shall be intimated in due course. It is the sole responsibility of the bidder to ensure that the bid documents are submitted online and reach this office on or before the last date.

Head of Department
Contracts & Materials Deptt.
BSES Yamuna Power Ltd
Reception, Ground Floor
Shaktikiran Building, Karkardooma
Delhi 110032

All envelopes shall be duly superscribed "**Bid for Survey, Design, Supply, Installation, Testing, Commissioning of Scada Communicable FPI System at various substations in BYPL" "CMC/BY/25-26/RS/SkS/SV/15 [RFx No. 2200000141] DUE ON 25.09.2025, 15:00 Hr.**"

1.07 BSES Yamuna Power Ltd reserves the right to accept/reject any or all tenders without assigning any reason thereof in the event of the following:

a) Tender is received after the due date and time.
b) Tender fee of requisite value is not submitted.
c) Earnest Money Deposit (EMD) of requisite value & validity is not submitted in the shape of a Bank Guarantee drawn in favour of BSES Yamuna Power Ltd, payable at Delhi or Online transfer of requisite amount through IMPS/NEFT/RTGS.
d) Price Bid as per the Price Schedule is not submitted.
e) Incomplete Bids.
f) Necessary documents against compliance to Qualification Requirements mentioned in Section 1 Clause 2.0 of this Tender Document.
g) Complete documents/details are not enclosed as per the Bid Index for Part-A (Technical Bid) at APPENDIX I ANNEXURE – 1.01.
h) Filled in Schedule of Deviations as per Annexure is not submitted.

2.00 QUALIFICATION CRITERIA

The prospective bidder must qualify for all of the following requirements and shall be eligible to participate in the bidding who meets the following requirements and management has a right to disqualify those bidders who do not meet these requirements.

2.01 **Technical Criteria:**

S. No.	Criteria	Documents to be submitted by the bidder
1	The bidder should be the Original Equipment Manufacturer (OEM) of FRTU / FPI. BYPL reserves the right to inspect the bidder's	i. OEM Valid Certificate of Incorporation & Factory (Manufacturing) Licence or Self Undertaking.

	facility as proof of compliance with this parameter. Or The bidder shall be an authorized dealer/channel partner of OEM. If the Bidder is an authorized dealer/channel partner of OEM, a letter of authorization from OEM shall be submitted along with the bid. Also, such bidder shall submit a backup warranty from OEM along with bid on NIT terms and conditions.	ii. Authorization & backup warranty from OEM (If bidder is authorized dealer/ channel partner of OEM). (as per the format enclosed in APPENDIX I - ANNEXURE – 1.04) iii. Detailed list of manufacturing units, their locations, and the specific works from which supplies shall be made against this tender, submitted by the OEM.
2	The bidder should have successfully executed orders of at least 300 no's FPI/ FRTUs, within the last seven (7) years from the date of bid opening in Utility, SEB, PSU, Government organization.	i. Summary list of executed Purchase orders (Details to be submitted as per the format enclosed in APPENDIX I - ANNEXURE – 1.09) ii. Copies of the relevant Purchase Orders iii. Material delivery clearance certificate copy or Invoice Copies or Delivery completion/ Performance certificate
3	The bidder must provide at least one (1) performance certificates substantiating the satisfactory performance for FPI/ FRTU within the last seven (7) years from bid opening, issued by any Utility, SEB, PSU, Government organization. In case the bidder has previously supplied such products/services to BRPL/BYPL, performance feedback from BRPL/BYPL shall prevail and be considered final, irrespective of certificates from other organizations.	Performance Certificates (Details to be submitted as per the format enclosed in APPENDIX I - ANNEXURE – 1.10)
4	The bidder should have servicing, repairing, testing & refurbishment facility in Delhi-NCR with necessary spares and testing equipments for providing prompt after-sales service. In case of authorized channel partner undertaking from OEM is also required as a backup to provide after-sales services.	Relevant facility details/certificates/undertaking substantiating the infrastructure available, to be submitted along with a written undertaking confirming declared infrastructure
5	The bidder must possess valid ISO 9001:2015 certification.	Valid copy of Certification
In case the bidder is an authorized dealer/channel partner of OEM, then documents of OEM can be furnished by the bidder against above points no 1 to 5.		

2.02 **Commercial Criteria:**

S. No.	Criteria	Documents to be submitted by the bidder
6	The bidder must have an average annual sales turnover of not less than INR 5 Crore in the last three (3) financial years (i.e. FY 2022-23, 2023-24, and 2024-25).	i. Audited Balance Sheet and Profit & Loss Account Or ii. Duly certified CA certificate having UDIN to be submitted

		(Details to be submitted as per the format enclosed in APPENDIX I - ANNEXURE – 1.14)
7	The bidder must submit an undertaking stating that no litigation is pending with BYPL or any of its group/associate companies as of the date of bid opening.	Self-Undertaking (as per the format enclosed in APPENDIX I - ANNEXURE – 1.15) (Details to be submitted as per the format enclosed in APPENDIX I - ANNEXURE – 1.14)
8	The bidder must submit an undertaking (self-certification) that they have not been blacklisted or debarred by any Central / State Government Institution or Electricity Utility in India as of the date of bid opening.	Self-Undertaking (as per the format enclosed in APPENDIX I - ANNEXURE – 1.15) (Details to be submitted as per the format enclosed in APPENDIX I - ANNEXURE – 1.14)
9	The bidder must hold a valid PAN and GST Registration Number, and shall undertake to comply with all other applicable statutory laws and regulations prior to commencement of supply/work.	i. Copies of PAN and GST registration certificates ii. Self-undertaking confirming compliance with all statutory obligations (as per the format enclosed in APPENDIX I - ANNEXURE – 1.15) (Details to be submitted as per the format enclosed in APPENDIX I - ANNEXURE – 1.14)

Notwithstanding anything stated above, BYPL reserves the right to assess the bidder's capability to perform the contract, assess the capability and installed capacity of the Bidder for carrying out the supplies, should the circumstances warrant such assessment in the overall interest of the purchaser. In this regard the decision of the purchaser is final.

3.00 BIDDING AND AWARD PROCESS

Bidders are requested to submit their offer strictly in line with this tender document. Normally, the deviations to tender terms are not admissible and the bids with deviations are liable for rejection. Hence, the bidders are advised to refrain from taking any deviations on this Tender. Still, in case of any deviations, all such deviations shall be set out by the Bidders, clause by clause in the "Annexure - Schedule of Deviations" and the same shall be submitted as a part of the Technical Bid.

3.01 BID SUBMISSION

BIDS ARE INVITED THROUGH THE E-PROCUREMENT PORTAL:
BSES will carry out E-Procurement through its e-procurement portal (https://srmprdportal.bsesdelhi.com/irj/portal).

Interested Non-registered bidders are requested to obtain the portal user name and password (if not available) for bid submission. For participating in e-Tenders of BYPL, please write a mail to
1. Mr Rakesh Sharma, E-mail: Rakesh.Ku.Sharma@reliancegroupindia.com,
2. Mr Sumit Verma, E-mail: Sumit.Ra.Verma@@reliancegroupindia.com, with your details as per below:

a) Existing Vendor Code with BYPL or its Group/Associates Companies (if available): .....
b) Trade Name: .....
c) Address of Principal Place of Business: .....

d) Contact Person's Name: .....
e) Contact Person's Designation: .....
f) Contact Person's Mobile No.: .....
g) Contact Person's email ID: .....
h) Also, attach a valid copy of the Power of Attorney in favour of the above-mentioned Contact Person for being authorized to receive user ID and password on behalf of their organization.

The login ID details shall be sent through email to the email ID mentioned by you for the same.

Bids shall be submitted in 2 (Two) parts on the assigned folder of the e-procurement site. Please refer to the user manual available at https://srmprdportal.bsesdelhi.com/irj/portal and enclosed with the tender.

Bids have to be mandatorily submitted only through the e-procurement portal of BSES Delhi. Bids submitted through any other form/ route shall not be admissible.

However, documents that necessarily have to be submitted in originals like Tender Fee (in the form of DD) or EMD (in the form of BG/FD/DD as applicable) and any other documents mentioned in the tender documents have to be submitted at the BYPL office before the due date & time of submission.

Please mention our NIT Number: - ..... on the Tender and drop the same in our Tender Box placed at **BSES Yamuna Power Ltd, Reception, Ground Floor, Shaktikiran Building, Karkardooma, Delhi 110032**

The bids and the outer envelope shall be addressed to the following:
Head of Department
Contracts & Materials Deptt.
BSES Yamuna Power Ltd, Shaktikiran Building, Karkardooma, Delhi 110032
Kindly Note:

- The bidder has to ensure that the tender is dropped in the correct box designated for tender submission only.
- BYPL shall not be responsible for any wrong placement of tender documents by the bidder.

This is a two-part bid process. Bidders are to submit the bids online in 2(Two) parts **PART-A TECHNICAL BID & COMMERCIAL TERMS & CONDITIONS** and **Part-B FINANCIAL BID** and shall be submitted before the due date & time specified.

PART A:: TECHNICAL BID comprising of the following, do not contain any cost information whatsoever and shall be submitted within the due date:

S. No.	Descriptions	Type of Documents/Format
A.1	**Bid Details**	
1	**Bid Index for Part-A (Technical Bid)**	In the prescribed format enclosed at APPENDIX I ANNEXURE – 1.01
2	**Cover Letter, if any**	Standard Format
3	**Bid Form (Unpriced) Duly Signed**	Duly Signed Bid Form as per enclosed format at APPENDIX I ANNEXURE – 1.02
4	**Tender Fee**	Non-refundable demand draft or online transfer of the requisite amount through IMPS/NEFT/RTGS for Rs 1,180/-, Duly filled and signed as per enclosed format at APPENDIX I ANNEXURE – 1.03
5	**EMD**	Online transfer of the requisite amount through IMPS/NEFT/RTGS or FD or BG in the prescribed stamp

		paper & format enclosed at APPENDIX I ANNEXURE – 1.05, EMD Details Duly filled and signed as per enclosed format at APPENDIX I ANNEXURE – 1.04
6	**Power-of-Attorney/ Authorization Letter**	In the standard stamp paper/letter
A.2	**Technical Bid**	
7	**Communication Details of the Bidder**	Duly filled and signed as per enclosed format at APPENDIX I ANNEXURE – 1.06
8	**Manufacturer Authorization Form (as applicable)**	Duly filled and signed as per enclosed format at APPENDIX I ANNEXURE – 1.07s
9	**Technical Qualifying Criteria Compliance Index & Documents**	Documentary evidence in support of qualifying criteria mentioned in Section 1 Clause 2.00. Duly filled and signed as per enclosed format at APPENDIX I ANNEXURE – 1.08, ANNEXURE – 1.09 & ANNEXURE – 1.10
10	**Schedule of Deviations - Technical**	Duly filled and signed as per enclosed format at APPENDIX I ANNEXURE – 1.11
11	**Technical Details/ Filled in Guaranteed Technical particulars (GTP) as per specification**	Bidder shall submit duly filled GTP with all Technical documents
12	**Technical Drawings as per specification**	Bidder shall submit all Drawings as per the specification
13	**Type Test Reports**	Bidders shall submit a copy of type test reports in their technical bids in support of technical specifications. Duly filled and signed as per enclosed format at APPENDIX I ANNEXURE – 1.12
14	**Sample Submission Details (if applicable as per specification)**	Duly filled and signed as per enclosed format at APPENDIX I ANNEXURE – 1.13
15	**Product Catalogue (If applicable)**	Bidders shall submit a copy of the product catalogue in their technical bids in support of technical specifications
16	**Manufacturer's Quality Assurance Plan**	Bidders shall submit a copy of MQP in their technical bids in support of technical specifications
17	**Other drawings/ documents mentioned in technical specification**	Bidders shall submit a copy of documents in their technical bids in support of technical specifications
18	**Testing Facilities**	Bidder shall submit the details of testing facilities available at their works/factory.
A.3	**Commercial Bid**	
19	**Company Profile, Organization Chart & Manpower Details.**	Bidder shall submit the details of Organization & Manpower with qualification and experience.
20	**Commercial Qualifying Criteria Compliance Index & Documents**	Documentary evidence in support of qualifying criteria mentioned in Section 1 Clause 2.00. Duly filled and signed as per enclosed format at APPENDIX I ANNEXURE – 1.14
21	**Undertakings**	Duly signed self-undertakings as per enclosed format at APPENDIX I ANNEXURE – 1.15
22	**Schedule of Deviations - Commercial**	Duly filled and signed as per enclosed format at APPENDIX I ANNEXURE – 1.16

23	**Acceptance Form For Participation in Reverse Auction Event**	Duly signed Acceptance Form For Participation In Reverse Auction Event as per enclosed format at APPENDIX I ANNEXURE – 1.17
24	**Commercial Terms and Conditions**	Acceptance of Commercial Terms and Conditions viz. Delivery Schedule/Period, Payment terms, PBG etc. Duly filled and signed as per enclosed format at APPENDIX II ANNEXURE – 2.05
25	**Un price Bid Duly Signed**	Item wise marked as "Quoted" & Duly Signed Un price Bid as per enclosed format at VOLUME – II - PRICE BID FORMAT
26	**Signed Tender document**	Original Tender documents duly stamped & signed on each page as a token of acceptance

PART B:: FINANCIAL BID comprising of

- Price strictly in the Format enclosed at VOLUME – II - PRICE BID FORMAT indicating Break up of basic price, taxes & duties, etc.
- The Bidder has to submit the item-wise price bifurcation in the bid. An unpriced copy must be attached with the Part A (Technical Bid).

This will be opened internally after techno-commercial evaluation and only of the qualified bidders.

REVERSE AUCTION CLAUSE:: Purchaser reserves the right to use the reverse auction as an optional tool through SAP-SRM as an integral part of the entire tendering process. All techno-commercially qualified bidders shall participate in the reverse auction. Reverse Auction will be carried out on individual item-wise rates or Package-wise.
Notwithstanding anything stated above, the Purchaser reserves the right to assess the bidder's capability to perform the contract, should the circumstances warrant such assessment in the overall interest of the purchaser. In this regard the decision of the purchaser is final. Bidder is to submit their acceptance as per the format APPENDIX I ANNEXURE – 1.17.

BIDS RECEIVED AFTER THE DUE DATE AND TIME MAY BE LIABLE FOR REJECTION

4.00 AWARD DECISION

4.01 Purchaser intends to award the business on the lowest bid basis, so suppliers are encouraged to submit the bid competitively. The decision to place a LOI/Purchase Order solely depends on the purchaser on the cost competitiveness across multiple lots, quality, delivery and bidder's capacity, in addition to other factors that Purchaser may deem relevant.

4.02 In the event of your bid being selected by the purchaser (and/or its affiliates) and you subsequent DEFAULT on your bid; you will be required to pay the purchaser (and/or its affiliates) an amount equal to the difference in your bid and the next lowest bid on the quantity declared in NIT/RFQ.

4.03 In case any supplier is found unsatisfactory during the delivery process, the award may be cancelled and BYPL reserves the right to award other suppliers who are found fit.

4.04 Rate shall remain FIRM till the validity of the Contract.

4.05 Quantity Variation: The purchaser reserves the right to vary the quantity by (±) 30% of the tender quantity during the execution of the contract.

4.06 Quantity Splitting: The purchaser reserves the right to distribute the procurable quantity on one or more than one of the eligible tenders. If the quantity is to be split, quantity distribution shall be in the manner detailed below:
a) If the quantity is split among 2 bidders, it will be done at 70:30 on the L1 price.
b) If the quantity is split among 3 bidders, it will be done at 50:30:20 on the L1 price.
Note: If quantity needs to be distributed and order splitting is required, quantity distribution shall be maximum among three (3) bidders.

5.00 MARKET INTEGRITY

We have a fair and competitive marketplace. The rules for bidders are outlined in the Terms & Conditions. Bidders must agree to these rules before participating. In addition to other remedies available, we reserve the right to exclude a bidder from participating in future markets due to the bidder's violation of any of the rules or obligations contained in the Terms & Conditions. Bidders who violate the marketplace rules or engage in behaviour that disrupts the fair execution of the marketplace restrict a bidder to the length of time, depending upon the seriousness of the violation. Examples of violations include, but are not limited to:

- Failure to honour prices submitted to the marketplace.
- Breach of the terms of the published in Request for Quotation/NIT.

6.00 SUPPLIER CONFIDENTIALITY

All information contained in this RFQ is confidential and shall not be disclosed, published or advertised in any manner without written authorization from BYPL. This includes all bidding information submitted.

All RFQ documents remain the property of BYPL and all suppliers are required to return these documents to BYPL upon request.

Suppliers who do not honour these confidentiality provisions will be excluded from participating in future bidding events.

7.00 CONTACT INFORMATION

Technical clarification, if any, as regards this RFQ shall be sought in writing and sent by e-mail/post/courier to the following addresses. The same shall not be communicated through phone

Address	Name/ Designation	E-mail Address
Technical		
CES Dept. 3rd Floor, B-Block, BSES Yamuna Power Ltd Shaktikiran Building, Karkardooma, Delhi 110032	Ashish Joshi GM (CES)	Ashish.K.Joshi@reliancegroupindia.com
	Puneet.Duggal GM (CES)	Puneet.Duggal@reliancegroupindia.com
	Gaurav Sharma Addl. VP (HOD-CES)	Gaurav.A.Sharma@reliancegroupindia.com
Commercial		
C&M Dept. 3rd Floor, A-Block, BSES Yamuna Power Ltd Shaktikiran Building, Karkardooma, Delhi 110032	Sumit Verma GM (C&M)	Sumit.Ra.Verma@reliancegroupindia.com
	Santosh Singh Addl. VP (Head-Procurement)	Santosh.Kum.Singh@reliancegroupindia.com
	Robin Sebastian VP (HOD-C&M)	Robin.Sebastian@reliancegroupindia.com

SECTION – II: INSTRUCTION TO BIDDERS

A. GENERAL

1.00 BSES Yamuna Power Ltd, hereinafter referred to as "The Purchaser" is desirous of implementing the various Systems Improvement/Repair & Maintenance works at their respective licensed area in Delhi The Purchaser has now floated this tender for procurement of material notified earlier in this bid document.

2.00 SCOPE OF WORK

The scope shall include Design, Manufacture, testing at works conforming to the Technical Specifications/IS along with Packing, Forwarding, Transportation and Unloading and proper stacking at Purchaser's stores/site, erection & installation, commissioning, handing over to "on turnkey basis".

3.0 DISCLAIMER

3.01 This Document includes statements, which reflect various assumptions, which may or may not be correct. Each Bidder/Bidding Consortium should conduct its estimation and analysis and should check the accuracy, reliability and completeness of the information in this Document and obtain independent advice from appropriate sources in their interest.

3.02 Neither Purchaser nor its employees will have any liability whatsoever to any Bidder or any other person under the law or contract, the principles of restitution or unjust enrichment or otherwise for any loss, expense or damage whatsoever which may arise from or be incurred or suffered in connection with anything contained in this document, any matter deemed to form part of this Document, provision of Services and any other information supplied by or on behalf of Purchaser or its employees, or otherwise a rising in any way from the selection process for the Supply.

3.03 Though adequate care has been taken while issuing the Bid document, the Bidder should satisfy itself that the Documents are complete in all respects. Intimation of any discrepancy shall be given to this office immediately.

3.04 This Document and the information contained herein are Strictly Confidential and are for the use of only the person(s) to whom it is issued. It may not be copied or distributed by the recipient to third parties (other than in confidence to the recipient's professional advisors).

4 COST OF BIDDING

The Bidder shall bear all costs associated with the preparation and submission of its Bid and the Purchaser will in no case be responsible or liable for those costs.

B. BIDDING DOCUMENTS

5.01 The Scope of Work, Bidding Procedures and Contract Terms are described in the Bidding Documents.

5.02 The Bidder is expected to examine the Bidding Documents, including all Instructions, Forms, Terms and Specifications. Failure to furnish all information required by the Bidding Documents or submission of a Bid not substantially responsive to the Bidding Documents in every respect may result in the rejection of the Bid.

6.0 **AMENDMENT OF BIDDING DOCUMENTS**

6.01 At any time before the deadline for submission of Bids, the Purchaser may for any reason, whether at its initiative or in response to a clarification requested by a prospective Bidder, modify the Bidding Documents by Amendment.

6.02 The Amendment shall be part of the Bidding Documents, pursuant to Clause 5.01, and it will be notified on the website **www.bsesdelhi.com** and the same will be binding on them.

6.03 To afford prospective Bidders reasonable time in which to take the Amendment into account in preparing their Bids, the Purchaser may, at its discretion, extend the deadline for the submission of Bids. The same shall be published as a corrigendum on the website **www.bsesdelhi.com**

6.04 Purchaser shall reserve the rights to the following:
a) Extend the due date of submission,
b) Modify the tender document in part/whole,
c) Cancel the entire tender

6.05 **Bidders are requested to visit the website regularly for any modification/clarification/corrigendum/addendum of the bid documents.**

C. PREPARATION OF BIDS

7.0 **LANGUAGE OF BID**

The Bid prepared by the Bidder, and all correspondence and documents relating to the Bid exchanged by the Bidder and the Purchaser, shall be written in the English Language. Any printed literature furnished by the Bidder may be written in another language, provided that this literature is accompanied by an English translation, in which case, for purposes of interpretation of the Bid, the English translation shall govern.

8.0 **DOCUMENTS COMPRISING THE BID**

The Bid prepared and submitted by the Bidder shall comprise the following components:

(a) All the Bids must be accompanied by the required Tender Fees and EMD as mentioned in the tender.

(b) PART A – Technical Bid and

(c) PART B - Financial Bid

9.0 **BID FORM**

9.01 The Bidder shall submit Bid Form with the Bidding Documents.

9.02 **EMD**

Pursuant to Clause 8.0(a) above, the bidder shall furnish, as part of its bid, an EMD amounting to as specified in Section I. The EMD is required to protect the Purchaser against the risk of Bidder's conduct which will warrant forfeiture.
The EMD shall be denominated in any of the following forms**:**
(a) Bank Guarantee drawn in favour of BSES Yamuna Power Ltd, payable at Delhi or
(b) Fixed Deposit (lien marked in favour of BSES Yamuna Power Limited) payable at Delhi.

(c) Online transfer of requisite amount through IMPS/NEFT/RTGS to BYPL account mentioned herein in **Appendix II - <u>BYPL BANK DETAILS WITH IFSC CODE</u>**.

EMD shall be valid for One Hundred Twenty (120) days after the due date of submission drawn in favour of BSES Yamuna Power Ltd.

The EMD may be forfeited in the case of:

(a) the Bidder withdraws its bid during the period of specified bid validity

or

(b) the case of a successful Bidder, if the Bidder does not

(i) Accept the Purchase Order, or

(ii) Furnish the required performance security BG.

10.0 **BID PRICES**

10.01 Bidders shall quote for the entire Scope of Supply/Work with a break-up of prices for individual items. The total Bid Price shall also cover all the Supplier's obligations mentioned in or reasonably to be inferred from the Bidding Documents in respect of Design, Supply, and Transportation to the site, all in accordance with the requirement of the Bidding Documents. The Bidder shall complete the appropriate Price Schedules included herein, stating the Unit Price for each item & total Price.

10.02 The prices offered shall be inclusive of all costs as well as Duties, Taxes or Levies paid or payable during the execution of the supply work, a breakup of price constituents, should be there.

10.03 Prices quoted by the Bidder shall be **"Firm"** and not subject to any price adjustment during the performance of the Contract. **A Bid submitted with an adjustable price/ Price Variation Clause will be treated as non-responsive and rejected.**

11.0 **BID CURRENCIES**

11.01 Prices shall be quoted in Indian Rupees Only.

12.0 **PERIOD OF VALIDITY OF BIDS**

12.01 Bids shall remain valid for 120 days from the due date of submission of the Bid.

12.02 Notwithstanding Clause 12.01 above, the Purchaser may solicit the Bidder's consent to an extension of the Period of Bid Validity. The request and the responses thereto shall be made in writing and sent by post/courier.

13.0 **ALTERNATIVE BIDS**

13.01 Bidders shall submit Bids, which comply with the Bidding Documents. Alternative Bids will not be considered. The attention of Bidders is drawn to the provisions regarding the rejection of Bids in the terms and conditions, which are not substantially responsive to the requirements of the Bidding Documents.

14.0 **FORMAT AND SIGNING OF BID**

14.01 The original Bid Form and accompanying documents, must be received by the Purchaser at the date, time and place specified pursuant to Clauses 15.0 and 16.0.

14.02 The original Bid shall be typed or written in indelible ink and shall be signed by the Bidder or a person or persons duly authorized to sign on behalf of the Bidder. Such authorization shall be indicated by written Power-of-Attorney accompanying the Bid. The Bid submitted on behalf of companies registered with the Indian Companies Act, for the time being in force, shall be signed by persons duly authorized to submit the Bid on behalf of the Company and shall be accompanied by certified true copies of the resolutions, extracts of Articles of Association, special or general Power of Attorney etc. to show clearly the title, authority and designation of persons signing the Bid on behalf of the Company. Satisfactory evidence of the authority of the person signing on behalf of the Bidder shall be furnished with the bid. A bid by a person who affixes to his signature the words 'President', 'Managing Director', 'Secretary', 'Agent' or other designations without disclosing his principal will be rejected.

The Bidder's name stated on the Proposal shall be the exact legal name of the firm.

14.03 The Bid shall contain no interlineations, erasures or overwriting except as necessary to correct errors made by the Bidder, in which case such corrections shall be initiated by the person or persons signing the Bid.

D. SUBMISSION OF BIDS

15.0 **SEALING AND MARKING OF BIDS**

15.01 Bid submission: Bids have to be mandatorily submitted only through the e-procurement portal of BSES Delhi. Bids submitted through any other form/ route shall not be admissible.

15.02 However, documents that necessarily have to be submitted in originals like EMD or Tender Fee (in the form of BG/ DD /FD as applicable) and any other documents mentioned in the tender documents have to be submitted at the BYPL office before the due date & time of submission. The Technical Documents and the EMD shall be enclosed in a sealed envelope and the said envelope shall be superscribed with - "Technical Bid & EMD". All the envelopes should bear the Name and Address of the Bidder and mark for the Original. The envelopes should be superscribed with - "Tender No. & Due date of opening".

15.03 The Bidder has the option of sending the Bids in person. Bids submitted by Email/Telex/Telegram /Fax will be rejected. No request from any Bidder to the Purchaser to collect the proposals from Courier/Airlines/Cargo Agents etc. shall be entertained by the Purchaser.

16.0 **DEADLINE FOR SUBMISSION OF BIDS**

16.01 The Bid must be received by the Purchaser on or before the due date & time of submission.

16.02 The Purchaser may, at its discretion, extend the deadline for the submission of Bids by amending the Bidding Documents in accordance with Clause 6.0, in which case all rights and obligations of the Purchaser and Bidders previously subject to the deadline will thereafter be subject to the deadline as extended.

17.0 **ONE BID PER BIDDER**

17.01 Each Bidder shall submit only one Bid by itself. No Joint venture is acceptable. A Bidder who submits

or participates in more than one Bid will cause all those Bids to be rejected.

18.0 **LATE BIDS**

18.01 No Bid will be received by the Purchaser after the deadline for submission of Bids prescribed by the Purchaser, pursuant to Clause 16.0.

19.0 **MODIFICATIONS AND WITHDRAWAL OF BIDS**

19.01 The Bidder is not allowed to modify or withdraw its Bid after the Bid's due date & time of submission subject to any corrigendum/addendum/modifications in the tender documents uploaded to the website.

E. EVALUATION OF BID

20.0 **PROCESS TO BE CONFIDENTIAL**

Information relating to the examination, clarification, evaluation and comparison of Bids and recommendations for the award of a contract shall not be disclosed to Bidders or any other persons not officially concerned with such process. Any effort by a Bidder to influence the Purchaser's processing of Bids or award decisions may result in the rejection of the Bidder's Bid.

21.0 **CLARIFICATION OF BIDS**

To assist in the examination, evaluation and comparison of Bids, the Purchaser may, at its discretion, ask the Bidder for a clarification of its Bid. All responses to requests for clarification shall be in writing and no change in the price or substance of the Bid shall be sought, offered or permitted.

22.0 **PRELIMINARY EXAMINATION OF BIDS / RESPONSIVENESS**

22.01 Purchaser will examine the Bids to determine whether they are complete, whether any computational errors have been made, whether required sureties have been furnished, whether the documents have been properly signed and whether the Bids are generally in order. Purchaser may ask for submission of original documents to verify the documents submitted in support of qualification criteria.

22.02 Arithmetical errors will be rectified on the following basis. If there is a discrepancy between the unit price and the total price per item that is obtained by multiplying the unit price and quantity, the unit price shall prevail and the total price per item will be corrected. If there is a discrepancy between the Total Amount and the sum of the total price per item, the sum of the total price per item shall prevail and the Total Amount will be corrected.

22.03 Prior to the detailed evaluation, Purchaser will determine the substantial responsiveness of each Bid to the Bidding Documents including production capability and acceptable quality of the Goods offered. A substantially responsive Bid is one, which conforms to all the terms and conditions of the Bidding Documents without material deviation.

22.04 Bid determined as not substantially responsive will be rejected by the Purchaser and/or the Purchaser and may not subsequently be made responsive by the Bidder by correction of the non-conformity.

23.0 **EVALUATION AND COMPARISON OF BIDS**

23.01 The evaluation of Bids shall be done based on the delivered cost competitiveness basis.

23.02 The evaluation of the Bids shall be a stage-wise procedure. The following stages are identified for evaluation purposes: In the first stage, the Bids will be subjected to a responsiveness check. The Technical & qualifying Proposals and the Conditional ties of the Bidders will be evaluated.

Subsequently, the Financial Proposals along with Supplementary Financial Proposals, if any, of Bidders with Techno-commercially Acceptable Bids shall be considered for final evaluation.

23.03 The Purchaser's evaluation of a Bid will take into account, in addition to the Bid price, the following factors, in the manner and to the extent indicated in this Clause:

(a) Delivery Schedule

(b) Conformance to Qualifying Criteria

(c) Deviations from Bidding Documents

Bidders shall base their Bid price on the terms and conditions specified in the Bidding Documents.

The cost of all quantifiable deviations and omissions from the specification, terms and conditions specified in the Bidding Documents shall be evaluated. **The Purchaser will make its own assessment of the cost of any deviation to ensure a fair comparison of Bids.**

23.04 Any price adjustments that result from the above procedures shall be added for comparative evaluation only to arrive at an "Evaluated Bid Price". Bid Prices quoted by Bidders shall remain unaltered.

F. AWARD OF CONTRACT

24.0 CONTACTING THE PURCHASER

24.01 If any Bidder wishes to contact the Purchaser on any matter related to the Bid, from the time of Bid opening to the time of contract award, the same shall be done in writing only.

24.02 Any effort by a Bidder to influence the Purchaser and/or in the Purchaser's decisions in respect of Bid evaluation, Bid comparison or Contract Award, will result in the rejection of the Bidder's Bid.

25.0 THE PURCHASER'S RIGHT TO ACCEPT ANY BID AND TO REJECT ANY OR ALL BIDS

Submission of bids shall not automatically construe qualification for evaluation. The Purchaser reserves the right to accept or reject any Bid and to annul the Bidding process and reject all Bids at any time prior to the award of the Contract, without thereby incurring any liability to the affected Bidder or Bidders or any obligation to inform the affected Bidder or Bidders of the grounds for the Purchaser's action.

26.0 AWARD OF CONTRACT

The Purchaser will award the Contract to the successful Bidder whose Bid has been Determined to be the lowest-evaluated responsive Bid, provided further that the Bidder has been determined to be qualified to satisfactorily perform the Contract. Purchaser reserves the right to award the order to other bidders in the tender, provided it is required for the timely execution of the project & provided he agrees to come to the lowest rate. Purchaser reserves the right to distribute the entire tender quantity at its own discretion without citing any reasons thereof.

27.0 **THE PURCHASER'S RIGHT TO VARY QUANTITIES**

The Purchaser reserves the right to vary the quantity i.e. increase or decrease the numbers/quantities without any change in terms and conditions during the execution of the Order.

28.0 **LETTER OF INTENT/ NOTIFICATION OF AWARD**

The letter of intent/ Notification of Award shall be issued to the successful Bidder whose bids have been considered responsive, techno-commercially acceptable and evaluated to be the lowest (L1). The successful Bidder shall be required to furnish a letter of acceptance within 7 days of the issue of the letter of intent /Notification of Award by Purchaser.

29.0 **PERFORMANCE BANK GUARANTEE (PBG)**

To be submitted within twenty-eight (28) days from the date of issuance of the Letter of Intent/Award/PO. Bidder shall submit PBG equivalent to 10% of the PO value (including GST) valid for a period of 30 months from the date of last receipts at site/stores plus 3 months claim period.

30.0 **CORRUPT OR FRAUDULENT PRACTICES**

30.01 The Purchaser requires that the Bidders observe the highest standard of ethics during the procurement and execution of the Project. In pursuance of this policy, the Purchaser:

(a) Defines, for this provision, the terms set forth below as follows:

(i) "Corrupt practice" means behaviour on the part of officials in the public or private sectors by which they improperly and unlawfully enrich themselves and/or those close to them, or induce others to do so, by misusing the position in which they are placed, and it includes the offering, giving, receiving, or soliciting of anything of value to influence the action of any such official in the procurement process or contract execution; and

(ii) "Fraudulent practice" means a misrepresentation of facts to influence a procurement process or the execution of a contract to the detriment of the Purchaser, and includes collusive practice among Bidders (before or after Bid submission) designed to establish Bid prices at artificial non -competitive levels and to deprive the Purchaser of the benefits of free and open competition.

(b) Will reject a proposal for award if it determines that the Bidder recommended for award has engaged in corrupt or fraudulent practices in competing for the contract in question;

(c) Will declare a firm ineligible, either indefinitely or for a stated period, to be awarded a contract if it at any time determines that the firm has engaged in corrupt or fraudulent practices in competing for, or in executing a contract.

30.02 Furthermore, Bidders shall be aware of the provision stated in the Terms and Conditions of the Contract.

31.0 **STATUTORY GUIDELINES & REGULATIONS**

The bidder shall make himself fully aware & familiarize himself with all applicable laws/guidelines/regulations.

32.0 **SAFETY**

Safety related requirements as mentioned in our safety Manual put on the Company's website which can be accessed at http://www.bsesdelhi.com. All bidders shall strictly abide by the guidelines provided in the safety manual at all relevant stages during the contract period.

33.0 **PRIORITY OF CONTRACT DOCUMENTS**

The several documents forming the Agreement are to be taken as mutually explanatory of one another, but in case of ambiguities or discrepancies, the same shall be explained and adjusted by the company, who shall, accordingly, issue suitable instructions thereon to the Contractor. In such event, unless otherwise provided in the agreement or explained by way of instructions by the company, as mentioned above, the priority of the documents forming the Agreement shall be as follows:

i) Contract Agreement/Purchase Order.
(a)Special Conditions of Contract
(b)General Conditions of Contract
(ii)The Letter of Acceptance/ Intent
(iii)Agreed Minutes of the Tender Negotiation Meetings
(iv) Agreed Minutes of the Tender Technical Meetings
(v) The Priced Bill of Quantities
(vi)The Technical Specifications / Scope of work
(vii)The Tender document, including all Appendices and/or Addenda, Corrigendum the latest taking precedence.

In the event of any conflict between the above-mentioned documents, the more stringent requirement or conditions which shall be favourable to the company shall govern and the decision of the company/BYPL shall be final and binding upon the parties.

BSES

APPENDIX I ANNEXURE – 1.01

BID INDEX FOR PART-A (TECHNICAL BID)

(To be filled & submitted on Bidder Letter Head, Bidders document submission should have following main categories as outlined below and should have page numbers printed at the bottom of each page with this page as page number 1. The page number should be in "Page X of Y" format. Separator with document description shall be provided before each document)

NIT & RFX No.:
Bidder's Name:
Bidder's Bid Reference No. & Date:

S. No.	Particulars	Bid Pdf Page No.	
		From	To
A.1	**Bid Details**		
1.	Bid Index for Part-A (Technical Bid) as per APPENDIX I ANNEXURE - 1.01	1	
2.	Cover Letter, If any		
3.	Bid Form (Unpriced) Duly Signed as per APPENDIX I ANNEXURE - 1.02		
4.	Tender Fee Details as per APPENDIX I ANNEXURE - 1.03		
5.	EMD Details as per APPENDIX I ANNEXURE - 1.04 & 1.05		
6.	Power-of-Attorney / Authorization Letter		
A.2	**Technical Bid**		
7.	Communication Details of the Bidder as per APPENDIX I ANNEXURE - 1.06		
8.	Manufacturer Authorization Form (as applicable) as per APPENDIX I ANNEXURE - 1.07		
9.	Technical Qualifying Criteria Compliance Index & Documents as per APPENDIX I ANNEXURE - 1.08, 1.09, 1.10		
10.	Schedule of Technical Deviations (along with soft editable Excel copy) as per APPENDIX I ANNEXURE - 1.11		
11.	Guaranteed Technical particulars (GTP) as per specification		
12.	All Drawings as per specification		
13.	Type Test Reports (Sequence of Tests shall be strictly in accordance with relevant IS/IEC) as per APPENDIX I ANNEXURE - 1.12		
14.	Sample Submission Details (If applicable as per Specification) as per APPENDIX I ANNEXURE - 1.13		
15.	Product Catalogue (If applicable)		
16.	Manufacturer's quality assurance plan (as applicable)		
17.	Other drawings/ documents mentioned in technical specification		
18.	Testing Facilities		
A.3	**Commercial Bid**		
19.	Company Profile/Organogram/Organization Chart & Manpower Details		
20.	Commercial Qualifying Criteria Compliance Index & Documents as per APPENDIX I ANNEXURE - 1.14		
21.	Undertakings as per APPENDIX I ANNEXURE - 1.15		
22.	Schedule of Commercial Deviations (along with soft editable Excel copy) as per APPENDIX I ANNEXURE - 1.16		
21.	Acceptance form for participation in reverse auction event as per APPENDIX I ANNEXURE - 1.17		
24.	Acceptance of Commercial Terms and Conditions as per APPENDIX II ANNEXURE - 2.05		
25.	Un Price Bid Duly Signed (Volume - II Price Bid Format)		
26.	NIT Document complete Signed & Stamped		

ANNEXURE – 1.02

BID FORM

To

Head of Department
Contracts & Material Deptt.
BSES Yamuna Power Ltd
Shaktikiran Building, Karkardooma,
Delhi 110032

Sir,

1. We understand that BYPL is desirous of procuring…….
   for it's licensed distribution network area in Delhi.
2. Having examined the Bidding Documents for the above-named works, we the undersigned, offer to deliver the goods in full conformity with the Terms and Conditions and technical specifications for the sum indicated in the Price Bid or such other sums as may be determined in accordance with the terms and conditions of the contract. The amounts are in accordance with the Price Schedules attached herewith and are made part of this bid.
3. If our Bid is accepted, we undertake to deliver the entire goods as per the delivery schedule mentioned in Section IV from the date of award of the purchase order/letter of intent.
4. If our Bid is accepted, we will furnish a performance bank guarantee for due performance of the Contract in accordance with the Terms and Conditions.
5. We agree to abide by this Bid for 120 days from the due date of bid submission and it shall remain binding upon us and may be accepted at any time before the expiration of that period.
6. We declare that we have studied the provision of Indian Laws for the supply/services of equipments/materials and the prices have been quoted accordingly.
7. Unless and until Letter of Intent is issued, this Bid, together with your written acceptance thereof, shall constitute a binding contract between us.
8. We understand that you are not bound to accept the lowest or any bid you may receive.
9. There is provision for Resolution of Disputes under this Contract, by the Laws and Jurisdiction of Contract.

Dated this..... day of..... 20XX

Signature..... In the capacity of ……

.....duly authorized to sign for and on behalf of

(IN BLOCK CAPITALS) .....

ANNEXURE – 1.03

TENDER FEE DETAILS

a. Amount (Rs.) : **1,180/- (One Thousand One Hundred Eighty Only)**

b. Mode of Payment : DD or online transfer through IMPS/NEFT/RTGS (select any one)

c. DD /UTR No. (As applicable) : .....

d. Dated : .....

e. Bidders Bank Account No. : .....

f. Name of the Bank : .....

g. Address of the Bank : .....

h. IFSC Code of the Bank : .....

BSES

ANNEXURE – 1.04

EMD DETAILS

a. EMD Amount (Rs.) : ……

b. Mode of Payment : BG/FD/online transfer through IMPS/NEFT/RTGS (select any one)

c. BG/FD/UTR No. (As applicable): ……

d. Dated : ……

e. BG valid up to : ……

f. BG Claim period up to : ……

g. Bidders Bank Account No. : ……

h. Name of the Bank : ……

i. Address of the Bank : ……

j. IFSC Code of the Bank : ……

BSES

ANNEXURE – 1.05

(FORMAT FOR EMD BANK GUARANTEE)

(To be issued in a Non-Judicial Stamp Paper of Rs.50/-purchased in the name of the bank)

Whereas [*name of the Bidder*] (hereinafter called the "Bidder") has submitted its bid dated [*date of submission of bid*] for the supply of [*name and/or description of the goods*] (hereafter called the "Bid").

KNOW ALL PEOPLE by these presents that WE [name of bank] at [*Branch Name and address*], having our registered office at [*address of the registered office of the bank*] (hereinafter called the "Bank"), are bound unto BSES Yamuna Power Ltd., with its Corporate Office at Shaktikiran Building, Karkardooma, Delhi - 110032, (hereinafter called - the "Purchaser") in the sum of Rs…… (Rupees…….. only) for which payment well and truly to be made to the said Purchaser, the Bank binds itself, its successors, and assigns by these presents.

Sealed with the Common Seal of the said Bank this_____ day of_____ 20____.

The conditions of this obligation are:

1 If the Bidder withdraws its Bid during the period of bid validity specified by the Bidder on the Bid Form; or

2. If the Bidder, having been notified of the acceptance of its Bid by the Purchaser during the period of bid validity:

(a) fails or refuses to execute the Contract Form, if required; or

(b) fails or refuses to furnish performance security, In accordance with the Instructions to Bidders/Terms and Conditions;

We undertake to pay to the Purchaser up to the above amount upon receipt of its first written demand, without the Purchaser having to substantiate its demand, provided that is its demand the purchaser will note that amount claimed by it is due to it, owing to the occurrence of one or both of the two condition(s), specifying the occurred condition or condition(s).

This guarantee will remain in force up to and including One Hundred Twenty (120) days after the due date of submission bid, and any demand in respect thereof should reach the Bank not later than the above date.

(Stamp & signature of the bank)

Signature of the witness

ANNEXURE – 1.06

COMMUNICATION DETAILS OF THE BIDDER

S. No.	Designation	Name	Mobile No.	E-mail id
1	CEO / MD			
2	Sales / Marketing Head			
3	Sales Representative / Key Account Manager (KAM)			
4	Technical Head			
5	Manufacturer Plant / Operations Head			
6	Post Order Execution In Charge			
7	Authorized contact person (Primary responsibility for the Bid)			
8	Authorized contact person (Secondary responsibility for the Bid)			

BSES

ANNEXURE – 1.07

MANUFACTURER AUTHORIZATION FORM
(To be submitted on OEM's Letter Head)

Date: …….
Tender No.: ……..

To

Head of Department
Contracts & Material Deptt.
BSES Yamuna Power Ltd
Shaktikiran Building, Karkardooma,
Delhi 110032

Sir,

WHEREAS M/s. *[name of OEM]*, who are official manufacturers of …… having factories at *[address of OEM]* do hereby authorize M/s *[name of bidder]* to submit a Bid in relation to the Invitation for Bids indicated above, the purpose of which is to provide the following Goods, manufactured by us ……and to subsequently negotiate and sign the Contract.

We hereby extend our full guarantee and warranty by the Conditions of the Contract or as mentioned elsewhere in the Tender Document, concerning the Goods offered by the above firm in reply to this Invitation for Bids.

We hereby confirm that in case, the channel partner fails to provide the necessary services as per the Tender Document referred above, M/s *[name of OEM]* shall provide standard warranty on the materials supplied against the contract. The warranty period and inclusion/exclusion of parts in the warranty shall remain the same as defined in the contract issued to our channel partner against this tender.

Yours Sincerely,
For …….

Authorized Signatory

ANNEXURE – 1.08

QUALIFYING CRITERIA COMPLIANCE INDEX - TECHNICAL CRITERIA				
S No	**Qualifying Criteria Description as per section 1 clause 2.00**	**Documentary Proof Description**	**Documentary Proof Enclosed on Bid Page No.**	
			From	**To**
1				
2				
3				
4				
5				

BSES

ANNEXURE – 1.09

LIST OF PURCHASE ORDERS EXECUTED & DELIVERY DETAILS IN SUPPORT OF QUALIFYING REQUIREMENTS													
S No	Item Details				PO & Execution Details					Customer Name	End User (shall be Utility/ SEB's/ PSU's) name and details	PO copy, MDCC /Delivery completion certificates/ Invoice Copies enclosed on Bid Page no.	
	Item	Model	Voltage Rating (kV)	Current Rating (A)	PO No	PO Date	PO Qty	Executed Qty	Execution Year			From	To
Total							∑	∑					

Note – Only items relevant as per qualifying requirements should be included in the list.

BSES

ANNEXURE – 1.10

LIST OF PERFORMANCE CERTIFICATES IN SUPPORT OF QUALIFYING REQUIREMENT														
S No	Item Details				PO No	Supplied/ Commissioning		Performance Certificate Issue Date	Performance Certificate Issued By End User (Utility/SEB/Govt Org.)	Contact Details of Issuing Person			Enclosed on Bid Page No.	
	Item	Model	Voltage Rating (kV)	Current Rating (A)		Qty.	Date			Name	Email	Mobile	From	To
Total						∑								

Note –

1. **Only items relevant as per qualifying requirement should be included in the list.**
2. **Only Performance certificates issued by End User (utilities/ SEB's/PSU's only) will be accepted as per qualifying requirement.**

BSES

ANNEXURE – 1.11

SCHEDULE OF DEVIATIONS - TECHNICAL

Vendor shall refrain from taking any deviations on this TENDER. Still, in case of any deviations, all such deviations from this tender shall be set out by the Bidder, Clause by Clause in this schedule and submit the same as a part of the Technical Bid.

Unless **specifically** mentioned in this schedule, the tender shall be deemed to confirm the BYPL's specifications:

Technical Deviations:-

S. No.	NIT Pdf Page No.	NIT Clause No.	NIT Clause Descriptions	Details of Clarification/deviation with justifications

Note – Please enclose detailed GTP and drawings as per specification after the technical deviation sheet

Seal of the Bidder:

Signature:

Name:

BSES

ANNEXURE – 1.12

TYPE TEST REPORTS (SEQUENCE OF TESTS SHALL BE STRICTLY IN ACCORDANCE WITH RELEVANT IS/IEC)								
S No	Test Description	Reference Standard	Reference Standard Clause No.	Name of Testing Lab	Test Report Reference Number	Date of Issue of Report	Report Enclosed on Bid Page No	
							From	To
1								
2								
3								
4								
5								
6								
7								

BSES

ANNEXURE – 1.13

SAMPLE SUBMISSION DETAILS (IF APPLICABLE AS PER SPECIFICATION)		
S No	**Description**	**Bidder's Response**
1	Samples submitted with the bid	Yes/No
1	Sample Type -1	
1.1	Model Number	
1.2	Number of samples	
2	Sample Type -2	
2.1	Model Number	
2.2	Number of samples	

BSES

ANNEXURE – 1.14

QUALIFYING CRITERIA COMPLIANCE INDEX - COMMERCIAL CRITERIA				
S No	**Qualifying Criteria Description as per section 1 clause 2.00**	**Documentary Proof Description**	**Documentary Proof Enclosed on Bid Page No.**	
			From	**To**
1				
2				
3				
4				
5				

BSES

ANNEXURE – 1.15

UNDERTAKINGS
(To be submitted on Bidders Letter Head)

Date: …….

Tender No.: ……..

To

Head of Department
Contracts & Material Deptt.
BSES Yamuna Power Ltd
Shaktikiran Building, Karkardooma,
Delhi 110032

Sir,

We M/s *[name of bidder]*, …… do hereby undertake that

- *[name of bidder]* has "No Litigation" pending with the BYPL or its Group/Associates Companies as on the date of bid opening.
- *[name of bidder] has* not been blacklisted/debarred by any central/state government institution/Electricity utilities as on the date of bid opening.
- *[name of bidder]* shall comply with all the statuary compliances as per the laws/rules etc. before the start of the supply/work.

Yours Sincerely,
For ……..

Authorized Signatory

BSES

ANNEXURE – 1.16

SCHEDULE OF DEVIATIONS - COMMERCIAL

Vendor shall refrain from taking any deviations on this TENDER. Still, in case of any deviations, all such deviations from this tender shall be set out by the Bidder, Clause by Clause in this schedule and submit the same as a part of the Technical Bid.

Unless **specifically** mentioned in this schedule, the tender shall be deemed to confirm the BYPL's specifications:

Commercial Deviations:-

S. No.	NIT Pdf Page No.	NIT Clause No.	NIT Clause Descriptions	Details of Clarification/deviation with justifications

By signing this document we hereby withdraw all the deviations whatsoever taken anywhere in this bid document and comply with all the terms and conditions, technical specifications, scope of work etc. as mentioned in the standard document except those mentioned above.

Seal of the Bidder:

Signature:

Name:

BSES

ANNEXURE – 1.17

ACCEPTANCE FORM FOR PARTICIPATION IN REVERSE AUCTION EVENT

(To be signed and stamped by the bidder)

BSES Yamuna Power Ltd (hereinafter referred to as **"BYPL"**) intends to use the reverse auction through the SAP-SRM tool as an integral part of the entire tendering process. All the bidders who are found as techno commercial qualified based on the tender requirements shall be eligible to participate in the reverse auction event.

The following terms and conditions are deemed as accepted by the bidder on participation in the bid event:

1. BYPL shall provide the user ID and password to the authorized representative of the bidder. (Authorization letter in lieu of the same be submitted along with the signed and stamped acceptance form)
2. BYPL will make every effort to make the bid process transparent. However, the award decision by BYPL would be final and binding on the bidder.
3. The bidder agrees to non-disclosure of trade information regarding the purchase, identity of BYPL, bid process, bid technology, bid documentation, bid details, etc.
4. The bidder is advised to understand the auto bid process to safeguard themselves against any possibility of non-participation in the auction event.
5. In case of bidding through internet medium, bidders are further advised to ensure availability of the entire infrastructure as required at their end to participate in the auction event. Inability to bid due to telephone line glitches, internet response issues, software or hardware hangs; power failure or any other reason shall not be the responsibility of BYPL.
6. In case of intranet medium, BYPL shall provide the infrastructure to bidders, further, BYPL has sole discretion to extend or restart the auction event in case of any glitches in infrastructure observed which has restricted the bidders from submitting the bids to ensure fair & transparent competitive bidding. In case an auction event is restarted, the best bid already available in the system shall become the start price for the new auction.
7. In case the bidder fails to participate in the auction event due to any reason whatsoever, it shall be presumed that the bidder has no further discounts to offer and the initial bid as submitted by the bidder as a part of the tender shall be considered as the bidder's final no regret offer. Any offline price bids received from a bidder in lieu of non-participation in the auction event shall be outright rejected by BYPL.
8. The bidder shall be prepared with competitive price quotes on the day of the reverse auction event.
9. The prices as quoted by the bidder during the auction event shall be inclusive of all the applicable taxes, duties and levies and shall be FOR Landed Cost basis at the BYPL site.
10. The prices submitted by a bidder during the auction event shall be binding on the bidder.
11. No requests for time extension of the auction event shall be considered by BYPL.
12. The original price bids of the bidders shall be reduced on pro-rata basis against each line item based on the final all-inclusive prices offered during the conclusion of the auction event to arrive at the contract amount.

Signature & seal of the Bidder

ANNEXURE – 1.18

CODE OF CONDUCT FOR SUPPLIERS

BSES expects suppliers including their personnel (employees or sub-contractors) to support, embrace and enact the following Code of Conduct (CoC), apart from complying with all national and international regulations and laws that are applicable at any given time. BSES encourages its suppliers to go beyond compliance and embrace the principles of sustainability. BSES will support training and capacity-building programmes undertaken by suppliers, which promote awareness on sustainability and responsible business practices. BSES shall incorporate regulatory compliance and ESG performance as key criteria based on requirements as stated in the Code during evaluation of the suppliers.

A. Promote Environmental Sustainability

All suppliers support a precautionary approach to environmental issues and undertake initiatives to promote better environmental responsibility. To this end, suppliers will

1. Reduce resource consumption and conserve natural resources:
   1.1. Conduct all operations, sourcing, manufacture, distribution of products and the supply of services with the aim of protecting and preserving the environment.
   1.2. Use natural resources rationally and work towards reducing resource consumption (water, energy, fuel, electricity, other materials etc.) and GHG emissions.
   1.3. Identify environmental risks and set up appropriate prevention measures.

2. Prevent pollution and reduce waste generation
   2.1. Maintain all required official permits, licenses and registrations.
   2.2. Prevent contamination, limit waste generation, and avoid or minimise adverse impact on the environment and biodiversity by facilitating reusing and recycling material.
   2.3. Clearly monitor the precautions to be taken during operations & maintenance in case of emission of heat, vibrations, radioactive rays, noise or similar.
   2.4. Use only those chemicals and aerosols with very low or zero ODP (Ozone Depletion Potential), which are allowed as per the regulatory provisions.
   2.5. Ensure that all the chemical and hazardous substances are accompanied by the manufacturer MSDS (Material Safety Data Sheet) during transport, storage, use and disposal, and that instructions mandated be strictly followed. No chemical and hazardous substance shall be received without a MSDS document. All the applicable regulatory guidelines shall be adhered strictly for the procurement, transport, storage, use and disposal of such harmful and hazardous chemicals.
   2.6. Provide written instructions about handling and/or disposal of equipment and product during the life cycle if special handling is required.

B. Commitment to Human Rights, Labour and the Society

Suppliers shall support, respect and protect human and labour rights and make sure their organisation/entity is not complicit in any kind of abuses and/or violations. In this regard, the suppliers must:

1. Fair working conditions
   1.1. Provide and maintain healthy and safe working conditions and welfare facilities for the employees in its establishment.
   1.2. Ensure that that wages and benefits of their employees and subcontractors are fair and comply with applicable national and local laws as well as with contractual agreements.

1.3. Provide all workers, both permanent and non-permanent, with employment documents that are freely agreed to and which respect their legal and contractual rights.

2. Health & Safety

Ensure that the activities of suppliers do not harm the health and safety of their own employees, suppliers and subcontractors, local communities/population, and finally the users of its products and services, which is in accordance with the BSES's Mission Zero Harm in Health and Safety.

3. Child Labour

3.1. No person below 18 years shall be employed or permitted to work in any occupation or process.

3.2. Zero tolerance for any kind of child labour in their establishments and supply chain.

4. Forced Labour

4.1. Under no circumstance shall suppliers use forced labour[1], whether in form of compulsory or trafficked labour, indentured labour, bonded labour or other forms, through direct or indirect use of force and/or intimidation.

4.2. Any kind of slavery, mental and physical coercion, human trafficking and debt bondage in the supply chain shall not be tolerated.

5. Wages and Working hours

5.1. Ensure that all applicable regulations related to wages, overtime compensation and other legally mandated benefits of their employees and subcontractors are fair and comply with applicable national and local laws as well as with contractual agreements. Minimum wages are applicable as per applicable in central Act and State rules.

5.2. Ensure that maximum working hours laid down and are adhered to.

6. Freedom of Association and Collective Bargaining

6.1. Recognise and respect the rights of workers to freedom of association and collective bargaining. Workers are not intimidated or harassed in the exercise of their right to join or refrain from joining any organisation.

6.2. Ensure that all employees can communicate with the management regarding working conditions.

7. Non-Discrimination and Equal opportunity

7.1. Commit, within the scope of prevailing laws and statutes, to oppose all forms of discrimination[2].

7.2. Maintain a work environment free from any form of discrimination and harassment.

7.3. Refrain from discrimination in hiring and employment practices on grounds of skin colour, age, caste, gender, race, ethnicity, nationality, socio-economic background, physical or mental disability, religion, sexual orientation, marital status, pregnancy, dependants, political or religious opinion, ideology, union membership and personal or social circumstances. Special attention must be paid to the rights of workers most vulnerable to discrimination.

8. Zero Tolerance towards Harassment

8.1. Treat all employees with respect and dignity and furthermore ensure that their own suppliers treat their employees in the same manner.

8.2. No tolerance towards unacceptable treatment of employees, such as physical punishment or torture, sexual harassment[3], or abuse, mental or physical coercion or verbal abuse, or the threat of any such treatment.

8.3. No worker should be subjected to any physical, sexual, psychological, or verbal harassment, abuse or other form of intimidation.

C. Ethical Integrity and Legality

Suppliers shall demonstrate the highest standard of integrity, ethics, and business conduct.

1. Compliance with Applicable laws and regulations:

1.1. All activities must be carried out in compliance with the legislation that is applicable in the countries in which the suppliers operate.

1.2. All other applicable international laws and regulations must be complied with, including those relating to international trade (such as those relating to sanctions, export controls and reporting obligations), data protection and antitrust/ competition laws.

1.3. Avoid any conduct that could tarnish or damage the reputation of BSES.

2. Anti-Corruption & Anti Bribery

2.1. All forms of bribery and corruption are prohibited

2.2. Adequate measures and procedures should be in place to prevent bribery in all commercial dealings.

2.3. Maintain a policy of 'Zero Tolerance' of any practice that may be deemed to be corruption, either active or passive.

2.4. No tolerance for unacceptable conduct, which includes, but not limited to, non-compliance with anti- corruption laws and, directly or indirectly offering, promising, hiring or authorising payments in cash or in kind to any BSES employee, public official or any other person or entity, with intention of a) obtaining or retaining business b) Influencing business decisions; and/or c) securing an unfair advantage.

3. Conflict of Interest

3.1. All and any conflict of interest in any business dealings with BSES, of which the suppliers are aware, should be declared to BSES so that appropriate action can be taken.

3.2. Avoid a situation where there is a real or potential conflict of interest with BSES employees, or with their family or closely associated persons, that could affect the independence or objectivity of their professional actions or decisions. If avoidance is not possible, the suppliers should inform BSES of the situation so that appropriate action can be taken.

4. Insider Trading and Other Economic Crimes

4.1. Ensure that all business and commercial dealings are transparently performed and accurately recorded in the books and records.

4.2. Comply with applicable anti-money laundering laws, conduct business only with ethically responsible partners and receive funds only from legitimate sources.

4.3. Avoid actual or attempted participation in economic offences, such as (but not limited to) money laundering, criminal breach of trust, counterfeiting, criminal misappropriation of properties, forgery, cheating, extortion, embezzlement and fraud.

4.4. Refrain from insider trading. No confidential information regarding BSES is used to either engage, facilitate or support insider trading in BSES's shares.

4.5. Take necessary measures to detect and prevent any illicit or suspicious forms of payment and inform and/or report through established channels if it has any suspicion or concern in this regard.

5. Gifts & Hospitality

5.1. Any business entertaining/hospitality with BSES should be modest in value, appropriate, and

compliant with the law and company policies, entirely for the purpose of maintaining good business relations and not intended to influence in any way BSES's decisions on future business relationship.

5.2. Only gifts/honorarium of nominal value accepted or offered on festivals, at conferences, etc. will be permitted. Such gifts should comply with local laws and customs (including cultural and religious festivals) and should not be prohibited under applicable law and should not include cash or cash equivalents, gold or other precious metals, gems or stones.

5.3. Neither receive nor offer or make, directly or indirectly, any illegal payments, remunerations, gifts, donations or comparable benefits that are intended, or perceived, to obtain uncompetitive favours for the conduct of its business with BSES.

5.4. Neither directly or indirectly offer any gift, entertainment, trip, discount, service, or other benefit to any official of BSES or his/her close relations which would or be capable of compromising, influencing, liable to corrupt the integrity and objectivity of that person.

6. Competition, Confidentiality and Data Privacy

6.1. All market survey/other entities information must be obtained and used legitimately and in compliance with all applicable laws and regulations.

6.2. No attempt should be made to divulge to BSES any information about any other entity in violation of any law or agreement.

6.3. Likewise, BSES's confidential information must not be shared with any Supplier unless expressly permitted by BSES in writing by authorised signatory under the respective purchase order or agreement, as the case may be.

7. Transparency and Ethics

7.1 Fair competition

Avoid any action that may constitute an illegal practice of unfair competition and ensure compliance with applicable competition laws.

7.2 Corporate image and reputation

Suppliers must NOT:

- Make false statements or provide any misleading information regarding its products/services.
- Give the impression of representing or being the spokesperson of BSES while getting associated with any religious/political party or for activities in their personal capacity.

8. Protection of Intellectual Property and No Misuse or Improper use of BSES's assets/ property

8.1. Respect and protect all confidential information and intellectual property of BSES.

8.2. Do not misuse and share assets of BSES and employ them only for the purpose of conducting the business for which they are duly authorised by BSES. These include tangible assets such as equipment and machinery, systems, facilities, materials, and resources and intangible assets such as intellectual property rights, processes, know how & technology, proprietary information, etc.

8.3. Safeguard, secure, and protect BSES's assets and information technology from theft, destruction, misappropriation, wastage, and abuse.

8.4. Promptly report loss, theft or destruction of any intellectual property and data of the Company or that of any Supplier.

9. Financial Records and Accuracy in Books

9.1. Have accounting practices in place to ensure accuracy of its financial books and records.

9.2. Ensure accurate accounting and proper reporting of information pertaining to the business and

financial results in accordance with applicable Accounting Standards [Generally Accepted Accounting Principles (GAAP)].

9.3. Ensure compliance to applicable laws and regulations with respect to accounting and taxation and timely discharge of tax liability.

10. Sanction Laws

10.1 Do not engage in any dealings or transactions with any person, or in any country or territory that are subject to global / regional sanctions as mentioned herein below in clause 10.2. BSES is vigilant of its suppliers who may be on a sanctions list or have a related company in a country subject to global/regional sanctions. In case of any concerns, the supplier should immediately report to BSES.

10.2 Do not be subject to or the target of any economic or financial sanctions or trade embargoes imposed, administered or enforced by the U.S. Government including without limitation by the World Bank or by the United Nations Security Council, the European Union, the United Kingdom including by Her Majesty's Treasury or the Department of Business, Innovation and Skills, a relevant regulatory authority or the Minister of Foreign Affairs of Canada under the Special Economic Measures Act or the United Nations Act or legislation or regulations with similar purpose or effect or any other relevant sanctions authority of any other country (collectively, 'Sanctions Laws') nor is the Company or any of its subsidiaries / affiliates located, organised or resident in a country or territory that is the subject of the target of Sanctions Laws

10.3 Do not take any action which places or is likely to place BSES in violation of Sanctions Laws and/ or breaches affecting the reputation and/ or business interests of BSES

11. Responsible Sourcing

Ensure that goods and materials are not sourced in a suspicious or illegal way and implement measures for sustainable procurement practices[3] to ensure compliance with laws and regulations.

12. Quality of Product and Services

Products and services should meet the specifications, quality, safety and environmental criteria specified in the relevant contract documents and required by applicable laws

13. Corporate Citizenship

Suppliers shall be committed to be good corporate citizens, not only in compliance with all relevant laws and regulations, but also by assisting and supporting initiatives to improve the quality of life of local communities/regions in which it operates. The activities may be, but not limited to, community health and family welfare, vocational training, education and literacy and employment.

[1] 'Forced Labour' or 'Involuntary Labour' refers to all work or service that is extracted under the menace of penalty. It also includes terms such as, bonded labour and modern slavery. It also includes any labour for which the worker receives less than the government stipulated minimum wage.

[2] 'Discrimination' refers to unjust or prejudicial treatment of people, especially on the grounds of, but not limited to, caste, creed, gender, race, ethnicity, age, colour, religion, disability, socio-economic status or sexual orientation.

[3] Sustainability shall mean to device a practice & procedure proactively to sustain resources of organisation and society at present levels with reasonable degradation. Sustainable procurement or sourcing is the process of making purchasing decisions that meet an organisation's needs for goods and services in a way that benefits not only the organisation but society, while minimising its impact on the environment. Organisation integrates the sustainability into business model as a resultant of ESG principles. This is achieved by ensuring that the working conditions of its suppliers' employees are decent, the products or services purchased are sustainable, where possible, and that socio- economic issues, such as inequality and poverty, are addressed.

GENERAL CONDITIONS OF CONTRACT (GCC)

BSES

GENERAL CONDITIONS OF CONTRACT (GCC)

The General Condition of Contract shall form a part of specifications, contract document.

1.0 General Instructions

1.01 All the Bids shall be prepared and submitted in accordance with these instructions.

1.02 Bidder shall bear all costs associated with the preparation and delivery of its Bid, and the Purchaser will in no case be responsible or liable for these costs.

1.03 The Bid should be submitted by the Bidder in whose name the bid document has been issued and under no circumstances it shall be transferred/sold to the other party.

1.04 The Purchaser reserves the right to request any additional information and also reserves the right to reject the proposal of any Bidder if, in the opinion of the Purchaser, the data in support of RFQ requirement is incomplete.

1.05 The Bidder is expected to examine all instructions, forms, terms & conditions and specifications in the Bid Documents. Failure to furnish all information required in the Bid Documents or submission of a Bid not substantially responsive to the Bid Documents in every respect may result in rejection of the Bid. However, the Purchaser's decision in regard to the responsiveness and rejection of bids shall be final and binding without any obligation, financial or otherwise, on the Purchaser.

2.0 Definition of Terms

2.01 COMPANY/OWNER/PURCHASER/BUYER/CUSTOMER means BSES Yamuna Power Ltd (BYPL), a company incorporated under the Companies Act 1956 and having its registered office at BSES Yamuna Power Limited, Shakti Kiran Building, Karkardooma, Delhi - 110032, which expression shall include its authorized representatives, agents, successors and assigns.

2.02 BIDDER / SELLER / CONTRACTOR / AGENCY / MANUFACTURER shall mean the firm who quotes against this bid enquiry issued by the Purchaser. "Supplier" or "Supplier" shall mean the successful Bidder and/or Bidders whose bid has been accepted by the Purchaser and on whom the "Letter of Acceptance" is placed by the Purchaser and shall include his heirs, legal representatives, successors and permitted assigns wherever the context so admits.

2.03 OFFER SHEET shall mean Bidder's firm offer submitted to BYPL in accordance with the specification.

2.04 CONTRACT PRICE/RATE means the price specified in the Letter of Intent, Letter of Award, Rate Contract, or Purchase Order, as applicable.

2.05 SITE means the working location in the BYPL area. Under this tender, working location shall be as mentioned elsewhere.

2.06 STORE means the location/ area where goods or products are kept or as defined elsewhere in this Contract.

2.07 ENGINEER IN CHARGE means the Company's authorized/nominated representative for the purpose of carrying out the work.

2.08 APPLICABLE LAW means the constitution of India and any act, rule, regulation, directive, notification, code, order or instruction having its force of law enacted or issued by any competent legislature or Governmental Agency (including those related to taxes, duties, assessments, expropriation and compulsory acquisition) as may be in effect from time to time the implications thereof shall be deemed a Change in Law or Change in Permits.

2.09 OTHER CLEARANCES means any consent, approval, permit or other authorization that is required to be granted by authorities (local, government or any other) essential to start/complete the work.

2.10 DEFECT LIABILITY PERIOD means the period during which the contractor shall remain liable for repair or replacement of any defective part of the work performed under the contract, free of cost.

2.11 TENDER SPECIFICATION means the Indian Standard specification of the work and description of work as detailed in Tender document/Tender enclosed and all such particulars mentioned directly/referred to or implied as such in the Tender.

2.12 SPECIFICATIONS means collectively all the terms and stipulations contained in those portions of this bid document known as RFQ, Commercial Terms & Conditions, Instructions to Bidders, Technical Specifications and the Amendments, Revisions, Deletions or Additions, as may be made by the Purchaser from time to time.

2.13 CODES AND STANDARDS means all the applicable codes and standards as indicated in the Specification.

2.14 CHANGE OF WORK means any addition to, deletion from, suspension of or other modification, to the Work, or to the quality, function or as delineated in this Contract, including any such addition, deletion, suspension or other modification, which requires a change in one or more of the Technical Specifications and the completion schedule

2.15 GOOD INDUSTRY PRACTICE means the exercise of that degree of skill, diligence and prudence which would reasonably and ordinarily be expected from a skilled, experienced and recognised Service Provider engaged in the provision of services similar to the one undertaken by the Service Provider and acting generally in accordance with the prevailing laws, rules, regulations, codes and industry standards.

2.16 CONTRACT shall mean the Letter of Intent / Letter of Acceptance/ Agreement / Contract / Purchase Order issued by the Purchaser.

2.17 EFFECTIVE DATE OF CONTRACT means the date of issue/award of contract shall be the Effective Date of Contract or Contract Commencement date.

2.18 CONTRACT PERIOD means the period during which the "Contract" shall be executed as agreed between the Supplier and the Purchaser in the Contract inclusive of the extended contract period for reason beyond the control of the Supplier and/or Purchaser due to force majeure.

2.19 CONTRACT COMMENCEMENT DATE means the date of issue/award of contract shall be the Effective Date of Contract or Contract Commencement date.

2.20 CONTRACT PERIOD shall mean the period during which the "Contract" shall be executed as agreed between the Supplier and the Purchaser in the Contract inclusive of the extended contract period for reason beyond the control of the Supplier and/or Purchaser due to force majeure.

2.21 CONTRACT COMPLETION DATE means the date of expiry of Guarantee/defect liability Period shall be deemed as the Contract Completion Date.

2.22 ACCEPTANCE shall mean and deemed to include one or more of the following as will be stipulated in the specification:

a) The written acceptance of material by the inspector at suppliers works to ship the materials.
b) Acceptance of material at Purchaser site stores after its receipt and due inspection/ testing and release of material acceptance voucher.
c) Where the scope of the contract includes supply, acceptance shall mean issue of necessary equipment / material takeover receipt after installation & commissioning and final acceptance.

2.23 **Contract Documents & Priority**

2.23.1 The several documents forming the Contract are to be taken as mutually explanatory of one another, but in case of ambiguities or discrepancies, the same shall be explained and adjusted by the Employer, who shall thereupon issue to the Vendor, instructions thereon. In such event, unless otherwise provided in the Contract, the priority of the documents forming the Contract shall be as follows:

a. Contract Agreement/Work Order
   I. Special Conditions of Contract
   II. General Conditions of Contract
b. The Letter of Acceptance/ Intent
c. Agreed Minutes of the Tender Negotiation Meetings
d. Agreed Minutes of the Tender Technical Meetings
e. The Priced Bill of Quantities
f. The Technical Specifications / Scope of work
g. The Tender document, including all Appendices and/or Addenda, Corrigendum the latest taking precedence.

3.0 Governing Laws & Jurisdiction

3.01 The laws applicable to this Contract shall be the Laws in force in India.

3.02 All disputes arising in connection with the present Contract shall be settled amicably by mutual consultation failing which shall be finally settled as per the rules of Arbitration and Conciliation Act, 1996 at the discretion of Purchaser. The venue of arbitration shall be Delhi, India

4.0 Scope of Supply & Services - General

4.01 The "Scope of Supply" shall be on the basis of Bidder's responsibility, completely covering the obligations, responsibility and supplies provided in this Bid enquiry whether implicit or explicit.

4.02 Bidder shall have to quote for the Bill of quantities as listed in Section - II of this RFQ.

4.03 Quantity variation and additional requirements if any shall be communicated to successful bidder during project execution.

4.04 All relevant drawings, data and instruction manuals.

4.05 Refer enclosed document no. BYPL-SOW-CFPI-25-26-04-R0 for Scope of Supply & Work For SCADA Communicable FPI System

5.0 Transmittal Approval/Clearance For Manufacturing

5.01 Transmittal Approval Documents (GTP/Drawings/QAP/etc.) are to be submitted within 15 days to the concerned official in BYPL for approval. BYPL shall approve/provide comments on the submitted

drawings within 7 days of first submission. In case resubmission is required, it shall be completed by the supplier within next 5 days. The timelines for approval by BYPL shall be 5 days in case of every resubmission. However, repetitive submissions are not desirable.

5.02 Manufacturing shall be started only after Transmittal approval by BYPL & giving manufacturing clearance.

5.03 Relevant documents submitted for Transmittal approval should be made considering all the pre-award discussion/confirmation between BYPL & Vendor.

5.04 Post Order Transmittal Approval shall be completed within 04 weeks from the date of Rate Contract/Purchase Order. Delay in getting Transmittal Approval should not be an excuse for late deliveries and waiver of LD Charges.

6.0 Quality Assurance and Inspection

6.01 Immediately on award of contract, the Vendor shall prepare detailed quality assurance plan/test procedure identifying the various stages of manufacture, quality checks performed at each stage, raw material inspection and the Customer hold points. The document shall also furnish details of method of checking, inspection and acceptance standards/values and get the approval of Purchaser before proceeding with manufacturing. However, Purchaser shall have right to review the inspection reports, quality checks and results of suppliers in house inspection department which are not Customer hold points and the supplier shall comply with the remarks made by purchaser or his representative on such reviews with regards to further testing, rectification or rejection, etc.

6.02 Witness and Hold points are critical steps in manufacturing, inspection and testing where the supplier is obliged to notify the Purchaser in advance so that it may be witnessed by the Purchaser. Final inspection is a mandatory hold point. The supplier is to proceed with the work past a hold point only after clearance by purchaser or a witness waiver letter from BYPL.

6.03 The performance of waiver of QA activity by Purchaser at any stage of manufacturing does not relieve the supplier of any obligation to perform in accordance with and meet all the requirements of the procurement documents and also all the codes & reference documents mentioned in the procurement document nor shall it preclude subsequent rejection by the purchaser.

6.04 On completion of manufacturing, the items can only be dispatched after receipt of Material Dispatch Clearance Certificate (MDCC)/Instructions issued by the Purchaser.

6.05 All in-house testing and inspection shall be done without any extra cost. The in-house inspection shall be carried out in presence of BSES/BSES authorized third party inspection agency. Cost of Futile/abortive visit(s) shall be debited from the invoices.

6.06 Purchaser reserves the right to send any material being supplied to any recognized laboratory for testing, wherever necessary and the cost of testing shall be borne by the Vendor. In case the material is found not in order with the technical requirement/specification, the charges along with any other penalty that may be levied are to be borne by the Vendor. To avoid any complaint the supplier is advised to send his representative to the stores to see that the material sent for testing is being sealed in the presence of Vendor's representative.

7.0 Inspection & Test Charges

7.01 GOODS shall be inspected by BUYER and/or third party inspection agency nominated by BUYER. Inspection shall carry out stage-wise/final inspection as per agreed QA/QC procedure. In addition, inspection of GOODS shall be carried out at our Site/stores. VENDOR shall, however, repair/replace the damaged/rejected GOODS to the satisfaction of BUYER at no extra cost.

7.02 Inspection charges are included in the total order value, however, BUYER will bear third-party inspection charges. In case of a futile/abortive visit of BUYER's inspector at VENDOR'S works, the cost towards the same shall be debited from the VENDOR's invoices.

7.03 GOODS covered by this PURCHASE ORDER shall not be dispatched in whole or in part until VENDOR has received a written Release for Shipment Notice from BUYER or their designated representative.

7.04 Stage/Pre-Dispatch Inspection request must be submitted at least seven (7) days in advance using the official format provided by BYPL.

8.0 Handling and Storage

8.01 Material Safety Data Sheet (MSDS), detail handling & storage instruction sheet/manual, wherever applicable, to be furnished before the commencement of supply and one copy is to be submitted in-store/site with First Lot.

9.0 Packing, Packing List & Marking

9.01 **Packing:** Supplier shall pack or shall cause to be packed all Commodities in crates/boxes/drums/containers/cartons and otherwise in such a manner as shall be reasonably suitable for shipment by road or rail to BYPL, Delhi/New Delhi stores/site without undue risk of damage in transit. All the packaging materials as prescribed shall be supplied preferably with bio-degradable packing- materials.

9.02 **Packing List:** The contents of each package shall be itemized on a detailed list showing the exact weight, and extreme outside dimensions (length, width & weight) of each container/box/drum/carton, Item SAP Code, PO No & date. One copy of the packing list shall be enclosed in each package delivered.

10.0 Documentation

10.01 The vendor must procure all items from BYPL-approved sources in accordance with BYPL specifications/Transmittal Approval. The Vendors shall submit copies of Material/Type Test Certificates, O&M Manuals, and Approved & As-built drawings, related to various equipment. The vendor shall ensure strict compliance with the specifications and Field Quality Procedures issued by BYPL.

11.0 Price Validity

11.01 All bids submitted shall remain valid, firm and subject to unconditional acceptance by BYPL Delhi for 120 days from the due date of submission. For awarded suppliers, the prices shall remain valid till contract completion.

12.0 Effective Date of Commencement of Contract

12.01 The date of the issuance of the Letter of Intent/Letter of Acceptance/Purchase Order shall be treated as the effective date of the commencement of Contract.

13.0 Delivery Period For PO

13.01 The contractual delivery for the Goods covered under this Contract shall be completed as per the schedule.

13.02 Delivery shall mean delivery at F.O.R BYPL - DELHI STORES/SITES.

13.03 Request for delivery date extension, if any, shall be submitted to BYPL 7(seven) days prior to the contractual delivery date/ schedule mentioning proper justifications/ reasoning for the delay. Any reason which is not attributable to BYPL may not be entertained.

14.0 Delivery Terms & Address

14.01 The GOODS shall be delivered at BYPL Store(s)/Site(s). The goods shall be dispatched on FOR destination basis including payment of local taxes and duties, if any.

14.02 Unloading at BYPL Store(s)/Site(s) shall be done by Vendor.

14.03 Wherever applicable, the Vendor shall be responsible for issuing required transit documents/E Way Bills for the movement of Goods and the logistic partner/transporter shall not be liable for any loss arising due to confiscation of goods by government agencies on account of lack of proper documents or any mis-declaration.

15.0 Transportation

15.01 VENDOR shall arrange transportation of GOODS from VENDOR's/SUB-VENDOR's works/warehouse(s) to BUYER's Store(s)/Site(s).

15.02 Charges for transportation of GOODS from VENDOR's works to Store(s)/Site(s) are included in total order value.

16.0 Transit Insurance

16.01 Transit Insurance shall be arranged by the Vendor.

16.02 DAMAGE/LOSS OF CARGO IN TRANSIT: Vendor shall be solely responsible for coordinating with the concerned insurance company for procuring insurance for material and/or Goods, processing claim lodgment and settlement. Notwithstanding the insurance cover, in case of loss/damage to material and/or Goods, in any manner and for any cause whatsoever, Vendor shall cause the damaged cargo to be replaced and delivered to the Purchaser with new material and/or Goods within 30 days of such loss/damage. The Vendor shall be solely responsible for all expenses in relation to the replacement and delivery in such circumstances.

17.0 Acceptance Of Goods

17.01 GOODS shall be accepted subject to Receipt of Material Dispatch Clearance Certificate.

17.02 The Purchaser shall not accept materials if LR/ RR / Bilty and the Original Tax Invoice (Transporter Copy) are not handed over at store/site. The Vendor shall draw all dispatch documents in favour of Purchaser as Consigned to and billed to.

17.03 The materials shall be supplied during working hours from 10AM to 5PM. No delivery shall be effected after this time unless prior intimation is given to the Purchaser.

17.04 The Vendor shall take signature of the authorized person at store/site with Purchaser's seal duly receipting the materials and the quantities in the absence of which payment shall not be made by the Purchaser.

17.05 The Vendor shall ensure exact quantities are supplied as per standard packaging and if the quantities are short-supplied, as per verification at the Vendor's store/site, the same shall be adjusted and net payment shall be made accordingly.

17.06 The Purchaser has the exclusive right to reject the goods if not supplied strictly as per the terms and conditions of this Order.

18.0 Prices/Rates/Taxes

18.01 **Price basis for supply of materials**

a) The rates finalized for this contract shall be firm for the entire duration of the contract and are not subject to any variation and escalation for any reason whatsoever.
b) The supply prices are inclusive of packing, forwarding, and loading at manufacturer's premises, payment of GST, Freight, and any other local charges. Octroi is presently not applicable in Delhi and however if applicable shall be reimbursed at actuals.
c) The supply prices shall also include unloading at BYPL Delhi/New Delhi stores/sites.
d) Transit insurance will be arranged by Vendor.

19.0 Taxes & Duties

19.01 Prices for Goods are on Ex- Works basis. For the Goods covered under the GST laws, all taxes that are applicable under CGST, SGST, UGST, IGST and GST Compensation Cess shall be payable extra.

19.02 For the Goods not covered in the GST laws, the applicable ED, VAT / CST shall be payable extra at applicable rates.

19.03 GSTIN of BSES YAMUNA POWER LTD - 07AABCC8569N1Z0
CST No of BSES YAMUNA POWER LTD -07740254593
TIN NO of BSES YAMUNA POWER LTD - 07740254593
PAN NO of BSES YAMUNA POWER LTD - AABCC8569N

19.04 At the end of each month, the SELLER must submit their detail of invoices and amount thereof to the concerned officer in charge, within 07 days after the close of the respective month to which supply relates. Non-submission of the said request would be treated as good as the SELLER has no requirement for reconciliation.

20.0 Variation in Taxes, Duties & Levies

20.01 The total order value shall be adjusted on account of any variations in Statutory Levies imposed by Competent Authorities by way of fresh notification(s) within the stipulated delivery period only. In case of reduction in taxes, duties and levies, the benefits of the same shall be passed on to BUYER.

20.02 No other Taxes, Duties or levies other than those specified above will be payable by BUYER except in case of new Levies, Taxes or duties imposed by the Competent Authorities by way of fresh notification(s) after the issue of PURCHASE ORDER but within the stipulated delivery period.

20.03 Notwithstanding what has been stated above, changes in Taxes, Duties & Levies shall apply only to that portion of PURCHASE ORDER not executed on the date of notification by the Competent Authority. Further, changes in Taxes, Duties & Levies after the due date of Delivery shall not affect PURCHASE ORDER Terms and Value.

20.04 PURCHASE ORDER value shall not be subject to any variation on account of variation in Exchange rate(s).

21.0 Taxes & Duties on raw materials & bought out components

21.01 Taxes & Duties on raw materials & bought-out components are included in Order Value and are not subject to any escalation or variation for any reason whatsoever.

21.02 Taxes & Duties on raw materials & bought-out components procured indigenously are included in Order Value and are not subject to any escalation or variation for any reason whatsoever.

22.0 Tax Indemnity Clause

22.01 Vendor (along with its affiliates in India or overseas including any agent/ third party contractor or any other person appointed by such affiliates for this agreement) agrees that it will be solely responsible for performing all compliances and making payments of all taxes (direct tax or indirect tax including but not limited to income-tax, transfer pricing, value added tax, SGST, CGST, IGST, UTGST, GST Compensation Cess custom duty, excise duty, Research and Development Cess, etc.), cesses, interest, penalties or any other tax/ duty/ amount/ charge/ liability arising either out of laws/ regulations applicable in India and overseas or because of a demand/ recovery initiated by any revenue authority under laws/ regulations applicable in India or overseas.

22.02 In case any tax liability (including but not limited to income tax, transfer pricing, value added tax, SGST, CGST, IGST, UTGST, GST Compensation Cess, custom duty, excise duty, Research and Development Cess, etc.), cesses, interest, penalties or any other tax/ duty/ amount/ charge/ liability becomes payable by Purchaser due to failure of the Vendor, or any of its affiliates in India or overseas including any agent/ third party contractor or any other person appointed by such affiliates for this agreement, to comply with the relevant laws/ regulations applicable in India or overseas, Vendor undertakes to indemnify Purchaser for an amount equal to amount payable by Purchaser.

22.03 Further, Vendor undertakes to keep Purchaser indemnified at all times against and from all other actions, proceedings, claims, loss, damage, costs and expenses which may be brought against Purchaser or suffered or incurred by Purchaser and which shall have arisen either directly or indirectly out of or in connection with failure of The Vendor, or any of its affiliates in India or overseas including any agent/ third party contractor or any other person appointed by such affiliates for this agreement, to comply with relevant obligations/ compliance under any law/ regulations applicable in India and overseas.

22.04 The parties agree to follow the following process in case any communication of demand, arising out of non-compliance by Vendor (along with its affiliates in India or overseas including any agent/ third party contractor or any other person appointed by such affiliates for this agreement), is received by Purchaser:

22.04.1 On Purchaser receiving any communication from a competent authority demanding tax liability (including but not limited to income tax, transfer pricing, value added tax, SGST, CGST, IGST, UTGST, GST Compensation Cess custom duty, excise duty, Research and Development Cess, etc.),

cesses, interest, penalties or any other tax/ duty/ amount/ charge/ liability, Purchaser shall, within 5 common working days from the date of receipt of such communication (save where the period to respond to the relevant authority is less than five days, in which case, as soon as reasonably possible) inform Vendor in writing of such communication.

22.04.2 Pursuant to receiving communication from Purchaser, Vendor shall suggest to accept the communication and pay the demand amount to the competent authority. In such an event, Vendor shall reimburse such amount paid to Purchaser within 5 working days from the date of payment by Purchaser to the competent authority.

22.04.3 If Vendor advises in writing and Purchaser agrees to dispute the demand, then Purchaser shall dispute the matter with competent authority as per due process prescribed under the regulations and Purchaser shall not pay the Tax Demand. In such scenario, cost of litigation including but not limited to Counsel cost, filing fees, other related charges, should be reimbursed by Vendor to Purchaser. Additionally, If any coercive steps of recovery are initiated by the department, then Purchaser would pay such amount (including by way of adjustment of refunds due to it) and the same would be reimbursed by Vendor within 5 working days from date of such recovery from Purchaser. Purchaser will take all necessary steps to avoid such recovery measures.

22.04.4 On determination of the demand through an Order issued by a Tribunal or any other similar Authority, by whatever name called, under any law applicable in India or overseas, if the demand or any part thereof becomes payable and is paid by Purchaser, then Vendor undertakes to reimburse such amount to Purchaser within 10 days from the date of payment. Alternatively, if on determination of the demand through an Order, no amount is payable by Purchaser then any refund arising to Purchaser due to such an Order shall be passed on to Vendor within 10 days from the date of receipt of refund.

23.0 Invoicing Instructions

23.01 Invoices in triplicate [1) Original for recipient, 2) Duplicate for Transporter, 3) Triplicate for supplier] shall be made out and delivered to the following address: BSES YAMUNA POWER LIMITED, SHAKTI KIRAN BUILDING, KARKARDOOMA, DELHI-110032.
MDCC will be issued separately for Capex and Opex. The supplier will submit the invoice in accordance with the MDCC.

23.02 Vendor shall obtain GST registration in the State from where the supply will be carried out. Vendors supplying Goods to the Purchaser shall have a valid GST registration number and shall submit GST Tax Invoice and other documents as per SGST Act, CGST Act, IGST Act, UTGST Act, GST Compensation Cess Act and Rules made there under. Failure to submit GST Tax Invoice shall be liable for withholding SGST, CGST, IGST, UTGST, GST Compensation Cess amount charged by the vendor while releasing the payment.

23.03 Invoice will be in the name of BSES YAMUNA POWER LIMITED & address of the store/site mentioned in the MDCC. Invoice should contain all information as required under GST Invoice, Debit Note and Credit Rules. The government has notified rules of invoicing under GST along with a template of invoice(GST INV-01) covering the elements such as supplier's details, GSTIN No, HSN Codes, item details, GST tax rates, etc that need to be presented by the supplier.

23.04 Vendor to carefully examine and charge relevant CGST / SGST, UGST, IGST and GST compensation cess as applicable to the transactions.

23.05 Timely provision of invoices / Debit Notes / Credit Notes:

23.05.1 Vendor to timely provide invoice / Debit note / Credit note to enable Purchaser to claim tax benefit on or before stipulated time period. All necessary adjustment entries (Credit Notes, Purchase Returns, Debit Notes) shall be made within the timelines prescribed under the GST Laws.

23.05.2 In case of receipt of advance, the Vendor undertakes to raise the tax invoice. Purchaser, upon payment of advance, shall issue payment voucher as per applicable GST laws and rules. Four copies of the invoices need to be provided by suppliers and wherever the law requires, an Electronic Reference Number for each invoice. Documents and devices to be carried by a person-in-charge of a conveyance under.

23.06 E Way Bills/transit documents for movement of Goods:
Wherever applicable, the Vendor shall be responsible for issuing required transit documents/E Way Bills for movement of Goods and the logistic partner/transporter shall not be liable for any loss arising due to confiscation of goods by government agencies on account of lack of proper documents or any mis-declaration. The Supplier is responsible to comply with rules applicable for E-way bill. Any violation in provision of E-way Bill will attract penalty and seizure of Transit Material. Any Penalty and Pre-Deposit due to violation of rules/provisions shall be paid and borne by Supplier. Also, Supplier is responsible for releasing of goods from Authority whether CGST/SGST. Delay in supply from the contractual date due to seizure of goods shall also attract liquidated damages.

23.06 Any Vendors / Contractors / Service providers 'shall' mention the following minimum requirements in 'invoice' while furnishing Invoices with us:
a) Invoice / Credit Note Number and Date.
b) Address of supplier/service provider and GSTN.
c) Customer Name and Address as per GST Registration Certificate and GST registration Number.
d) 'Shipped to' and 'Billed to' addresses.
e) Place of Supply.
f) Description of Goods/Service along with unit of measurements.
g) HSN / SAC Code.
h) Taxable value (Gross & deduct Discount separately if allowed)
i) Rate and amount of Tax separately for CGST, SGST and IGST as applicable.
j) Signature of Supplier. (For e-invoices physical signature is not required)
k) Whether Reverse Charge is applicable or not.

24.0 Terms of Payment and Billing

24.01 **For Supply of equipment/item:**
Part 1) 90% of basic value with 100% taxes and duties shall be made within 45 days from the date of receipt & acceptance of material at site on against submission of following documents against dispatch of each consignment at our Vendor Support Cell (VSC):
a) Signed copy of accepted Rate Contract / Purchase Order (for first payment)
b) LR / RR / BL as applicable
c) Challan as applicable
d) One (01) copies of Supplier's detailed Recipient Invoice showing Commodity description, quantity, unit price, total price and basis of delivery, and being 100% of the value of the consignment claimed.
e) One (01) copies of Supplier's transporter invoice duly receipted by BYPL Store& Original certificate issued by BYPL confirming receipt of the subject material at Store/Site and acceptance of the same as per the provisions of the contract.
f) One (01) copies Packing List / Detailed Packing List
g) Approved Test certificates / Quality certificates, if applicable
h) Certificate of Origin, if applicable
i) Material Dispatch Clearance Certificate (MDCC)

j) Warranty / Guarantee Certificate, if applicable
k) Checklist for bill submission.

Part 2) Balance 10% of basic value shall be paid in 45 days from the date of successful testing, commissioning and handing over of individual Package Substation duly certified by BYPL Engineer-in-Charge.

In case of receipt of material at site/store and not erected or commissioned within 6 months from the date of receipt of material at site/store, Balance 10% of basic value shall also be released.

For Services of equipment/item:

Payment shall be made as under (Substation wise):

i) 100% payment shall be due after 45 days of submission of your bills, from the date of successful testing, commissioning and handing over of the entire installation along with work completion certificate at our office. The work completion certificate shall be issued by Engineer-In-Charge by certifying that the work has been completed to full satisfaction.

All bills shall be submitted to the Engineer In charge / Package Engineer for certification. Bills shall be complete in all respect including ESI / HR compliance, Quality compliance, HSE compliance, Store compliance, Finance compliance etc. An established procedure is followed at site. Incomplete bills / invoices will not be considered for processing payments.

24.02 Purchaser has the right to recover tax loss, interest and penalty suffered due to any non-compliance of tax laws by the Vendor. In the event, Purchaser is not able to avail any tax credit due to any shortcoming on the part of the Vendor (which otherwise should have been available to Purchaser in the normal course), then the Vendor at his own cost and effort will get the shortcoming rectified. If for any reason the same is not possible, then the Vendor will make 'good' the loss suffered by Purchaser due to the tax credit it lost. In such event, any amount paid to the Vendors shall be first attributable to the tax (GST) charged in the invoice and the balance shall be considered towards the 'value' of supply of goods/ services.

24.03 Purchaser shall deduct "Tax Deducted at Source" wherever applicable and at the rate prescribed under the GST Laws or any other Indian law and remit the same to the Government. Necessary TDS certificates as per law shall be issued by the purchase to the vendor.

24.04 Any liability arising out of dispute on the tax rate, classification under HSN, calculation and payment of tax to the Government will be to the Vendor's account.

24.05 Where the supply of Goods is liable to GST under reverse charge mechanism, then the supplier should clearly mention the category under which it has been registered and also that "the liability of payment of GST is on the Recipient of Supply".

25.0 Performance Guarantee

25.01 To be submitted within twenty-eight (28) days from the date of issuance of the Letter of Intent/Award/PO. Bidder shall submit PBG equivalent to 10% of the PO value (including GST) valid for a period of 24 months from the date of Commissioning or 30 months from the date of receipt, whichever is earlier plus 3 months claim period.

25.02 Bank guarantee shall be drawn in favour of BSES Yamuna Power Ltd as applicable. The performance Bank guarantee shall be in the format specified by BYPL.

26.0 Forfeiture

26.01 Each Performance Bond established under Clause 25.0 shall contain a statement that it shall be automatically and unconditionally forfeited without recourse and payable against the presentation by BYPL of this Performance Bond, to the relevant bank referred to above, together with a simple statement that supplier has failed to comply with any term or condition outlined in the Contract.

26.02 Each Performance BG established under will be automatically and unconditionally forfeited without recourse if BYPL in its sole discretion determines that supplier has failed to comply with any term or condition outlined in the contract.

27.0 Release

27.01 All Performance Bonds will be released without interest within seven (7) days from the last date up to which the Performance Bond has to be kept valid (as defined in Clause 25.0) except for the case outlined in Clause 26.0.

28.0 Defects Liability Period/Guarantee/Warranty

28.01 The bidder is to Guarantee the materials/items supplied against any defect or failure, which arises due to faulty materials, workmanship or design for the entire defects liability period. The Defect liability period shall be 60 months from the date of commissioning or 66 months from the date of delivery at store(s)/site(s), whichever is earlier.

28.02 If during the Defects Liability Period, any GOODS are found to be defective, they shall be promptly replaced or rectified by BIDDER at its own cost (including the cost of dismantling and (reinstallation) on the instructions of BUYER and if removed from SITE for such purpose, shall be removed and re-delivered to SITE by BIDDER at its own cost.

29.0 Return, Replacement or Substitution

29.01 BYPL shall give Supplier notice of any defective Commodity promptly after becoming aware thereof. BYPL may at its discretion elect to return defective Commodities to Supplier for replacement, free of charge to BYPL, or may reject such Commodities and purchase the same or similar Commodities from any third party. In the latter case, BYPL shall furnish proof to Supplier of the cost of such substitute purchase. In either case, all costs of any replacement, substitution, shipping, labour and other related expenses incurred in connection with the return and replacement or for the substitute purchase of a Commodity hereunder should be for the account of Supplier. BYPL may set off such costs against any amounts payable by BYPL to Supplier. Supplier shall reimburse BYPL for the amount, if any, by which the price of a substitute Commodity exceeds the price for such Commodity as quoted in the Bid. BUYER at its sole discretion shall have the opinion to dispose of the material or GOODS so rejected and not taken back within forty-five days from the date of intimation of rejection.

30.0 Time - The Essence Of Contract

30.01 The time and the date of completion of the "Supply" as stipulated in the Letter Of Acceptance/Purchase order issued to the Supplier shall be deemed to be the essence of the "Contract". The Supply has to be completed not later than the aforesaid Schedule and date of completion of supply.

31.0 Penalty for Delay

31.01 If supply of items/equipments is delayed beyond the supply schedule as stipulated in the purchase order then the Supplier shall be liable to pay to the Purchaser as penalty for delay, a sum of 1% (one percent) of the basic (ex-works) price for every week delay of undelivered units or part thereof for individual milestone deliveries.

31.02 The total amount of penalty for delay under the contract will be subject to a maximum of ten percent (10%) of the basic (ex-works) price of total undelivered units.

31.03 The Purchaser may, without prejudice to any method of recovery, deduct the amount for such damages from any amount due or which may become due to the Supplier or from the Performance Bond or file a claim against the supplier.

31.04 If the Penalty is levied as per the Order terms & conditions; BYPL will raise the Invoice for the penalty amount along with applicable GST rates. Accordingly, after setting off the penalty Invoice amount, net payment shall be made.

32.0 Recoveries

32.01 Whenever under this contract any money is recoverable from and payable by the Vendor, the purchaser shall be entitled to recover such sum by appropriating in part or in whole by detecting any sum due to which any time thereafter may become due from the supplier in this contract. Should the sum be not sufficient to cover the full amount recoverable the Vendor shall pay to the purchaser on demand the remaining balance.

33.0 The Micro, Small and Medium Enterprises (MSME)

33.01 If the VENDOR establishment is covered under the purview of The Micro, Small and Medium Enterprises Development Act, 2006 and its amendments, he shall declare so within the bid of its status failing which it will be presumed that it is a non-MSME unit. Also, submit a copy of Udyog Aadhaar (UA) & Udyam Registration Number with Pan no. mentioned.

34.0 Transfer and Sub-Letting

34.01 The Supplier shall not sublet, transfer, assign or otherwise part with the Contract or any part thereof, either directly or indirectly, without prior written permission of the Purchaser.

34.02 Notwithstanding the subletting / subcontracting of any portion of the works, supplier shall remain wholly responsible for the carrying out, completion and satisfactory execution of Works in all respects in accordance with the Purchase Order, specification, approved drawings and data sheets.

35.0 Intellectual Property Rights and Royalties

35.01 The Supplier shall indemnify the Purchaser and the Purchaser's Representative from and against all claims and proceedings on account of infringement (or alleged infringement) of any patent rights, registered designs, copyright, design, trademark, trade name, know-how or other intellectual property rights (hereinafter collectively referred to as "**Intellectual Property Rights**") in respect of the Works, Supplier's Equipment, machines, Works method, Plant, Materials, or anything whatsoever required for the execution of the Works and from and against all claims, demands, proceedings, damages, costs, charges and expenses whatsoever in respect thereof or in relation thereto. In the event of an infringement of any Intellectual Property Rights of any third party as a result of the execution of the Works (or any part thereof) by the Supplier, the Supplier shall rectify, modify or replace, at its own cost, the Works, Plant or Materials or anything whatsoever required for the Works so that infringement ceases to exist or, in the alternative, the Supplier shall procure

necessary rights/ licenses from the affected third party so that there is no infringement of Intellectual Property Rights.

35.02 The Supplier shall be promptly notified of any claim made against the Purchaser. The Supplier shall, at its cost, conduct negotiations for the settlement of such claim, and any litigation or arbitration that may arise from it. The Purchaser or the Purchaser's Representative shall not make any admission that might be prejudicial to the Supplier unless the Supplier has failed to take over the conduct of the negotiations, litigation or arbitration within a reasonable time after having been so requested. In the event of the Supplier failing to act at the Purchaser's Representative's notice, the Purchaser shall be at full liberty to deduct any such amount of pending claim from any amount due to the Supplier under the Contract or any other contract and the balance portion of claim shall be treated as debt due from the Supplier.

35.03 All Intellectual Property Rights in respect of any Plant, Materials, Drawings and Designs, plans, documents, specifications, data, materials, know-how, charts, information, etc., provided to the Supplier by the Purchaser pursuant to this Contract for the execution of the Works, belongs to and shall continue to belong to the Purchaser and the Supplier shall not have any rights in the same other than the limited right for its use for the purpose of execution of the Works.

35.04 Intellectual Property Rights in respect of any Plant, Materials, Drawings and Designs, plans, calculations, drawings, documents, know-how and information relating to the Works which are proprietary to the Supplier and/ or its third-party licensors ("**Supplier's IPR**") shall continue to vest with the Supplier and/ or its third-party licensors and the Supplier shall grant and/ or procure from its third party licensors, at its own cost, a worldwide, perpetual, royalty-free, non-exclusive license (along with the right to sub-license) to use and reproduce such Supplier's IPR for the use, operation, maintenance and repair of the Works.

35.05 If any patent, trademark, trade name, registered design or software is developed by the Supplier or its SubSupplier specifically for the execution of the Works, then all Intellectual Property Rights in respect of such design, trademark, trade name or software shall be the absolute property of the Purchaser and shall not be utilized or retained by the Supplier (or its SubSuppliers) for any purpose other than with the prior written consent of the Purchaser.

35.06 If the Supplier uses proprietary software (whether customized or off the shelf) for the purpose of storing or utilizing records in relation to the Works, the Supplier shall obtain at its own expense, the grant of a worldwide, royalty-free, perpetual licence or sublicence (including the right to sublicense) to use such software, in favour of the Purchaser provided that the use of such software under the licence or the sublicense may be restricted to use any such software only for the design, construction, reconstruction, manufacture, installation, completion, reinstatement, extension, repair and operation of the Works or any part thereof.

35.07 If any software is used by the Supplier for the execution of the Works over which the Supplier or a third party holds pre-existing title or other rights, the Supplier shall obtain for the Purchaser, a worldwide, royalty-free, perpetual license for the right to use and apply that software (together with any modifications, improvements and developments thereof).

36.0 Vendor Code of Conduct

36.01 Vendor confirms to have gone through the Policy of BYPL on legal and ethical code required to be followed by Vendors encapsulated in the "Vendor Code of Conduct" displayed on the official website of BYPL (www.bsesdelhi.com) also, which shall be treated as a part of the agreement/contract/PO/WO.

36.02 Vendor undertakes that he shall adhere to the Vendor Code of Conduct and also agrees that any violation of the Vendor Code of Conduct shall be treated as breach of the agreement/contract/PO/WO.

36.03 In event of any such breach, irrespective of whether it causes any loss/damage, company (BYPL) shall have the right to recover loss/damage including liquidated damages from Vendor .

36.04 The Vendor hereby indemnifies and agrees to keep indemnified the company (BYPL) against any claim/litigation/liability/penalty including litigation cost arising out of any violation of Vendor Code of Conduct by the Vendor or its officers, agents & representatives etc.

37.0 Limitation of Liability

37.01 Except for willful misconduct or gross negligence, neither Party shall be liable to the other Party for loss of use of any Works, loss of profit, loss of any contract or any other indirect or consequential loss or damage which may be suffered by the other Party in connection with the Contract. The total liability of the Supplier to the Purchaser under the Contract shall not exceed the Contract Value. Except that this Clause shall not limit the liability of the Supplier:

(a) In cases of fraud, willful misconduct or illegal or unlawful acts, or

(b) In cases of acts or omissions of the Supplier that are contrary to the most elementary rules of diligence that a conscientious Supplier would have followed in similar circumstances.

38.0 Liability of Suppliers

38.01 Subject to the due discharge of its obligations under the Contract and except in case of gross negligence or willful misconduct on the part of the Supplier or on the part of any person acting on behalf of the Supplier, with respect to any loss or damage caused by the Supplier to the Purchaser's property or the Site, the Supplier shall not be liable to the Purchaser for the following:

(a) For any indirect or consequential loss or damage; and

(b) For any direct loss or damage that exceeds:

(i) The total payments made and expected to be made to the Supplier under the Contract including reimbursements, if any; or

(ii) The insurance claim proceeds that the Supplier may be entitled to receive from any insurance purchased by the Supplier to cover such a liability, whichever is higher.

38.02 This limitation of liability shall not affect the supplier's liability, if any, for damage to third-party property or injury or death of a person due to negligence of the Contractor or any Person or firm acting on behalf of the supplier in executing the order.

38.03 Notwithstanding anything contained in the Contract, the Supplier shall not be liable for any gross negligence or willful misconduct on the part of the Purchaser or any of its affiliates, any vendor, or any party, other than Supplier and/or, its directors, officers, agents or representatives or its affiliates, or SubSupplier, or the vendor or any third party engaged by it.

38.04 Notwithstanding anything contained in the Contract, including but not limited to approval by the Purchaser of any drawings, documents, vendor list, supply of information or data or the participation of the Purchaser in any meeting and/or discussion or otherwise, shall not absolve the Supplier from any of its liabilities or responsibilities arising in relation to or under the Contract.

39.0 Indemnification

39.01 Notwithstanding contrary to anything contained in this RFQ, Supplier shall at his costs and risks make good any loss or damage to the property of the Purchaser and/or the other Supplier engaged by the Purchaser and/or the employees of the Purchaser and/or employees of the other Supplier engaged by the Purchaser whatsoever arising out of the negligence of the Supplier while performing the obligations under this contract.

40.0 Events of Default

40.01 Events of Default. Each of the following events or occurrences shall constitute an event of default ("Event of Default") under the Contract:

(a) Supplier fails or refuses to pay any amounts due under the Contract;

(b) Supplier fails or refuses to deliver Commodities conforming to this RFQ/ specifications, or fails to deliver Commodities within the period specified in P.O. or any extension thereof

(c) Supplier becomes insolvent or unable to pay its debts when due, or commits any act of bankruptcy, such as filing any petition in any bankruptcy, winding-up or reorganization proceeding, or acknowledges in writing its insolvency or inability to pay its debts; or the Supplier's creditors file any petition relating to bankruptcy of Supplier;

(d) Supplier otherwise fails or refuses to perform or observe any term or condition of the Contract and such failure is not remediable or, if remediable, continues for a period of 30 days after receipt by the Supplier of notice of such failure from BYPL.

41.0 Consequences of Default.

(a) If an Event of Default shall occur and be continuing, BYPL may forthwith terminate the Contract by written notice.

(b) In the event of an Event of Default, BYPL may, without prejudice to any other right granted to it by law, or the Contract, take any or all of the following actions;

(i) present for payment to the relevant bank the Performance Bond;

(ii) purchase the same or similar Commodities from any third party; and/or

(iii) recover any losses and/or additional expenses BYPL may incur as a result of Supplier's default.

42.0 Force Majeure

42.01 General

An "Event of Force Majeure" shall mean any event or circumstance not within the reasonable control directly or indirectly, of the Party affected, but only if and to the extent that:

(i) Such event or circumstance materially and adversely affects the ability of the affected Party to perform its obligations under this Contract, and the affected Party has taken all reasonable precautions, due care and reasonable alternative measures to prevent or avoid the effect of such event on the affected party's ability to perform its obligations under this Contract and to mitigate the consequences thereof.

(ii) For the avoidance of doubt, if such event or circumstance would not have materially and adversely affected the performance of the affected party had such affected party followed good industry practice, such event or circumstance shall not constitute force majeure.

(iii) Such event is not the direct or indirect result of the failure of such Party to perform any of its obligations under this Contract.

(iv) Such Party has given the other Party prompt notice describing such events, the effect thereof and the actions being taken to comply with the above clause.

42.02 Specific Events of Force Majeure subject to the provisions of above clause, Events of Force Majeure shall include only the following to the extent that they or their consequences satisfy the above requirements :

(i) The following events and circumstances :

a) Effect of any natural element or other acts of God, including but not limited to storm, flood, earthquake, lightning, cyclone, landslides or other natural disasters.

b) Explosions or fires

(ii) War declared by the Government of India.

(iii) Dangers of navigation, perils of the sea.

Note: Causes like power breakdowns/strikes, accidents etc do not fall under Force Majeure.

42.03 Notice of Events of Force Majeure If a force majeure event prevents a party from performing any obligations under the Contract in part or in full, that party shall:

i) Immediately notify the other party in writing of the force majeure events within 7(seven) working days of the occurrence of the force majeure event

ii) Be entitled to suspend performance of the obligation under the Contract which is affected by force majeure event for the duration of the force majeure event.

iii) Use all reasonable efforts to resume full performance of the obligation as soon as practicable

iv) Keep the other party informed of all such efforts to resume full performance of the obligation on a regular basis.

v) Provide prompt notice of the resumption of full performance or obligation to the other party.

42.04 Mitigation of Events of Force Majeure Each Party shall:

(i) Make all reasonable efforts to prevent and reduce to a minimum and mitigate the effect of any delay occasioned by an Event of Force Majeure including recourse to alternate methods of satisfying its obligations under the Contract;

(ii) Use its best efforts to ensure resumption of normal performance after the termination of any Event of Force Majeure and shall perform its obligations to the maximum extent practicable as agreed between the Parties; and

(iii) Keep the other Party informed at regular intervals of the circumstances concerning the event of Force Majeure, with best estimates as to its likely continuation and what measures or contingency planning it is taking to mitigate and or terminate the Event of Force Majeure.

42.05 Burden of Proof In the event that the Parties are unable in good faith to agree that a Force Majeure event has occurred to an affected party, the Parties shall resolve their dispute in accordance with the provisions of this Agreement. The burden of proof as to whether or not a force majeure event has occurred shall be upon the party claiming that the force majeure event has occurred and that it is the affected party.

42.06 Termination for Certain Events of Force Majeure. If any obligation of any Party under the Contract is or is reasonably expected to be delayed or prevented by a Force Majeure event for a continuous period of more than 3 months, the Parties shall promptly discuss in good faith how to proceed with a view to reaching a solution on mutually agreed basis. If a solution on mutually agreed basis cannot be arrived at within a period of 30 days after the expiry of the period of three months, the Contract shall be terminated after the said period of 30 days and neither Party shall be liable to the other for any consequences arising on account of such termination.

The Purchaser may terminate the contract after giving 7 (seven) days' notice if any of the following occurs:

i. Bidder fails to complete the execution of works within the approved schedule of works, terms and conditions.

ii. In case the Bidder commits any Act of Insolvency, or is adjudged insolvent
iii. Has abandoned the contract
iv. Has failed to commence work or has suspended the progress of works
v. Has failed to proceed with the works with due diligence and failed to make such due progress

42.07 Limitation of Force Majeure event. The Supplier shall not be relieved of any obligation under the Contract solely because the cost of performance is increased, whether as a consequence of adverse economic consequences or otherwise.

42.08 Extension of Contract Period due to Force Majeure event The Contract period may be extended by mutual agreement of Parties by way of an adjustment on account of any period during which an obligation of either Party is suspended due to a Force Majeure event.

42.09 Effect of Events of Force Majeure. Except as otherwise provided herein or may further be agreed between the Parties, either Party shall be excused from performance and neither Party shall be construed to be in default in respect of any obligations hereunder, for so long as the failure to perform such obligations shall be due to an event of Force Majeure."

43.0 SEVERABILITY

43.01 If any provision of this Agreement is or becomes invalid or unenforceable by the courts of any jurisdiction to which it is subject, such invalidity or unenforceability shall not prejudice the remaining provisions of this Agreement, which shall continue in full force and effect.

44.0 Waiver of Rights

44.01 Failure to enforce any condition herein contained shall not operate as a waiver of the condition itself or any subsequent breach thereof.

45.0 Termination for convenience of Purchaser

45.01 Purchaser at its sole discretion may terminate the contract by giving 30 days prior notice in writing or through email to the Supplier. Purchaser shall pay the Supplier for all the supplies/ services rendered till the actual date of contract termination against submission of invoice by the Supplier to that effect.

45.02 Payment of such compensation is the sole and exclusive remedy of the supplier for termination of this Agreement by Purchaser hereunder and the supplier shall not be entitled to, and hereby waives, claims for lost profits and all other damages and expenses.

45.03 Supplier hereby agrees that substantiation for settlement of any claims submitted by supplier shall be complete and in sufficient detail to allow Purchaser's evaluation. Terminate all sub-contracts except those that have been/ to be assigned to the Purchaser all rights, titles and benefits of the Suppliers/Vendor as the case may be.

46.0 Entire Agreement

46.01 This Agreement hereto contains the complete understanding between BYPL and VENDOR with respect to the matters contained herein and supersedes all other agreements, whether written or oral with respect to the matters contained herein.

47.0 Amendment

47.01 Any modification, amendment or other change to this Agreement shall be affected only by a written instrument signed by the authorized representatives of both BYPL and VENDOR.

48.0 Notice & Communication

48.01 Any notice or other formal communication to be given under this agreement shall be in writing and signed by or on behalf of the party giving it and shall be sent by registered post, A.D. to the addresses of Vendor or BYPL as mentioned herein above or to any other addresses as agreed by the parties, in writing from time to time.

48.02 Any notice or other formal communication can also be sent through the official e-mail ID of the authorized person of the Vendor or BYPL.

48.03 All communications, correspondence, and documentation related to the Purchase Order shall be directed as specified.

49.0 Cleanliness

49.01 All debris shall be removed and disposed of at assigned areas on daily basis. Surplus excavated earth shall be disposed of in an approved manner. In short, you shall be fully responsible for keeping the work site clean at all times. In case of non- compliance, company shall get the same done at Contractor's risk and costs.

50.0 Commissioning & Acceptance Test

50.01 After completion of the work, the Contractor shall conduct trial run/ operation in the presence of the Engineer In charge. During such trial run the system shall be operated under the supervision of the Contractor. If any rectification/modification is required during this period the Contractor shall do all necessary measures.

On satisfactory completion of the above, the system shall be deemed to have energized and placed in commercial operation. The Engineer In Charge will issue an acceptance certificate.

51.0 Work Completion Certification, Handing Over

51.01 The work carried out by the Contractor under this order has to be certified by Engineer In-charge for satisfactory completion of work allotted to the contractor with respect to specifications / Field Quality Procedures as per applicable standards. In case of modification/correction to be carried out, contractor shall carry out the said modifications/correction without additional cost. The Contractor shall remain in close contact with Engineer In-Charge at site to report the general findings of the fieldwork during the initial as well as later stages of the work at the site.

52.0 Safety Code

52.01 The Contractor shall ensure adequate safety precautions at site as required under the law of the land and shall be entirely responsible for the complete safety of their workman as well as other workers at site and premises. The contractor shall not deploy any worker below the age of 18 years.

Safety-related requirements as mentioned in our safety Manual put on the Company's website which can be accessed at https://www.bsesdelhi.com.

All contractors shall strictly abide by the guidelines provided in the safety manual at all relevant stages during the contract period.

The contractor shall observe the safety requirements as laid down in the safety manual/contract and in case of sub-contract (only after written approval of company), it shall be the responsibility of main contractor that all safety requirements are followed by the employees and staff of the sub-contractor.

The contractor employing two hundred employees or more, including contract workers, shall have a safety coordinator to ensure the implementation of safety requirements of the contract and a contractor with lesser number of employees, including contract workers, shall nominate one of his employees to act as safety co-ordinator who shall liaise with the safety officer on matters relating to safety and his name shall be displayed on the notice board at a prominent place at the work site.

The contractor shall be responsible for non-compliance of the safety measures, implications, injuries, fatalities and compensation arising out of such situations or incidents.

In case of any accident, the contractor shall immediately submit a statement of the same to the owner and the safety officer, containing the details of the accident, any injury or casualities, the extent of property damage and remedial action is taken to prevent recurrence and in addition, the contractor shall submit a monthly statement of the accidents to the owner at the end of each month.

53.0 Statutory Obligations

53.01 The Contractor shall take all steps as may be necessary to comply with various Acts, Rules, including but not limited to The Child Labour (Prohibition & Regulation) Act, 1986, The Contract Labour (Regulation & Abolition) Act, 1970. The Employees Pension Scheme, The Employees Provident Funds and miscellaneous provisions Act, 1952 ,The Employees State Insurance Act,1948,The Equal Remuneration Act, The Industrial Dispute Act,1947, The Maternity Benefit Act , 1961, The Minimum Wages Act, 1948, The payment of Bonus Act ,1965, The Payment of Gratuity Act,1972, The Payment of wages Act, 1936, The Shops & Establishment Act, The Workmen's Compensation Act , 1923, Building and Other Construction Workers (Employment and Regulations) Act 1996, Building and Other Construction Workers (Cess) Act 1996, The Employers Liability Act,1938, Indian Electricity Act, 2003 and Indian Electricity Rules, VAT and Service tax etc., and all other applicable laws as amended and rules framed there under including any statutory approval required from the Central/State Govt. Ministry of Labour. Broadly, the compliance shall be as detailed below, but not limited to:

a) An Electrical license.
b) PF Code No. and all employees to have PF A/c No. under PF every Act, 1952.
c) All employees to have a temporary or permanent ESI Card as per ESI Act.
d) ESI Registration No.
e) Sales Tax registration number, if applicable.
f) PAN No.
g) Work Contract Tax Registration Number/ VAT Registration.
h) Labour License under Contract Labour Act (R & A) Act 1970.
i) Delhi Building and Other Construction Worker (Regulation of Employment and Conditions of Services) Rules, 2002(B.O.C.W.)

(Bidder responsible for execution of the job should obtain a copy of Labour License before start of the work by the contractor.)

The Contractor must follow:

a) Third party Insurance Policy before start of work.
b) To follow Minimum Wages Act prevailing in the state.

c) The Salary/wages to all deployed manpower is to be distributed through ECS only into the bank accounts of all individuals and not later than 7th of succeeding month. In case of unavoidable circumstances the payment may be made through crossed cheques in the name of the individual and information of all such cases need to be submitted to HR(CMC).
d) To maintain Wage- cum - Attendance Register.
e) To maintain First Aid Box at Site.
f) Latest P.F. and E.S.I. challans pertaining to the period in which work was undertaken along with a certificate mentioning that P.F. and E.S.I. applicable to all the employees has been deducted and deposited with the Authorities within the time limits specified under the respective Acts.
g) Workman Compensation Policy. {If applicable}.
h) Labour license before start of work. {If applicable}.

Before commencing the work it would be mandatory for the Contractor to furnish the Company the permanent PF code no and ESI of the employees.

54.0 Workman Compensation

54.01 The Contactor shall take insurance policy under the Workman Compensation Act to cover such workers who are not covered under ESI and PF by the Contractor however engaged to undertake the jobs covered under this order and a copy of this insurance policy will be given to Company for reference and records. This insurance policy shall be kept valid at all times. In case there are no worker involve other than those who are covered under ESI and PF by the Contractor, the Contractor shall certify for the same.

The contractor shall keep the company indemnified at all times, against all claims of compensation under the provision of Workmen Compensation Act 1923 and as amended from time to time or any compensation payable under any other law for the time being workman engaged by the contractor/sub-contractor/sub-agent in carrying out the job involved under this work order and against costs and expenses, if any, incurred by the company in connection therewith and without prejudice to make any recovery.

The company shall be entitled to deduct from any money due to or to become due to the Contractor, moneys paid or payable by way of compensation as aforesaid or cost or expenses in connection with any claims thereto and the Contractor shall abide by the decision of the Company as to the sum payable by the Contractor under the provisions of this clause.

55.0 Staff And Workman

(I) It shall be responsibility of contractor:

(a) To obtain Contract Labour License from the concerned authorities and maintain proper liaison with them. Necessary Forms for obtaining Labour License would be issued by the company. However you will bear all expenses for obtaining Labour license and registration in PF Department for your scope of work. You will deposit PF of your staff/laborer each month and all related documents should be furnished to us.
(b) To obtain workman insurance cover against deployment of workers etc.

(II) To maintain, proper records relating to workmen employed, in the form of various Registers, namely.

(a) Register of workmen.
(b) Register of muster roll.
(c) Register of overtime.
(d) Register of wages.
(e) Any other register as per latest amendment Labour Act.

(III) To disburse monthly wages to your workers/ supervisors in time and in the presence of Company representatives or as directed by the Labour authorities.

(IV) To maintain proper liaison with the Project authorities, local police and all other government and local bodies.

(V) To pay your workmen at least not less than the minimum prescribed wages as per state/Central Labour laws as may be, applicable. The contractor shall, be responsible for compliance of all the provisions of Minimum Wages Act, PF, ESIC Act workmen Compensation Act and Contract Labour Regulation & Abolition Act the rules made there under. In case of non- Compliance of the statutory requirements. The company would take necessary action at the risk and cost of the Contractor.

(VI) To employ required number of skilled/semi-skilled and unskilled workmen as per site requirement to complete the entire project as per schedule. To provide safety shoes, safety helmets, safety belts, gloves etc. to your worker/staff as per requirement during erection work.

(VII) To employ necessary engineering and supervisory staff for completion of the Project in time. While day-to-day management of the site and supervision of the works shall be the responsibility of your Engineer - In charge, he will report to the our Engineer in charge to assist him to discharge the overall responsibility of the execution of the project.

56.0 Third Party Insurance

56.01 Before commencing the execution of the work the Bidder shall take third party insurance policy to insure against any damage or loss or injury which may occur to any property / public property or to any person or any employee or representative of any outside Agency/ the company engaged or not engaged for the work of the company, by or arising out of the execution of the work or temporary work or in carrying out of this Agreement. For third party insurance policies, the Bidder shall be responsible for settlement of claims with the underwriters without any liability on the purchaser / owner and will arrange replacements / rectification expeditiously without a waiting settlement by insurance claim at Bidder's own cost.

57.0 Environmental, Health & Safety Plan

57.01 Contractor will make ensure that the Environment, Health & Safety (EHS) requirements are clearly understood and faithfully implemented at all levels at site as per instruction of Company. Contractors must comply with these requirements:

a) Comply with all of the elements of the EHS Plan and any regulations applicable to the work.
b) Comply with the procedures provided in the interests of Environment, Health and Safety.
c) Ensure that all of their employees designated to work are properly trained and competent.
d) Ensure that all plant and equipment they bring on to site has been inspected and serviced in accordance with legal requirement and manufacturer's or suppliers' instructions.
e) Make arrangements to ensure that all employees designated to work on or visit the site present themselves for site induction before the commencement of work.
f) Provide details of any hazardous substances to be brought onsite.
g) Ensure that a responsible person accompanies any of their visitors to site.

All contractor's staff are accountable for the following:

1. Use the correct tools and equipment for the job and use safety equipment and protective clothing supplied, e.g. helmets, goggles, ear protection, etc. as instructed.
2. Keep tools in good condition.
3. Report to the Supervisor any unsafe or unhealthy condition or any defects in plant or equipment.
4. Develop a concern for safety for themselves and for others.

5. Prohibit horseplay.
6. Not to operate any item of plant unless they have been specifically trained and are authorized to do so.

58.0 Test Certificate & Quality Assurance

58.01 The Contractor shall procure all equipment from genuine sources as approved by the Company and as per Company specifications. The Contractor shall submit all the test certificates and joint inspection reports related to major equipment wherever applicable. The contractor shall ensure for the strict compliance with the specifications and Field Quality Procedures issued by company / Engineer in-charge.

59.0 Measures Related To The Tree Pruning, Excavation Near Tree And Construction & Demolition

59.01 Notwithstanding anything stated in the tender document, work contract or any other communication issued related to the performance of the work order awarded, it is clarified that the vendor and its associate/employees/worker, during the performance of work under this tender, shall ensure full compliance of the provisions of all environment laws/rules/directions by any authority including judicial authority/ regulation related to excavation near tree and construction & demolition activity, and shall mandatorily comply the following instructions:

A. <u>Tree Pruning, Planning, Installation and Maintenance of Utility Apparatus in proximity to trees shall be done mandatorily by ensuring the following prescribed measures:</u>

1) No excavation work shall be done within two (2) meters of the Tree Trunk.
2) Any exposed roots beyond 2 meters of the tree trunk, should be protected with dry sacking and backfilling must be done with a suitable manure mixture and/or the compost material mix as soon as possible on the completion of the works.
3) For any excavation to be carried out beyond the **prescribed distance of 2 meters but within 3 meter** from the tree trunk, **manual methods (by use of hand)** or by using trenchless techniques shall be preferred over use of a mechanical excavation.
4) No roots shall be cut during the excavation work.
5) Not to lean any materials against or chain mechanical plants to the trunk of the trees.
6) Avoid any soil contamination from oil, gasoline, paint and paint thinner or other chemicals.
7) No concrete or construction or repairing work shall be done at least within two (2) meter radius of the trunk of trees.
8) All the electric wires and high tension cables and other apparatus relating to supply of electricity shall permanently be removed from the trees branches.

<u>Records to be maintained by the supervisor to demonstrate adherence to the guidelines for excavation in Proximity to the Trees:</u>

1) Ensure pre and post photography and videography of the site demarcated for the excavation work and the same shall not be deleted/removed until securing the prior permission of the Circle head O&M.
2) While digging and upon exposure to the roots– take immediate photographs of the same and report the matter to senior officers for further guidance.
   If any unauthorized layering of other cables is being carried out at the digging site by some other agency/person, then immediately capture photographs of the same and inform the

seniors, who shall take suitable legal actions, if required, which includes intimating to tree officer about such unauthorized laying of wires by such agency.

B. <u>DUST MITIGATION MEASURES FOR CONSTRUCTION & DEMOLITION ACTIVITIES</u>

Any construction/demolition/excavation related activity performed in furtherance of the performance of work under award, be undertaken only after ensuring the Dust Mitigation Measures prescribed as follows:

1) Dust/wind breaking walls of appropriate height around the periphery of the construction site.
2) Installation of Anti Smog Gun(s) (for >20,000 m2 built up area).
3) Tarpaulin or green net on scaffolding around the area under-construction and the building.
4) All vehicles including carrying construction material and construction debris of any kind should be cleaned and wheels washed.
5) All vehicles carrying construction material and construction debris should be fully covered and protected.
6) All construction debris and construction material of any kind should be stored on the site and not dumped on public roads or pavements.
7) No loose soil or sand or Construction & Demolition Waste or any other construction material which may cause dust, shall not be left uncovered.
8) No grinding and cutting of building materials in open area. Wet jet should be used in grinding and stone cutting.
9) Unpaved surfaces and areas with loose soil should be adequately sprinkled with water to suppress dust.
10) Roads leading to or at construction sites must be paved and blacktopped i.e., metallic roads (for >20,000 m2 built up area).
11) Construction and demolition waste should be recycled on-site or transported to authorized recycling facility and due record of the same should be maintained.
12) Every worker working on construction site and is involved in loading, unloading and carriage of construction material and construction debris should be provided with dust-mask to prevent inhalation of dust particle.
13) Arrangement should be provided for medical help, investigation and treatment to workers involved in the construction of building and carry of construction material and debris relatable to dust emission.
14) Dust mitigation measures shall be displayed prominently at the construction site for easy public viewing.
15) Ensure the compliance of all dust control measure.

It is clarified that BYPL has zero tolerance with respect to the non-compliance/breach of environment laws/rules/directions by any authority including judicial authority/ regulation. Accordingly, in case of breach by the vendor/its associate/employee/worker to the laws/rules as detailed above, shall be termed as serious breach to the terms of work order and BYPL shall be free to take all actions against vendor for such breach of contract including the termination of the said contract. Additionally, the vendor shall also be liable to indemnify BYPL/its Directors/Officers/Employees/Associates in full including the payment of all loss/penalties/compensation including environment compensation as imposed by any judicial/quasi-judicial citing/alleging such breach.

The vendor shall also be under a mandate to provide an Undertaking to BYPL, which includes that the excavation, tree pruning, construction and demolition work, if performed by such vendor, the same shall be in strict adherence of all environment laws/rules/directions by any authority including judicial authority/ regulation and all the measures provided in work order/tender under the head/title "**Measures related to the Tree Pruning, excavation near tree and construction & demolition**".

60.0 Acceptance

60.01 Vendor confirms to have gone through the Policy of BYPL on legal and ethical code required to be followed by vendors encapsulated in the "Vendor Code of Conduct" displayed on the official website of BYPL (www.bsesdelhi.com) also, which shall be treated as a part of the contract/PO/WO.
The vendor undertakes that he shall adhere to the Vendor Code of Conduct and also agrees that any violation of the Vendor Code of Conduct shall be treated as breach of the contract/PO/WO.
In the event of any such breach, irrespective of whether it causes any loss/damage, Purchaser (BYPL) shall have the right to recover loss/damage from Vendor.
The Contractor/Vendor hereby indemnifies and agrees to keep indemnified the Purchaser (BYPL) against any claim/litigation arising out of any violation of Vendor Code of Conduct by the Contractor/Vendor or its officers, agents & representatives etc.

60.02 Acceptance of the CONTRACT implies and includes acceptance of all terms and conditions enumerated in the CONTRACT in the technical specification and drawings made available to Contractor consisting of general conditions, detailed scope of work, detailed technical specification, detailed equipment drawing and complete scope of work.

60.03 Bidder and Company contractual obligations are strictly limited to the terms set out in the CONTRACT. No amendments to the concluded CONTRACT shall be binding unless agreed to in writing for such amendment by both parties.

60.04 We expect your services and supplies to be aligned to our Vision, Mission and Values. Please refer to the following link to know about our Vision, Mission and Values; https://www.bsesdelhi.com/web/bypl/about-bses.

BSES

QUANTITY AND DELIVERY REQUIREMENTS

Sl. No.	BYPL SAP Code	Item Description	Specification	Total Qty. (LS)	Tentative Delivery Schedule	Destination
1	-	Survey, Design, Supply, Installation, Testing, Commissioning of Scada Communicable FPI System at various substations in BYPL	BYPL-SOW-CFPI-25-26-04-R0 & SP-CFPI-208-R0	LS as per Scope of Supply & Work	Delivery shall be completed within 03 Months from the LOI/PO date or completion as per the schedule provided by BYPL. ITC at each site shall be completed within 30 days from the date of issue or order / intimation of site	Delhi Store(s)/ Site(s)

The delivery schedule shown above is tentative. PO(s) will be released as per the actual requirement. However, the supplier has to deliver the material within the delivery schedule provided.

Schemes may be executed in a phased manner.

BSES

APPENDIX II

ANNEXURE – 2.01

FORMAT OF PERFORMANCE BANK GUARANTEE
(To be executed on a Non-Judicial Stamp Paper of appropriate value)

This Guarantee made at _____ this [___] day of [_____] 20XX

1. WHEREAS M/s BSES Yamuna Power Limited, a Company incorporated under the provisions of Companies Act, 1956 having its Registered Office at Shaktikiran Building, Karkardoa, Delhi 110032, India hereinafter referred to as the " Owner ", (which expression shall unless repugnant to the context or meaning thereof include its successors, administrators, executors and assigns).

2. AND WHEREAS the Owner has entered into a contract for _____(Please specify the nature of contract here) vide Contract No. _____dated _____(hereinafter referred to as the "Contract") with M/s._____, (hereinafter referred to as "the Supplier", which expression shall unless repugnant to the context or meaning thereof be deemed to mean and include each of their respective successors and assigns) for providing services on the terms and conditions as more particularly detailed therein.

3. AND WHEREAS as per clause ____of Conditions of Contract, the Suppliers are obliged to provide to the Owners an unconditional bank guarantee for an amount equivalent to ten percent (10%) of the total Contract Value for the timely completion and faithful and successful execution of the Contract from **[_____]** *pl. specify the name of Bank)* having its head/registered office at **[_____]** through its branch in _____*(pl. specify the name of Branch through which B.G is issued)* hereinafter referred to as "the Bank", (which expression shall unless it be repugnant to the context or meaning thereof be deemed to include its successors and permitted assigns).

4. NOW THEREFORE, in consideration inter alia of the Owner granting the Suppliers the Contract, the Bank hereby unconditionally and irrevocably guarantees and undertakes, on a written demand, to immediately pay to the Owner any amount so demanded (by way of one or more claims) not exceeding in the aggregate [Rs.].....(*in words)* without any demur, reservation, contest or protest and/or without reference to the Supplier and without the Owner needing to provide or show to the Bank, grounds or reasons or give any justification for such demand for the sum/s demanded.

5. The decision of the Owner to invoke this Guarantee and as to whether the Supplier has not performed its obligations under the Contract shall be binding on the Bank. The Bank acknowledges

that any such demand by the Owner of the amounts payable by the Bank to the Owner shall be final, binding and conclusive evidence in respect of the amounts payable by the Supplier to the Owner. Any such demand made by the Owner on the Bank shall be conclusive and binding, notwithstanding any difference between the Owner and the Supplier or any dispute raised, invoked, threatened or pending before any court, tribunal, arbitrator or any other authority.

6. The Bank also agrees that the Owner at its option shall be entitled to enforce this Guarantee against the Bank as a principal debtor without proceeding against the Suppliers notwithstanding any other security or other guarantee that the Owner may have in relation to the Supplier's liabilities.

7. The Bank hereby waives the necessity for the Owner first demanding the aforesaid amounts or any part thereof from the Suppliers before making payment to the Owner and further also waives any right the Bank may have of first requiring the Owner to use its legal remedies against the Suppliers, before presenting any written demand to the Bank for payment under this Guarantee.

8. The Bank's obligations under this Guarantee shall not be reduced by reason of any partial performance of the Contract. The Bank's obligations shall not be reduced by any failure by the Owner to timely pay or perform any of its obligations under the Contract.

9. The Bank further unconditionally and unequivocally agrees with the Owner that the Owner shall be at liberty, without the Bank's consent and without affecting in any manner its rights and the Bank's obligation under this Guarantee, from time to time, to:

(i) vary and/or modify any of the terms and conditions of the Contract;

(ii) Forebear or enforce any of the rights exercisable by the Owner against the Suppliers under the terms and conditions of the Contract; or

(iii) Extend and/or postpone the time for performance of the obligations of the Suppliers under the Contract;

and the Bank shall not be relieved from its liability by reason of any such act or omission on the part of the Owner or any indulgence shown by the Owner to the Suppliers or any other reason whatsoever which under the law relating to sureties would, but for this provision, have the effect of relieving the Bank of its obligations under this Guarantee.

10. This Guarantee shall be a continuing bank guarantee and shall not be discharged by any change in the constitution or composition of the Suppliers, and this Guarantee shall not be affected or

discharged by the liquidation, winding-up, bankruptcy, reorganization, dissolution or insolvency of the Suppliers or any of them or any other circumstances whatsoever.

11. This Guarantee shall be in addition to and not in substitution or in derogation of any other security held by the Owner to secure the performance of the obligations of the Suppliers under the Contract.

12. NOTWITHSTANDING anything herein above contained, the liability of the BANK under this Guarantee shall be restricted to _____*(insert an amount equal to ten percent (10%) of the Contract Value)* and this Guarantee shall be valid and enforceable and expire on _____*(pl. specify date)* or unless a suit or action to enforce a claim under this Guarantee is filed against the Bank on or before the date of expiry.

13. On termination of this Guarantee, all rights under the said Guarantee shall be forfeited and the Bank shall be relieved and discharged from all liabilities hereunder.

14. The Bank undertakes not to revoke this Guarantee during its validity except with the prior written consent of the Owner and agrees that any change in the constitution of the Bank or the Suppliers shall not discharge our liability hereunder.

15. This Guarantee shall be governed by the laws of India. Any suit, action, or other proceeding arising out of, connected with, or related to this Guarantee or the subject matter hereof shall be subject to the exclusive jurisdiction of the courts of **Delhi,** India.

Dated this …… day of …….. …20XX at ……..

(Signature)

.....

(Name)

.....

(Designation with Bank Stamp)
Attorney as per
Power of Attorney No.....
Date.....

BSES

ANNEXURE – 2.02

BYPL BANK DETAIL WITH IFSC CODE:

1. Name of the Bank:	Axis Bank Limited
2. Branch Name & Full Address:	C-58, Basement & Ground Floor, Preet Vihar, Main Vikas Marg, New Delhi 110092
3. Branch Code:	055
4. Bank Account No:	911030003596085
5. IFSC Code:	UTIB0000055
6. Swift Code:	AXISINBB055

BSES

ANNEXURE – 2.03

FORMAT OF WARRANTY/GUARANTEE CERTIFICATE

BSES YAMUNA POWER LIMITED Shaktikiran Building, Karkardooma, Delhi -110032.

Ref. Purchase Order No. :

Dear Sir,

We hereby confirm that the.....dispatched to BSES YAMUNA POWER LTD vide invoice no..... DT.....is exactly of the same nature and description as per above mentioned Purchase Order.

We further confirm that we will replace/repair our.....free of cost if any manufacturing defect during.....months from the date of dispatch of material or.....months from the date of commissioning whichever is earlier.

Vendor Name & Signature

ANNEXURE – 2.04

UNDERTAKING GST

The Vendor shall give an undertaking in the following words on each invoice in the absence of which tax payment as on the Vendor's invoice may be withheld.

"The tax component as mentioned in the invoice shall be deposited with the GST Department as per law by way of actual payment or by way of legal set off as per law. The turnover billed shall be duly declared in my GST returns a copy of which shall be filed with the Purchaser. Should the input tax credit to the Purchaser be denied by way of any lapse on the part of the Vendor, the same shall be paid on demand and in any case the Purchaser is authorized to deduct the tax equivalent amount from the amount payable to the Vendor"

ANNEXURE – 2.05

SUMMARY OF COMMERCIAL TERMS AND CONDITIONS - SITC

SL NO	PARTICULARS	CLAUSE AS PER TENDER	BIDDER'S CONFIRMATION
1	Validity	Bid submitted shall remain valid for 120 days from the date of offer Submission.	
2	Price Basis	**"Firm"** on **FOR Delhi store/sites basis**. Prices must be inclusive of all applicable taxes and duties, freight, packing, forwarding, and all charges up to delivery at BYPL's designated site(s)/store(s) in Delhi. All tax components are to be computed in accordance with the prevailing GST regulations in India.	
3	Unloading	Unloading at stores/sites shall be in vendor's scope	
4	Transit Insurance	Transit insurance shall be in the vendor's scope.	
5	Payment Terms	**Supply:** **Part 1)** 90% of the basic value with 100% taxes and duties shall be paid in 45 days from the date of receipt and acceptance of GOODS at the store(s)/site(s) against submission of documents. **Part 2)** Balance of 10% of basic value shall be paid in 45 days from the date of successful testing, commissioning and handing over duly certified by BYPL Engineer-in-Charge. **Services:** 100% payment shall be due after 45 days of submission of your bills, from the date of successful testing, commissioning and handing over of the entire installation along with work completion certificate at our office.	
6	Delivery Schedule	- Vendor shall submit Transmittal Approval Documents (GTP/Drawings/QAP/etc.) within 15 days from the LOI/PO to the concerned BYPL officials. - BYPL shall review and either approve or provide comments on the submitted documents within 7 days of the initial submission. - If resubmission is required, vendor shall complete the resubmission within 5 days from the receipt of the comments. - For subsequent resubmissions, BYPL shall respond within 5 days. - Repeated rejections due to non-compliance is not desirable. - Delivery shall be completed within 03 Months from the LOI/PO date or completion as per the schedule provided by BYPL. - ITC at each site shall be completed within 30 days from the date of issue or order / intimation of site	
7	Defect Liability Period	60 months after commissioning or 66 months from the last date of dispatch, whichever is earlier.	
8	Penalty For Delay	1% (One) of the basic value (ex-works value) of undelivered units per week of delay or part thereof, subject to maximum of 10% (Ten) of the total basic value (ex-works value) of undelivered units.	
9	Performance Bank Guarantee	To be submitted within twenty-eight (28) days from the date of issuance of the Letter of Intent/Award/PO. Thereafter Supplier shall submit PBG on Purchase Order (PO) basis equivalent to 10% of the PO value (including GST) valid for 24 months after commissioning or 30 months from the last date of receipt, whichever is earlier plus 3 months towards claim period. Upon receipt of the PBG by BYPL against RC/PO, the EMD shall be released.	
10	Reverse Auction	Acceptance for participation in Reverse Auction event	

Seal of the Bidder: **Signature:** **Name:**

VOLUME – II

PRICE BID FORMAT

BSES

ALL PRICES IN INR (₹)

Package Name	Total Supply Prices (A)	Total Installation, Testing and Commissioning Prices (B)	Total Package Cost (C=A+B)
Survey, Design, Supply, Installation, Testing, Commissioning of Scada Communicable FPI System at various substations in BYPL			
In words ……..			

NOTE: Cost of all tests as per technical specification is to be included. No separate/extra charges will be paid.

The Un-priced bid should be marked as **"Quoted"** and be submitted with Part – A

We declare that the following are our quoted prices in INR for the entire package.

Date: Bidders Name:

Place: Bidders Address:

Signature: …… Designation: ……..

Printed Name: …… Common Seal: …….

BSES

SUPPLY (A)

ALL PRICES IN INR (₹)

S. No.	DESCRIPTION OF GOODS	HSN CODE (8 Digit Mandatory)	UoM	QTY **(A)**	UNIT BASIC PRICE INCL FREIGHT (₹) **(B)**	UNIT GST & CESS AS APPLICABLE (CGST & SGST/UTGST or IGST) (₹) **(C)**		UNIT LANDED RATE (All Inclusive) (₹) **(D = B+C)**	TOTAL LANDED VALUE (₹) **(E = DXA)**
						%	AMT		
1	Fault Passage Indicator (FPI) with CBCT		Nos	369					
2	FRTU with Enclosure		Nos	248					
GRAND TOTAL LANDED VALUE (₹)									
In words									

BSES

I/T/C (B)

ALL PRICES IN INR (₹)

S. No.	DESCRIPTION OF SERVICES	SAC CODE (8 Digit Mandatory)	UoM	QTY **(A)**	UNIT BASIC PRICE (₹) **(B)**	UNIT GST & CESS AS APPLICABLE (CGST & SGST/UTGST or IGST) (₹) **(C)**		UNIT LANDED RATE (All Inclusive) (₹) **(D = B+C)**	TOTAL LANDED VALUE (₹) **(E = DXA)**
						%	AMT		
1	Transportation of material as per scope of supply to site and return of removed material from site to BYPL designated store		Nos	248					
2	Removal of existing FPI & related items.		Nos	369					
3	Installation, testing & commissioning of 'FPI with CBCT' including associated wiring.		Nos	369					
4	Installation, testing, commissioning of 'FRTU with Enclosure' and its integration with FPI and BYPL SCADA including associated wiring.		Nos	248					
GRAND TOTAL LANDED VALUE (₹)									
In words …….									

NOTE

1) Item-wise cost for Installation, erection, testing & Commissioning for the items indicated in BOQ-SUPPLY and as per Scope of Work
2) In addition, Unit Rates shall be submitted as indicated in BOQ-ERECTION

BSES

VOLUME – III

TECHNICAL SPECIFICATIONS

BSES

Scope of Supply & Work

For

SCADA Communicable FPI System

BYPL-SOW-CFPI-25-26-04-R0

Revision : 0	**Pages** : 05		**Date** : June 20, 2025
Prepared By	Ashish Joshi	CES	28cf4d7d-6c91-4d53-be77-f490e198fb6b
Reviewed By	Puneet Duggal	CES	404db803-a91f-4234-85f0-0b2b5098ec32
Approved By	Gaurav Sharma	CES	23dc2de2-95de-4472-99a7-dea873f472b6

Contents

1. Objective 3
2. Bidder's Scope 3
3. Scope Demarcation 4

1. Objective

1.1. This document defines the Scope of Supply, Installation, Testing and Commissioning of SCADA Communicable FPI System in BYPL distribution area (Division-Mayur Vihar I and II).

1.2. This document shall be read in conjunction with all technical documents enclosed in tender. In event of any contradiction between tender documents, the most stringent one shall govern.

2. Bidder's Scope

2.1. Bidder's Scope includes design, engineering, manufacture, shop testing, inspection, packing, dispatch, supply, loading, unloading, storage at site, assembly, erection, complete pre-commissioning checks, testing & commissioning at site, obtaining statutory clearance & certification from Electrical Inspector and handing over to BYPL of SCADA Communicable FPI System which comprises of 'Fault Passage Indicator with CBCT' & its 'FRTU with Enclosure'.

2.2. Any supply/work details not explicitly mentioned in this scope but mandatory for successful commissioning of the project shall be deemed to be included in bidder's scope.

2.3. Bidder shall depute its representative at site to assess the condition of existing infrastructure in detail prior to submission of bid. The vendor shall carry out initial Survey for the FPI. All the FPIs shall be replaced with FPI as per the BYPL specification.

2.4. **Scope of Supply**

Delivery of material along with submission of all documents as per technical specification for SCADA Communicable FPI System as per the following table:

SL	Description	Unit	Qty
2.4.1.	Fault Passage Indicator (FPI) with CBCT	Nos	369
2.4.2.	FRTU with Enclosure	Nos	248

2.5. **Scope of Work**

SL	Description	UoM	Quantity
2.5.1.	Transportation of material as per scope of supply to site and return of removed material from site to BYPL designated store	Nos	248
2.5.2.	Removal of existing FPI & related items.	Nos	369
2.5.3.	Installation, testing & commissioning of 'FPI with CBCT' including associated wiring.	Nos	369
2.5.4.	Installation, testing, commissioning of 'FRTU with Enclosure' and its integration with FPI and BYPL SCADA including associated wiring.	Nos	248

Notes:

a) BYPL Designated store: Divisional store / Scrap Store or BYPL location as specified by BYPL engineer-in-charge.

3. Scope Demarcation

SL	Head	BYPL Scope	Bidder Scope	Remarks
3.1.	Supply, installation, Testing, Commissioning of CFPIS & its integration with SCADA	×	✓	As per Specs & Standards
3.2.	Drawing Submissions	×	✓	NA
3.3.	Engineering Approvals	✓	×	NA
3.4.	Routine and acceptance testing at manufacturer's work	×	✓	NA
3.5.	Transportation of Material	×	✓	
3.6.	Cleanliness around work premises	×	✓	NA
3.7.	Security and Safety of material until handing over to O&M.	×	✓	NA
3.8.	Various Machines, Material, Special Tools & tackles to complete the Job	×	✓	NA
3.9.	Maintenance of Equipment Until Handover	×	✓	NA
3.10.	Loading and Unloading of material	×	✓	NA
3.11.	Request to issue 'Permit to Work' from	×	✓	Permit to be applied to

SL	Head	BYPL Scope	Bidder Scope	Remarks
	BYPL authority			Engineer In-charge prior to work through proper procedure
3.12.	Permit to work issuance from BYPL authority	✓	×	NA
3.13.	Temporary office and Material Store near work premises	×	✓	NA
3.14.	Storage of Material	×	✓	BYPL store will not be used for any kind of material storage.
3.15.	Preparation, updation and submission of Progress Report with Photographs to track activities	×	✓	NA
3.16.	Safety of Manpower (Engineers, Supervisors etc) and Security of Material, till Handing-over to BYPL.	×	✓	NA
3.17.	Tools & Tackles related to Job	×	✓	NA
3.18.	Cleanliness around work premises	×	✓	NA
3.19.	Any other supply item or scope of work missing in given sheet to complete commissioning	×	✓	NA
3.20.	Integration of Unit with BYPL SCADA System	×	✓	Bidder has to work with BYPL team or its authorized s/w system provider
3.21.	Any damage to Public Utilities/Properties, etc. shall be rectified/ replaced.	×	✓	Any Damages to be rectified on priority, in minimum possible time.
3.22.	Training to BYPL Personnel	×	✓	As per Scope
3.23.	Various compliances pertaining to Job	×	✓	CEA Regulation

BSES Yamuna Power Limited	BYPL-SOW-CFPI-25-26-04-R0
Scope of Supply and Work For SCADA Communicable FPI System	

*****

Specification for
SCADA Communicable FPI System

Specification no: SP-CFPI-208-R0

Revision	00
Date	20 June 2025

Prepared By	Ashish Joshi	28cf4d7d-6c91-4d53-be77-f490e198fb6b
Reviewed By	Puneet Duggal	404db803-a91f-4234-85f0-0b2b5098ec32
Approved By	Gaurav Sharma	23dc2de2-95de-4472-99a7-dea873f472b6

Index

Record of Revision..... 3
1.0 Scope of Supply:..... 4
2.0 Codes & Standards..... 4
3.0 Reference parameters..... 4
4.0 Communicable FPI System (Architecture):..... 5
5.0 Fault Passage Indicator (FPI) with CBCT..... 6
6.0 FRTU with Enclosure :..... 7
7.0 Integration and Communication Requirement:..... 12
8.0 Painting and Finish..... 13
9.0 Warranty and Marking..... 13
10.0 Quality Assurance, Inspection and Testing..... 14
11.0 Packing, Marking, Shipping, Handling and Storage..... 15
12.0 Deviations..... 16
13.0 Document Submission:..... 16
14.0 Delivery..... 17
Annexure–A: Guaranteed Technical Particulars (Data by Supplier)..... 18
Annexure – B: Signal Requirement per RMU..... 18
Annexure – C: Physical Port Requirement:..... 19

Record of Revision

Clause No.	Change in Specification	Approved By	Rev

1.0 Scope of Supply:

This specification covers the following for SCADA Communicable FPI (CFPI).

1.1 Design, manufacture, testing at manufacturer works before dispatch, packing, delivery of material along with submission of all documentation.

1.2 All accessories / hardware required for installation and operation for the system.

2.0 Codes & Standards

Materials, equipment and methods used in the manufacturing of above-mentioned equipment shall conform to the latest edition of following

SL	Standard Number	Title
2.1	Indian Electricity Act	IE Act 2003
2.2	CEA Regulations	With latest amendments
2.3	Modbus V1.1b3	Modbus application Protocol
2.4	TLS	Transport Layer security Protocol
2.5	IEC 60870-5-104	Tele-control equipment and systems
2.6	MQTT 3.1.1.1	Message Queuing Telemetry Transport Protocol
2.7	RFC 7252	The Constrained Application Protocol (CoAP)

In the event of direct conflict between various order documents, the precedence of authority of documents shall be as follows-

i. Guaranteed Technical Particulars (GTP)

ii. Specification including applicable codes & standards

iii. Approved Vendor Drawings

iv. Other documents

3.0 Reference parameters.

3.1 System Parameters

SL	Parameters	Description
3.1.1	Supply Voltage	
3.1.1.1.	HV System	11 kV (P-P)- 3 Phase 3 Wire
3.1.1.2.	LV System	415 V (P-P)- 3 Phase 4 Wire
3.1.2	Frequency	50 Hz ± 5%,
3.1.3	System NeutralEarthing	Solidly Earthed

3.2 **Environmental condition:** All the equipment shall be suitable for environmental conditions as mentioned below

SL	Parameters	Description
3.2.1	Temperature Range	a. Operation range: -10 Deg C to 55 Deg C b. Limit range of operation: -25 to 60 Deg C c. Limit range of storage / transport : -25 to 70 Deg C
3.2.2	Relative Humidity	0 to 96 %

4.0 Communicable FPI System (Architecture):

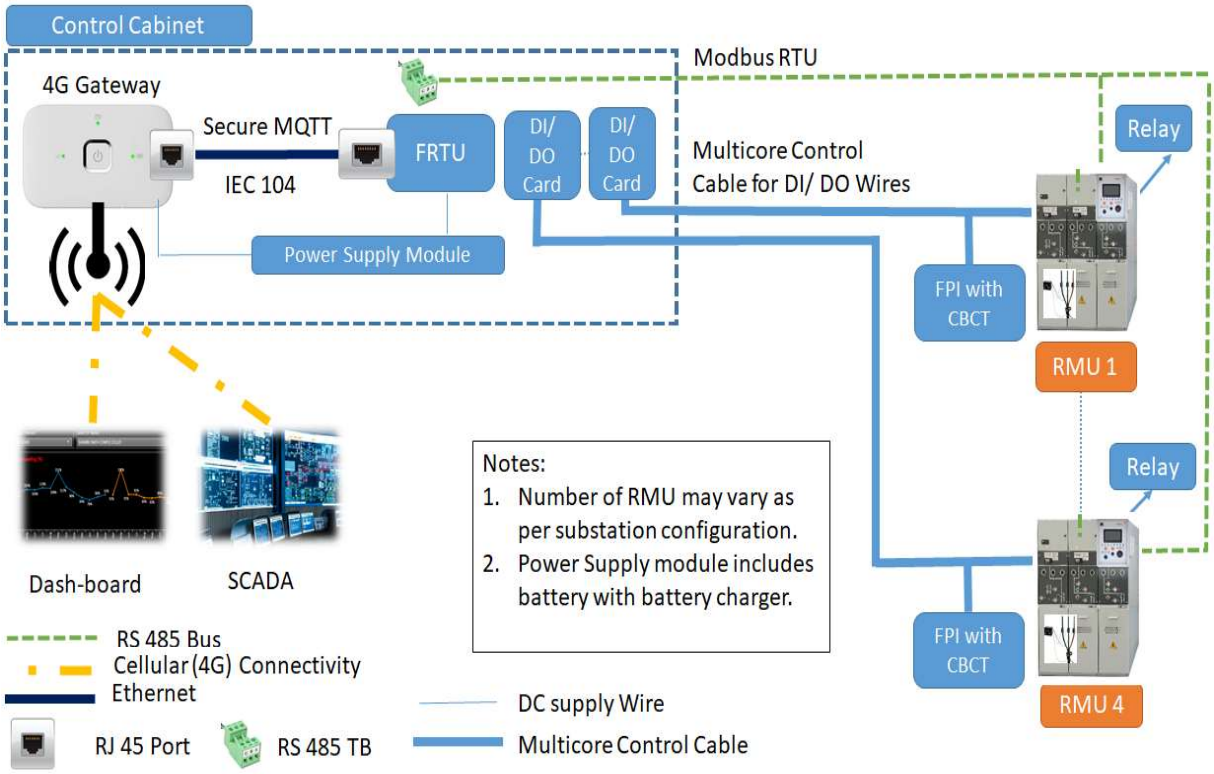

Note – Above architecture is indicative and may change during technical evaluation/ detailed engineering to optimize the system performance.

5.0 Fault Passage Indicator (FPI) with CBCT

SL	Parameters	Description
5.1	Fault passage indicator (FPI)	a. Digital type and shall operate as the current exceeds the set value. b. Flash indication for identifying faults with red LED with one flash for every one sec. Mechanical flag indication shall also be provided, c. Test & reset button 1 NO + 1 NC potential free contact for remote indication FPI power supply unit shall use lithium battery with minimum life of 1000 blinking hours, so that FPI shall continue to function even after main feeder has tripped. d. Sensing current: 50 to 400A e. Sensing Time: 30 to 100 ms in steps of 10ms. f. Reset Time: 0.5 -1-2-3-4 hr g. Resetting Facility: i. Self-reset after reset time ii. Self-reset after restoration of voltage iii. Manual iv. Remote resetting through NO/ NC contact. h. Contact Rating: 1A at 230 V. i. Surface Mounting j. Degree Of protection: IP 54
5.2	CBCT	a. CBCT for earth fault protection – should be split open type suitable for mounting without disconnection of cable. b. Cable connection of FPI with CBCT/phase CTs shall be of pre-molded type on the CBCT side. Cable shall be 2.5 sq.mm cu cable c. CBCT to FPI cable length shall be 5 meter. d. CBCT shall be suitable to be mounted on 3CX PILC / XLPE of size 150 sq.mm to 400 sq.mm e. It should be suitable for system fault level for 2kA – 8.75kA solidly earthed system with typical fault clearance time of 100 ms.

SL	Parameters	Description
5.3	Cables	a. CBCT cable: PVC Insulated Cu Armored Cable of minimum 1 sqmm between FPI and CBCT as per site requirement. Cable length per site shall be 5 meter. b. Control Cable: 0.5 Sqmm multi core flexible copper cable. c. Power Supply: Shall be provided from battery and battery charger using minimum 2.5 Sqmm cu flexible.
5.4	Accessories	a. FPI shall be provided factory fitted in a IP 55 rated Metallic box for outdoor use. b. Box shall have transparent widow to see status of FPI without opening of box door. c. Box shall have anti-theft lock. FPI reset button shall be provided on cover of box. d. Suitable earthing arrangement shall be provided to earth enclosure. e. Box shall be suitable for mounting on RMU / wall / fencing as per site requirement f. In case of metallic box All accessories required for commissioning of FPI shall be in bidder's scope. This includes cable conduit, cable support, cable ties, cable clamps, connectors, lugs, ferrules, tags & mounting hardware.
5.5	Approved makes of FPI	EMG, Siemens Note – Any other make is subject to BSES approval.

6.0 FRTU with Enclosure:

SL	Parameters	Description
6.1	Enclosure	a. All components shall be housed in a single enclosure. Labeling plate shall be provided for the enclosure and each component. b. Enclosure should be constructed using galvanized, 7-tank powder coated CRCA sheet of minimum thickness of 2 mm. c. Enclosure should be suitable for both floor mounting and wall mounting. Mounting hardware shall be Stainless steel only. d. Enclosure should have base frame of 750 mm height. Cover should be provided over base frame for good aesthetics. e. Enclosure should have Ingress Protection rating of IP55.

SL	Parameters	Description
		f. Enclosure shall have locking and padlocking arrangement. g. Enclosure shall be provided with rain canopy (min slope 10Deg). Enclosure shall have U-flange design. h. Minimum 02 earthing studs of size M8 shall be provided. 8SWG GI wire to be used for connection of enclosure earthing wire i. Enclosure door shall be earthed using insulated stranded copper cable of size 2.5 sqmm. j. Proper sign shall be provided for earthing points. k. Enclosure should have appropriate ventilation and cooling arrangement for dissipation of heat generated by system.
6.2	Field Remote Terminal Unit (FRTU)	
6.2.1	Application	a. It should be able to read RMU signals, through potential free contacts (Digital Inputs (DI) and Digital Outputs (DO)). b. Detailed Signal List is enclosed in Annexure-C.
6.2.2	Architecture of FRTU	a. The FRTU's shall have an architecture that supports convenient installation, maintenance and expansion features. b. Their configuration shall include a central processing module, I/O module, time / date facilities, data storage capacity etc.
6.2.3	CPM (Central Processing Module)	a. The central processing module (CPM) shall handle all protocol emulation, perform data acquisition, and execute control requests. b. It shall accept commands from the master station, perform address recognition, assemble response messages in accordance with the received command messages, and transmit these messages to the SCADA/DMS master station. c. The CPM shall have user configurable routines / procedures to carry out connection establishment, link failure detections and reconnection after failures for dialup connectivity. d. The parameters viz: user name & password, baud rate, no. of retries after link failure shall be user configurable.

SL	Parameters	Description
		e. The CPM shall manage communications between all other functional modules of the FRTU and shall determine the integrity of the FRTU. f. The processor shall provide diagnostic information in the message structure that the SCADA/DMS shall monitor. g. A flag shall be set if the FRTU performs a restart for any reason including power failure. h. The CPM shall be programmable in a high level language like C. i. CPM module shall be configurable from remote location over secure port and CPM should have role based access control, configuration file upload & download facility from remote location, data archiving facility, diagnostic features, LED indication for each input / output etc. j. Refer annexure D for port requirement.
6.2.4	IO Modules	a. Each I/O module shall be capable of interfacing with digital inputs, control output points and combinations of point types. I/O modules shall be replaceable without reprogramming, redefinition of configuration parameters or rewiring. b. A control disable switch shall be provided within each I/O module. When the switch is in the control position, the SCADA/DMS or test set shall have control of the digital control outputs. When the switch is in the disable position, the digital control outputs shall be disabled. c. A status input contact shall be available to monitor the position of this switch. d. The switch position shall be reported to the SCADA/DMS system. e. The required number of points shall be the responsibility of the supplier. f. Interposing relays shall be provided between IO modules and potential free contacts of RMU and FPI. g. Number of DI and DO requirement shall be calculated as per annexure C- signal requirement.
6.2.5	Terminal Blocks	a. Screw operated Terminal block suitable for 2.5 sqmm multi stranded flexible copper cable.

SL	Parameters	Description
		b. At least 01 no's Digital Inputs, 01 no's Digital Outputs, shall be provided spare in monitoring unit. c. All signaling, control, power supply voltage shall be 24-volt DC. d. All wiring shall be properly cross ferruled, tagged and routed through properly clamped conduit.
6.2.6	Individual Component Enclosure	a. Polycarbonate/ Metallic Enclosure. b. Metal enclosure should have provision to earth enclosure body. c. Non-metallic enclosure must be fire resistant (FV0 flammability level) & ROHS compliant.
6.3	4G Gateway (modem)	a. 4G (with backward compatibility to 2G) to Ethernet modem/ 4G router to provide WAN connectivity. b. Indication for WAN and LAN connectivity shall be provided. c. Console Interface: RS232 on RJ45 connector. d. LAN Interface: 10/100 Base-T complying to IEEE 802.3 / ANSI 8802-3 on RJ45 connector. e. Protocols: Support for SCADA Protocols in transparent pass through mode. Network Protocols: PPP, IPCP, PAP, CHAP, ARP, IP, ICMP, TCP, UDP, IPSEC, SNTP, TFTP. f. The Modem shall have a capability to restart itself on receiving SMS sent to the SIM inserted in the modem. Modem shall also have self-healing capability to recover from dead lock situation. g. Management: Serial, HTTP, Telnet & via SMS, Port Mapping, Event Log & Upload. Firmware Upgrade, Support for NAT and Port forwarding, Multi-carrier support. h. Status Monitoring: ICMP to 4 destinations for Keep Alive & Self Heal. Signal Strength & LEDs. i. AT Commands Interface: RS-232 port for supporting AT commands, PPP Protocol j. LED Indications: Power ON, Network–Signal strength, SIM availability, Ethernet Link k. Antenna: Dual band Antenna (Omni directional antenna) with SMA connector. 12 dB High gain multi directional antenna with 15Mtr wire to be provided.Provision for taking antenna wire outside to be provided.

SL	Parameters	Description
		l. Accessories: minimum one meter cable for connecting to external DC power supply, minimum one meter Standard RS232 serial data cable to program/ configuration of modem, minimum one meter standard Ethernet cable, Adequate accessories for mounting Antenna at appropriate Sub-station location (Roof/wall) for trouble free operation such as wall mounting bracket, roof mounting bracket etc. m. Refer annexure D for port requirement in Modem.
6.4	Power Supply Unit	a.Input Voltage: 3 Phase 4 Wire AC- 415 volt.Unit should able to withstand maximum system voltages i.e. 456 Volt b.DC supply voltage to each unit (FRTU, Modem etc)- 24 V DC c.24V DC Li-Ion battery to be provided with minimum 2 Hours battery backup d.1 No. smart battery management system with inbuilt Battery Charger (with input AC MCB and Output DC MCB) to be provided. 24V DC Output to be provided. e.Battery Charger should be able to full charge the Battery in maximum 1 hours. f.Smart BMS should be capable of intimating SOC, SOH, battery life prediction, aging of battery, battery voltage and current, charge discharge rate etc. System should be able to notify SCADA for status abnormality alerts over 104 protocol and MQTT protocol. g.Auto-changeover from AC supply to battery in case AC fail to be provided. h.Input Overvoltage, Output Overvoltage, Output overload, over temperature, Battery Low, Battery reverse and Input Voltage transient protection to be provided. SPDs shall be provided at input power supply. i.AC fail and DC fail status to be provided to SCADA over 104 protocol and MQTT protocols.
6.5	Cables and Wiring	a. Cable of appropriate rating for connection within FRTU Enclosure& between FRTU& substation equipment (RMU and FPI) shall be in bidder's scope.

SL	Parameters	Description
		b. Control Cables: Multi strand/multi core flexible color coded PVC insulated Cu wire 0.5 sq mm (SCADA) with ferrules at both ends to be provided. c. Power Supply Cable: PVC Insulated Cu Armored Cable from Aux Supply Source of BSES as per site requirement. Average cable length per site shall be 15 meter. d. Earthing: Main unit to be connected to the substation earthing at minimum 02 nos of points through 8 SWG Al. e. All the external cables shall be run in conduits (flexible metal conduit) properly clamped and tied. Routing of main cable shall be done only in existing trenches or wall of the substations such that it will not hinder any other cable / equipment. f. Cable Entry; Bottom Cable entry to be provided. g. Removable type gland plates shall be provided at bottom of enclosure with 4-5 nos. of knock out holes suitable for 3/4'' gland for control cable entry. Provision of entry shall be kept for extending modem antenna outside the enclosure. h. Double Compression type glands to be provided in order to ensure no opening is available after cable termination is done.

7.0 Integration and Communication Requirement:

SL	Parameters	Description
7.1	WAN communication	a. IEC 104 and MQTT over TLS 1.3 with backup support for TLS 1.2. System should be able to communicate data on both protocols simultaneously. b. Data model shall be approved by BYPL. c. Communication over MQTT should use Json format (key value pair).
7.2	Integration with SCADA	All units shall be integrated with BYPL SCADA over 104 protocol. Additionally they should also able to provide integration other software using Secure MQTT.
7.3	Cyber Security	a. The FRTU shall comply to IEC62351- 3 for cyber security in communication between FRTU and master station and IEC62443-4-2 for cyber security for product including testing

		requirement as per MoP order no 12/34/2020-T&R dtd 08.06.21 & CEA /PLG/R&D/MII/2021 dtd 11.6.21 and any amendment from time to time. b. All the eligible equipment's should complied to requirement of Mandatory Testing and Certification of Telecom Equipment (MTCTE) vide MoP order No. 14/02/2021-UR&SI-II-Part(1)(E-258136).

8.0 Painting and Finish

SL	Parameters	Description
8.1	Name plate on panel front	Fixing by rivet only
8.1.1	Material	Anodized aluminium 16SWG / SS
8.1.2	Background	SATIN SILVER
8.1.3	Letters, diagram & border	Black
8.1.4	Process	Etching
8.1.5	Name plate details	Month & year of manufacture, equipment type, input & output rating, purchaser name & order number, guarantee period, IP Class, Manufacturer Serial no
8.2	Labels	Anodized aluminium with black character on white background The label shall be riveted and not pasted on the panel compartment door. Preferable the labels shall be engraved on the plate.
8.3	Danger plate on front	Anodized aluminum 16 SWG with white letters on red background as per IS 2551.
8.4	Painting surface preparation	Chemical 7 tank process
8.4.1	Painting finish	Powder coated epoxy polyester base grade A, shade -RAL 7032, uniform thickness 80 micron minimum

9.0 Warranty and Marking

SL	Parameter	Technical Requirement
9.1	Comprehensive On Site Warranty	a. 36 Months from the date of Commissioning. b. It includes troubleshooting of hardware at site in-case of any malfunction.

SL	Parameter	Technical Requirement
		c. Replacement of faulty units at site within 7 working days. d. Provide onsite support to BYPL as and when required.
9.2	Marking	a. Following details shall be printed on name plate i. Sr. Nos. ii. Name of manufacturer and Country of Origin iii. Month and year of manufacturing iv. Ratings& details of Equipment v. Communication port provided and hardware ID of same. vi. Data Exchange Protocol b. Proper marking for voltage and current terminals and phase identification shall be provided. c. Making for earth terminals and port. d. Marking shall be provided for power supply terminals along-with their voltage ranges.

10.0 Quality Assurance, Inspection and Testing

SL	Parameter	Technical Requirement
10.1	Vendor's Quality Assurance Plan (QAP)	To be submitted for Purchaser's approval.
10.2	Sampling Method	Sampling Method for quality checks shall be as per relevant IS/ IEC/ IEEE and Purchaser's prior approval shall be taken for the same.
10.3	Inspection Hold- Points	To be mutually identified, agreed and approved in Quality Plan.
10.4	Type tests	a. Bidder Shall submit type tests of the offered items as per relevant standards. b. Type tests for IP rating, Environmental testing and safety class shall be submitted as per relevant IS/ IEC.
10.5	Routine tests	a. All the components shall be subjected to routine tests as per relevant standards. b. Bidder need to specify all the routine tests in their quality plan. c. Calibration certificates of sensors shall also be

SL	Parameter	Technical Requirement
		provided.
10.6	Acceptance tests and Inspection	a. Acceptance tests shall be carried out as per relevant standards and mutually agreed points. b. Purchaser reserves the right to inspect /witness all tests at Seller's works at any time, prior to dispatch, to verify compliance with the specification/ standards. c. In-process and / or final inspection call intimation shall be given in advance to purchaser.

11.0 Packing, Marking, Shipping, Handling and Storage

SL	Parameter	Technical
11.1	Packing	Every equipment shall be properly sealed / packed in environmental friendly boxes/ cartons for protection against damage, vibration and ingress of dust and moisture.
11.2	Packing for accessories and spares	Robust non-returnable packing case with all the above protection & identification Label.
11.3	Marking	On each packing case, following details are required: a. Individual serial number b. Purchaser's name c. PO number (along with SAP item code, if any) & date d. Equipment Tag no. (if any) e. Destination f. Manufacturer / Supplier's name g. Address of Manufacturer / Supplier / it's agent h. Type, rating and other description of equipment i. Country of origin j. Month & year of Manufacturing k. Case measurements l. Gross and net weights in kilograms m. All necessary slinging and stacking instructions
11.4	Test reports & calibration Certificate	Routine test report and calibration certificates

SL	Parameter	Technical
11.5	Shipping	The seller shall be responsible for all transit damage due to improper packing.
11.6	Handling and Storage	Manufacturer instruction shall be followed. Detail handling & storage instruction sheet /manual to be furnished before commencement of supply.

12.0 Deviations

SL	Parameter	Technical
12.1	Deviations	Deviations from this Specification shall be stated in writing with the tender by reference to the Specification clause/GTP/Drawing and a description of the alternative offer. In absence of such a statement, it will be assumed that the bidder complies fully with this specification.

13.0 Document Submission:

Drawing submission shall be as per the matrix given below.

a. All documents/ drawing shall be provided in soft copy only.
b. Language of the documents shall be English only.
c. Incomplete submission shall be liable for rejection.
d. Document check sheet compliance shall be the first sheet for each submission stage.
e. No submission is acceptable without check list compliance.

Order of document shall be strictly as per the check list.

SL	Detail of Document	Bid	Approval	Pre Dispatch
13.1	Guaranteed Technical particulars (GTP)- Refer Annexure A	Required	Required	
13.2	Deviation Sheet, if any	Required	Required	
13.3	GA / cross sectional drawing showing all the views / sections	Required	Required	
13.4	Sample demonstration of each type & rating offered. (Need not to be submitted	1 no's	1 no's	

SL	Detail of Document	Bid	Approval	Pre Dispatch
	with bid)			
13.5	Any software and accessories required for installation/ operation	Required	Required	
13.6	Manufacturer's Quality Assurance Plan and certification for quality standards	Required	Required	
13.7	Type Test report of offered model/ type/ rating	Required		
13.8	Complete product catalogue and user manual.	Required		
13.9	Customer Reference List	Required		
13.10	Recommended list of spare and accessories	Required		
13.11	Program for production and testing (A)		Required	Required
13.12	Detailed installation and commissioning instructions		Required	Required
13.13	As Built Drawing		Required	Required
13.14	Operation and maintenance Instruction as well as trouble shooting charts/ manuals		Required	Required
13.15	Inspection and test reports, carried out in manufacturer's works			Required
13.16	Routine Test certificates			Required
13.17	Test certificates of all bought out items			Required

14.0 Delivery

SL	Parameter	Technical
14.1	Delivery	Vendor shall dispatch the material, only after the Routine Tests/Acceptance Tests of the material witnessed/waived by the Purchaser, and after receiving written Material Dispatch Clearance Certificate (MDCC) from the Purchaser.

Annexure–A: Guaranteed Technical Particulars (Data by Supplier)

Bidder shall furnish the GTP format with all details against each clause of this specification.

Bidder shall not change the format of GTP or clause description.

Bidder to submit duly filled GTP in hard copy format with company seal.

Clause No.	Clause Description	Manufacturer's Reply
1		
2		

Bidder / Vendor seal / signature ----------

Name of the bidder	
Address of the bidder	
Name of contact person	
Telephone number and email id	

Annexure – B: Signal Requirement per RMU

Sl	Description	Per Equipment		Comm / Integration
		DI	DO	
a.	**11KV RMU**			
1	SF6 gas alarm	1		Hard Wire
2	LBS 1 close and open status.	1		Hard Wire
3	LBS1 earth switch status	1		Hard Wire
4	FPI 1 Status	1		Hard Wire
5	LBS 2 close and open status	1		Hard Wire
6	LBS 2 earth switch status	1		Hard Wire
7	FPI 2 status	1		Hard Wire
8	Breaker 1 Close and Open Status	1		Hard Wire
9	Breaker1 Trip Status	1		Hard Wire
10	Breaker 1 Dis-connector close and open Status	1		Hard Wire
11	Breaker 1 Earth switch close an open Status	1		Hard Wire
12	Breaker 2 Close and Open Status	1		Hard Wire
13	Breaker 2 Trip Status	1		Hard Wire

Sl	Description	Per Equipment		Comm / Integration
		DI	DO	
14	Breaker 2 Dis-connector close and open Status	1		Hard Wire
15	Breaker 2 Earth switch close an open Status	1		Hard Wire
16	Relay1 data over Modbus RTU.			Modbus
17	Relay2 data over Modbus RTU.			Modbus
18	FPI 1 Reset		1	Hard Wire
19	FPI 2 Reset		1	Hard Wire
20	Breaker 1 open/trip		1	Hard Wire
21	Breaker 2 open/trip		1	Hard Wire
FRTU				
1	Power Supply Healthy	1		
3	Modem Reboot		1	
4	FRTU Reboot		1	
Total		**16**	**6**	

Annexure – C: Physical Port Requirement:

SL	Equipment	Connection	Physical Connection
1	Modem	Cellular 4G	From Modem to control center and back
		Ethernet Port 1	Modem and FRTU
		Ethernet Port 2	Spare / local connection
2	FRTU	Ethernet Port 1	Modem and FRTU
		Ethernet Port 2	Spare / Local connection
		RS 485 port 1	FRTU and RMU Relay (Daisy chain)
		Digital Inputs	Hardwired (Multicore cable)
		Digital Outputs	Hardwired (Multicore cable)
4	FPI	Digital Inputs	Hardwired (Multicore cable)
		Digital Outputs	Hardwired (Multicore cable)

*****