BSES RAJDHANI POWER LIMITED

NOTICE INVITING TENDER (NIT)

Survey, Design, Supply, Erection, Installation, Testing, Commissioning, Handing over of 02 Nos GIS Grid Substations along with associated Civil work (Package-A) and 09 Nos Cable In-feed/Laying works (Package-B) on Turnkey Basis.

NIT NO: CMC/BR/25-26/FK/PR/KG/1310

Due Date for Submission: 15/12/2025 1530Hrs

BSES

BSES RAJDHANI POWER LTD (BRPL)
Corporate Identification Number: **U74899DL2001PLC111527**
Telephone Number: +91 11 3009 9999
Fax Number: **+**91 11 2641 9833
Website: **www.bsesdelhi.com**

This document is a property of BRPL. This document is meant for the exclusive purpose of bidding against this NIT Number/Specification and shall not transferred, reproduced, or otherwise used for purposes other than that for which it is specifically issued.

BSES RAJDHANI POWER LIMITED

INDEX

S No.	DOCUMENT DESCRIPTION	PAGE NO
VOLUME – I		
1	**INFORMATION TO BIDDER (ITB)**	1 To 22
1.00	**APPENDIX I**	1 To 22
1.01	BID INDEX FOR PART-A (TECHNICAL BID)	
1.02	BID FORM	
1.03	TENDER FEE DETAILS	
1.04	EMD DETAILS	
1.05	FORMAT FOR EMD BANK GUARANTEE	
1.06	COMMUNICATION DETAILS OF THE BIDDER	
1.07	MANUFACTURER AUTHORIZATION FORM	
1.08	QUALIFYING CRITERIA COMPLIANCE INDEX - TECHNICAL CRITERIA	
1.09	LIST OF PURCHASE ORDERS EXECUTED & DELIVERY DETAILS IN SUPPORT OF QUALIFYING REQUIREMENT	
1.10	LIST OF PERFORMANCE CERTIFICATES IN SUPPORT OF QUALIFYING REQUIREMENT	
1.11	SCHEDULE OF DEVIATIONS - TECHNICAL	
1.12	TYPE TEST REPORTS (SEQUENCE OF TESTS SHALL BE STRICTLY IN ACCORDANCE WITH RELEVANT IS/IEC)	
1.13	SAMPLE SUBMISSION DETAILS (IF APPLICABLE AS PER SPECIFICATION)	
1.14	QUALIFYING CRITERIA COMPLIANCE INDEX - COMMERCIAL CRITERIA	
1.15	UNDERTAKINGS	
1.16	SCHEDULE OF DEVIATIONS - COMMERCIAL	
1.17	ACCEPTANCE FORM FOR PARTICIPATION IN REVERSE AUCTION EVENT	
1.18	CODE OF CONDUCT FOR CONTRACTORS	
2	**GENERAL CONDITION OF CONTRACT**	1 To 48
	ENVIRONMENT, HEALTH & SAFETY CONDITIONS	1 To 10
2.00	**APPENDIX II**	1 To 14
2.01	FORMAT FOR ADVANCE BANK GUARANTEE	
2.02	FORMAT FOR PERFORMANCE BANK GUARANTEE	
2.03	BENEFICIARY'S BANK DETAILS WITH IFSC CODE	
2.04	FORMAT OF WARRANTY/GUARANTEE CERTIFICATE	
2.05	FORMAT OF UNDERTAKING GST	
2.06	FORMAT OF WARRANTY / DLP – SERVICES	
2.07	SUMMARY OF COMMERCIAL TERMS AND CONDITIONS	
2.08	FORMAT OF NO DEMAND CERTIFICATE	
2.09	FORMAT FOR LETTER OF INDEMNITY	
VOLUME – II – FINANCIAL BID (PRICE FORMAT)		1 To 78
VOLUME – III - TECHNICAL SPECIFICATIONS		1 To 2205

BSES

VOLUME – I: INFORMATION TO BIDDER (ITB)

BSES

SECTION – I: REQUEST FOR QUOTATION

1.00 EVENT INFORMATION

1.01 BSES Rajdhani Power Ltd (hereinafter referred to as **"BRPL"**) invites sealed tenders in 2 envelopes for following scope of work:

Table 1: Package Details

Package A					
S. No.	**Description**	**Scheme No**	**Scheme Name**	**Estimated Cost (₹ Crore)**	**EMD Amount (₹ Lakh)**
1	Survey, Design, Supply, Installation, Testing and Commissioning including Civil Works of 66/11 kV GIS Grid substation with PTRs on Single point responsibility basis	Scheme No -1	66/11 kV Molarbandh GIS Grid	61 Cr	61 Lakhs
2		Scheme No- 2	66/11 kV Vamasundari GIS Grid	45 Cr	45 Lakhs
Total Amount - Package A (₹)				**106**	**106**

PACKAGE-B1					
S. No.	**Description**	**Scheme No**	**Scheme Name**	**Estimated Cost (₹ Crore)**	**EMD Amount (₹ Lakh)**
1	Supply, Laying, Testing & Commissioning of 66KV 1CX1000 SQMM & 66KV 3CX300 SQMM Cables with required accessories on turnkey basis	Scheme No- 1	Molarbandh infeed	14	14
2		Scheme No- 2	Vamasundari infeed	25	25
3		Scheme No- 3	220KV RKP to JNU and Vasant Kunj C BlK	20	20
4		Scheme No- 4	220KV DTL PPK-1 to 66KV G-3	4	8
5		Scheme No- 5	220KV DTL PPK-1 to 66KV G-2	5	5
6		Scheme No- 6	Pankha road to Sagarpur ckt.	8	8
Total Amount - Package B1 (₹)				**76**	**80**

PACKAGE-B2					
S. No.	**Description**	**Scheme No**	**Scheme Name**	**Estimated Cost (₹ Crore)**	**EMD Amount (₹ Lakh)**
1	Supply, Laying, Testing & Commissioning Of 33 KV 3CX400 SQMM Cables With Required Accessories on Turnkey Basis	Scheme no 7 A	Peeragarhi to Mukherjee Park (Ckt–1 & 2)	13	13
2		Scheme no 7 B	Paschim Vihar to Mukherjee Park (Ckt 3)		

3		Scheme no 8	Malviya Nagar to Shivalik Circuit	5.4	5.4
4		Scheme no 9	Pankha Road to Mayapuri Circuit	8.6	8.6
Total Amount - Package B2 (₹)				**27**	**27**
Consolidated Total Amount - Package A + B (₹)				**209**	**213**

The bidder may quote either Package A, Package B, or both Packages. The bidder shall submit EMD based on the Packages quoted, considering the EMD Value provided in Table 1. The bidder must meet the Qualification Criteria detailed in clause 2.0 below, in accordance with the quoted packages.

1.02 The tender document can be downloaded from our website www.bsesdelhi.com **by navigating to → BSES RAJDHANI POWER LTD → Tender → Open Tenders** or access our e-tendering portal directly at https://srmprdportal.bsesdelhi.com/irj/portal to view and participate in the tender.

1.03 **Tender Fee**: The bidder must compulsorily submit the non-refundable tender fee of ₹ 1,180/- either as a demand draft or via online transfer through IMPS, NEFT, or RTGS to cover the cost of bid documents. Bids submitted without the Tender fee will be rejected.

1.04 **Earnest Money Deposit (EMD)** as specified in Table 1, must be valid for 180 days from the bid submission due date. It should be submitted in the form of BG, FD, or online transfer of the required amount through IMPS, NEFT, or RTGS. Bids submitted without the EMD will be rejected.

1.05 **Time Schedule**
The bidders should complete the following events within the dates specified as under:

S. No.	Events	Due date & Time
1	Date of availability of tender documents from BRPL Website	28.11.2025, 15:00 Hours
2	Date & Time of Pre-Bid Meeting Pre-Bid Meeting will be done offline	08.12.2025, 14:00 Hours
3	Last Date of receipt of pre-bid queries, if any (Queries to be submitted via e-mail)	10.12.2025 up to 18:00 Hours
4	Last Date of replies to all the pre-bid queries as received	12.12.2025 up to 17:00 Hours
5	Last date and time of receipt of Complete Bids (Tender Fees, EMD, Part A & Part B)	15.12.2025, 15:30HRS
6	Date & Time of Opening of PART A – EMD and Technical Bid	1512.2025, 16:30HRS
7	Date & Time of opening of Price/RA of qualified bids	Will be notified to the qualified bidders through our website/e-mail

Note: In the event of the last date specified for submission of bids and the date of opening of bids is declared as a closed holiday for the BSES office, the last date of submission of bids and date of opening of bids will be the following working day at the appointed times.

1.06 The Bid shall be submitted in two (02) parts as detailed below:

- **Part A - Techno Commercial Bid**

- **Part B - Financial (Price) Bid**

Bids will be received up to 15/12/2025 1530 HRS at the address given below. Part A of the Bid shall be opened on 15/12/2025 1630 HRS.

Part B of the Bid will be opened in case of Techno-Commercially qualified Bidders and the date of opening of same shall be intimated in due course.

Head of Department
Contracts & Materials Deptt.
BSES Rajdhani Power Ltd
Nehru Place
New Delhi 110019

It shall be the sole responsibility of the bidder to ensure that the bid documents reach the above office on or before the last date and time specified.

All envelopes shall be duly super scribed "**Survey, Design, Supply, Erection, Installation, Testing, Commissioning, Handing over of 02 Nos GIS Grid Substations along with associated Civil work (Package-A) and 09 Nos Cable In-feed/Laying works (Package-B) on Turnkey Basis against NIT NO: CMC/BR/25-26/FK/PR/KG/1310**

1.07 BSES Rajdhani Power Ltd reserves the right to accept or reject any or all tenders without assigning any reason thereof in the event of the following:

a) Tender is received after the due date and time.
b) Tender fee of requisite value is not submitted.
c) Package wise **Earnest Money Deposit (EMD)** as per Table no.1 is not deposited in shape of FD/Bank Guarantee drawn in favour of BSES Rajdhani Power Ltd, payable at Delhi.
d) Financial Bid, as per the prescribed Price Schedule, is not submitted.
e) The bid is incomplete in any respect.
f) The required documents in support of the Qualification Requirements mentioned in Section 1, Clause 2.0 of this Tender Document are not furnished.
g) Complete documents and details as per the Bid Index for Part-A (Technical Bid) at Appendix I – Annexure 1.01 & Appendix II – Annexure 2.05 are not enclosed.
h) Filled in Schedule of Deviations as per Annexure is not submitted.

2.00 QUALIFICATION CRITERIA

The order shall be awarded on **"Single Point Responsibility Basis"** which includes design, supply, erection, installation, testing, commissioning, handing over and associated civil work of "**GIS Grid Substation (Package A)" or "Cable In-feed works (Package B)" or Both (Package A&B)** on Turnkey Basis.

Bidder shall quote for Package A or Package B or both packages.

For Package-B, Bidder shall quote for Package- B1 (66 KV Cable Infeed works) or Package B2 (33KV Cable Infeed works) or both packages

Bidder shall meet both below QR criteria (QR-01 & QR-02) in case of bidding for Packages A & B both.
For the above scope of work prospective bidder must qualify the criteria as mentioned below to participate in the bidding process

Qualification Criteria for Package A

Qualification Criteria QR -01: For the GIS OEM OR EPC Vendor for GIS/AIS Substation:

2.01 **Technical Criteria:**

Sl No.	Clause	Criteria	Documents to be submitted by Bidder
1	OEM / EPC	The bidder shall be a legally constituted entity operating in India, being any one of the following: a) A proprietorship firm registered and operating in India b) A partnership firm registered under the Indian Partnership Act, 1932 c) A company incorporated under the Companies Act, 2013 (or erstwhile Companies Act, 1956) d) A Limited Liability Partnership (LLP) registered under the Limited Liability Partnership Act, 2008 e) Any other entity duly registered under applicable Indian laws The bidder must fulfill one of the following categories:	
		a. The bidder should have its own manufacturing facility in India for "GIS Panels" of 66kV or higher voltage rating for the last three (03) years. Offered GIS equipment shall be supplied from the Indian manufacturing unit only.	i. Manufacturing and factory incorporation certificate / Undertaking ii. The details of manufacturing units, locations and works from where supply against this tender shall be proposed to be furnished
		b. The bidder shall be an EPC Company engaged in turnkey execution of 33kV or higher voltage grade GIS/AIS Grid Substation works for the last three (03) years. EPC Bidder shall supply GIS required for the Grid Sub-station works from the manufacturer meeting Qualification Criteria mentioned in Sl No. 1-5 of QR-01 for offered GIS rating (mandatory to furnish the name of GIS - OEM, along with the Bid submitted, E/T/C of GIS panels shall be executed by GIS "OEM" Only). ***Vendor has to declare single GIS OEM name before Reverse Auction.**	i. Company Incorporation certificate ii. Declaration of GIS OEM name & MAF iii. Undertaking for E/T/C of panels by GIS "OEM" iv. OEM Documents for QR-01 for points 1-5
2	Experience	The bidder should have successfully designed, supplied, installed & commissioned a minimum of two (02) nos 33KV GIS/AIS Grid substations or higher rating projects in the last 7 years from the date of bid opening from any utilities/ SEB's/ PSU's/ reputed company wherein the end-user shall be utilities/ SEB's/ PSU's/ Government Organizations.	i. Turnkey Purchase order/Work order copy ii. Work completion certificate copy
3	Performance Certificate	The Bidder shall submit the performance of at least two (2) nos executed Turnkey Projects of 33KV GIS/AIS or higher voltage rating in the last 7 years from the date of bid opening from utilities/ SEB's/ PSU's/ Government Organizations. In case of bidder has a previous association with BRPL/BYPL for similar project, product and service,	Performance Certificates

		the performance feedback for that bidder by BRPL/BRPL shall only be considered irrespective of the performance certificate issued by any third organization.	
4	Backup support by OEMs	Bidder shall procure equipment from the approved Bidder list of BRPL for individual items (mentioned in Scope/Specifications). The bidder is supposed to have an agreement with the manufacturer/services provider in India to provide support to BRPL for any supply, services & spares related issues for the time stipulated in the specification or service life of the equipment.	Undertaking by the bidder for Backup support by OEMs
5	ISO	The bidder must possess valid ISO 9001:2015 certification or above.	Valid copy of Certification
6	Electrical License	The bidder should possess valid Electrical Contractor License issued by the competent statutory agency to undertake work in NCT Delhi. In case the bidder is not having this license, suitable sub-contractor having a valid license shall be engaged for works at site where copy of valid license shall be submitted to BRPL before the start of the work OR the Bidder to give the undertaking that it will be obtained by them before the start of the work at the site.	i. Electrical Contractor License Copy ii. Undertaking if not available

2.02 **Commercial Criteria:**

Sl No.	Clause	Criteria	Documents to be submitted by Bidder
7	Turnover	Bidder should have an Average Annual Sales Turnover of Rs 400 Crores or more in the last three (3) Financial Years.	Balance Sheet / Copy of audited P&L Account / Duly certified CA certificate having UDIN to be submitted
8	Litigation	The Bidder shall submit an undertaking that "No Litigation" is pending with the BRPL or its Group/Associates Companies as on date of bid opening.	Self-Undertaking
9	Blacklisting	An undertaking (self-certificate) that the bidder has not been blacklisted/debarred by any central/state government institution/Electricity utilities as on date of bid opening.	Self-Undertaking
10	Statutory Documents	The bidder must have valid PAN No., and GST Registration Number, in addition to other statutory compliances. The bidder must submit copy of registrations and submit an undertaking that the bidder shall comply with all the statuary compliances as per the laws/rules etc. before the start of the supply/work.	Relevant Statutory Documents Copy/ Self Undertaking

Qualification Criteria QR -02 for Package B: Cable In-feed Works

3.01 **Technical Criteria:**

Sl No.	Clause	Criteria	Documents to be submitted by Bidder
1	OEM / EPC	The bidder shall be a legally constituted entity operating in India, being any one of the following:	

		a) A proprietorship firm registered and operating in India b) A partnership firm registered under the Indian Partnership Act, 1932 c) A company incorporated under the Companies Act, 2013 (or erstwhile Companies Act, 1956) d) A Limited Liability Partnership (LLP) registered under the Limited Liability Partnership Act, 2008 e) Any other entity duly registered under applicable Indian laws The bidder must fulfill one of the following categories:	
		a. The bidder should have its own manufacturing facility in India for the last three (03) years for 33KV or higher voltage grade Power Cables through Dry Cure CCV or VCV line. Cable OEM can enter into Consortium /JV with the contractors who can jointly fulfil the Qualification Criteria.	Cable manufacturing and factory incorporation certificate
		b. Bidder should be an EPC company engaged in turnkey execution of 33KV or higher voltage grade cable laying work from the last three (03) years. EPC Bidder shall supply all the Cables required for the Cable In-feed works from the manufacturer meeting the Qualification Criteria mentioned in QR-03	i. Company Incorporation certificate ii. Undertaking iii. Documents of Cable OEM as per QR-03
2	Experience	Bidder along with consortium, should have experience in turnkey projects including design, supply, laying, testing & commissioning of offered or higher voltage grade Power Cables in any utilities/ SEB's/ PSU's/ reputed company wherein the end-user shall be utilities/ SEB's/ PSU's/ Government Organizations having minimum cumulative 25 KM cable quantity in last Seven (07) years from the date of bid opening. Cable manufacturer (OEM) along with Consortium Partner can jointly fulfil the Qualification Criteria.	i. Turnkey Purchase order/Work order copy ii. Work completion certificate copy iii. Consortium Agreement
3	Performance Certificate	The Bidder along with consortium, shall submit two (2) years of satisfactory performance of at least two (2) executed Turnkey Projects of 33KV or higher voltage grade power cables SITC work execution, out of which one certificate should be of more than 10KM cable quantity in the last 7 years from the date of bid opening from any utilities/ SEB's/ PSU's/ Government Organizations. In case of bidder has a previous association with BRPL/BYPL for similar project, product and service, the performance feedback for that bidder by BRPL/BYPL shall only be considered irrespective of the performance certificate issued by any third organization	Performance certificate
4	Backup support by OEMs	Bidder shall procure equipment from the approved Bidder list of BRPL for individual items (mentioned in Scope/Specifications). The bidder is supposed to have an agreement with the manufacturer/services	Undertaking by bidder for Backup support by OEMs

BSES

		provider in India to provide support to BRPL for any supply, services & spares related issues for the time stipulated in the specification or service life of the equipment.	
5	ISO	The bidder must possess valid ISO 9001:2015 certification or above.	Valid copy of Certification
6	Electrical License	The bidder should possess valid Electrical Contractor License issued by competent statutory agency to undertake work in NCT Delhi. In case bidder is not having this license, suitable sub-contractor having the valid license shall be engaged for works at site where copy of valid license shall be submitted to BRPL before the start of the work OR Bidder to give the undertaking that it will be obtained by them before the start of the work at site.	i. Electrical Contractor License Copy ii. Undertaking if not available

3.02 **Commercial Criteria:**

Sl No.	Clause	Criteria	Documents to be submitted by Bidder
7	Turnover	Bidder should have an Average Annual Sales Turnover of Rs 250 Crores or more in the last three (3) Financial Years.	Balance Sheet / Copy of audited P&L Account / Duly certified CA certificate having UDIN to be submitted
8	Litigation	The Bidder shall submit an undertaking that "No Litigation" is pending with the BRPL or its Group/Associates Companies as on date of bid opening.	Self-Undertaking
9	Blacklisting	An undertaking (self-certificate) that the bidder has not been blacklisted/debarred by any central/state government institution/Electricity utilities as on date of bid opening.	Self-Undertaking
10	Statutory Documents	The bidder must have valid PAN No., and GST Registration Number, in addition to other statutory compliances. The bidder must submit copy of registrations and submit an undertaking that the bidder shall comply with all the statuary compliances as per the laws/rules etc. before the start of the supply/work.	Relevant Statutory Documents Copy/ Self Undertaking

Qualification Criteria QR -03 for Package B: Cable In-feed works - Criteria for the selection of Cable Supplier

4.01 **Technical Criteria:**

Sl No.	Clause	Criteria	Documents to be submitted by Bidder
1	OEM (Manufacturing base in India)	The Bidder should have its own manufacturing facility in India for the last three (03) years for the offered or higher voltage grade Power Cables.	i. OEM Manufacturing and factory incorporation certificate / Undertaking ii. The details of manufacturing units, locations and works from where supply against this tender shall be proposed to be furnished by OEM.
2	CCV/VCV line	The bidder must have a Dry cure and Dry cooling CCV/VCV line for manufacturing of the offered or higher voltage grade cables.	Undertaking

3	Supply Quantity	The bidder should have supplied at least 25 KMS of the offered or higher voltage grade Power Cables in the last Seven (07) years from the date of bid opening from to any utilities/ SEB's/ PSU's/ reputed companies wherein the end-user shall be utilities/ SEB's/ PSU's.	i. Summary list of executed Purchase orders ii. Purchase order copies iii Material delivery clearance certificate copy or Invoice Copies or Delivery completion/ Performance certificate
4	Performance Certificate	Performance certificate for minimum two (2) years of satisfactory performance for the offered or higher voltage grade Power Cables supplied in last seven (7) years from the date of bid opening from utilities/ SEB's/ PSU's/ Government Organizations. In case of bidder has a previous association with BRPL/BYPL for similar project, product and service, the performance feedback for that bidder by BRPL/BRPL shall only be considered irrespective of the performance certificate issued by any third organization.	Performance certificates
5	Manufacturing Capacity	The bidder should have a manufacturing capacity of a minimum 20 km per month for the offered or higher voltage grade Power Cables.	Installed Manufacturing Capacity (duly certified by the CE/CA/DIC/Self-Undertaking/ Government Organisation/others)
6	ISO	The bidder must possess valid ISO 9001:2015 certification or above.	Valid copy of Certification
7	BIS Licence	The bidder must possess valid BIS Licence.	Valid copy of Licence
8	New Bidder	In case of Bidder is not registered with BRPL, factory inspection, and evaluation shall be carried out to ascertain the bidder's manufacturing capability and quality procedure. However, BRPL reserves right to carry out factory inspection and evaluation for any bidder prior to technical qualification evaluation.	Undertaking

4.02 **Commercial Criteria:**

Sl No.	Clause	Criteria	Documents to be submitted by Bidder
9	Turnover	Bidder should have an Average Annual Sales Turnover of Rs 100 Crores or more in the last three (3) Financial Years.	Balance Sheet / Copy of audited P&L Account / Duly certified CA certificate having UDIN to be submitted
10	Litigation	The Bidder shall submit an undertaking that "No Litigation" is pending with the BRPL or its Group/Associates Companies as on date of bid opening.	Self-Undertaking
11	Blacklisting	An undertaking (self-certificate) that the bidder has not been blacklisted/debarred by any central/state government institution/Electricity utilities as on date of bid opening.	Self-Undertaking
12	Statutory Documents	The bidder must have valid PAN No., and GST Registration Number, in addition to other statutory compliances. The bidder must submit copy of registrations and submit an undertaking that the bidder shall comply with all the statuary compliances	Relevant Statutory Documents Copy/ Self Undertaking

		as per the laws/rules etc. before the start of the supply/work.	

TERMS & CONDITIONS TO APPLY AS CONSORTIUM:

i. The Cable OEM (manufacturer of the offered cable in the NIT or higher voltage grade power cables) may collaborate with BRPL enlisted contractor to form a consortium and submit Bid for this tender, provided they jointly qualify as per qualification criteria of the tender.

ii. The Cable OEM shall act as the Lead Partner and Bidder within the consortium and must be supported by a power of attorney, duly signed by the legally authorized signatories of all partners. Refer to Annexure-I for the sample format.

iii. Bidder will be authorized to incur liabilities and receive instructions on behalf of all partners in the Consortium. The entire execution of the contract, including payment, will be conducted exclusively with the Bidder. This authorization will be evidenced by submitting a Power of Attorney signed by the legally authorized signatories of all partners.

iv. Bidder will be solely responsible for executing the contract in accordance with the NIT. A copy of the agreement between the consortium partners, which includes this provision, must be submitted with the Bid.

v. In the event of any default by partner/partners of the Consortium, BRPL reserves the right to get the work executed from any other source at the Risk & Cost of the Bidder. The Extra Expenditure so incurred shall be debited to the Bidder.

vi. Responsibilities in respect of execution of tendered work by the Bidder as well as of each Consortium member shall be clearly indicated in the agreement.

vii. The Consortium agreement shall not be cancelled or amended unilaterally without consent of the purchaser and a statement to this effect should appear in the consortium agreement.

viii. A firm can submit only one bid in the same bidding process, either individually as a bidder or as a partner of a Consortium. A bidder who submits or participates in more than one bid will cause all the bids in which the bidder has participated to be disqualified.

Original consortium agreement on Non judicial stamp paper duly registered with sub registrar office/Notarized of appropriate value satisfying the above conditions shall be submitted along with the bid indicating role and duties of each consortium member.

Note:

- **In case of non-furnishing the requisite documents along with the bid, the bid will be considered as non-responsive and bid may be summarily rejected.**
- **Orders shall be issued in favour of the Bidder only.**

Notwithstanding anything stated above, BRPL reserves the right to assess the bidder's capability to perform the contract, assess the capability and installed capacity of the Bidder for carrying out the supplies, should the circumstances warrant such assessment in the overall interest of the purchaser. In this regard the decision of the purchaser is final.

<u>As an exception to the foregoing Clause 2.00 above:</u>

a. Sanctions: Firms, which includes any of the Consortium members in case of bidding Consortium Partner as per Clause 2.00 above, blacklisted by the Purchaser/ CPSEs or any

of their subsidiaries / Government of India/ any Regulatory Authority, as on the date of submission of Bid, are not eligible to bid.

b. Suspension: Firms, which includes any of the Consortium members in case of bidding Consortium Partner as per Clause 2.00 above, under suspension by the Purchaser as the result of the operation of a Bid–Securing Declaration or Proposal-Securing Declaration, shall not be eligible to bid.

c. Prohibitions: Firms, which includes any of the Consortium members in case of bidding Consortium Partner as per Clause 2.00 above, and individuals of a country or goods/ works/services manufactured/ produced in a country shall be ineligible, if as a matter of law or official regulations, the Government of India prohibits commercial relations with that country.

d. Restrictions under Rule 144 (xi) of GFR 2017: Restrictions on procurement from a bidder of a country which shares a land border with India.

3.00 BIDDING AND AWARD PROCESS

Bidders are requested to submit their offer strictly in line with this tender document. Normally, the deviations to tender terms are not admissible and the bids with deviations are liable for rejection. Hence, the bidders are advised to refrain from taking any deviations on this Tender. Still, in case of any deviations, all such deviations shall be set out by the Bidders, clause by clause in the "Annexure - Schedule of Deviations" and the same shall be submitted as a part of the Technical Bid.

3.01 BID SUBMISSION

The bidders are required to submit the bids in 2(two) parts to the following address

Head of Department
Contracts & Material Department
BSES Rajdhani Power Ltd
1st Floor, C Block
BSES Bhawan, Nehru Place
New Delhi 110019

PART A: TECHNICAL BID comprising of the following, do not contain any cost information whatsoever and shall be submitted within the due date:

S. No.	Descriptions	Type of Documents/Format
A.1	**Bid Details**	
1	**Bid Index for Part-A (Technical Bid)**	In the prescribed format enclosed at APPENDIX I ANNEXURE – 1.01
2	**Cover Letter, if any**	Standard Format
3	**Bid Form (Unpriced) Duly Signed**	Duly Signed Bid Form as per enclosed format at APPENDIX I ANNEXURE – 1.02
4	**Tender Fee**	Non-refundable demand draft or online transfer of the requisite amount through IMPS/NEFT/RTGS for Rs 1,180/-, Duly filled and signed as per enclosed format at APPENDIX I ANNEXURE – 1.03
5	**EMD**	Online transfer of the requisite amount through IMPS/NEFT/RTGS or FD or BG in the prescribed stamp paper & format enclosed at APPENDIX I ANNEXURE – 1.05, EMD Details Duly filled and signed as per enclosed format at APPENDIX I ANNEXURE – 1.04
6	**Power-of-Attorney/ Authorization Letter**	In the standard stamp paper/letter

A.2	Technical Bid	
7	**Communication Details of the Bidder**	Duly filled and signed as per enclosed format at APPENDIX I ANNEXURE – 1.06
8	**Manufacturer Authorization Form (as applicable)**	Duly filled and signed as per enclosed format at APPENDIX I ANNEXURE – 1.07
9	**Technical Qualifying Criteria Compliance Index & Documents**	Documentary evidence in support of qualifying criteria mentioned in Section 1 Clause 2.00. Duly filled and signed as per enclosed format at APPENDIX I ANNEXURE – 1.08, ANNEXURE – 1.09 & ANNEXURE – 1.10
10	**Schedule of Deviations - Technical**	Duly filled and signed as per enclosed format at APPENDIX I ANNEXURE – 1.11
11	**Technical Details/ Filled in Guaranteed Technical particulars (GTP) as per specification**	Bidder shall submit duly filled GTP with all Technical documents
12	**Technical Drawings as per specification**	Bidder shall submit all Drawings as per the specification
13	**Type Test Reports**	Bidders shall submit a copy of type test reports in their technical bids in support of technical specifications. Duly filled and signed as per enclosed format at APPENDIX I ANNEXURE – 1.12
14	**Sample Submission Details (if applicable as per specification)**	Duly filled and signed as per enclosed format at APPENDIX I ANNEXURE – 1.13
15	**Product Catalogue (If applicable)**	Bidders shall submit a copy of the product catalogue in their technical bids in support of technical specifications
16	**Manufacturer's Quality Assurance Plan**	Bidders shall submit a copy of MQP in their technical bids in support of technical specifications
17	**Other drawings/ documents mentioned in technical specification**	Bidders shall submit a copy of documents in their technical bids in support of technical specifications
18	**Testing Facilities**	Bidder shall submit the details of testing facilities available at their works/factory.
A.3	**Commercial Bid**	
19	**Company Profile, Organization Chart & Manpower Details.**	Bidder shall submit the details of Organization & Manpower with qualification and experience.
20	**Commercial Qualifying Criteria Compliance Index & Documents**	Documentary evidence in support of qualifying criteria mentioned in Section 1 Clause 2.00. Duly filled and signed as per enclosed format at APPENDIX I ANNEXURE – 1.14
21	**Undertakings**	Duly signed self-undertakings as per enclosed format at APPENDIX I ANNEXURE – 1.15
22	**Schedule of Deviations - Commercial**	Duly filled and signed as per enclosed format at APPENDIX I ANNEXURE – 1.16
23	**Acceptance Form For Participation in Reverse Auction Event**	Duly signed Acceptance Form For Participation In Reverse Auction Event as per enclosed format at APPENDIX I ANNEXURE – 1.17
24	**Commercial Terms and Conditions**	Acceptance of Commercial Terms and Conditions viz. Delivery Schedule/Period, Payment terms, PBG etc. Duly filled and signed as per enclosed format at APPENDIX II ANNEXURE – 2.05

25	**Un price Bid Duly Signed**	Item wise marked as "Quoted" & Duly Signed Un price Bid as per enclosed format at VOLUME – II - FINANCIAL BID (PRICE FORMAT)
26	**Signed Tender document**	Original Tender documents duly stamped & signed on each page as a token of acceptance

PART B: FINANCIAL BID comprising of

- Price strictly in the Format enclosed at VOLUME – II - FINANCIAL BID (PRICE FORMAT) indicating Break up of basic price, taxes & duties, etc.
- The Bidder has to submit the item-wise price bifurcation in the bid. An unpriced copy must be attached with the Part A (Technical Bid).

This will be opened internally after techno-commercial evaluation and only of the qualified bidders.

REVERSE AUCTION CLAUSE: Purchaser reserves the right to use the reverse auction as an optional tool through SAP-SRM as an integral part of the entire tendering process. All techno-commercially qualified bidders shall participate in the reverse auction. **Reverse Auction may be conducted at the buyer's discretion on Lump-sum basis, for the Total Landed Cost (including supply and services), on a package-wise basis, or on a scheme-wise basis.**
In case RA is not concluded/conducted for any reasons, a "final no regret" financial bid in a sealed envelope will be called for from all qualified bidders

Notwithstanding anything stated above, the Purchaser reserves the right to assess the bidder's capability to perform the contract, should the circumstances warrant such assessment in the overall interest of the purchaser. In this regard the decision of the purchaser is final. Bidder is to submit their acceptance as per the format APPENDIX I ANNEXURE – 1.17.

BIDS RECEIVED AFTER THE DUE DATE AND TIME MAY BE LIABLE FOR REJECTION

4.00 AWARD DECISION

4.01 Purchaser intends to award the business on the lowest bid basis, so suppliers are encouraged to submit the bid competitively. The decision to place a LOI/Purchase Order solely depends on the purchaser on the cost competitiveness across multiple lots, quality, delivery and bidder's capacity, in addition to other factors that Purchaser may deem relevant.

4.02 In the event of your bid being selected by the purchaser (and/or its affiliates) and you subsequent DEFAULT on your bid; you will be required to pay the purchaser (and/or its affiliates) an amount equal to the difference in your bid and the next lowest bid on the quantity declared in NIT/RFQ.

4.03 In case any supplier is found unsatisfactory during the delivery process, the award may be cancelled and BRPL reserves the right to award other suppliers who are found fit.

4.04 Contract Price/Rate shall remain "FIRM" till the validity of the Contract.

4.05 Quantity Variation: The purchaser reserves the right to vary the quantity based on the actual requirements.

4.06 **Incase execution target timelines is coinciding, BRPL reserves the right to limit the award of schemes to single party depending on the contractor's turnover, execution capabilities & past performance. The decision shall be as per BRPL discretion and Vendor has to abide by the same.** The purchaser reserves all the rights to award the contract to one or more bidders to meet the Project execution requirement or nullify the award decision without citing any reason.

5.00 MARKET INTEGRITY

We have a fair and competitive marketplace. The rules for bidders are outlined in the Terms & Conditions. Bidders must agree to these rules before participating. In addition to other remedies available, we reserve the right to exclude a bidder from participating in future markets due to the bidder's violation of any of the rules or obligations contained in the Terms & Conditions. Bidders who violate the marketplace rules or engage in behaviour that disrupts the fair execution of the marketplace restrict a bidder to the length of time, depending upon the seriousness of the violation. Examples of violations include, but are not limited to:

- Failure to honour prices submitted to the marketplace.
- Breach of the terms of the published in Request for Quotation/NIT.

6.00 SUPPLIER CONFIDENTIALITY

All information contained in this RFQ is confidential and shall not be disclosed, published or advertised in any manner without written authorization from BRPL. This includes all bidding information submitted.

All RFQ documents remain the property of BRPL and all suppliers are required to return these documents to BRPL upon request.

Suppliers who do not honor this confidentiality provisions will be excluded from participating in future bidding events.

7.00 CONTACT INFORMATION

Technical clarification, if any, as regards this RFQ shall be sought in writing and sent by e-mail/post/courier to the following addresses. The same shall not be communicated through phone

Address	Name/ Designation	E-mail Address
Technical		
CES Dept. 1st Floor, A-Block, BSES Rajdhani Power Ltd, BSES Bhawan, Nehru Place, New Delhi 110019	Anupam Kumar AsVP (CES)	Anupam.o.kumar@reliancegroupindia.com
	Uttam Shukla AsVP (CES)	Uttam.shukla@reliancegroupindia.com
	Deepti Sharma Addl. VP (HOD-CES)	Deepti.r.sharma@reliancegroupindia.com
Commercial		
CES Dept. 1st Floor, C & D-Block, BSES Rajdhani Power Ltd, BSES Bhawan, Nehru Place, New Delhi 110019	Kumar Gaurav GM (C&M)	Kumar.ga.gaurav@reliancegroupindia.com
	Pankaj Goyal AsVP (Head-Procurement)	pankaj.goyal@reliancegroupindia.com
	Fauzia Khalid SVP (HOD-C&M)	fauzia.khalid@reliancegroupindia.com

BSES

SECTION – II: INSTRUCTION TO BIDDERS

A. GENERAL

1.00 BSES Rajdhani Power Ltd, hereinafter referred to as "The Purchaser" is desirous of awarding work for "Survey, Design, Supply, Erection, Installation, Testing, Commissioning, Handing over of 02 nos GIS Grid Substations along with associated Civil work (Package A) and 09 nos Cable In-feed/Laying works(Package B1 & B2) on Turnkey Basis" to single/multiple contractors.

2.00 SCOPE OF WORK

2.01 The scope of work under this contract shall include the turnkey execution on End to End Basis, including but not limited to Design, Engineering, Manufacture, Shop Testing, Inspection, Packing, Dispatch, Supply, Loading, Unloading, Storage At Site, Assembly, Erection, Complete Pre-Commissioning Checks, Testing & Commissioning at Site, Obtaining Statutory Clearance & Certification From Electrical Inspector And Handing Over Of Complete Projects Covered Under Scope Of this tender To BSES Rajdhani Power Ltd. (BRPL) including comprehensive Marine cum Storage cum Erection Insurance Policy (MSE) "on Turnkey Basis".

Single purchase order will be placed for Supply & Services (ETC/Civil) which inter-alia includes the Scope of Work as mentioned/required.

3.00 DISCLAIMER

3.01 This Document includes statements, which reflect various assumptions, which may or may not be correct. Each Bidder/Bidding Consortium should conduct its estimation and analysis and should check the accuracy, reliability and completeness of the information in this Document and obtain independent advice from appropriate sources in their interest.

3.02 Neither Purchaser nor its employees will have any liability whatsoever to any Bidder or any other person under the law or contract, the principles of restitution or unjust enrichment or otherwise for any loss, expense or damage whatsoever which may arise from or be incurred or suffered in connection with anything contained in this document, any matter deemed to form part of this Document, provision of Services and any other information supplied by or on behalf of Purchaser or its employees, or otherwise a rising in any way from the selection process for the Supply.

3.03 Though adequate care has been taken while issuing the Bid document, the Bidder should satisfy itself that the Documents are complete in all respects. Intimation of any discrepancy shall be given to this office immediately.

3.04 This Document and the information contained herein are Strictly Confidential and are for the use of only the person(s) to whom it is issued. It may not be copied or distributed by the recipient to third parties (other than in confidence to the recipient's professional advisors).

4 COST OF BIDDING

4.01 The Bidder shall bear all costs associated with the preparation and submission of its Bid and the Purchaser will in no case be responsible or liable for those costs.

B. BIDDING DOCUMENTS

5.00 BIDDING DOCUMENTS

5.01 The Scope of Work, Bidding Procedures and Contract Terms are described in the Bidding Documents.

5.02 The Bidder is expected to examine the Bidding Documents, including all Instructions, Forms, Terms and Specifications. Failure to furnish all information required by the Bidding Documents or submission of a Bid not substantially responsive to the Bidding Documents in every respect may result in the rejection of the Bid.

6.00 AMENDMENT OF BIDDING DOCUMENTS

6.01 At any time before the deadline for submission of Bids, the Purchaser may for any reason, whether at its initiative or in response to a clarification requested by a prospective Bidder, modify the Bidding Documents by Amendment.

6.02 The Amendment shall be part of the Bidding Documents, pursuant to Clause 5.01, and it will be notified on the website **www.bsesdelhi.com** and the same will be binding on them.

6.03 To afford prospective Bidders reasonable time in which to take the Amendment into account in preparing their Bids, the Purchaser may, at its discretion, extend the deadline for the submission of Bids. The same shall be published as a corrigendum on the website **www.bsesdelhi.com**

6.04 Purchaser shall reserve the rights to the following:
a) Extend the due date of submission,
b) Modify the tender document in part/whole,
c) Cancel the entire tender

6.05 **Bidders are requested to visit the website regularly for any modification/clarification/corrigendum/addendum of the bid documents.**

C. PREPARATION OF BIDS

7.00 LANGUAGE OF BID

7.01 The Bid prepared by the Bidder, and all correspondence and documents relating to the Bid exchanged by the Bidder and the Purchaser, shall be written in the English Language. Any printed literature furnished by the Bidder may be written in another language, provided that this literature is accompanied by an English translation, in which case, for purposes of interpretation of the Bid, the English translation shall govern.

8.00 DOCUMENTS COMPRISING THE BID

8.01 The Bid prepared and submitted by the Bidder shall comprise the following components:

(a) All the Bids must be accompanied by the required Tender Fees and EMD as mentioned in the tender.

(b) PART A - Technical Bid and

(c) PART B - Financial Bid

9.00 BID FORM

9.01 The Bidder shall submit the Bid Form with the Bidding Documents.

10.00 EMD

10.01 Pursuant to Clause 8.0(a) above, the bidder shall furnish, as part of its bid, an EMD amounting to as specified in Section I. The EMD is required to protect the Purchaser against the risk of Bidder's conduct which will warrant forfeiture.

The EMD shall be denominated in any of the following forms**:**

(a) Bank Guarantee drawn in favour of BSES Rajdhani Power Ltd, payable at Delhi or
(b) Fixed Deposit (lien marked in favour of BSES Rajdhani Power Limited) payable at Delhi.
(c) Online transfer of requisite amount through IMPS/NEFT/RTGS to BRPL account mentioned herein in **Appendix II - BRPL BANK DETAILS WITH IFSC CODE**.

EMD shall be valid for One Hundred Eighty (180) days after the due date of submission drawn in favour of BSES Rajdhani Power Ltd.

The EMD may be forfeited in the case of:

(a) the Bidder withdraws its bid during the period of specified bid validity

or

(b) the case of a successful Bidder, if the Bidder does not

(i) Accept the Purchase Order/Work Order, or

(ii) Furnish the required performance security BG.

11.00 BID PRICES

11.01 Bidders shall quote for the entire Scope of Supply/Work with a break-up of prices for individual items. The total Bid Price shall also cover all the Supplier's obligations mentioned in or reasonably to be inferred from the Bidding Documents in respect of Design, Supply, and Transportation to the site, all in accordance with the requirement of the Bidding Documents. The Bidder shall complete the appropriate Price Schedules included herein, stating the Unit Price for each item & total Price.

11.02 The prices offered shall be inclusive of all costs as well as Duties, Taxes or Levies paid or payable during the execution of the supply work, a breakup of price constituents, should be there.

11.03 Prices quoted by the Bidder shall be **"Firm"** and not subject to any price adjustment during the performance of the Contract. **A Bid submitted with an adjustable price/Price Variation Clause will be treated as non-responsive and rejected.**

12.00 BID CURRENCIES

12.01 Prices shall be quoted in Indian Rupees Only.

13.00 PERIOD OF VALIDITY OF BIDS

13.01 Bids shall remain valid for 180 days from the due date of submission of the Bid.

13.02 Notwithstanding Clause 13.01 above, the Purchaser may solicit the Bidder's consent to an extension of the Period of Bid Validity. The request and the responses thereto shall be made in writing and sent by post/courier.

14.00 ALTERNATIVE BIDS

14.01 Bidders shall submit Bids, which comply with the Bidding Documents. Alternative Bids will not be considered. The attention of Bidders is drawn to the provisions regarding the rejection of Bids in the terms and conditions, which are not substantially responsive to the requirements of the Bidding Documents.

15.00 FORMAT AND SIGNING OF BID

15.01 The original Bid Form and accompanying documents, must be received by the Purchaser at the date, time and place specified pursuant to Clauses 15.0 and 16.0.

15.02 The original Bid shall be typed or written in indelible ink and shall be signed by the Bidder or a person or persons duly authorized to sign on behalf of the Bidder. Such authorization shall be indicated by written Power-of-Attorney accompanying the Bid. The Bid submitted on behalf of companies registered with the Indian Companies Act, for the time being in force, shall be signed by persons duly authorized to submit the Bid on behalf of the Company and shall be accompanied by certified true copies of the resolutions, extracts of Articles of Association, special or general Power of Attorney etc. to show clearly the title, authority and designation of persons signing the Bid on behalf of the Company. Satisfactory evidence of the authority of the person signing on behalf of the Bidder shall be furnished with the bid. A bid by a person who affixes to his signature the words 'President', 'Managing Director', 'Secretary', 'Agent' or other designations without disclosing his principal will be rejected.

The Bidder's name stated on the Proposal shall be the exact legal name of the firm.

15.03 The Bid shall contain no interlineations, erasures or overwriting except as necessary to correct errors made by the Bidder, in which case such corrections shall be initiated by the person or persons signing the Bid.

D. SUBMISSION OF BIDS

16.00 SEALING AND MARKING OF BIDS

16.01 Bid submission: Bids have to be mandatorily submitted only through the e-procurement portal of BSES Delhi. Bids submitted through any other form/ route shall not be admissible.

16.02 However, documents that necessarily have to be submitted in originals like EMD or Tender Fee (in the form of BG/ DD /FD as applicable) and any other documents mentioned in the tender documents have to be submitted at the BRPL office before the due date & time of submission. The Technical Documents and the EMD shall be enclosed in a sealed envelope and the said envelope shall be superscribed with — "Technical Bid & EMD". All the envelopes should bear the Name and Address of the Bidder and mark for the Original. The envelopes should be superscribed with — "Tender No. & Due date of opening".

16.03 The Bidder has the option of sending the Bids in person. Bids submitted by Email/Telex/Telegram /Fax will be rejected. No request from any Bidder to the Purchaser to collect the proposals from Courier/Airlines/Cargo Agents etc. shall be entertained by the Purchaser.

17.00 DEADLINE FOR SUBMISSION OF BIDS

17.01 The Bid must be received by the Purchaser on or before the due date & time of submission.

17.02 The Purchaser may, at its discretion, extend the deadline for the submission of Bids by amending the Bidding Documents in accordance with Clause 6.0, in which case all rights and obligations of the Purchaser and Bidders previously subject to the deadline will thereafter be

subject to the deadline as extended.

18.00 ONE BID PER BIDDER

18.01 Each Bidder shall submit only one Bid by itself. No Joint venture is acceptable for Package-A. A Bidder who submits or participates in more than one Bid will cause all those Bids to be rejected.

19.00 LATE BIDS

19.01 No Bid will be received by the Purchaser after the deadline for submission of Bids prescribed by the Purchaser, pursuant to Clause 17.0.

20.00 MODIFICATIONS AND WITHDRAWAL OF BIDS

20.01 The Bidder is not allowed to modify or withdraw its Bid after the Bid's due date & time of submission subject to any corrigendum/addendum/modifications in the tender documents uploaded to the website.

E. EVALUATION OF BID

21.00 PROCESS TO BE CONFIDENTIAL

21.01 Information relating to the examination, clarification, evaluation and comparison of Bids and recommendations for the award of a contract shall not be disclosed to Bidders or any other persons not officially concerned with such process. Any effort by a Bidder to influence the Purchaser's processing of Bids or award decisions may result in the rejection of the Bidder's Bid.

22.00 CLARIFICATION OF BIDS

22.01 To assist in the examination, evaluation and comparison of Bids, the Purchaser may, at its discretion, ask the Bidder for a clarification of its Bid. All responses to requests for clarification shall be in writing and no change in the price or substance of the Bid shall be sought, offered or permitted.

23.00 PRELIMINARY EXAMINATION OF BIDS / RESPONSIVENESS

23.01 Purchaser will examine the Bids to determine whether they are complete, whether any computational errors have been made, whether required sureties have been furnished, whether the documents have been properly signed and whether the Bids are generally in order. Purchaser may ask for submission of original documents to verify the documents submitted in support of qualification criteria.

23.02 Arithmetical errors will be rectified on the following basis. If there is a discrepancy between the unit price and the total price per item that is obtained by multiplying the unit price and quantity, the unit price shall prevail and the total price per item will be corrected. If there is a discrepancy between the Total Amount and the sum of the total price per item, the sum of the total price per item shall prevail and the Total Amount will be corrected.

23.03 Prior to the detailed evaluation, Purchaser will determine the substantial responsiveness of each Bid to the Bidding Documents including production capability and acceptable quality of the Goods offered. A substantially responsive Bid is one, which conforms to all the terms and conditions of the Bidding Documents without material deviation.

23.04 Bid determined as not substantially responsive will be rejected by the Purchaser and/or the Purchaser and may not subsequently be made responsive by the Bidder by correction of the non-conformity.

24.00 EVALUATION AND COMPARISON OF BIDS

24.01 The evaluation of Bids shall be done based on the delivered cost competitiveness basis.

24.02 The evaluation of the Bids shall be a stage-wise procedure. The following stages are identified for evaluation purposes: In the first stage, the Bids will be subjected to a responsiveness check. The Technical & qualifying Proposals and the Conditional ties of the Bidders will be evaluated.

Subsequently, the Financial Proposals along with Supplementary Financial Proposals, if any, of Bidders with Techno-commercially Acceptable Bids shall be considered for final evaluation.

24.03 The Purchaser's evaluation of a Bid will take into account, in addition to the Bid price, the following factors, in the manner and to the extent indicated in this Clause:

(a) Delivery Schedule

(b) Conformance to Qualifying Criteria

(c) Deviations from Bidding Documents

Bidders shall base their Bid price on the terms and conditions specified in the Bidding Documents.

The cost of all quantifiable deviations and omissions from the specification, terms and conditions specified in the Bidding Documents shall be evaluated. **The Purchaser may make its own assessment of the cost of any deviation to ensure a fair comparison of Bids.**

24.04 Any price adjustments that result from the above procedures shall be added for comparative evaluation only to arrive at an "Evaluated Bid Price". Bid Prices quoted by Bidders shall remain unaltered.

F. AWARD OF CONTRACT

25.00 CONTACTING THE PURCHASER

25.01 If any Bidder wishes to contact the Purchaser on any matter related to the Bid, from the time of Bid opening to the time of contract award, the same shall be done in writing only.

25.02 Any effort by a Bidder to influence the Purchaser and/or in the Purchaser's decisions in respect of Bid evaluation, Bid comparison or Contract Award, will result in the rejection of the Bidder's Bid.

26.00 THE PURCHASER'S RIGHT TO ACCEPT ANY BID AND TO REJECT ANY OR ALL BIDS

26.01 Submission of bids shall not automatically construe qualification for evaluation. The Purchaser reserves the right to accept or reject any Bid and to annul the Bidding process and reject all Bids at any time prior to the award of the Contract, without thereby incurring any liability to the affected Bidder or Bidders or any obligation to inform the affected Bidder or Bidders of the grounds for the Purchaser's action.

27.00 AWARD OF CONTRACT

27.01 The Purchaser will award the Contract to the successful Bidder whose Bid has been Determined to be the lowest-evaluated responsive Bid, provided further that the Bidder has been determined to be qualified to satisfactorily perform the Contract. Purchaser reserves the right to award the order to other bidders in the tender, provided it is required for the timely execution of the project & provided he agrees to come to the lowest rate. Purchaser reserves the right to

distribute the entire tender quantity at its own discretion without citing any reasons thereof.

27.02 The Purchaser intends to issue Composite Order which will includes the Scope of Work as mentioned/required in the NIT viz.
a) Supply
b) Installation/Erection, Testing & Commissioning
c) Civil (If applicable)

28.00 THE PURCHASER'S RIGHT TO VARY QUANTITIES

28.01 The Purchaser reserves the right to vary the quantity i.e. increase or decrease the numbers/quantities without any change in terms and conditions during the execution of the Order.

29.00 LETTER OF INTENT/ NOTIFICATION OF AWARD

29.01 The Letter of Intent/ Notification of Award shall be issued to the successful Bidder whose bids have been considered responsive, techno-commercially acceptable and evaluated to be the lowest (L1). The successful Bidder shall be required to furnish a letter of acceptance within 7 days of the issue of the letter of intent /Notification of Award by Purchaser.

30.00 CONTRACT PERFORMANCE BANK GUARANTEE (CPBG)

30.01 Within 28 days of the receipt of Letter of Intent/Notification of Award from the Purchaser, the successful Bidder shall furnish the Performance Bank Guarantee towards faithful performance of Contract for an amount of 10% (Ten percent) of the Total Contract Price (including GST). The Performance Bond shall be valid up to contract completion plus 3 months claim period. Upon submission of the performance security, the EMD shall be released.

31.00 CORRUPT OR FRAUDULENT PRACTICES

31.01 The Purchaser requires that the Bidders observe the highest standard of ethics during the procurement and execution of the Project. In pursuance of this policy, the Purchaser:

(a) Defines, for this provision, the terms set forth below as follows:

(i) "Corrupt practice" means behaviour on the part of officials in the public or private sectors by which they improperly and unlawfully enrich themselves and/or those close to them, or induce others to do so, by misusing the position in which they are placed, and it includes the offering, giving, receiving, or soliciting of anything of value to influence the action of any such official in the procurement process or contract execution; and

(ii) "Fraudulent practice" means a misrepresentation of facts to influence a procurement process or the execution of a contract to the detriment of the Purchaser, and includes collusive practice among Bidders (before or after Bid submission) designed to establish Bid prices at artificial non -competitive levels and to deprive the Purchaser of the benefits of free and open competition.

(b) Will reject a proposal for award if it determines that the Bidder recommended for award has engaged in corrupt or fraudulent practices in competing for the contract in question;

(c) Will declare a firm ineligible, either indefinitely or for a stated period, to be awarded a contract if it at any time determines that the firm has engaged in corrupt or fraudulent practices in competing for, or in executing a contract.

31.02 Furthermore, Bidders shall be aware of the provision stated in the Terms and Conditions of the Contract.

32.00 STATUTORY GUIDELINES & REGULATIONS

32.01 The bidder shall make himself fully aware & familiarize himself with all applicable laws/guidelines/regulations.

33.00 SAFETY

33.01 Safety related requirements as mentioned in our safety Manual put on the Company's website which can be accessed at http://www.bsesdelhi.com. All bidders shall strictly abide by the guidelines provided in the safety manual at all relevant stages during the contract period.

34.00 PRIORITY OF CONTRACT DOCUMENTS

34.01 The several documents forming the Agreement are to be taken as mutually explanatory of one another, but in case of ambiguities or discrepancies, the same shall be explained and adjusted by the company, who shall, accordingly, issue suitable instructions thereon to the Contractor. In such event, unless otherwise provided in the agreement or explained by way of instructions by the company, as mentioned above, the priority of the documents forming the Agreement shall be as follows:

i) Contract Agreement/Purchase Order.
(a)Special Conditions of Contract
(b)General Conditions of Contract
(ii)The Letter of Acceptance/ Intent
(iii)Agreed Minutes of the Tender Negotiation Meetings
(iv) Agreed Minutes of the Tender Technical Meetings
(v) The Priced Bill of Quantities
(vi)The Technical Specifications / Scope of work
(vii)The Tender document, including all Appendices and/or Addenda, Corrigendum the latest taking precedence.

In the event of any conflict between the above-mentioned documents, the more stringent requirement or conditions which shall be favourable to the company shall govern and the decision of the company/BRPL shall be final and binding upon the parties.

BSES

BSES RAJDHANI POWER LIMITED

APPENDIX I ANNEXURE – 1.01

BID INDEX FOR PART-A (TECHNICAL BID)

(To be filled & submitted on Bidder Letter Head, Bidders document submission should have following main categories as outlined below and should have page numbers printed at the bottom of each page with this page as page number 1. The page number should be in "Page X of Y" format. Separator with document description shall be provided before each document)

NIT No.:

Bidder's Name:

Bidder's Bid Reference No. & Date:

S. No.	Particulars	Bid Pdf Page No.	
		From	To
A.1	**Bid Details**		
1.	Bid Index for Part-A (Technical Bid) as per APPENDIX I ANNEXURE - 1.01	1	
2.	Cover Letter, If any		
3.	Bid Form (Unpriced) Duly Signed as per APPENDIX I ANNEXURE - 1.02		
4.	Tender Fee Details as per APPENDIX I ANNEXURE - 1.03		
5.	EMD Details as per APPENDIX I ANNEXURE - 1.04 & 1.05		
6.	Power-of-Attorney / Authorization Letter		
A.2	**Technical Bid**		
7.	Communication Details of the Bidder as per APPENDIX I ANNEXURE - 1.06		
8.	Manufacturer Authorization Form (as applicable) as per APPENDIX I ANNEXURE - 1.07		
9.	Technical Qualifying Criteria Compliance Index & Documents as per APPENDIX I ANNEXURE - 1.08, 1.09, 1.10		
10.	Schedule of Technical Deviations (along with soft editable Excel copy) as per APPENDIX I ANNEXURE - 1.11		
11.	Guaranteed Technical particulars (GTP) as per specification		
12.	All Drawings as per specification		
13.	Type Test Reports (Sequence of Tests shall be strictly in accordance with relevant IS/IEC) as per APPENDIX I ANNEXURE - 1.12		
14.	Sample Submission Details (If applicable as per Specification) as per APPENDIX I ANNEXURE - 1.13		
15.	Product Catalogue (If applicable)		
16.	Manufacturer's quality assurance plan (as applicable)		
17.	Other drawings/ documents mentioned in technical specification		
18.	Testing Facilities		
A.3	**Commercial Bid**		
19.	Company Profile/Organogram/Organization Chart & Manpower Details		
20.	Commercial Qualifying Criteria Compliance Index & Documents as per APPENDIX I ANNEXURE - 1.14		
21.	Undertakings as per APPENDIX I ANNEXURE - 1.15		
22.	Schedule of Commercial Deviations (along with soft editable Excel copy) as per APPENDIX I ANNEXURE - 1.16		
21.	Acceptance form for participation in reverse auction event as per APPENDIX I ANNEXURE - 1.17		
24.	Acceptance of Commercial Terms and Conditions as per APPENDIX II ANNEXURE - 2.05		
25.	Un Price Bid Duly Signed (Volume - II Financial Bid (Price Format))		
26.	NIT Document complete Signed & Stamped		

ANNEXURE – 1.02

BID FORM

To

Head of Department
Contracts & Material Deptt.
BSES Rajdhani Power Ltd
BSES Bhawan, Nehru Place,
Delhi 110019

Sir,

1. We understand that BRPL is desirous of procuring…… for it's licensed distribution network area in Delhi.
2. Having examined the Bidding Documents for the above-named works, we the undersigned, offer to deliver the goods in full conformity with the Terms and Conditions and technical specifications for the sum indicated in the Financial Bid or such other sums as may be determined in accordance with the terms and conditions of the contract. The amounts are in accordance with the Price Schedules attached herewith and are made part of this bid.
3. If our Bid is accepted, we undertake to deliver the entire goods as per the delivery schedule mentioned in Section IV from the date of award of the purchase order/letter of intent.
4. If our Bid is accepted, we will furnish a performance bank guarantee for due performance of the Contract in accordance with the Terms and Conditions.
5. We agree to abide by this Bid for 180 days from the due date of bid submission and it shall remain binding upon us and may be accepted at any time before the expiration of that period.
6. We declare that we have studied the provision of Indian Laws for the supply/services of equipments/materials and the prices have been quoted accordingly.
7. Unless and until Letter of Intent is issued, this Bid, together with your written acceptance thereof, shall constitute a binding contract between us.
8. We understand that you are not bound to accept the lowest or any bid you may receive.
9. There is provision for Resolution of Disputes under this Contract, by the Laws and Jurisdiction of Contract.

Dated this..... day of..... 20XX

Signature..... In the capacity of ……

.....duly authorized to sign for and on behalf of

(IN BLOCK CAPITALS) .....

BSES

ANNEXURE – 1.03

TENDER FEE DETAILS

a. Amount (Rs.) : **1,180/- (One Thousand One Hundred Eighty Only)**

b. Mode of Payment : DD or online transfer through IMPS/NEFT/RTGS (select any one)

c. DD /UTR No. (As applicable) : .....

d. Dated : .....

e. Bidders Bank Account No. : .....

f. Name of the Bank : .....

g. Address of the Bank : .....

h. IFSC Code of the Bank : .....

BSES

ANNEXURE – 1.04

EMD DETAILS

a. EMD Amount (Rs.) : .....

b. Mode of Payment : BG/FD/online transfer through IMPS/NEFT/RTGS (select any one)

c. BG/FD/UTR No. (As applicable): .....

d. Dated : .....

e. BG valid up to : .....

f. BG Claim period up to : .....

g. Bidders Bank Account No. : .....

h. Name of the Bank : .....

i. Address of the Bank : .....

j. IFSC Code of the Bank : .....

BSES

ANNEXURE – 1.05

(FORMAT FOR EMD BANK GUARANTEE)

(To be issued in a Non-Judicial Stamp Paper of Rs.50/-purchased in the name of the bank)

Whereas [*name of the Bidder*] (hereinafter called the "Bidder") has submitted its bid dated [*date of submission of bid*] for the supply of [*name and/or description of the goods*] (hereafter called the "Bid").

KNOW ALL PEOPLE by these presents that WE [name of bank] at [*Branch Name and address*], having our registered office at [*address of the registered office of the bank*] (hereinafter called the "Bank"), are bound unto BSES Rajdhani Power Ltd., with its Corporate Office at BSES Bhawan, Nehru Place, New Delhi -110019, (hereinafter called - the "Purchaser") in the sum of Rs…… (Rupees……. only) for which payment well and truly to be made to the said Purchaser, the Bank binds itself, its successors, and assigns by these presents.

Sealed with the Common Seal of the said Bank this_____ day of_____ 20____.

The conditions of this obligation are:

1 If the Bidder withdraws its Bid during the period of bid validity specified by the Bidder on the Bid Form; or

2. If the Bidder, having been notified of the acceptance of its Bid by the Purchaser during the period of bid validity:

(a) fails or refuses to execute the Contract Form, if required; or

(b) fails or refuses to furnish performance security, In accordance with the Instructions to Bidders/Terms and Conditions;

We undertake to pay to the Purchaser up to the above amount upon receipt of its first written demand, without the Purchaser having to substantiate its demand, provided that is its demand the purchaser will note that amount claimed by it is due to it, owing to the occurrence of one or both of the two condition(s), specifying the occurred condition or condition(s).

This guarantee will remain in force up to and including One Hundred Eighty (180) days after the due date of submission bid, and any demand in respect thereof should reach the Bank not later than the above date.

(Stamp & signature of the bank)

Signature of the witness

BSES

ANNEXURE – 1.06

COMMUNICATION DETAILS OF THE BIDDER

S. No.	Designation	Name	Mobile No.	E-mail id
1	CEO / MD			
2	Sales / Marketing Head			
3	Sales Representative / Key Account Manager (KAM)			
4	Technical Head			
5	Manufacturer Plant / Operations Head			
6	Post Order Execution In Charge			
7	Authorized contact person (Primary responsibility for the Bid)			
8	Authorized contact person (Secondary responsibility for the Bid)			

BSES

ANNEXURE – 1.07

MANUFACTURER AUTHORIZATION FORM
(To be submitted on OEM's Letter Head)

Date: …….
Tender No.: …….

To

Head of Department
Contracts & Material Deptt.
BSES Rajdhani Power Ltd
BSES Bhawan, Nehru Place,
Delhi 110019

Sir,

WHEREAS M/s. *[name of OEM]*, who are official manufacturers of …… having factories at *[address of OEM]* do hereby authorize M/s *[name of bidder]* to submit a Bid in relation to the Invitation for Bids indicated above, the purpose of which is to provide the following Goods, manufactured by us ……and to subsequently negotiate and sign the Contract.

We hereby extend our full guarantee and warranty by the Conditions of the Contract or as mentioned elsewhere in the Tender Document, concerning the Goods offered by the above firm in reply to this Invitation for Bids.

We hereby confirm that in case, the channel partner fails to provide the necessary services as per the Tender Document referred above, M/s *[name of OEM]* shall provide standard warranty on the materials supplied against the contract. The warranty period and inclusion/exclusion of parts in the warranty shall remain the same as defined in the contract issued to our channel partner against this tender.

Yours Sincerely,
For ……..

Authorized Signatory

BSES

ANNEXURE – 1.08

QUALIFYING CRITERIA COMPLIANCE INDEX - TECHNICAL CRITERIA				
S No	**Qualifying Criteria Description as per section 1 clause 2.00**	**Documentary Proof Description**	**Documentary Proof Enclosed on Bid Page No.**	
			From	**To**
1				
2				
3				
4				
5				

BSES

ANNEXURE – 1.09

LIST OF PURCHASE ORDERS EXECUTED & DELIVERY DETAILS IN SUPPORT OF QUALIFYING REQUIREMENTS													
S No	Item Details				PO & Execution Details					Customer Name	End User (shall be Utility/ SEB's/ PSU's) name and details	PO copy, MDCC /Delivery completion certificates/ Invoice Copies enclosed on Bid Page no.	
	Item	Model	Voltage Rating (kV)	Current Rating (A)	PO No	PO Date	PO Qty	Executed Qty	Execution Year			From	To
Total							∑	∑					

Note – Only items relevant as per qualifying requirements should be included in the list.

BSES

ANNEXURE – 1.10

LIST OF PERFORMANCE CERTIFICATES IN SUPPORT OF QUALIFYING REQUIREMENT														
S No	Item Details				PO No	Supplied/ Commissioning		Performance Certificate Issue Date	Performance Certificate Issued By End User (Utility/SEB/Govt Org.)	Contact Details of Issuing Person			Enclosed on Bid Page No.	
	Item	Model	Voltage Rating (kV)	Current Rating (A)		Qty.	Date			Name	Email	Mobile	From	To
Total						∑								

Note –

1. **Only items relevant as per qualifying requirement should be included in the list.**
2. **Only Performance certificates issued by End User (utilities/ SEB's/PSU's only) will be accepted as per qualifying requirement.**

BSES

ANNEXURE – 1.11

SCHEDULE OF DEVIATIONS - TECHNICAL

Vendor shall refrain from taking any deviations on this TENDER. Still, in case of any deviations, all such deviations from this tender shall be set out by the Bidder, Clause by Clause in this schedule and submit the same as a part of the Technical Bid.

Unless **specifically** mentioned in this schedule, the tender shall be deemed to confirm the BRPL's specifications:

Technical Deviations:-

S. No.	NIT Pdf Page No.	NIT Clause No.	NIT Clause Descriptions	Details of Clarification/deviation with justifications

Note – Please enclose detailed GTP and drawings as per specification after the technical deviation sheet

Seal of the Bidder:

Signature:

Name:

BSES

ANNEXURE – 1.12

TYPE TEST REPORTS (SEQUENCE OF TESTS SHALL BE STRICTLY IN ACCORDANCE WITH RELEVANT IS/IEC)								
S No	Test Description	Reference Standard	Reference Standard Clause No.	Name of Testing Lab	Test Report Reference Number	Date of Issue of Report	Report Enclosed on Bid Page No	
							From	To
1								
2								
3								
4								
5								
6								
7								

BSES

ANNEXURE – 1.13

SAMPLE SUBMISSION DETAILS (IF APPLICABLE AS PER SPECIFICATION)		
S No	**Description**	**Bidder's Response**
1	Samples submitted with the bid	Yes/No
1	Sample Type -1	
1.1	Model Number	
1.2	Number of samples	
2	Sample Type -2	
2.1	Model Number	
2.2	Number of samples	

BSES

ANNEXURE – 1.14

QUALIFYING CRITERIA COMPLIANCE INDEX - COMMERCIAL CRITERIA				
S No	**Qualifying Criteria Description as per section 1 clause 2.00**	**Documentary Proof Description**	**Documentary Proof Enclosed on Bid Page No.**	
			From	**To**
1				
2				
3				
4				
5				

BSES

ANNEXURE – 1.15

UNDERTAKINGS
(To be submitted on Bidders Letter Head)

Date: …….

Tender No.: ……..

To

Head of Department
Contracts & Material Deptt.
BSES Rajdhani Power Ltd
BSES Bhawan, Nehru Place,
Delhi 110019

Sir,

We *[name of bidder]*, …… , hereby undertake and confirm the following:

- *[name of bidder]* has "No Litigation" pending with the BRPL or its Group/Associates Companies as on the date of bid opening.
- *[name of bidder] has* not been blacklisted/debarred by any central/state government institution/Electricity utilities as on the date of bid opening.
- *[name of bidder]* shall comply with all the statuary compliances as per the laws/rules etc. before the start of the supply/work.
- All documents, certificates, and information submitted by us against this tender are genuine, true, and correct. Copies provided have been made from the original documents. In the event that any document, certificate, or information is found to be false, forged, or misleading, BRPL shall have the right, at its sole discretion, to take appropriate legal action, including forfeiture of EMD and disqualification from participation in future tenders of BRPL and its group companies, for an indefinite period or as decided by BRPL.

Yours Sincerely,
For ……..

Authorized Signatory
Name : _____

Designation : _____

Seal : _____

ANNEXURE – 1.16

SCHEDULE OF DEVIATIONS - COMMERCIAL

Vendor shall refrain from taking any deviations on this TENDER. Still, in case of any deviations, all such deviations from this tender shall be set out by the Bidder, Clause by Clause in this schedule and submit the same as a part of the Technical Bid.

Unless **specifically** mentioned in this schedule, the tender shall be deemed to confirm the BRPL's specifications:

Commercial Deviations:-

S. No.	NIT Pdf Page No.	NIT Clause No.	NIT Clause Descriptions	Details of Clarification/deviation with justifications

By signing this document we hereby withdraw all the deviations whatsoever taken anywhere in this bid document and comply with all the terms and conditions, technical specifications, scope of work etc. as mentioned in the standard document except those mentioned above.

Seal of the Bidder:

Signature:

Name:

BSES

ANNEXURE – 1.17

ACCEPTANCE FORM FOR PARTICIPATION IN REVERSE AUCTION EVENT

(To be signed and stamped by the bidder)

BSES Rajdhani Power Ltd (hereinafter referred to as **"BRPL"**) intends to use the reverse auction through the SAP-SRM tool as an integral part of the entire tendering process. All the bidders who are found as techno commercial qualified based on the tender requirements shall be eligible to participate in the reverse auction event.

The following terms and conditions are deemed as accepted by the bidder on participation in the bid event:

1. BRPL shall provide the user ID and password to the authorized representative of the bidder. (Authorization letter in lieu of the same be submitted along with the signed and stamped acceptance form)
2. BRPL will make every effort to make the bid process transparent. However, the award decision by BRPL would be final and binding on the bidder.
3. The bidder agrees to non-disclosure of trade information regarding the purchase, identity of BRPL, bid process, bid technology, bid documentation, bid details, etc.
4. The bidder is advised to understand the auto bid process to safeguard themselves against any possibility of non-participation in the auction event.
5. In case of bidding through internet medium, bidders are further advised to ensure availability of the entire infrastructure as required at their end to participate in the auction event. Inability to bid due to telephone line glitches, internet response issues, software or hardware hangs; power failure or any other reason shall not be the responsibility of BRPL.
6. In case of intranet medium, BRPL shall provide the infrastructure to bidders, further, BRPL has sole discretion to extend or restart the auction event in case of any glitches in infrastructure observed which has restricted the bidders from submitting the bids to ensure fair & transparent competitive bidding. In case an auction event is restarted, the best bid already available in the system shall become the start price for the new auction.
7. In case the bidder fails to participate in the auction event due to any reason whatsoever, it shall be presumed that the bidder has no further discounts to offer and the initial bid as submitted by the bidder as a part of the tender shall be considered as the bidder's final no regret offer. Any offline price bids received from a bidder in lieu of non-participation in the auction event shall be outright rejected by BRPL.
8. The bidder shall be prepared with competitive price quotes on the day of the reverse auction event.
9. The prices as quoted by the bidder during the auction event shall be inclusive of all the applicable taxes, duties and levies and shall be FOR Landed Cost basis at the BRPL site.
10. The prices submitted by a bidder during the auction event shall be binding on the bidder.
11. No requests for time extension of the auction event shall be considered by BRPL.
12. The original price bids submitted by the bidders shall be proportionately reduced for each line item, based on the final all-inclusive prices determined at the conclusion of the auction event, to arrive at the final contract value.

Signature & seal of the Bidder

ANNEXURE – 1.18

CODE OF CONDUCT FOR SUPPLIERS

BSES expects suppliers including their personnel (employees or sub-contractors) to support, embrace and enact the following Code of Conduct (CoC), apart from complying with all national and international regulations and laws that are applicable at any given time. BSES encourages its suppliers to go beyond compliance and embrace the principles of sustainability. BSES will support training and capacity-building programmes undertaken by suppliers, which promote awareness on sustainability and responsible business practices. BSES shall incorporate regulatory compliance and ESG performance as key criteria based on requirements as stated in the Code during evaluation of the suppliers.

A. Promote Environmental Sustainability

All suppliers support a precautionary approach to environmental issues and undertake initiatives to promote better environmental responsibility. To this end, suppliers will

1. Reduce resource consumption and conserve natural resources:
   - 1.1. Conduct all operations, sourcing, manufacture, distribution of products and the supply of services with the aim of protecting and preserving the environment.
   - 1.2. Use natural resources rationally and work towards reducing resource consumption (water, energy, fuel, electricity, other materials etc.) and GHG emissions.
   - 1.3. Identify environmental risks and set up appropriate prevention measures.
2. Prevent pollution and reduce waste generation
   - 2.1. Maintain all required official permits, licenses and registrations.
   - 2.2. Prevent contamination, limit waste generation, and avoid or minimise adverse impact on the environment and biodiversity by facilitating reusing and recycling material.
   - 2.3. Clearly monitor the precautions to be taken during operations & maintenance in case of emission of heat, vibrations, radioactive rays, noise or similar.
   - 2.4. Use only those chemicals and aerosols with very low or zero ODP (Ozone Depletion Potential), which are allowed as per the regulatory provisions.
   - 2.5. Ensure that all the chemical and hazardous substances are accompanied by the manufacturer MSDS (Material Safety Data Sheet) during transport, storage, use and disposal, and that instructions mandated be strictly followed. No chemical and hazardous substance shall be received without a MSDS document. All the applicable regulatory guidelines shall be adhered strictly for the procurement, transport, storage, use and disposal of such harmful and hazardous chemicals.
   - 2.6. Provide written instructions about handling and/or disposal of equipment and product during the life cycle if special handling is required.

B. Commitment to Human Rights, Labour and the Society

Suppliers shall support, respect and protect human and labour rights and make sure their organisation/entity is not complicit in any kind of abuses and/or violations. In this regard, the suppliers must:

1. Fair working conditions
   - 1.1. Provide and maintain healthy and safe working conditions and welfare facilities for the employees in its establishment.
   - 1.2. Ensure that that wages and benefits of their employees and subcontractors are fair and

comply with applicable national and local laws as well as with contractual agreements.

1.3. Provide all workers, both permanent and non-permanent, with employment documents that are freely agreed to and which respect their legal and contractual rights.

2. Health & Safety

Ensure that the activities of suppliers do not harm the health and safety of their own employees, suppliers and subcontractors, local communities/population, and finally the users of its products and services, which is in accordance with the BSES's Mission Zero Harm in Health and Safety.

3. Child Labour

3.1. No person below 18 years shall be employed or permitted to work in any occupation or process.

3.2. Zero tolerance for any kind of child labour in their establishments and supply chain.

4. Forced Labour

4.1. Under no circumstance shall suppliers use forced labour[1], whether in form of compulsory or trafficked labour, indentured labour, bonded labour or other forms, through direct or indirect use of force and/or intimidation.

4.2. Any kind of slavery, mental and physical coercion, human trafficking and debt bondage in the supply chain shall not be tolerated.

5. Wages and Working hours

5.1. Ensure that all applicable regulations related to wages, overtime compensation and other legally mandated benefits of their employees and subcontractors are fair and comply with applicable national and local laws as well as with contractual agreements. Minimum wages are applicable as per applicable in central Act and State rules.

5.2. Ensure that maximum working hours laid down and are adhered to.

6. Freedom of Association and Collective Bargaining

6.1. Recognise and respect the rights of workers to freedom of association and collective bargaining. Workers are not intimidated or harassed in the exercise of their right to join or refrain from joining any organisation.

6.2. Ensure that all employees can communicate with the management regarding working conditions.

7. Non-Discrimination and Equal opportunity

7.1. Commit, within the scope of prevailing laws and statutes, to oppose all forms of discrimination[2].

7.2. Maintain a work environment free from any form of discrimination and harassment.

7.3. Refrain from discrimination in hiring and employment practices on grounds of skin colour, age, caste, gender, race, ethnicity, nationality, socio-economic background, physical or mental disability, religion, sexual orientation, marital status, pregnancy, dependants, political or religious opinion, ideology, union membership and personal or social circumstances. Special attention must be paid to the rights of workers most vulnerable to discrimination.

8. Zero Tolerance towards Harassment

8.1. Treat all employees with respect and dignity and furthermore ensure that their own suppliers treat their employees in the same manner.

8.2. No tolerance towards unacceptable treatment of employees, such as physical punishment or torture, sexual harassment[3], or abuse, mental or physical coercion or verbal abuse, or the threat of any such treatment.

8.3. No worker should be subjected to any physical, sexual, psychological, or verbal harassment, abuse or other form of intimidation.

C. Ethical Integrity and Legality

Suppliers shall demonstrate the highest standard of integrity, ethics, and business conduct.

1. Compliance with Applicable laws and regulations:

1.1. All activities must be carried out in compliance with the legislation that is applicable in the countries in which the suppliers operate.

1.2. All other applicable international laws and regulations must be complied with, including those relating to international trade (such as those relating to sanctions, export controls and reporting obligations), data protection and antitrust/ competition laws.

1.3. Avoid any conduct that could tarnish or damage the reputation of BSES.

2. Anti-Corruption & Anti Bribery

2.1. All forms of bribery and corruption are prohibited

2.2. Adequate measures and procedures should be in place to prevent bribery in all commercial dealings.

2.3. Maintain a policy of 'Zero Tolerance' of any practice that may be deemed to be corruption, either active or passive.

2.4. No tolerance for unacceptable conduct, which includes, but not limited to, non-compliance with anti- corruption laws and, directly or indirectly offering, promising, hiring or authorising payments in cash or in kind to any BSES employee, public official or any other person or entity, with intention of a) obtaining or retaining business b) Influencing business decisions; and/or c) securing an unfair advantage.

3. Conflict of Interest

3.1. All and any conflict of interest in any business dealings with BSES, of which the suppliers are aware, should be declared to BSES so that appropriate action can be taken.

3.2. Avoid a situation where there is a real or potential conflict of interest with BSES employees, or with their family or closely associated persons, that could affect the independence or objectivity of their professional actions or decisions. If avoidance is not possible, the suppliers should inform BSES of the situation so that appropriate action can be taken.

4. Insider Trading and Other Economic Crimes

4.1. Ensure that all business and commercial dealings are transparently performed and accurately recorded in the books and records.

4.2. Comply with applicable anti-money laundering laws, conduct business only with ethically responsible partners and receive funds only from legitimate sources.

4.3. Avoid actual or attempted participation in economic offences, such as (but not limited to) money laundering, criminal breach of trust, counterfeiting, criminal misappropriation of properties, forgery, cheating, extortion, embezzlement and fraud.

4.4. Refrain from insider trading. No confidential information regarding BSES is used to either engage, facilitate or support insider trading in BSES's shares.

4.5. Take necessary measures to detect and prevent any illicit or suspicious forms of payment and inform and/or report through established channels if it has any suspicion or concern in this regard.

5. Gifts & Hospitality

5.1. Any business entertaining/hospitality with BSES should be modest in value, appropriate, and compliant with the law and company policies, entirely for the purpose of maintaining good business relations and not intended to influence in any way BSES's decisions on future business relationship.

5.2. Only gifts/honorarium of nominal value accepted or offered on festivals, at conferences, etc. will be permitted. Such gifts should comply with local laws and customs (including cultural and religious festivals) and should not be prohibited under applicable law and should not include cash or cash equivalents, gold or other precious metals, gems or stones.

5.3. Neither receive nor offer or make, directly or indirectly, any illegal payments, remunerations, gifts, donations or comparable benefits that are intended, or perceived, to obtain uncompetitive favours for the conduct of its business with BSES.

5.4. Neither directly or indirectly offer any gift, entertainment, trip, discount, service, or other benefit to any official of BSES or his/her close relations which would or be capable of compromising, influencing, liable to corrupt the integrity and objectivity of that person.

6. Competition, Confidentiality and Data Privacy

6.1. All market survey/other entities information must be obtained and used legitimately and in compliance with all applicable laws and regulations.

6.2. No attempt should be made to divulge to BSES any information about any other entity in violation of any law or agreement.

6.3. Likewise, BSES's confidential information must not be shared with any Supplier unless expressly permitted by BSES in writing by authorised signatory under the respective purchase order or agreement, as the case may be.

7. Transparency and Ethics

7.1 Fair competition

Avoid any action that may constitute an illegal practice of unfair competition and ensure compliance with applicable competition laws.

7.2 Corporate image and reputation

Suppliers must NOT:

- Make false statements or provide any misleading information regarding its products/services.
- Give the impression of representing or being the spokesperson of BSES while getting associated with any religious/political party or for activities in their personal capacity.

8. Protection of Intellectual Property and No Misuse or Improper use of BSES's assets/ property

8.1. Respect and protect all confidential information and intellectual property of BSES.

8.2. Do not misuse and share assets of BSES and employ them only for the purpose of conducting the business for which they are duly authorised by BSES. These include tangible assets such as equipment and machinery, systems, facilities, materials, and resources and intangible assets such as intellectual property rights, processes, know how & technology, proprietary information, etc.

8.3. Safeguard, secure, and protect BSES's assets and information technology from theft, destruction, misappropriation, wastage, and abuse.

8.4. Promptly report loss, theft or destruction of any intellectual property and data of the Company or that of any Supplier.

9. Financial Records and Accuracy in Books

9.1. Have accounting practices in place to ensure accuracy of its financial books and records.

9.2. Ensure accurate accounting and proper reporting of information pertaining to the business and financial results in accordance with applicable Accounting Standards [Generally Accepted Accounting Principles (GAAP)].

9.3. Ensure compliance to applicable laws and regulations with respect to accounting and taxation and timely discharge of tax liability.

10. Sanction Laws

10.1 Do not engage in any dealings or transactions with any person, or in any country or territory

that are subject to global / regional sanctions as mentioned herein below in clause 10.2. BSES is vigilant of its suppliers who may be on a sanctions list or have a related company in a country subject to global/regional sanctions. In case of any concerns, the supplier should immediately report to BSES.

10.2 Do not be subject to or the target of any economic or financial sanctions or trade embargoes imposed, administered or enforced by the U.S. Government including without limitation by the World Bank or by the United Nations Security Council, the European Union, the United Kingdom including by Her Majesty's Treasury or the Department of Business, Innovation and Skills, a relevant regulatory authority or the Minister of Foreign Affairs of Canada under the Special Economic Measures Act or the United Nations Act or legislation or regulations with similar purpose or effect or any other relevant sanctions authority of any other country (collectively, 'Sanctions Laws') nor is the Company or any of its subsidiaries / affiliates located, organised or resident in a country or territory that is the subject of the target of Sanctions Laws

10.3 Do not take any action which places or is likely to place BSES in violation of Sanctions Laws and/ or breaches affecting the reputation and/ or business interests of BSES

11. Responsible Sourcing

Ensure that goods and materials are not sourced in a suspicious or illegal way and implement measures for sustainable procurement practices[3] to ensure compliance with laws and regulations.

12. Quality of Product and Services

Products and services should meet the specifications, quality, safety and environmental criteria specified in the relevant contract documents and required by applicable laws

13. Corporate Citizenship

Suppliers shall be committed to be good corporate citizens, not only in compliance with all relevant laws and regulations, but also by assisting and supporting initiatives to improve the quality of life of local communities/regions in which it operates. The activities may be, but not limited to, community health and family welfare, vocational training, education and literacy and employment.

[1] 'Forced Labour' or 'Involuntary Labour' refers to all work or service that is extracted under the menace of penalty. It also includes terms such as, bonded labour and modern slavery. It also includes any labour for which the worker receives less than the government stipulated minimum wage.

[2] 'Discrimination' refers to unjust or prejudicial treatment of people, especially on the grounds of, but not limited to, caste, creed, gender, race, ethnicity, age, colour, religion, disability, socio-economic status or sexual orientation.

[3] Sustainability shall mean to device a practice & procedure proactively to sustain resources of organisation and society at present levels with reasonable degradation. Sustainable procurement or sourcing is the process of making purchasing decisions that meet an organisation's needs for goods and services in a way that benefits not only the organisation but society, while minimising its impact on the environment. Organisation integrates the sustainability into business model as a resultant of ESG principles. This is achieved by ensuring that the working conditions of its suppliers' employees are decent, the products or services purchased are sustainable, where possible, and that socio- economic issues, such as inequality and poverty, are addressed.

GENERAL CONDITIONS OF CONTRACT (GCC)

BSES

GENERAL CONDITIONS OF CONTRACT (GCC)

The General Condition of Contract shall form a part of specifications, contract document.

1. General Instructions & Applicability

1.1. All Bids shall be prepared and submitted strictly in accordance with these instructions. The Bidder shall be solely responsible for all expenses incurred in the preparation and submission of the Bid. Under no circumstances shall the Purchaser be held liable for such costs, regardless of the outcome of the bidding process.

1.2. The Purchaser reserves the right to seek clarifications or additional information from any Bidder at any stage of the evaluation process. The Purchaser may, at its discretion, reject any Bid that is incomplete, non-responsive, or fails to meet the requirements stated in the Bid Documents. The decision of the Purchaser regarding the responsiveness or rejection of any Bid shall be final and binding, without any financial or other obligation on its part.

1.3. The Bidder shall be deemed to have carefully examined, read, and fully understood all instructions, terms, conditions, and technical requirements specified in the Tender Documents prior to submission of its Bid.

2. Definitions and Interpretations

2.1. COMPANY / OWNER / PURCHASER / BUYER / CUSTOMER shall mean BSES Rajdhani Power Limited (BRPL), a company incorporated under the Companies Act, 2013, having its registered office at BSES Bhawan, Nehru Place, Delhi – 110019. The expression shall include its authorized representatives, agents, successors, and permitted assigns.

2.2. BIDDER / SELLER / SUPPLIER / VENDOR / CONTRACTOR / AGENCY / MANUFACTURER shall mean the entity submitting a quotation or proposal in response to this bid enquiry issued by the Purchaser. The term Contractor refers to the successful Bidder(s) whose bid has been accepted by the Purchaser and on whom the Letter of Acceptance or Letter of Award is issued, and shall include the Contractor's heirs, legal representatives, successors, and permitted assigns, wherever applicable.

2.3. OFFER SHEET shall mean the Bidder's formal and firm offer submitted to BRPL in accordance with the specifications set forth in the Bid Documents.

2.4. CONTRACT PRICE/RATE shall mean the price specified in the Letter of Intent, Letter of Award, Rate Contract, or Purchase Order, as applicable.

2.5. SITE shall mean the location(s) where the Works, Goods, or Services are to be delivered, installed, commissioned, or executed, as specified elsewhere in the Tender Documents.

2.6. STORE shall mean the designated area or location where goods and materials are stored, or as otherwise defined in the Contract.

2.7. ENGINEER IN CHARGE shall mean the Company's authorized or nominated representative responsible for supervising and administering the execution of the Works under the Contract.

2.8. APPLICABLE LAW shall mean the Constitution of India and all laws, rules, regulations, directives, notifications, codes, orders, or instructions having the force of law as issued by any competent legislative or governmental authority, including but not limited to laws relating to taxes, duties, assessments, expropriation, and compulsory acquisition, as amended from time to time. Any resulting implications shall constitute a Change in Law or Change in Permits, as applicable.

2.9. OTHER CLEARANCES shall mean all consents, approvals, permits, or authorizations required to be obtained from governmental or local authorities necessary for commencing or completing the work.

2.10. DEFECT LIABILITY PERIOD shall mean the period during which the Contractor shall remain responsible for the repair or replacement of any defective part of the Works executed under the Contract, at no additional cost to the Purchaser.

2.11. TENDER SPECIFICATION shall mean the technical and commercial requirements, Indian Standard specifications, and description of works detailed in the Tender Documents, including all documents and references expressly or implicitly forming part of the Tender.

2.12. SPECIFICATIONS shall collectively mean all stipulations contained in the RFQ, Commercial Terms and Conditions, Instructions to Bidders, Technical Specifications, and any Amendments, Revisions, Deletions, or Additions issued by the Purchaser from time to time.

2.13. CODES AND STANDARDS shall mean all applicable codes and standards referred to or implied in the Specifications.

2.14. CHANGE OF WORK shall mean any addition, deletion, suspension, or modification to the scope, quality, functionality, or requirements of the Work as defined in the Contract, resulting in a corresponding change to the Technical Specifications and/or completion schedule.

2.15. GOOD INDUSTRY PRACTICE shall mean the level of skill, care, diligence, prudence, and foresight reasonably expected from a competent and experienced service provider engaged in similar activities under similar circumstances, in compliance with prevailing laws, regulations, and industry standards.

2.16. CONTRACT shall mean the agreement formed by the Letter of Award or Acceptance, Purchase Order or Work Order, Special Conditions of Contract (SCC), General Conditions of Contract (GCC), the Tender and its Annexures, and all addenda, corrigenda, and clarifications issued by the Purchaser.

2.17. EFFECTIVE DATE OF CONTRACT shall mean the date of issuance or award of the Contract, which shall also be deemed the Contract Commencement Date.

2.18. CONTRACT PERIOD shall mean the total duration agreed upon between the Contractor and Purchaser for execution of the Contract, inclusive of any extended contract period for reason beyond the control of the Contractor and/or Purchaser due to force majeure.

2.19. CONTRACT COMMENCEMENT DATE shall mean the date of issuance or award of the Contract, which shall be deemed the Effective Date of Contract.

2.20. CONTRACT COMPLETION DATE shall mean the date marking the expiry of the Guarantee or Defect Liability Period, which shall be deemed the Contract Completion Date.

2.21. ACCEPTANCE shall mean and deemed to include one or more of the following as will be stipulated in the specification:

2.21.1. Written approval by the Purchaser's Inspector authorizing dispatch of material from the Supplier's works.

2.21.2. Acceptance of material at Purchaser site stores after its receipt and due inspection/ testing and release of material acceptance note.

2.21.3. In case of supply and installation contracts, acceptance shall mean issuance of the Equipment/Material Takeover Receipt after successful installation, commissioning, and final acceptance.

3. Contract Documents Priority & Formation

3.1. The documents forming the Contract shall be read as mutually explanatory. In case of any ambiguity or discrepancy, the same shall be clarified and resolved by the Purchaser, whose interpretation shall be final. Unless otherwise provided, the order of precedence of Contract documents shall be as follows:

3.1.1. Contract Agreement/Purchase Order/Work Order
3.1.2. Letter of Acceptance / Letter of Intent / Letter of Award
3.1.3. Agreed Minutes of the Tender Negotiation Meetings
3.1.4. Agreed Minutes of the Tender Technical Meetings
3.1.5. Priced Bill of Quantities
3.1.6. Technical Specifications, Drawings, and Scope of Work
3.1.7. Tender Document including all Appendices, Addenda, and Corrigenda (latest revisions to take precedence)
3.1.8. Applicable Codes and Standards

3.2. In the event of any inconsistency, the interpretation most consistent with achieving the Project's technical, legal, and statutory objectives shall prevail. No oral communication or instruction shall supersede the written Contract documents.

4. Governing Laws & Dispute Resolution

4.1. The Contract shall be governed by and interpreted in accordance with the laws of India.

4.2. Any dispute, controversy, or claim arising out of or relating to this Contract, or the breach, termination, or invalidity thereof, shall first be sought to be resolved amicably through mutual consultation between the Parties.

4.3. In the event that an amicable resolution is not achieved within a reasonable period, the dispute shall be referred to arbitration in accordance with the provisions of the Arbitration and Conciliation Act, 1996, as amended by the Arbitration and Conciliation (Amendment) Act, 2023. The Arbitral Tribunal shall consist of three (3) arbitrators — one to be appointed by each Party, and the third, who shall act as the presiding arbitrator, to be jointly appointed by the two arbitrators so nominated.

4.4. The seat and venue of arbitration shall be New Delhi, India, and the language of proceedings shall be English. The arbitral award rendered by the Tribunal shall be final and binding upon both Parties.

5. Change in Law

5.1. Change in Law shall mean the occurrence of any of the following events after the Effective Date of the Contract:

5.1.1. The enactment or coming into force of any new Applicable Law.
5.1.2. Any amendment, modification, alteration, or repeal of an existing Applicable Law, or the issuance of any new or revised directive, regulation, or order thereunder.
5.1.3. Any change or variation in the rate, nature, or applicability of taxes, duties, levies, or charges payable in connection with this Contract.

5.2. In the event of any Change in Law, the impacted Party shall promptly notify the other Party in writing with relevant details.

5.3. If such Change in Law results in any increase or decrease in the cost, expense, or liability of the Supplier in performing its obligations under the Contract, an equitable adjustment shall be made to the Contract Price and/or the Schedule of Completion as mutually agreed between the Parties.

5.4. The Parties agree to negotiate in good faith to reasonably compensate or adjust obligations affected by such Change in Law to ensure the fair performance of the Contract.

6. Site Examination & Local Conditions

6.1. The Bidder shall be deemed to have visited and examined the site(s) of the Works and to have satisfied itself as to all existing site conditions and relevant information affecting the execution of the work.

6.2. Prior to submitting its Bid, each Bidder shall, at its own cost and expense, undertake or procure any additional investigations, explorations, tests, studies, and obtain any supplementary data relating to the physical conditions at or adjacent to the site which may influence the cost, duration, progress, or performance of the Works. The Bidder shall rely solely on such investigations and information in preparing its Bid and in fulfilling the Contract.

6.3. The Purchaser shall not entertain any claims or requests for adjustment in contract price, schedule, or any other terms arising from unforeseen or difficult site conditions, terrain, or local circumstances, once the Bid has been submitted.

6.4. The Bidder must see the site of the work, surrounding locality, local traffic rules, site approaches etc. carefully. No claim of any sort shall be entertained on account of any site conditions. If any approach from main road is required or existing approach is to be improved and maintained, for carriage of materials by the Bidder, the same shall be provided, improved and maintained by him at his own cost.

7. Language, Measurement & Precedence

7.1. The Contract issued by the Company to the Contractor, along with all related correspondence, documents, instructions, and communications, shall be prepared and maintained in the English language. In case of any translation of Contract documents, the English text shall prevail and govern in the event of any conflict or ambiguity.

7.2. All dimensions, units, quantities, and measurements shall be expressed and interpreted strictly in accordance with the Metric System (International System of Units - SI). Any deviation or alternative units must be clearly specified and mutually agreed upon in writing.

8. Scope of Work & Responsibilities

8.1. The scope of work under this Contract shall encompass turnkey execution on an end-to-end basis, including but not limited to Design, Engineering, Manufacture, Shop Testing, Inspection, Packing, Dispatch, Supply, Loading, Unloading, Storage at Site, Assembly, Erection, Complete Pre-Commissioning Checks, Testing & Commissioning at Site, Documentation, Training, Obtaining Statutory Clearances & Certifications from the Electrical Inspector, and the Final Handing Over of the Complete Projects covered under this tender to BSES Rajdhani Power Ltd. (BRPL). This shall include comprehensive Marine cum Storage cum Erection Insurance Policy (MSE), provided on a turnkey basis.

8.2. The scope includes supply of all barricading, free issued materials (including installation, transportation, loading & unloading), dewatering, watch and ward and transportation of scrap (generated at Site), balance free-issued material, dismantled material from site to BRPL store including loading & unloading and no additional charges shall be paid against these activities. Used barricading material will be taken back by bidder soon after job is handed over or as directed by BRPL Engineer-In-Charge (E-I-C). No additional cost for these items will be paid to the Bidder. Any leakage, pilferage and damage of the material shall be in vendor's scope

8.3. All works shall be performed strictly in accordance with the NIT conditions and applicable technical specifications. The Contractor shall comply rigorously with all relevant laws, codes, safety regulations, labour statutes, and environmental standards.

8.4. The detailed scope of supplies and services for the successful completion, testing, commissioning, and handover of the awarded packages shall be as set forth in the NIT. The Bidder shall quote against the Bill of Quantities listed in Volume II of this RFQ. Any materials or services not specifically mentioned in the BOQ but required for successful erection, testing, and commissioning shall be deemed included within the Bidder's scope.

8.5. Variations in quantities or additional requirements, if any, will be communicated to the successful Bidder during project execution, with site conditions potentially influencing such changes.

8.6. All related drawings, data, and instruction manuals shall be provided as required.

8.7. Digital Documentation & E-Governance: All submissions, including but not limited to drawings, Quality Assurance Plans (QAP), Factory Acceptance Test (FAT) and Site Acceptance Test (SAT) reports, invoices, test certificates, and project progress reports shall be provided digitally via the Purchaser's designated portal or email as specified.

8.8. Unforeseeable Sub-Surface Conditions: If during execution the Contractor encounters sub-surface conditions differing from those indicated by existing soil tests or its own investigations, necessitating changes in method or corrective actions, all associated costs shall be borne solely by the Contractor. No time or cost compensation shall be granted by the Purchaser for such conditions.

8.9. Construction Water and Power: The Contractor shall arrange and bear all costs for construction water and power supply, including installation, operation, and maintenance of pumps, storage tanks, and distribution systems as required on site.

8.10. Watch & Ward and Lighting: The Contractor shall be solely responsible for the provision and maintenance of lights, guards, fencing, and security arrangements, including round-the-clock security with CCTV coverage for materials stored on site. Adequate trained security personnel must be deployed at storage yards, stores, and work areas to prevent theft, pilferage, or damage. Compliance with BRPL's site safety and security regulations is mandatory.

8.11. Site Office, Facilities & Storage at Site: The Contractor shall arrange accommodation and conveyance for its staff and shall be allocated sufficient space for site stores. Storage must allow easy access for identification and inspection, comply with IS: 4082, and all incoming/outgoing materials must be recorded in a register maintained by the Contractor. The Contractor assumes full responsibility for safeguarding all materials and shall provide adequate weather protection. BRPL disclaims any liability for loss or damage. The Contractor shall maintain site cleanliness and prevent pollution; breach of this will result in removal of personnel and penalties at the discretion of the Engineer-in-Charge (EIC).

8.12. The Contract Price inclusive of insurance for loading/unloading, storage, handling, and erection during execution. No separate charges for barricading or watch & ward will be paid. No idle labour charges will be admissible in the event of any suspension of work by the Company or stoppage caused in the work due to any other reason resulting in Bidders' labour or equipment being rendered idle at any time during the duration of contract.

8.13. Identity Cards (ID Cards) shall be issued exclusively by BRPL Security ID Card Cell. Contractors must maintain records and return IDs upon employee termination. Non-compliance will attract penalties. A detailed employee deployment list must be submitted to BRPL Security before contract commencement.

8.14. Site Supervision and Advance Intimation: The Contractor shall appoint a dedicated Site In-Charge or Project Manager and support team to be present on-site throughout contract duration, as certified by the EIC. The Contractor is responsible for supervision by qualified personnel to ensure compliance with drawings, specifications, and instructions. The Contractor shall submit for approval the site organizational structure and personnel details upon receipt of the LOI or Work Order.

8.15. Written approvals from the EIC must be obtained before commencement of works, including timely submissions of plans for resource deployment, material procurement, and key activities.

8.16. Necessary Statutory Clearances from CEI of Delhi & any other authority for energizing shall be in the scope of the Bidder. Electrical Inspector Clearance fees shall be in Bidder's scope. The related fees, payments and pursuance work shall be in scope of Bidder only

8.17. Coordination with Other Agencies: The Contractor shall collaborate closely with BRPL and other appointed agencies, extending site facilities, plants, and equipment as requested without additional cost.

8.18. The Contractor shall procure necessary permissions (e.g., road cutting clearance) from road owning agencies & local authorities; statutory fees will be borne by BRPL. There will be no price escalation given to bidder even if there is delay in the project due to ROW permission

8.19. All labor, equipment, tools, scaffolding, and materials form part of the Contractor's scope. A qualified workforce and technical staff list must be submitted to the EIC promptly post-award, including relevant certifications.

8.20. The Contractor shall arrange accommodation and transport for staff at site.

8.21. Delivery of major items (GIS, PTR, Cable, etc.) must align with site progress. OEM shall perform joints and terminations; the Contractor shall provide full support.

8.22. The Contractor shall manage receipt, unloading, marking, staking, and storage of materials, ensuring insurance coverage. Copies of insurance policies must be provided to BRPL. Any damage or loss requires immediate claim lodging by the Contractor, with prompt replacement to avoid delays. For all the insurance policies taken, Contractor shall be responsible for settlement of claims with the underwriters without any liability on the purchaser and will arrange replacements/ rectification expeditiously without waiting for the settlement of insurance claim, at contractor's own cost and this shall not entitle the Contractor for any extension of Time and Cost Overrun.

8.23. Material movement (loading/unloading) and use of cranes, hydras, trailers fall under the Contractor's responsibility.

8.24. Adequate weather protection is required for materials against sun and rain.

8.25. Cable Handling: During trenchless or open digging, underground cable damage risks mandate pre-excavation use of Cable Route Tracer devices approved by BRPL; reports must be submitted for clearance. Failure to comply shall result in heavy penalties for cable damage.

8.26. Cable laying works require follow-up sheath voltage tests, availability of appropriate tools/testing equipment, and submission of cable laying schedules for quality checks.

8.27. Statutory Compliance and Certification: Obtaining Electrical Inspection Clearance (EIC) certification from BSES Electrical Inspector (up to 33kV) and other statutory authorities (above 33kV) for substation commissioning is the sole responsibility of the Contractor.

8.28. Any other material not specifically mentioned above but required for successful commissioning and operation is in the scope of bidder. Prior approval shall be taken from central engineering department before execution. Commercial approval shall be taken from C&M Department before execution.

8.29. For Package A, Contractor shall operate the complete package awarded for a period of 6 months post handing over of the site to purchaser. Contractor shall depute necessary trained manpower for O&M of the project as per the requirement as specified in the technical specification.

8.30. Commissioning Spares shall be deemed to be included in the quoted prices

9. Specifications, Codes & Standards

9.1. The Bidder shall follow all codes and standards referred in the Contract Document. Codes and standards not specifically mentioned in the Contract Document may be followed by the Bidder with the prior written approval of BRPL, provided materials, supplies and equipment according to the standard are equal to or better than the corresponding standards specified in the Contract.

9.2. Product manufacturer or brand names cited in the Contract Documents serve solely to define the required type and quality of products. The Bidder shall not substitute or alter the specified brands or product qualities without the express prior written consent of BRPL. All products and equipment must be used or installed in full compliance with the original manufacturer's guidelines unless otherwise instructed by BRPL.

9.3. In all cases, the Bidder must comply with relevant codes, standards, and requirements prescribed by any applicable government agencies.

9.4. In the absence of specific BSES standards, the Bidder shall follow the relevant Indian Standards (IS) or International Electrotechnical Commission (IEC) standards as applicable.

10. Representations and Warranties

10.1. The Contractor represents and warrants that it possesses full legal capacity, valid licenses, permits, and approvals required to perform all obligations under this Contract.

10.2. The Contractor warrants that all Goods supplied under this Contract:

10.2.1. Are brand new and free from any defects in design, materials, and workmanship

10.2.2. Fully conform to the Contract specifications and requirements

10.2.3. Are suitable and fit for the intended purpose as specified in the Contract documents

10.3. The Contractor further warrants that all Services performed shall be executed with the highest degree of skill, care, and diligence consistent with Good Industry Practice and prevailing professional standards.

11. Ethics, Integrity & Code of Conduct

11.1. The Contractor shall fully comply with all anti-bribery, anti-corruption, conflict of interest, gifts and gratuities, and integrity policies issued or communicated by the Purchaser. For Contracts exceeding specified thresholds, the Contractor shall be required to execute an Integrity Pact as per the Purchaser's guidelines.

11.2. Any breach of these ethics and integrity obligations by the Contractor may lead to disciplinary actions including, but not limited to, termination of the Contract, forfeiture of performance security deposits, recovery of losses incurred by the Purchaser, debarment from future procurement opportunities, and reporting to relevant regulatory or enforcement authorities.

12. Sustainability, ESG & Legal Compliance

12.1. The Contractor shall implement an Environmental, Social, and Governance (ESG) program appropriate to the scope of work, which shall include but is not limited to:

12.1.1. Compliance with applicable Extended Producer Responsibility (EPR), electronic waste, hazardous waste, plastic waste, and battery waste management regulations;

12.1.2. Adherence to RoHS/REACH standards where applicable;

12.1.3. Design and supply of energy-efficient products meeting prescribed star ratings or efficiency classes;

12.1.4. Take-back and responsible disposal or recycling of packaging and end-of-life equipment where mandated;

12.1.5. Occupational health and safety management systems aligned with IS/ISO 45001;

12.1.6. Social safeguards including prohibition of child labour, forced labour, assurance of fair wages, and provision of safe and dignified workplaces.

12.1.7. Adoption of environmentally responsible practices such as waste minimization, recycling, and strict prohibition of hazardous materials usage, in accordance with relevant laws and regulations.

12.2. The Contractor shall support the Purchaser's Scope-3 greenhouse gas emissions tracking efforts by submitting quarterly reports detailing the embodied carbon content of supplied goods (where available) and associated logistics emissions. The Contractor shall provide reasonable assistance in this regard at no additional cost.

12.3. The Contractor shall prioritize the use of recycled or returnable packaging materials and minimize single-use plastics except where necessary for product protection. All wooden packaging shall be sourced from legally compliant suppliers. Pallets, drums, and similar packaging materials shall be collected and returned for reuse or recycling where feasible.

12.4. The Contractor shall maintain accurate records, documentation, and evidence of compliance with all ESG requirements and shall provide such information to BRPL or relevant authorities as reasonably requested, in the format and frequency specified.

13. Data & Cybersecurity

13.1. For any scope involving software, firmware, or networking components, the Contractor shall:

13.1.1. Provide comprehensive cyber hardening guidelines;

13.1.2. Maintain a vulnerability disclosure window of thirty-six (36) months following delivery;

13.1.3. Deliver timely security patches and firmware updates as they become available;

13.1.4. Supply a software bill of materials (SBOM) listing all software components included;

13.1.5. Ensure no hard-coded credentials exist in delivered software or devices.

13.1.6. Any connection to the Purchaser's network must be authorized in writing prior to implementation.

13.2. The Contractor shall handle any personal data processed in relation to this Contract in full compliance with applicable data protection laws. Appropriate technical and organizational security measures must be implemented, and the Contractor must promptly notify the Purchaser of any data breaches or security incidents impacting Purchaser data.

14. Local Content and Eligibility

14.1. The Contractor shall comply fully with the Public Procurement (Preference to Make in India) Order and related norms. This includes submitting accurate declarations of local content in goods and services, and consenting to verification and audits by the Purchaser or authorized agencies. Any false or misleading declarations shall entitle the Purchaser to disqualify the Contractor, terminate the Contract, and impose debarment as per applicable regulations.

14.2. Bidders originating from countries sharing land borders with India must adhere to the registration and eligibility criteria specified by the Government of India. Failure to comply with these requirements will render the bid ineligible for consideration and may lead to Contract termination if discovered post-award.

15. Manufacturing Approvals & Clearances

15.1. Transmittal approval documents - including Guaranteed Technical Parameters (GTP), drawings, Quality Assurance Plans (QAP), and other relevant documents - shall be submitted as per the approved project schedule to the designated BRPL official for review and approval. BRPL shall provide approval or comments within seven (7) calendar days of the initial submission. Should resubmission be required, the Contractor shall complete it within five (5) calendar days. Subsequent approvals or comments from BRPL on such resubmissions will be issued within five (5) calendar days. Repeated resubmissions are discouraged and may impact timelines.

15.2. Manufacturing activities shall commence only after the Contractor receives formal transmittal approval and manufacturing clearance from BRPL.

15.3. All documents submitted for transmittal approval must reflect pre-award discussions and confirmations between BRPL and the Contractor to ensure accuracy and compliance.

15.4. Delays in obtaining transmittal approval shall not be accepted as valid grounds for extension of delivery timelines or waiver of liquidated damages.

15.5. The Contractor shall submit the complete Quality Assurance Plan (QAP) or Factory Quality Plan (FQP) covering the entire scope within four (4) weeks of issuing the Letter of Acceptance (LOA) or Purchase Order for Employer/Owner approval. All works shall be conducted strictly in accordance with the approved QAP.

16. Errors, Omissions & Discrepancies

16.1. The Contractor shall be solely responsible for all discrepancies, errors, and omissions found in the drawings, documents, or any other information submitted by it, regardless of whether such submissions have been approved, reviewed, or accepted by BRPL. Notwithstanding the foregoing, any design or drawing errors directly resulting from inaccurate or incomplete data or written instructions furnished by BRPL shall not be attributed to the Contractor.

17. Quantity Variations, Extra Items/Works

17.1. The Contractor shall execute and complete the Work fully in accordance with the Contract and under the directions and satisfaction of the Engineer-in-Charge (EIC).

17.2. The EIC may issue, at their discretion, further drawings, written instructions, details, directions, and explanations (hereinafter referred to as "EIC's Instructions"), relating to:

- 17.2.1. Variation or modification in design, quality, specifications, quantity; omission or substitution of any work.
- 17.2.2. Timing or sequencing of work.
- 17.2.3. Discrepancies between drawings, Bill of Quantities, and/or specifications.
- 17.2.4. Removal and substitution of any materials, equipment, or resources brought to site by the Contractor.
- 17.2.5. Execution of additional work deemed necessary for completion.
- 17.2.6. Removal and/or re-execution of any work executed.
- 17.2.7. Substitution of any personnel employed on site.
- 17.2.8. Rectification of defects under the "Defects Liability" clause.
- 17.2.9. Opening for inspection of any covered work.
- 17.2.10. Changes in lines, levels, positions, or dimensions of any part of the Work.

17.3. The Contractor shall comply promptly with all EIC's Instructions. Verbal instructions involving variations must be confirmed in writing by the Contractor within seven (7) days and approved in writing by the EIC.

17.4. If the EIC's Instructions require work beyond the Contract scope and are not due to Contractor's breach, the EIC shall compensate the Contractor for such work as extra, valued as provided herein.

17.5. Variations shall not invalidate or vitiate the Contract. The value of all variations shall be considered in the final certification.

17.6. No variation shall be undertaken without written instructions from the EIC, except for quantity variations resulting naturally from site conditions. Verbal instructions must be confirmed in writing by the EIC within thirty (30) days of Contractor's written confirmation.

17.7. Extra or additional work instructed by the EIC shall be valued at Contract rates. Absent applicable rates, pricing shall be agreed based on:
- 17.7.1. Quoted rates for similar tender items.
- 17.7.2. If unavailable, calculation based on:
  - 17.7.2.1. Direct labour costs plus indirect charges, based on related BIS codes and standard consumption factors or as accepted by EIC.
  - 17.7.2.2. Material cost inclusive of taxes, duties, and delivery to site with invoice proof.
  - 17.7.2.3. Plant and equipment hire and operational charges per standard norms or as accepted by EIC.
  - 17.7.2.4. Overheads and profit payable to Contractor.

17.8. If work is incomplete or non-compliant with specifications, the EIC may approve payment at reduced rates considered reasonable.

17.9. Contractor shall submit detailed rate analyses and supporting documents when requested. EIC's valuation of claims shall be final and binding.

17.10. Quantities listed in the Bill of Quantities (BOQ) are estimates and subject to re-measurement. Contractor shall not claim loss of profit or damages due to quantity differences or omission of work.

17.11. Rates in the BOQ shall remain firm regardless of variations in quantities or total Contract sum.

18. Free Issue Materials/Equipments

18.1. Materials and equipment provided as Free Issue by the Purchaser to the Bidder for fulfilling obligations under this Agreement shall remain the exclusive property of the Purchaser. The Bidder shall clearly label and identify such Free Issue Items as the Purchaser's property until the completed Goods are delivered in accordance with the Agreement terms.

18.2. Risk of loss or damage to all Free Issue Items shall transfer to the Bidder upon receipt and shall remain with the Bidder until the completed Goods are delivered to the Purchaser as per the Agreement.

18.3. The Bidder shall take all necessary measures to preserve and maintain the Free Issue Items in good condition and shall utilize them solely for the purposes stated in the Agreement.

18.4. Disposal or management of any surplus Free Issue Items shall strictly follow written instructions provided by the Purchaser.

18.5. The Bidder shall execute and submit an Indemnity Bond, in a format approved by the Purchaser, covering the custody, use, and return of Free Issue Items.

19. Quality Assurance, Inspection, Testing and Test Certificates

19.1. The Contractor shall procure all equipment solely from authentic sources approved by the Company and as per Company specifications.

19.2. The Contractor shall prepare a detailed Quality Assurance Plan (QAP) and test procedures identifying all manufacturing stages, associated quality checks, raw material inspections, and Customer hold points. This document shall include inspection methods, acceptance criteria, and standards. The Contractor must obtain Purchaser approval prior to manufacturing commencement. The Purchaser retains the right to review Contractor's in-house inspection reports and quality checks at stages other than Customer hold points and may issue remarks requiring additional testing, rectification, or rejection, which the Contractor shall comply with.

19.3. Witness and Hold points represent critical inspections or tests during manufacturing where the Contractor must notify the Purchaser in advance to enable witnessing. Final inspection is a mandatory hold point. Work shall proceed beyond any hold point only after explicit clearance by the Purchaser or receipt of a witness waiver letter.

19.4. The Purchaser's waiver of any quality assurance activity at any stage shall not exempt the Contractor from fulfilling all Contract requirements, codes, and referenced standards, nor preclude the Purchaser from subsequently rejecting non-conforming materials or work.

19.5. The contractor shall submit all test certificates and joint inspection reports related to equipment's/materials, wherever applicable.

19.6. Manufacture items shall not be dispatched without prior receipt of a Material Dispatch Clearance Certificate (MDCC) or explicit instructions from the Purchaser.

19.7. All in-house testing and inspections shall be conducted at no additional cost. Such inspections shall be overseen by the Purchaser or its authorized third-party inspection agency. Costs of futile or abortive inspection visits shall be deducted from Contractor invoices. The Bidder shall provide at no additional cost to the Company such assistance, instruments, machines, labour and materials as are normally required for examining, measuring and testing any work and the quality, weight or quantity of any material used and shall supply samples of materials before incorporation in the works for testing as may be selected and required by the EIC.

19.8. Cement shall be of grade 43 ordinary port land cement conforming to IS 8112/53 grade O.P.C. conforming to IS 12269, aggregate for cement concrete shall confirm to IS 383, reinforcement for cold twisted bars shall confirm to IS 1786, the bricks for brick work shall correspond to IS 1077, Structural steel shall confirm to relevant IS code, water to be used shall comply with requirement of IS 456. Bidder shall provide all requisite facilities for field tests and laboratory tests shall be carried out in the laboratory having ISO 9001-2000 Certified Testing Lab for which no extra payment shall be made. The Bidder shall maintain mandatory Test Register with Engineer-in-Charge as provided in latest Indian Standard Specifications

19.9. All samples shall be supplied to Company if required by the Bidder at his own cost. The Bidder shall take approval of the EIC prior to start the work for all samples of materials including mix design of concrete to be utilized for the works to be executed. The mix design of concrete, testing of reinforcement steel and structural steel shall be carried out by an external agency approved by the Company. The cost of all such tests carried out by the external agencies or consultants shall be borne by the Bidder at his own cost and are deemed to be included in the unit rates quoted in the BOQ. The Bidder can also have concrete cubes tested in an approved laboratory in lieu of a testing machine at site but at his own cost and with the prior written consent of the Company. The Engineer-in-Charge/QC department or any person

authorized by them shall at all times have access to the works and to all workshops and places where work is being prepared or from where materials, manufactured articles or machinery are being obtained for the works and the Bidder shall afford every facility for and every assistance in or in obtaining the right to such access.

19.10. No work shall be covered up or put out of view without the approval of the EIC or his representative and the Bidder shall afford full opportunity to the EIC or his representative to examine and measure any work which is about to be covered up or put out of view and to examine foundations before permanent work is placed thereon. The Bidder shall give due notice to the EIC or his representative whenever any such work or foundations is or are ready or about to be ready for examination and the EIC or his representative shall, without unreasonable delay, unless he considers it unnecessary, attend for the purpose of the examining such foundations.

19.11. The Purchaser reserves the right to send any supplied material to recognized laboratories for testing at any time, with testing costs borne by the Contractor. If materials fail to meet the specified technical requirements, the Contractor shall bear all associated charges and penalties. To prevent dispute, the Contractor should appoint a representative to witness material sealing at the storage site before dispatch for testing.

20. Inspection & Test Charges

20.1. The Goods shall be subjected to inspection by the Purchaser and/or a third-party inspection agency appointed by the Purchaser. Such inspections shall include stage-wise and final inspections as per the mutually agreed Quality Assurance/Quality Control (QA/QC) procedures. Additionally, inspections may be conducted at the Purchaser's site or storage facilities. The Contractor shall repair or replace any damaged or rejected Goods to the satisfaction of the Purchaser at no additional cost.

20.2. Inspection charges are included in the total contract value, whereas third-party inspection fees shall be borne by the Purchaser. However, any costs arising from futile or abortive visits by the Purchaser's inspectors to the Contractor's premises shall be deducted from the Contractor's invoices.

20.3. No shipment of Goods, whether in whole or in part, shall be made under this Purchase Order until the Contractor has received a written Release for Shipment Notice from the Purchaser or its authorized representative.

20.4. Requests for stage-wise or pre-dispatch inspections must be submitted to the Purchaser at least seven (7) days in advance, utilizing the official request format provided by BRPL.

21. Documentation

21.1. The Contractor shall procure all materials and equipment exclusively from BRPL-approved sources, strictly adhering to BRPL specifications and Transmittal Approvals. The Contractor shall submit copies of all relevant Material and Type Test Certificates, Operation and Maintenance (O&M) Manuals, as well as Approved and As-built drawings for the supplied equipment. Compliance with BRPL's specifications and Field Quality Procedures is mandatory and must be ensured by the Contractor throughout the project.

22. Packing, Handling, and Storage

22.1. Packing: The Contractor shall pack, or cause to be packed, all Commodities in suitable crates, boxes, drums, containers, cartons, or other appropriate packaging to ensure safe shipment by road or rail to BRPL's Delhi/New Delhi stores or site. Packaging shall provide adequate

protection to prevent damage during transit. Wherever feasible, biodegradable packaging materials should be used in compliance with prescribed environmental standards.

22.2. Packing List: Each package shall contain a detailed packing list itemizing the contents with exact weight, external dimensions (length, width, and height), Item SAP Code, Purchase Order number, and date. One copy of the packing list must be enclosed inside each package delivered.

22.3. Prior to commencement of supply, the Contractor shall provide the Material Safety Data Sheet (MSDS) and detailed handling and storage instructions or manuals, where applicable. A copy of these documents shall be submitted and maintained at the storage or site location along with the first lot of materials delivered.

23. Delivery Terms & Address

23.1. The Goods shall be delivered to BRPL's designated Store(s) and/or Site(s). All shipments shall be made on a Free on Road (FOR) destination basis, inclusive of any applicable local taxes and duties.

23.2. The Contractor shall be responsible for unloading of the Goods at the respective BRPL Store(s) or Site(s).

23.3. Where applicable, the Contractor shall ensure issuance of all required transit documents, including E Way Bills, necessary for lawful transportation of the Goods. The logistics partner or transporter shall not be held liable for any loss, penalties, or confiscation arising due to improper documentation or mis-declaration.

24. Transportation

24.1. The Contractor shall be responsible for arranging the transportation of Goods from the Contractor's or Sub-Contractor's works or warehouses to the Buyer's designated Store(s) or Site(s).

24.2. All charges related to transportation from the Contractor's works to the Buyer's Store(s) or Site(s) are deemed included in the total order value and shall not be billed separately.

25. Transit Insurance

25.1. The Contractor shall be responsible for arranging Transit Insurance for all materials and Goods.

25.2. In the event of damage or loss of cargo during transit, the Contractor shall coordinate directly with the relevant insurance company to procure insurance coverage, lodge claims, and facilitate settlement. Regardless of the insurance outcome, the Contractor must replace and deliver the damaged or lost Goods to the Purchaser within thirty (30) days of the incident, at the Contractor's sole expense, including all associated costs for replacement and delivery.

26. Acceptance & Rejection of Goods

26.1. Goods shall be accepted only upon receipt of the Material Dispatch Clearance Certificate (MDCC).

26.2. The Purchaser shall not accept materials if LR/ RR / Bilty and the Original Tax Invoice (Transporter Copy) are not handed over at store/site. The Contractor shall draw all dispatch documents in favour of Purchaser as Consigned to and billed to.

26.3. The materials shall be supplied during working hours from 10AM to 5PM. No delivery shall be effected after this time unless prior intimation is given to the Purchaser.

26.4. The Contractor shall take signature of the authorized person at store/site with Purchaser's seal duly receipting the materials and the quantities in the absence of which payment shall not be made by the Purchaser.

26.5. The Contractor shall ensure exact quantities are supplied as per MDCC and if the quantities are short-supplied, as per verification at the Contractor's store/site, the same shall be adjusted and net payment shall be made accordingly.

26.6. The Purchaser retains the exclusive right to reject any goods that do not comply strictly with the terms and conditions of this Purchase Order.

27. Price Validity

27.1. For Contractors awarded the contract, the agreed prices shall remain fixed and valid throughout the entire duration of the contract until its completion.

28. Prices/Rates/Taxes

28.1. Price basis for supply of materials & services:

28.1.1. The contract price/rates finalized for this contract shall be firm for the entire duration of the contract and are not subject to any variation and escalation for any reason whatsoever.

28.1.2. The supply prices are inclusive of packing, forwarding, and loading at manufacturer's premises, payment of GST, Freight, and any other local charges. Octroi is presently not applicable in Delhi and however if applicable shall be reimbursed at actuals.

28.1.3. The supply prices shall also include unloading at BRPL Delhi/New Delhi stores/sites.

28.1.4. Transit insurance shall be arranged by the Contractor at no additional cost to the Purchaser.

28.1.5. GST is included in the total contract price. GST payments will be processed only upon submission of the Contractor's valid GST registration and a self-declaration on the Contractor's letterhead confirming GST compliance and deposit as per applicable laws. The Contractor must provide their GST registration number.

28.1.6. Income Tax (IT) at applicable rates will be deducted from Contractor invoices as Tax Deduction at Source (TDS).

29. Taxes & Duties

29.1. All taxes, duties, turnover tax, labour cess, etc. (except GST) levied by State or Central Governments or local bodies shall be borne by the Contractor. Any new taxes and duties levied by the government during the term of this Agreement shall be borne by BRPL. Income tax and TDS will be deducted at source from the Contractor's invoices as applicable. The Contractor must furnish their GST registration number.

29.2. GST on actuals will be paid upon submission of GST registration and a self-declaration on the Contractor's letterhead confirming that the tax has been or will be deposited as per applicable tax laws.

29.3. As per Notification No. 39/2021 # Central Tax dated 21st December 2021, effective from 01/01/2022, a registered person (i.e., Recipient/Purchaser) can claim input tax credit only for invoices reflected in GSTR2A or GSTR2B (which requires 100% matching of invoices). Suppliers must deposit GST by filing GSTR-1 and GSTR-3B.

29.4. If the Supplier/Contractor fails to comply and the Recipient/Purchaser cannot avail input tax credit due to non-filing or non-compliance of GSTR-1 and GSTR-3B for the month/quarter of

supply, the Recipient/Purchaser reserves the right to withhold 100% of the GST amount from subsequent payments until the default is rectified.

29.5. To release withheld payments under the GST Act, the Supplier/Contractor must submit proof of payment via GST Portal screenshots reflecting the Recipient/Purchaser's name, along with the relevant GSTR-1 and GSTR-3B filings for the applicable period. Payments will not be released until such proof is provided.

29.6. Furthermore, the Recipient/Purchaser reserves the right to recover any financial loss incurred (including tax, interest, penalties, and loss of input credit) due to the Supplier/Contractor's non-compliance or non-filing of GSTR-1 and GSTR-3B.

29.7. For goods delivered on FOR site basis, the Supplier/Contractor is responsible for complying with all rules regarding the issuance of E-way bills. Any violation may result in penalties and seizure of goods during transit. All penalties and pre-deposits related to such violations shall be borne by the Supplier/Contractor. The Supplier/Contractor is also responsible for ensuring timely release of seized goods. Any supply delay caused by seizure shall attract liquidated damages as per contract provisions.

29.8. For goods not covered under GST, applicable Excise Duty (ED), VAT, or CST shall be payable extra at prevailing rates.

29.9. BRPL Tax Details:
29.9.1. GSTIN: 07AAGCS3187H2Z3
29.9.2. PAN No.: AAGCS3187H

29.10. The Seller must submit a detailed statement of invoices and amounts to the concerned officer within seven (7) days after the end of each month corresponding to the supply period. Failure to submit shall be taken as no requirement for reconciliation.

30. Variation in Taxes, Duties & Levies

30.1. The total order value shall be adjusted for any variations in statutory levies imposed by competent authorities through fresh notifications issued within the stipulated delivery period. In the event of any reduction in taxes, duties, or levies, such benefits shall be passed on to the Buyer.

30.2. No other taxes, duties, or levies beyond those specified above shall be payable by the Buyer, except for new levies, taxes, or duties imposed by competent authorities via fresh notifications after the issuance of the purchase order but within the stipulated delivery period.

30.3. Any changes in taxes, duties, or levies shall only apply to the portion of the purchase order remaining unexecuted on the date of such notification. Changes occurring after the scheduled delivery date shall not affect the terms or value of the purchase order.

30.4. The purchase order value shall remain unaffected by any variations in exchange rates.

31. Taxes & Duties on Raw Materials and Bought-Out Components

31.1. Taxes and duties applicable to raw materials and bought-out components shall be included within the total order value and shall not be subject to any escalation or variation for any reason throughout the duration of the contract.

32. Building and Other Construction Workers (BOCW) Act (Applicable for All Civil and Construction Works)

32.1. The Building and Other Construction Workers (BOCW) Act applies to any establishment employing or having employed ten or more building workers at any time during the preceding twelve months in any building or construction work. The Contractor performing such construction work must register with the Registering Officer under Section 7 of the BOCW Act, along with applicable state government rules, and submit the Registration Certificate issued by the Registering Officer of the concerned State Government's Labour Department.

32.2. Under this Act, the Contractor shall pay a cess at the rate of 1% on the cost of construction work, which shall be deducted from each interim bill. The cost of materials, when billed separately as a distinct schedule item, shall be excluded from the cess calculation. The Contractor is required to comply with all applicable provisions of the BOCW Act.

33. Tax Indemnity Clause

33.1. The Contractor (including its affiliates in India or overseas, agents, third-party contractors, or any other persons appointed by such affiliates for this Agreement) shall bear sole responsibility for compliance with and payment of all taxes—direct or indirect—including but not limited to income tax, transfer pricing, value added tax, SGST, CGST, IGST, UTGST, GST Compensation Cess, customs duty, excise duty, Research and Development Cess, cesses, interest, penalties, or any other tax/duty/amount/charge/liability arising under laws or regulations applicable in India or overseas, or from demands or recoveries initiated by any revenue authority.

33.2. If any tax liability (including but not limited to income tax, transfer pricing, value added tax, SGST, CGST, IGST, UTGST, GST Compensation Cess, customs duty, excise duty, Research and Development Cess, etc.), cesses, interest, penalties, or other charges become payable by the Purchaser due to the Contractor's or its affiliates' failure to comply with relevant laws or regulations, the Contractor undertakes to indemnify the Purchaser for such amounts.

33.3. Furthermore, the Contractor agrees to indemnify and keep indemnified the Purchaser against all actions, proceedings, claims, losses, damages, costs, and expenses directly or indirectly arising from any failure by the Contractor or its affiliates to comply with applicable legal obligations.

33.4. The parties agree to the following procedure in the event the Purchaser receives any demand or notice relating to non-compliance by the Contractor or its affiliates with tax laws:

33.4.1. The Purchaser shall notify the Contractor in writing within five (5) common working days of receipt of such communication, or as soon as reasonably possible if the response time is shorter.

33.4.2. Upon receipt of notification, the Contractor shall either accept the demand and reimburse the Purchaser within five (5) working days of payment or propose disputing the demand.

33.4.3. If the Contractor opts to dispute the demand and the Purchaser agrees, the Purchaser will contest the demand following due legal process, refraining from paying the tax demand during litigation. The Contractor shall reimburse all litigation costs incurred, including counsel fees and filing charges. Should any coercive recovery measures be initiated, the Purchaser may pay the sum and recover it from the Contractor within five (5) working days.

33.4.4. If the demand is finally determined by a tribunal or authority and payment was made by the Purchaser, the Contractor shall reimburse the amount within ten (10) days of payment. Conversely, if no amount is payable and a refund arises, the Purchaser shall pass the refund to the Contractor within ten (10) days of receipt.

34. Invoicing Instructions

34.1. Invoices shall be prepared in triplicate — (1) Original for the recipient, (2) Duplicate for the transporter, and (3) Triplicate for the supplier — and delivered to: BSES RAJDHANI POWER LIMITED, BSES BHAWAN, NEHRU PLACE, NEW DELHI - 110019. Material Dispatch Clearance Certificates (MDCC) will be issued separately for Capex and Opex, and suppliers must submit invoices accordingly.

34.2. The Contractor shall obtain GST registration in the state from which the supply is made. Suppliers must possess a valid GST registration number and issue GST tax invoices and supporting documents compliant with the SGST Act, CGST Act, IGST Act, UTGST Act, GST Compensation Cess Act and applicable rules. Failure to submit GST-compliant invoices shall render the tax amounts (SGST, CGST, IGST, UTGST, GST Compensation Cess) subject to withholding during payment.

34.3. Invoices must be issued in the name of BSES RAJDHANI POWER LIMITED, with the store/site address as specified in the MDCC. Invoices should comply with all GST Invoice, Debit Note, and Credit Note requirements, including supplier details, GSTIN, HSN codes, item details, tax rates, etc., as outlined in government regulations and the GST INV-01 invoice template.

34.4. The Contractor must charge appropriate CGST, SGST, UGST, IGST, and GST Compensation Cess as applicable.

34.5. Timely Issuance of Invoices/Debit/Credit Notes:

34.5.1. Contractors shall provide invoices and debit/credit notes promptly to allow the Purchaser to claim input tax credit within prescribed deadlines per GST laws. Adjustments (credit notes, purchase returns, debit notes) must be processed within legally mandated timeframes.

34.5.2. In case of advance payments, the Contractor agrees to raise a tax invoice. Upon receipt of advance, the Purchaser will issue a payment voucher as per applicable GST rules. Four copies of invoices are required, including the Electronic Reference Number if mandated by law. Persons in charge of conveyance must carry required documents and devices.

34.6. Transit Documents and E Way Bills: Where applicable, the Contractor is responsible for issuing transit documents/E Way Bills for goods movement. Logistic partners or transporters shall not be liable for losses or confiscation due to improper documentation or misdeclaration. The Supplier must comply with all E-way bill regulations. Violations may attract penalties and seizure of goods. The Supplier shall bear all penalties and pre-deposits and is responsible for obtaining release of goods from authorities like CGST/SGST. Delays due to seizure shall attract liquidated damages as per contract.

34.7. All Contractors/Service Providers must include the following minimum details in invoices submitted:

34.7.1. Invoice/Credit Note number and date
34.7.2. Contractor/service provider address and GSTN
34.7.3. Customer name and address as per GST registration and GST registration number
34.7.4. 'Shipped to' and 'Billed to' addresses
34.7.5. Place of supply
34.7.6. Description of goods/services with units of measurement
34.7.7. HSN/SAC codes
34.7.8. Taxable value (gross and discount detailed separately if applicable)
34.7.9. Tax rate and amount for CGST, SGST, and IGST separately
34.7.10. Contractor's signature (for e-invoices, a physical signature is not required)
34.7.11. Indication of reverse charge applicability

35. Bill Submission Procedure

35.1. All monitoring, measurement, billing & payment processes shall be on IT enabled platform of BRPL as per Company's guidelines issued from time to time and bidders to ensure adherence. The company may modify the procedure for the submission of bills. The Contractor shall be obliged to submit its bill as per the procedure stipulated by the company from time to time.

35.2. All bills must be uploaded to BRPL portal (BTS - Bill Tracking System) for certification by the Engineer In-Charge or Package Engineer.

35.3. Further the contractor shall also submit original bill (hard copy) along with supporting documents at Vendor Support Cell of BRPL. The bills shall be made in favour of BSES Rajdhani Power Ltd, BSES Bhawan, Nehru Place, New Delhi - 110019.

35.4. Each bill shall be complete in all respects, including compliance with ESI, HR, Quality, HSE, Stores, and Finance requirements. The site follows an established procedure for bill processing. Incomplete bills or invoices will not be processed for payment.

36. Power to Withhold Payment

36.1. The Employer reserves the right to withhold payment of Running Account (RA) bills, in whole or in part, for reasons including but not limited to non-compliance with major contract terms such as quality and progress of work, at the sole discretion of the Engineer In-Charge.

36.2. Such withholding of payment does not absolve the Contractor from the obligation to execute work diligently and promptly, nor does it entitle the Contractor to claim interest, anticipated profits, or losses on the withheld amounts.

36.3. All pending compliances must be fulfilled by the Contractor before submission of the next RA bill for the withheld amount to be released. If compliances are not completed before the next RA bill, the hold amount will be released once the Contractor meets the Employer's satisfaction.

36.4. If work is not performed strictly in accordance with the contract, or if any claim (just or unjust, including claims for wrongful death or property injury) arises against the Employer related to the Contractor's work, the Employer shall have the right to withhold payments, final or otherwise, to an extent deemed adequate to secure against delays, losses, or claims.

36.5. In cases where the Employer chooses not to require correction of defective or non-conforming work, an equitable deduction from the contract price shall be mutually agreed upon between the Contractor and Employer. Failing agreement, the deduction shall be determined through the dispute resolution process. Pending such resolution, the Employer may withhold a reasonable sum from payments due to the Contractor.

37. Terms of Payment and Milestones

37.1. Payments will be issued upon the achievement of each specified milestone, as outlined below:

37.2. **PACKAGE A:**

37.2.1. **FOR SUPPLY OF EQUIPMENT AND MATERIALS:**

i. 5% of the total supply contract price shall be paid as initial interest-free advance upon fulfilment of:
   a) Acceptance of LOI/PO,
   b) Submission of Bank Guarantee (BG) of equivalent amount valid up to completion period/handing over, whichever is earlier plus 3 months claim period, and
   c) Submission of Contract Performance Bank Guarantee (CPBG) of 10% of the contract price valid up to completion period/handing over, whichever is earlier

plus 3 months claim period. In case of delay, the BG shall be extended suitably. The advance shall be adjusted against R/Bills.

ii. 5% of the total supply contract price shall be paid as interest-free advance against submission of BG of equivalent amount valid up to completion period/handing over, whichever is earlier plus 3 months claim period, approval of drawings under Category-1 of major equipment (shall be mutually agreed at the time of award), Quality Plans, Pert Chart, Network Diagram, Field Quality Plan, posting of Project Manager and commencement of the first milestone of the work mutually agreed. In case of delay, the BG shall be extended suitably. The advance shall be adjusted against R/Bills.

iii. 60% prorata of supply value item-wise shall be payable against R/A bills for supply of equipments and materials within 30 days against receipt & acceptance of material at site and submission of following documents duly certified by BRPL Project-in-charge, complete in all respects:
   a) Signed copy of accepted Purchase Order (for first payment)
   b) LR / RR / BL as applicable
   c) Challan as applicable
   d) One (01) copy of Contractor's detailed Recipient Invoice showing Commodity description, quantity, unit price, total price and basis of delivery, and being 100% of the value of the consignment claimed.
   e) One (01) copy of Contractor's transporter invoice duly receipted by BRPL Stores & Original certificate issued by BRPL confirming receipt of the subject material at Stores/Site and acceptance of the same as per the provisions of the contract.
   f) One (01) copy Packing List / Detailed Packing List
   g) Approved Test certificates / Quality certificates, if applicable
   h) Certificate of Origin, if applicable
   i) Material Dispatch Clearance Certificate (MDCC)
   j) Insurance Policy / Certificate, if applicable
   k) Warranty / Guarantee Certificate, if applicable
   l) Checklist for bill submission

iv. 20% prorata on account of supply value of the actual executed value after installation/erection of material duly certified by BRPL Project-in-Charge.

v. Balance 10% on account of supply value of the actual executed value shall be paid in 30 days after completion of successful acceptance testing, commissioning and handing over of complete systems duly certified by BRPL Engineer-in-Charge specified in the tender and on submission of performance Bank Guarantee of 10% amount, in our format valid up to a defect liability period from the date of handing over of the scheme including submission of Electrical Inspector Clearance Certificate, Compliance of final punch point, No Demand Certificate, Letter of Indemnity by the Contractor (The format of No Demand Certificate and Letter of Indemnity are attached as Annexure) and after reconciliation & adjustments of payments, if any towards quantities of materials issued from purchaser's stock and consumed by the contractor for expeditious completion of the job.

37.2.2. **FOR ERECTION, INSTALLATION AND TESTING & COMMISSIONING/CIVIL:**

i. 10% of the total services contract price shall be paid as initial interest-free advance upon fulfilment of:
   a) Acceptance of LOI/PO,
   b) Submission of Bank Guarantee (BG) of equivalent amount valid up to completion period/handing over, whichever is earlier plus 3 months claim period, and
   c) Submission of Contract Performance Bank Guarantee (CPBG) of 10% of the contract price valid up to completion period/handing over, whichever is earlier

plus 3 months claim period. In case of delay, the BG shall be extended suitably. The advance shall be adjusted against R/Bills.

ii. 60% prorata of total services value shall be payable against R/A bills payable within 30 days after completion duly certified by Engineer in charge.

iii. 20% prorata of total services value shall be payable against R/A bills payable within 30 days after completion of successful acceptance testing, commissioning and handing over of complete systems duly certified by BRPL Engineer-in-Charge specified in the tender.

iv. Balance 10% on account of total services value of the actual executed value shall be paid in 45 days on submission of Performance Bank Guarantee of 10% amount, in our format valid up to a defect liability period for 24 months from the date of handing over of the scheme including submission of Electrical Inspector Clearance Certificate, Compliance of final punch point, No Demand Certificate, Letter of Indemnity by the Contractor (The format of No Demand Certificate and Letter of Indemnity are attached as Annexure) and after reconciliation & adjustments of payments, if any towards quantities of materials issued from purchaser's stock and consumed by the contractor for expeditious completion of the job.

37.3. **PACKAGE B:**

37.3.1. **FOR SUPPLY OF EQUIPMENT AND MATERIALS:**

i. 70% prorata of supply value item-wise shall be payable against R/A bills for supply of equipments and materials within 30 days against receipt & acceptance of material at site and submission of following documents duly certified by BRPL Project-in-charge, complete in all respects:
   a) Signed copy of accepted Purchase Order (for first payment)
   b) LR / RR / BL as applicable
   c) Challan as applicable
   d) One (01) copy of Contractor's detailed Recipient Invoice showing Commodity description, quantity, unit price, total price and basis of delivery, and being 100% of the value of the consignment claimed.
   e) One (01) copy of Contractor's transporter invoice duly receipted by BRPL Stores & Original certificate issued by BRPL confirming receipt of the subject material at Stores/Site and acceptance of the same as per the provisions of the contract.
   f) One (01) copy Packing List / Detailed Packing List
   g) Approved Test certificates / Quality certificates, if applicable
   h) Certificate of Origin, if applicable
   i) Material Dispatch Clearance Certificate (MDCC)
   j) Insurance Policy / Certificate, if applicable
   k) Warranty / Guarantee Certificate, if applicable
   l) Checklist for bill submission

ii. 20% prorata on account of supply value of the actual executed value after installation/erection of material duly certified by BRPL Project-in-charge.

iii. Balance 10% on account of supply value of the actual executed value shall be paid in 30 days after completion of successful acceptance testing, commissioning and handing over of complete systems duly certified by BRPL Engineer-in-Charge specified in the tender and on submission of performance Bank Guarantee of 10% amount, in our format valid up to a defect liability period from the date of handing over of the scheme including submission of Electrical Inspector Clearance Certificate, Compliance of final punch point, No Demand Certificate, Letter of Indemnity by the Contractor (The format of No Demand Certificate and Letter of Indemnity are attached as Annexure) and after reconciliation & adjustments of payments, if any towards

quantities of materials issued from purchaser's stock and consumed by the contractor for expeditious completion of the job.

37.3.2. **FOR LAYING, ERECTION, INSTALLATION AND TESTING & COMMISSIONING:**

i. 90% pro-rata payment of total installation value of the actual executed value shall be made progressively on submission of your running invoices on Monthly basis duly certified by our Engineer In charge & shall be paid within 30 days on receipt of such bills at our office.

ii. Balance 10% on account of total installation value of the actual executed value payable shall be paid in 30 days after completion of successful acceptance testing, commissioning and handing over of complete systems duly certified by BRPL Engineer-in-Charge specified in the tender and on submission of performance Bank Guarantee of 10% amount, in our format valid up to a defect liability period from the date of handing over of the scheme including submission of Electrical Inspector Clearance Certificate, Compliance of final punch point, No Demand Certificate, Letter of Indemnity by the Contractor (The format of No Demand Certificate and Letter of Indemnity are attached as Annexure) and after reconciliation & adjustments of payments, if any towards quantities of materials issued from purchaser's stock and consumed by the contractor for expeditious completion of the job.

iii. Purchaser has the right to recover tax loss, interest and penalty suffered due to any non-compliance of tax laws by the Contractor. In the event, Purchaser is not able to avail any tax credit due to any shortcoming on the part of the Contractor (which otherwise should have been available to Purchaser in the normal course), then the Contractor at his own cost and effort will get the shortcoming rectified. If for any reason the same is not possible, then the Contractor will make 'good' the loss suffered by Purchaser due to the tax credit it lost. In such event, any amount paid to the Contractors shall be first attributable to the tax (GST) charged in the invoice and the balance shall be considered towards the 'value' of supply of goods/ services.

iv. Purchaser shall deduct "Tax Deducted at Source" wherever applicable and at the rate prescribed under the GST Laws or any other Indian law and remit the same to the Government. Necessary TDS certificates as per law shall be issued by the purchase to the Contractor.

v. Any liability arising out of dispute on the tax rate, classification under HSN, calculation and payment of tax to the Government will be to the Contractor's account.

vi. Where the supply of Goods is liable to GST under reverse charge mechanism, then the Contractor should clearly mention the category under which it has been registered and also that "the liability of payment of GST is on the Recipient of Supply".

38. Performance Guarantee

38.1. The Contractor shall submit the following Bank Guarantees within specified timelines:

Type of Bank Guarantee	Submission Timeline	Validity Period
Contract Performance Bank Guarantee (10% of Total Contract Value including GST)	Within 28 days of Issue of LOI/ LOA/ Purchase Order	Valid until 90 days beyond the Project Completion / Handing Over
Bank Guarantee against Advance	Along with invoice for advance amount	Valid until completion of supplies/work under the contract

(For the advance payment made)		
Equipment Performance Bank Guarantee (10% of Total Contract Value including GST)	At the time of claiming last payment and issuance of final Taking Over certificate by Purchaser/Owner	Valid until completion of Defect Liability Period plus 3 months

38.2. All Bank Guarantees shall be issued in favour of BSES Rajdhani Power Ltd. and must conform to the format prescribed by BRPL.

38.3. Performance Guarantee Forfeiture: Each Performance Bond established under Clause 38.1 shall contain a statement that it shall be automatically and unconditionally forfeited, without recourse, and payable against the presentation by BRPL of this Performance Bond, to the relevant bank referred to above, together with a simple statement that Contractor has failed to comply with any term or condition outlined in the Contract.

38.4. Each Performance BG established under will be automatically and unconditionally forfeited without recourse if BRPL in its sole discretion determines that Contractor has failed to comply with any term or condition outlined in the contract.

38.5. Performance Guarantee Release: All Performance Bonds shall be released without any interest within seven (7) days following the expiry of the validity period specified in Clause 38.1, except in cases outlined under Clause 38.4.

38.6. Notwithstanding anything stated in this agreement, it is agreed by the Seller that in case of default by the seller in furnishing the Performance Bank Guarantee, the purchaser/BRPL, without prejudice to the rights available with the purchaser, shall be entitled to retain a total sum not exceeding 120% of the amount of required performance bank guarantee for the tenure and upon the terms as specified in this agreement. It is agreed that the purchaser shall not be paying any interest for the said sum retained by the purchaser in lieu of default by the seller in furnishing the performance bank guarantee and no claim of any nature shall be maintainable from the side of seller, disputing the above said retention. Whereas, in case, after the deduction of above sum by the purchaser, if the seller at any point of time, submits the PBG of the required value and tenure and requests for the refund of the amount retained on this ground, the purchaser shall be releasing the money retained in lieu of PBG without any interest/cost.

39. Defects Liability Period/ Warranty / Guarantee

39.1. The Guarantee Period will be equipment/service/work specific and shall be as specified in the Technical Specifications for the equipment/material/service/work and where technical specifications are not part of contract documents or guarantee period is not specified in the technical specifications, the Defect Liability Period shall be twenty-four (24) months from the date of Final Takeover of Packages by the Purchaser. The Bidder warrants the satisfactory performance of all works, equipment, and materials supplied as per the contract scope for twenty-four (24) months generally for substations or individual packages, and for a period of sixty (60) months for specified equipment such as GIS, PTR, Panels, CRP, Cable & Joints, from the date of Final Takeover.

39.2. The bidder shall stand guarantee that the equipment and material supplied/service or work rendered under the contract is free from design, manufacturing, material, construction, erection & installation and workmanship & quality defects and is capable of its due, rated and intended quality performance, as an integrated product delivered under the contract for a specific period termed as Guarantee Period. The bidder should also guarantee that the equipment/material is new and unused except for the usage required for the tests and checks required as part of quality assurance.

39.3. The Contractor is liable to rectify all defects arising from works executed or any act or omission during the Warranty/Defect Liability Period. The cost of repairs/rectification /replacement, apart from the actual cost of repairs/rectification/replacement is also inclusive of all bidder costs of required transportation, site inspection /mobilization/dismantling and re-installation costs as applicable, to be borne by the bidder. The bidder has to ensure that the interruption in the usage of intended purpose of the equipment is minimized to the maximum extent in lieu of the time taken for repairs/rectification/replacement.

39.4. The works shall be guaranteed against any defect or failure which may arise due to faulty materials, design or workmanship for a period of 24 months from the date of handing over of the substation. In case any defect in the work is observed during the defect liability period, the same shall be rectified by the Bidder at own cost including supply of all materials, labour, equipment and any other appliance in this regards (as per prevailing rates) for the fulfilment of all obligations under the Contract and to the satisfaction of the Company, within 10 days from the date of receipt of intimation from BRPL.

39.5. The Contractor shall repair or replace any materials/items supplied that exhibit defects or failures due to faulty materials, workmanship, or design throughout the Defect Liability Period.

39.6. If during the Defects Liability Period any goods are found defective, the Bidder shall promptly replace or rectify them at its own cost, including dismantling and reinstallation, as directed by the Purchaser. If removed from site, the goods must be returned at the Contractor's cost within the agreed schedule from receipt of intimation.

39.7. The Contractor shall dispatch service personnel within 48 hours in emergencies and ensure availability of manpower and spares throughout the warranty period.

39.8. However, if the situation, in BRPL's sole discretion warrants an emergency restoration, it reserves the right to take immediate action for identifying the fault and restoring the system with available resources & materials or with help from any other third-party agency under intimation to the Contractor. All costs of replacement, substitution, shipping, labour and other related expenses including taxes and levies incurred in connection with the restoration of fault plus 15% of expenses incurred as administrative overheads shall be for the account of Contractor. BRPL will charge the Contractor for the costs incurred for fault restoration or may set off such costs against any amount payable by BRPL to the Contractor or deduct from the PBG submitted by the Contractor. Contractor shall pay BRPL the amount within 30 days.

39.9. Fault root cause analysis shall be jointly conducted by BRPL's CES, O&M, OEM teams and the Contractor. If faults arise from reasons other than faulty material, design, or workmanship, the Contractor shall be exempt from further liability or cost.

40. Latent Defect Liability Period

40.1. Upon completion of the Defect Liability Period, the Contractor's responsibility shall cease except for latent defects.

40.2. Latent defects are defined as inherent defects in materials or deficiencies arising from design or design implementation that are not apparent during the Defect Liability Period.

40.3. The Contractor's Liability for latent defects warranty shall be for a period of Five (5) years commencing from the date of Taking over of the package and shall be commence along with the Defects Liability Period for all the supply items and the work executed under the contract.

40.4. Notwithstanding the completion of the Defects Liability Period, the Contractor shall be responsible for expeditiously making good by repair or replacement at its option and at its cost and expense any Latent Defect which appears before the expiry of the Latent Defects Liability Period.

41. Support beyond the Guarantee Period

41.1. The Contractor shall ensure the availability of spare parts and necessary technical support for a minimum period of ten (10) years following the completion of the equipment guarantee period under the contract. The Contractor must notify BRPL at least twelve (12) months in advance of the End-of-Life Support for the supplied product or technology.

42. Return, Replacement or Substitution

42.1. BRPL shall promptly notify the Contractor upon identification of any defective commodity. At its sole discretion, BRPL may return such defective commodities to the Contractor for replacement at no cost to BRPL or reject the commodities and procure the same or similar items from a third party. In the event of such third-party procurement, BRPL shall provide the Contractor with proof of the replacement purchase cost.

42.2. All costs associated with replacement, substitution, shipping, labor, and other related expenses incurred in connection with the return and replacement or third-party procurement of the commodity shall be borne by the Contractor. BRPL reserves the right to deduct such costs from any payments due to the Contractor.

42.3. Should the cost of the substitute commodity exceed the price quoted in the Contractor's bid, the Contractor shall reimburse BRPL for the difference.

42.4. At BRPL's sole discretion, materials or goods rejected and not collected by the Contractor within forty-five (45) days from the date of rejection notification may be disposed of by BRPL.

43. Effective Date of Commencement of Contract

43.1. The Contract shall be deemed to commence on the date of issuance of the Letter of Intent, Letter of Acceptance, or Purchase Order, whichever is earlier, and this date shall be considered as the effective commencement date for all contractual obligations.

44. Time - The Essence of Contract

44.1. The date specified for completion of the "Project" in the Letter of Acceptance or Purchase Order issued to the Contractor shall be deemed to be of the essence of the Contract. The Contractor is required to complete the Project on or before the stipulated schedule and completion date.

45. Project Completion Timelines

45.1. The contractual delivery for the Goods or Services shall adhere strictly to the defined schedule:

Package Name	Total Months for Handing over of the Package, From Zero Date	Total No. of Days for Handing over of the Package From Zero Date
Package A - Survey, Design, Supply, Installation, Testing And Commissioning Including Associated Civil Works on Turnkey Basis	12 months	356 days
Package B - Survey, Design, Supply, Laying, Jointing, Testing And Commissioning of Cables With Required Accessories	5 months	150 days

as per the Scope of Work on Turnkey Basis		

45.2. The Contractor shall submit a detailed PERT chart or L2 Network plan for execution of the awarded package to BRPL for review and approval within fifteen (15) days of issuance of Letter of Intent (LOI) or Letter of Award (LOA). The detailed execution schedule, including intermediate milestones, shall be as follows:

45.2.1. **Package A Timeline:**

SL NO	ACTIVITY	TIMELINE
1	Zero Date (Letter of Intent/Award)	Zero Date
2	Mobilization of Manpower	15 days from Zero Date
3	Submission of Drawings/Documents/ calculations for Engineering Approval	60 days from Zero Date
4	Engineering Approval	90 days from Zero Date
5	Civil Works	220 days from Zero Date
6	Procurement/Supplies	230 days from Zero Date
7	Equipment Erection	290 days from Zero Date
8	Commissioning of 1st Power Transformer	310 days from Zero Date
9	Commissioning of 2nd Power Transformer	330 days from Zero Date
10	Testing & Commissioning of entire substation	350 days from Zero Date
11	Handing Over	365 days from Zero Date or as per the mutually agreed schedule

45.2.2. **Package B Timeline:**

SL NO	ACTIVITY	TIMELINE
1	Zero Date (Letter of Intent/Award)	Zero Date
2	Mobilization of manpower	15 days from Zero Date
3	Submission of Drawings/Documents/calculations for Engineering Approval	15 days from Zero Date
4	Engineering Approvals	30 days from Zero Date
6	Procurement/Supplies	75 days from Zero Date
7	Testing & Commissioning of line	130 days from Zero Date or as per the mutually agreed schedule
8	Handing Over	150 days from Zero Date or as per the mutually agreed schedule

45.3. Delivery shall be at F.O.R BRPL - Delhi stores/sites.

45.4. The Contractor shall submit a deployment plan for Tools & Plants (T&P) and manpower required for the project. Failure to deploy required T&P, manpower, or construction materials may result in the Employer arranging these at the Contractor's cost plus a 20% service charge, deductible from payments due.

45.5. The Contractor shall mobilize the team at site immediately upon receipt of order and plan round-the-clock parallel working to meet schedule milestones.

45.6. Weekly progress meetings shall be held on site between the Contractor and Engineer-in-Charge. The Contractor shall submit a weekly report detailing manpower deployment and major milestones achieved.

45.7. Strict adherence to the agreed schedule is mandatory. Failure to maintain quality or timeliness may result in the Employer withdrawing work wholly or partially without notice or liability.

45.8. Project schedules shall be periodically reviewed with the Employer, who may direct corrective actions including additional resources or night work at no extra cost. The Employer reserves the right to revise work schedules to meet project requirements without entitlement for extra payment.

45.9. The Contractor shall carry out work on Sundays and holidays, except National Holidays, if required to meet the schedule with prior written permission from Engineer-in-Charge.

45.10. BRPL Engineer-in-Charge shall certify final completion of work.

46. Extension of Time and Time Overrun

46.1. Extension of time may be granted at the Company's discretion if delays are not the Contractor's fault, subject to the Contractor submitting detailed justification within ten (10) days of the delay's occurrence. Such extension does not warrant any increase in contract price and does not prejudice the Company's right to recover liquidated damages.

47. Liquidated Damages

47.1. LD FOR DELAY IN COMPLETION OF WORK

47.1.1. Time is the essence of the Contract. Following issuance of the Letter of Intent/Letter of Award, the contractual network (L2 network) shall be finalized and approved by BRPL. The Contractor must adhere strictly to the agreed completion schedule and intermediate milestones.

47.1.2. If supply of items / equipment is delayed beyond the supply schedule as stipulated in LOI/PO, then the Supplier shall be liable to pay the Purchaser for delay a sum of 0.5% (half percent) of the total price for every week of delay or part thereof for undelivered units.

47.1.3. If the Contractor fails to successfully hand over the awarded Packages within the agreed contract completion schedule, the contractor shall pay to the Purchaser, Liquidated damages for the delayed period at the rate of 0.5% of the total contract price per each week of delay or Pro-rata thereof, by which the Completion is delayed.

47.1.4. The maximum liquidated damages (LD) for delay shall not exceed 10% of the Contract Value.

47.1.5. It is agreed that liquidated damages constitute a genuine pre-estimate of damages and are not a penalty.

47.2. OVERALL LIQUIDATED DAMAGES:

47.2.1. The overall Maximum LD for delay is 10% of the Contract Value.

47.2.2. However, the total Liquidated Damages for delay will be limited as hereinafter provided below.

47.2.3. Notwithstanding the above, in the event the Contractor fails to complete the package as per the schedule; and delays the "Handling Over" of the package up to a period for which the liquidated damage for time delay becomes more than ten percent (10%) of the Contract Price, then the Purchaser at his sole discretion, shall be entitled to treat the failure as an act of default by the Contractor and same shall entitle the Purchaser to terminate the Contract.

47.3. Penalty for non-compliance of safety practices and site cleanliness: A penalty of 2.5% of bill amount shall be levied in each case of non-compliance of safety practices and site cleanliness.

47.4. The Purchaser may, without prejudice to any method of recovery, deduct the amount for such damages from any amount due or which may become due to the Contractor or from the Performance Bond or file a claim against the Contractor.

47.5. If the Penalty is levied as per the Order terms & conditions; BRPL will raise the Invoice for the penalty amount along with applicable GST rates. Accordingly, after setting off the penalty Invoice amount, net payment shall be made.

48. Recoveries

48.1. Whenever any sum is recoverable from the Contractor under this contract, the Purchaser shall be entitled to recover such amount by appropriating, in whole or in part, any sums due or that may become due to the Contractor under this contract. If such sums are insufficient to cover the full amount recoverable, the Contractor shall pay the outstanding balance to the Purchaser upon demand.

49. The Micro, Small and Medium Enterprises (MSME)

49.1. If the Contractor's establishment falls under the scope of the Micro, Small and Medium Enterprises Development Act, 2006 and its amendments, the Contractor shall declare this status within the bid. Failure to do so will be deemed as confirmation that the Contractor is a non-MSME unit. The Contractor must also submit a copy of the Udyog Aadhaar (UA) and Udyam Registration Number, along with the PAN number.

50. Transfer and Subcontracting

50.1. The Contractor shall not subcontract, transfer, assign, or otherwise part with the Contract or any part thereof, either directly or indirectly, without the prior written approval of the Purchaser.

50.2. Notwithstanding any subcontracting, the Contractor shall remain entirely responsible for the execution, completion, and satisfactory performance of the Work, in full compliance with the Purchase Order, specifications, approved drawings, and data sheets. The Contractor shall also be fully accountable for any acts, omissions, defaults, or negligence of any subcontractor.

51. Intellectual Property Rights and Royalties

51.1. The Contractor shall indemnify the Purchaser and the Purchaser's Representative against all claims and proceedings arising from infringement or alleged infringement of any patent rights, registered designs, copyright, design, trademark, trade name, know-how, or other intellectual property rights (collectively referred to as "Intellectual Property Rights") relating to the Works, Contractor's equipment, machines, methods, plant, materials, or anything required for execution of the Works. In case of infringement, the Contractor shall, at its own cost, either rectify, modify, or replace the infringing item so that infringement ceases, or procure necessary rights or licenses from the affected third party.

51.2. The Contractor shall be promptly notified of any claim made against the Purchaser. The Contractor shall, at its cost, conduct negotiations for the settlement of such claim, and any litigation or arbitration that may arise from it. The Purchaser or the Purchaser's Representative shall not make any admission that might be prejudicial to the Contractor unless the Contractor has failed to take over the conduct of the negotiations, litigation or arbitration within a reasonable time after having been so requested. In the event of the Contractor failing to act at the Purchaser's Representative's notice, the Purchaser shall be at full liberty to deduct any such amount of pending claim from any amount due to the Contractor under the Contract or any other contract and the balance portion of claim shall be treated as debt due from the Contractor.

51.3. Intellectual Property Rights in any plant, materials, drawings, designs, plans, documents, specifications, data, know-how, charts, or information provided by the Purchaser remain the sole property of the Purchaser. The Contractor has only a limited right to use these for execution of the Works.

51.4. Intellectual Property Rights in respect of any Plant, Materials, Drawings and Designs, plans, calculations, drawings, documents, know-how and information relating to the Works which are proprietary to the Contractor and/ or its third-party licensors ("Contractor's IPR") shall continue to vest with the Contractor and/ or its third-party licensors and the Contractor shall grant and/ or procure from its third party licensors, at its own cost, a worldwide, perpetual, royalty-free, non-exclusive license (along with the right to sub-license) to use and reproduce such Contractor's IPR for the use, operation, maintenance and repair of the Works.

51.5. If any patent, trademark, trade name, registered design or software is developed by the Contractor or its SubContractor specifically for the execution of the Works, then all Intellectual Property Rights in respect of such design, trademark, trade name or software shall be the absolute property of the Purchaser and shall not be utilized or retained by the Contractor (or its SubContractors) for any purpose other than with the prior written consent of the Purchaser.

51.6. If the Contractor uses proprietary software (whether customized or off the shelf) for the purpose of storing or utilizing records in relation to the Works, the Contractor shall obtain at its own expense, the grant of a worldwide, royalty-free, perpetual licence or sublicence (including the right to sublicense) to use such software, in favour of the Purchaser provided that the use of such software under the licence or the sublicense may be restricted to use any such software only for the design, construction, reconstruction, manufacture, installation, completion, reinstatement, extension, repair and operation of the Works or any part thereof.

51.7. If any software is used by the Contractor for the execution of the Works over which the Contractor or a third party holds pre-existing title or other rights, the Contractor shall obtain for the Purchaser, a worldwide, royalty-free, perpetual license for the right to use and apply that software (together with any modifications, improvements and developments thereof).

52. Contractor Code of Conduct

52.1. Contractor acknowledges having reviewed the BRPL policy on legal and ethical code required to be followed by Contractors encapsulated in the "Vendor/Contractor Code of Conduct" displayed on the official website of BRPL (www.bsesdelhi.com) also, which shall be treated as a part of the agreement/contract/PO/WO.

52.2. Contractor undertakes that he shall adhere to the Contractor Code of Conduct and also agrees that any violation of the Contractor Code of Conduct shall be treated as breach of the agreement/contract/PO/WO.

52.3. In event of any such breach, irrespective of whether it causes any loss/damage, company (BRPL) shall have the right to recover loss/damage including liquidated damages from Contractor.

52.4. The Contractor hereby indemnifies and agrees to keep indemnified the company (BRPL) against any claim/litigation/liability/penalty including litigation cost arising out of any violation of Contractor Code of Conduct by the Contractor or its officers, agents & representatives etc.

53. Limitation of Liability

53.1. Except in cases of willful misconduct, fraud, or gross negligence, neither Party shall be liable to the other for loss of use of any works, loss of profit, loss of contracts, or any other indirect or consequential damages arising out of or in connection with the Contract. The total liability of the Contractor to the Purchaser under this Contract shall not exceed the Contract Value.

53.2. Notwithstanding the above, this clause shall not limit the liability of the Contractor in the following cases:

53.2.1. Fraud, willful misconduct, or unlawful acts

53.2.2. Acts or omissions that violate the fundamental rules of diligence that a conscientious Contractor would observe under similar circumstances
53.2.3. Intellectual property infringement
53.2.4. Breach of confidentiality or data security obligations
53.2.5. Tax and statutory dues liabilities
53.2.6. Recovery of liquidated damages
53.2.7. Third-party death or personal injury

54. Liability of Suppliers/Contractors

54.1. Subject to the due discharge of its obligations under the Contract and except in case of willful misconduct, fraud, or gross negligence on the part of the Contractor or on the part of any person acting on behalf of the Contractor, with respect to any loss or damage caused by the Contractor to the Purchaser's property or the Site, the Contractor shall not be liable to the Purchaser for the following:
a) For any indirect or consequential loss or damage; and
b) For any direct loss or damage that exceeds:
i. The total payments made and expected to be made to the Contractor under the Contract including reimbursements, if any; or
ii. The insurance claim proceeds that the Contractor may be entitled to receive from any insurance purchased by the Contractor to cover such a liability, whichever is higher.

54.2. This limitation of liability shall not affect the Contractor's liability, if any, for damage to third-party property or injury or death of a person due to negligence of the Contractor or any Person or firm acting on behalf of the Contractor in executing the order.

54.3. Notwithstanding anything contained in the Contract, the Contractor shall not be liable for any willful misconduct, fraud, or gross negligence on the part of the Purchaser or any of its affiliates, any Contractor, or any party, other than Contractor and/or, its directors, officers, agents or representatives or its affiliates, or SubContractor, or the Contractor or any third party engaged by it.

54.4. Notwithstanding anything contained in the Contract, including but not limited to approval by the Purchaser of any drawings, documents, Contractor list, supply of information or data or the participation of the Purchaser in any meeting and/or discussion or otherwise, shall not absolve the Contractor from any of its liabilities or responsibilities arising in relation to or under the Contract.

55. Indemnification

55.1. The Contractor shall indemnify and hold harmless the Company from and against any and all liabilities, claims, damages, losses, or expenses arising out of or resulting from:
55.1.1. any breach non-observance or non-performance by contractor or its employees or agents of any of the provisions of this Work Order.
55.1.2. any act or omission of contractor or its employees or agents.
55.1.3. any negligence or breach of duty on the part of contractor, its employees or agents including any wrongful use by it or them of any property or goods belonging to or by COMPANY.
55.1.4. Any damages or loss related to free-issued materials, for which the Bidder shall submit an Indemnity Bond.

55.2. The Contractor shall at all times indemnify the Company against all liabilities to third parties, including employees or agents of the Company or the Contractor, for bodily injury, property damage, or any other loss arising out of or in connection with the execution or completion of the Works. This includes all costs, charges, and expenses incurred by the Company due to claims from such persons.

56. Events of Default

56.1. Each of the following events or occurrences shall constitute an event of default under the Contract:

56.1.1. The Contractor fails or refuses to pay any amounts due under the Contract;

56.1.2. The Contractor fails or refuses to deliver Commodities conforming to this RFQ/specifications, or fails to deliver Commodities within the period specified in P.O. or any valid extension thereof;

56.1.3. The Contractor becomes insolvent or unable to pay its debts when due, or commits any act of bankruptcy, such as filing any petition in any bankruptcy, winding-up or reorganization proceeding, or acknowledges in writing its insolvency or inability to pay its debts; or the Contractor's creditors file any petition relating to bankruptcy of Contractor;

56.1.4. The Contractor fails to complete the works in accordance with the approved schedule of works.

56.1.5. The Contractor fails to comply with any reasonable instructions or directions issued by the Company in connection with the execution of the works.

56.1.6. The Contractor otherwise fails or refuses to perform or observe any term or condition of the Contract and such failure is not remediable or, if remediable, continues for a period of 30 days after receipt by the Contractor of notice of such failure from BRPL specifying the failure.

57. Consequences of Default

57.1. If any Event of Default occurs and continues, BRPL may, by written notice, terminate the Contract forthwith.

57.2. Upon occurrence of an Event of Default, BRPL may, without prejudice to any other rights or remedies available under law or the Contract, exercise one or more of the following remedies;

57.2.1. Invoke and present the Performance Bond for payment;

57.2.2. Procure the same or equivalent Commodities from any third-party source; and/or

57.2.3. Recover from the Contractor any losses, damages, or additional expenses incurred as a result of the Contractor's default.

58. Force Majeure

58.1. An "Event of Force Majeure" shall mean any event or circumstance not within the reasonable control directly or indirectly, of the affected Party, but only if and to the extent that:

58.1.1. Such event or circumstance materially and adversely affects the ability of the affected Party to perform its obligations under this Contract, and the affected Party has taken all reasonable precautions, due care and reasonable alternative measures to prevent or avoid the effect of such event on the affected party's ability to perform its obligations under this Contract and to mitigate the consequences thereof.

58.1.2. For the avoidance of doubt, if such event or circumstance would not have materially and adversely affected the performance of the affected party had such affected party followed good industry practice, such event or circumstance shall not constitute force majeure.

58.1.3. Such event is not the direct or indirect result of the failure of such Party to perform any of its obligations under this Contract.

58.1.4. Such Party has given the other Party prompt notice describing such events, the effect thereof and the actions being taken to comply with the above clause.

58.2. **Specific Events of Force Majeure**

58.2.1. Subject to the provisions of above clause, Events of Force Majeure shall include only the following to the extent that they or their consequences satisfy the above requirements:

58.2.1.1. Natural elements or other acts of God, such as storms, floods, earthquakes, lightning, cyclones, landslides, or other natural disasters.
58.2.1.2. Explosions or fires.
58.2.1.3. Epidemics, pandemics, or plagues.
58.2.1.4. Declared war by the Government of India.
58.2.1.5. Dangers of navigation or perils of the sea.
58.2.1.6. Cyber security incidents impacting grid operations.
58.2.1.7. Pandemic-related lockdowns.
58.2.1.8. Climate change events beyond traditional natural disasters.
58.2.1.9. Embargoes.
58.2.1.10. Supply chain or industrial disturbances beyond reasonable control.

58.2.2. Note: Force Majeure shall not apply to financial inability, labor shortages, power failures, strikes, accidents, or subcontractor defaults.

58.3. **Notice of Events of Force Majeure**

58.3.1. If a force majeure event prevents a party from performing any obligations under the Contract in part or in full that party shall:
58.3.1.1. Immediately notify the other party in writing of the force majeure events within 7(seven) working days of the occurrence of the force majeure event
58.3.1.2. Be entitled to suspend performance of the obligation under the Contract which is affected by force majeure event for the duration of the force majeure event.
58.3.1.3. Use all reasonable efforts to resume full performance of the obligation as soon as practicable
58.3.1.4. Keep the other party informed of all such efforts to resume full performance of the obligation on a regular basis.
58.3.1.5. Provide prompt notice of the resumption of full performance or obligation to the other party.

58.4. **Mitigation of Events of Force Majeure**

58.4.1. Each Party shall:
58.4.1.1. Make all reasonable efforts to prevent and reduce to a minimum and mitigate the effect of any delay occasioned by an Event of Force Majeure including recourse to alternate methods of satisfying its obligations under the Contract;
58.4.1.2. Use its best efforts to ensure resumption of normal performance after the termination of any Event of Force Majeure and shall perform its obligations to the maximum extent practicable as agreed between the Parties; and
58.4.1.3. Keep the other Party informed at regular intervals of the circumstances concerning the event of Force Majeure, with best estimates as to its likely continuation and what measures or contingency planning it is taking to mitigate and or terminate the Event of Force Majeure.

58.5. **Burden of Proof**

58.5.1. In the event that the Parties are unable in good faith to agree that a Force Majeure event has occurred to an affected party, the Parties shall resolve their dispute in accordance with the provisions of this Agreement. The burden of proof as to whether or not a force majeure event has occurred shall be upon the party claiming that the force majeure event has occurred and that it is the affected party.

58.6. **Termination for Certain Events of Force Majeure**

58.6.1. If any obligation of any Party under the Contract is or is reasonably expected to be delayed or prevented by a Force Majeure event for a continuous period of more than 3 months, the Parties shall promptly discuss in good faith how to proceed with a view to reaching a solution on mutually agreed basis. If a solution on mutually agreed basis cannot be arrived at within a period of 30 days after the expiry of the period of three months, the Contract shall be terminated after the said period of 30 days and neither Party shall be liable to the other for any consequences arising on account of such termination.

58.6.2. The Purchaser may terminate the contract after giving 7 (seven) days' notice if any of the following occurs:

58.6.2.1. Bidder fails to complete the execution of works within the approved schedule of works, terms and conditions.

58.6.2.2. In case the Bidder commits any Act of Insolvency, or is adjudged insolvent

58.6.2.3. Has abandoned the contract

58.6.2.4. Has failed to commence work or has suspended the progress of works

58.6.2.5. Has failed to proceed with the works with due diligence and failed to make such due progress

58.7. **Limitation of Force Majeure event**

58.7.1. The Contractor shall not be relieved of any obligation under the Contract solely because the cost of performance is increased, whether as a consequence of adverse economic consequences or otherwise.

58.8. **Extension of Contract Period due to Force Majeure event**

58.8.1. The Contract period may be extended by mutual agreement of Parties by way of an adjustment on account of any period during which an obligation of either Party is suspended due to a Force Majeure event.

58.9. **Effect of Events of Force Majeure**

58.9.1. Except as otherwise provided herein or may further be agreed between the Parties, either Party shall be excused from performance and neither Party shall be construed to be in default in respect of any obligations hereunder, for so long as the failure to perform such obligations shall be due to an event of "Force Majeure".

59. Suspension or Extension

59.1. The Purchaser reserves the right to suspend or reinstate execution of the whole or any part of the Works without affecting the validity of the Contract provisions. Any orders for suspension or reinstatement shall be provided to the Contractor in writing. The completion time for the Works will be extended by a period equivalent to the duration of the suspension.

59.2. For any aggregate suspension period less than six (6) months, the Contractor shall not be entitled to claim reimbursement. If the suspension of the Works extends beyond six (6) months, the Purchaser will reimburse the Contractor only for necessary and demonstrable direct costs incurred, subject to satisfactory substantiation. Overheads, incidentals, and profit shall not be considered. The Purchaser's decision regarding such claims will be final and binding. The Purchaser shall bear no liability for suspension or delay arising from any default on the part of the Contractor or its sub-contractors; the Purchaser's decision in this respect shall also be final and binding.

60. Protection of Property

60.1. The Contractor shall be fully responsible for any damage caused by its operations. The Contractor shall ensure the protection of all persons, including members of the public,

employees of the Purchaser, employees of the Contractor and subcontractors, and safeguard all public and private property, including structures, buildings, plants, equipment, and utilities-whether located above or below ground.

60.2. The Contractor shall provide and maintain all necessary safety measures, such as barriers, signboards, warning lights, and alarms, to ensure adequate protection of persons and property. The Contractor shall give reasonable notice to the Purchaser and any affected parties regarding public or private property and utilities that may be subject to damage during the execution of the works, and shall coordinate all necessary arrangements for the removal, replacement, or protection of such property and utilities with the concerned authorities.

61. Severability

61.1. If any provision of this Agreement is found to be invalid, illegal, or unenforceable by a court of competent jurisdiction, such invalidity or unenforceability shall not affect the remaining provisions of the Agreement, which shall continue to be valid and enforceable to the fullest extent permitted by law.

62. Waiver of Rights

62.1. No failure or delay by either Party in enforcing any provision of this Agreement shall be deemed a waiver of that provision or of any subsequent breach. Any waiver granted must be expressly made in writing and shall apply only to the specific instance and shall not constitute a waiver of any other rights or breaches occurring thereafter.

63. Cleanliness & Precautions at Site

63.1. All debris shall be removed and disposed of at assigned areas on daily basis. Surplus excavated earth shall be disposed of in an approved manner. In short, the contractor shall be fully responsible for keeping the work site clean at all times. In case of non- compliance, company shall get the same done at Contractor's risk and costs.

63.2. While carrying out any civil work including road/ pit digging, plinth/ fence making, road restoration etc. contractor shall adhere to below mentioned guidelines:

63.2.1. No construction material/ debris shall be stored on metalled road.

63.2.2. Windbreakers of appropriate height on all sides of earmarked area using CGI sheets shall be raised to ensure that no construction material dust fly outside earmarked area.

63.2.3. The construction material i.e. coarse sand, stone aggregates, excavated earth, cement and any other material to and from the site shall be transported under wet and covered condition to ensure their non-slippage en-route to avoid air contamination.

63.2.4. The contractor shall provide mask and helmet to every worker working on the construction site and involved in loading/unloading and carriage of construction material and construction debris to prevent inhalation of dust particles.

63.2.5. Overloading of vehicles shall be strictly prohibited.

63.2.6. The construction material at site shall be stored under wet and covered conditions.

63.2.7. The dumping sites for temporarily storing the excavated earth shall be properly levelled, watered and rehabilitated by plantation to avoid flying of dust.

63.2.8. The worker at the site shall be sensitized to adopt/observe the dust-controlled measures in true spirit.

63.2.9. If any C&D waste is generated at site the same will be transported to the C&D waste site only and the record for the same will be maintained by the agency.

63.2.10. Wet jet in grinding and stone cutting is being permitted at site.

63.2.11. The necessary record for dust control is being maintained by the department on day to day basis and being monitored regularly.

63.2.12. Bidder shall ensure that no tree shall be harmed and no tree roots shall be destroyed/cut while performing the task under contract.

63.2.13. Contractor shall comply the provisions of The Delhi Preservation of Trees Act 1994.

63.2.14. The Execution Contractors shall be responsible for all the preventive and protective environmental steps as per guidelines. Any violations from the above guidelines have been viewed very seriously by the authorities. Concerned agency is liable for the penalties / other actions by the authorities, The Agency shall indemnify BRPL from all liabilities on this account.

64. Safety Code

64.1. The Contractor shall ensure that all safety precautions required by applicable laws are strictly observed at the work site. The Contractor shall be fully responsible for the safety of its workers, as well as all other personnel present at the site or premises. No worker under the age of eighteen (18) years shall be employed by the Contractor.

64.2. The Contractor shall comply with all safety requirements as detailed in the Company's Safety Manual, accessible at https://www.bsesdelhi.com, throughout all phases of the Contract.

64.3. Where subcontracting is approved in writing by the Company, the main Contractor shall ensure that all safety provisions are enforced by subcontractor personnel.

64.4. Contractors employing two hundred (200) or more employees, including contract workers, shall appoint a dedicated Safety Coordinator to oversee compliance with contractual safety obligations. Contractors with fewer employees shall nominate an employee to fulfill this role. The Safety Coordinator shall liaise with the Company's Safety Officer and have their name prominently displayed on a notice board at the work site.

64.5. The Contractor shall be fully liable for any non-compliance with safety measures, including consequences such as injuries, fatalities, and associated compensation liabilities.

64.6. In the event of any accident, the Contractor shall immediately submit a detailed report to the Owner and Safety Officer outlining the circumstances, injuries or fatalities, extent of property damage, and remedial measures taken to prevent recurrence. Additionally, the Contractor shall provide a monthly summary report of all accidents to the Owner.

65. Statutory Obligations

65.1. The Contractor shall comply with all applicable laws, by-laws, regulations, various Acts, Rules, codes, and standards including but not limited to

65.1.1. -The Child Labour (Prohibition & Regulation) Act, 1986,
65.1.2. -The Contract Labour (Regulation & Abolition) Act, 1970,
65.1.3. -The Employees Pension scheme, 1995,
65.1.4. -The Employees Provident Funds and Miscellaneous Provisions Act, 1952,
65.1.5. -The Employees State Insurance Act, 1948,
65.1.6. -The Equal Remuneration Act, 1976,
65.1.7. -The Industrial Dispute Act, 1947,
65.1.8. -The Maternity Benefit Act, 1961,
65.1.9. -The Minimum Wages Act, 1948,
65.1.10. -The payment of Bonus Act, 1965,
65.1.11. -The Payment of Gratuity Act, 1972,
65.1.12. -The Payment of Wages Act, 1936,
65.1.13. -The Delhi Shops & Establishment Act, 1954,
65.1.14. -The Company's Liability Act, 1938,
65.1.15. -The Sexual Harassment of Women at Workplace (Prevention, Prohibition and Redressal) Act, 2013,
65.1.16. -The Delhi Preservation of Trees Act 1994,
65.1.17. -The Workmen Compensation Act, 1923,
65.1.18. -Building and Other Construction Workers (Employment and Regulations) Act 1996,

65.1.19. -Building and Other Construction Workers (Cess) Act 1996,
65.1.20. -The Employers Liability Act, 1938,
65.1.21. -Indian Electricity Act, 2003 and Indian Electricity Rules,
65.1.22. -GST tax,
65.1.23. -And all other applicable laws, as amended, including any statutory approvals required by Central or State Government authorities, including the Ministry of Labour.

65.2. The Contractor shall indemnify the Purchaser fully for any financial liabilities arising out of non-compliance with the above provisions.

65.3. The Contractor shall comply all laws of the land and prevailing orders issued by various Govt Departments like Dept. of Power/DERC/NGT/Dept. of Forest/Dept. of Environment/DPCB/CPCB/Court orders etc. Broadly, the compliance shall be as detailed below, but not limited to:
65.3.1. An Electrical license.
65.3.2. PF Code No. and all employees to have PF A/c No. under PF every Act, 1952.
65.3.3. All employees to have a temporary or permanent ESI Card as per ESI Act.
65.3.4. ESI Registration No.
65.3.5. Sales Tax registration number, if applicable.
65.3.6. PAN No.
65.3.7. Work Contract Tax Registration Number/ VAT Registration.
65.3.8. Labour License under Contract Labour Act (R & A) Act 1970.
65.3.9. Delhi Building and other Construction Workers (Regulation of Employment and Conditions of Services) Rules, 2002(B.O.C.W.)
65.3.10. Additional obligations include:
65.3.10.1. Procuring a third-party Insurance Policy before starting work
65.3.10.2. Adhering to the Minimum Wages Act applicable in the state
65.3.10.3. Ensuring payment of salaries/wages exclusively via ECS into employees' bank accounts by the 7th of the succeeding month; in exceptional cases, crossed cheques may be issued, with full disclosure to HR (CMC)
65.3.10.4. Maintaining accurate Wage and Attendance Registers
65.3.10.5. Providing and maintaining a First Aid Box at the site
65.3.10.6. Submitting latest PF and ESI challans with certificates confirming timely deduction and deposit of contributions for all employees
65.3.10.7. Securing a Workman Compensation Policy, if applicable
65.3.10.8. Securing Labour License before starting work, if applicable

65.4. Prior to commencement, the Contractor shall provide the Company with permanent PF Code and ESI details of all employees.

66. Staff and Workman

66.1. It shall be the responsibility of the Contractor to:
66.1.1. Obtain the necessary Contract Labour License from the relevant authorities and maintain liaison with them. The Company shall provide required forms for obtaining such licenses. However, the Contractor shall bear all associated expenses, including registration with the Provident Fund Department relevant to the scope of work. The Contractor shall ensure monthly PF deposits for all staff and labor and furnish all related documentation to the Company.
66.1.2. Obtain and maintain workman insurance coverage for all deployed workers.
66.1.3. Maintain proper records for all employed workers in the form of various registers, including but not limited to:
66.1.3.1. Register of workmen
66.1.3.2. Register of muster rolls
66.1.3.3. Register of overtime
66.1.3.4. Register of wages

66.1.3.5. Any other registers required by the latest amendments to labour laws

66.1.4. Maintain all records in the prescribed formats.

66.1.5. Disburse monthly wages to workers and supervisors promptly and in the presence of Company representatives or as directed by labour authorities.

66.1.6. Maintain proper liaison with Project authorities, local police, and all other relevant governmental or local bodies.

66.1.7. Pay all workmen no less than the minimum wages prescribed under applicable State or Central labour laws. The Contractor shall ensure full compliance with the Minimum Wages Act, PF Act, ESIC Act, Workmen Compensation Act, Contract Labour Regulation and Abolition Act, and all related rules. In case of statutory non-compliance, the Company reserves the right to act at the risk and cost of the Contractor.

66.1.8. Employ the required number of skilled, semi-skilled, and unskilled workers as per site requirements to complete the project on schedule. The Contractor shall provide necessary safety equipment such as safety shoes, helmets, belts, and gloves to all workers and staff during erection and other works.

66.1.9. Employ adequate engineering and supervisory staff to ensure timely project completion. The day-to-day management and supervision of site works shall be the responsibility of the Contractor's Engineer-in-Charge, who will report to the Company's Engineer-in-Charge and assist in overall project execution.

67. Insurances

67.1. The Contractor, at their own cost, shall procure and maintain a Comprehensive Marine cum Storage cum Erection (MSE) insurance policy covering the entire Project cost.

67.2. Such insurance coverage shall be held jointly in the names of the Purchaser and the Contractor. The Contractor shall have the authority to liaise directly with the insurance company or companies throughout the Contract period and shall be responsible for maintaining all insurance policies in force.

67.3. The Contractor shall bear all risks of loss or damage to equipment during handling, transportation, storage, erection, commissioning, and all activities until the satisfactory completion and handover of Performance Guarantee tests of the plant. The Contractor shall promptly present all claims and shall be responsible for repairing or replacing any damaged or lost equipment.

67.4. For all insurance policies obtained, the Contractor shall handle claim settlements directly with underwriters without imposing any liability on the Purchaser. The Contractor shall arrange for replacement or rectification promptly without awaiting insurance claim settlements, bearing all related costs. Such events shall not entitle the Contractor to any extension of contract time or additional cost claims.

67.5. **Marine Transit Risk and Erection All Risk Coverage:**

67.5.1. The Contractor shall secure coverage for marine transit risk related to supply materials at 100% of their declared value and erection all-risk coverage for 100% of the Project cost. This coverage shall include, but is not limited to, loss or damage from AOG perils, earthquakes, and acts of terrorism.

67.6. **Third Party Insurance:**

67.6.1. Prior to commencing work, the Contractor shall obtain third-party insurance at their own cost to cover any loss, damage, or injury to property or persons (including those of the public, employees, and representatives of any outside agency or the Company) arising out of or in connection with performance of the work or temporary works. The

Contractor shall be responsible for settling all claims related to third-party insurance without involving the Purchaser/Owner and shall promptly arrange replacement or rectification at their own cost.

67.7. **Group Personal Accident Insurance:**

67.7.1. The Contractor shall secure accidental insurance coverage for all staff deployed under this Agreement, covering death, permanent total disability, and partial permanent disability due to external accidents, with a minimum coverage of Rs. 15 Lakh (Table C). Permanent total disability coverage shall be 125% of the basic sum assured. The Contractor shall ensure same-day on-the-spot claim settlement with the legal heirs of any victim, without awaiting insurance claim settlements and without any liability on BRPL. The Contractor shall bear the full premium costs of this coverage and provide copies of all relevant policies within fifteen (15) days of commencement of work.

67.8. **Insurance for Man, Material & Machinery Deployed at Site:**

67.8.1. The Contractor shall be responsible for insuring its personnel, materials, and machinery deployed at the site for the awarded package. Copies of such insurance policies shall be furnished to the Purchaser prior to the start of work.

67.9. **Workman Compensation:**

67.9.1. The Contractor shall obtain and maintain a valid insurance policy under the Workman Compensation Act to cover all workers who are not already covered under Employees' State Insurance (ESI) and Provident Fund (PF), engaged in executing the jobs covered under this Contract. A copy of the insurance policy shall be provided to the Company for reference and record-keeping. If all workers are covered under ESI and PF, the Contractor shall certify this status to the Company.

67.9.2. The Contractor shall indemnify and keep the Company indemnified against all claims for compensation under the provisions of the Workmen Compensation Act, 1923, as amended from time to time, or under any other applicable law related to compensation payable to workers employed by the Contractor, subcontractors, or agents for work under this Contract. This indemnity includes all costs, expenses, and liabilities incurred by the Company in connection with such claims, without prejudice to the Company's rights to recover amounts.

67.9.3. The Company shall be entitled to deduct from any amounts due or to become due to the Contractor all moneys paid or payable in connection with such claims, costs, or expenses. The Contractor agrees to abide by the Company's decision concerning the sums payable under this clause.

68. Human Resource Issues

68.1. The Contractor shall execute the works using its own resources and shall bear all costs related to salaries, allowances, perks, travel expenses, advances, insurance, safety measures, security, transportation, and any other miscellaneous expenses for their employees and workmen during the tenure of the Annual Maintenance Contract (AMC). The Contractor shall also be solely responsible for payments related to outpatient care, hospitalization, and compensation in the event of any accident, injury, or death.

68.2. The issuance of ID cards for the Contractor's workforce shall be managed exclusively by the BRPL Security ID Card Cell. Contractors must maintain records of identity cards and promptly collect and return cards upon employee separation. Failure to comply will attract penalties.

Contractors shall submit a detailed employee list to BRPL Security prior to contract commencement.

68.3. The Contractor shall deploy manpower immediately as required to perform the specified work.

68.4. The Contractor must ensure that no disputes arise concerning service conditions or payments during the contract period. Employees of the Contractor shall not make claims or demands on the Company for employment, wages, allowances, or related matters at any time.

68.5. The Contractor shall not deploy personnel below 18 years of age and shall not deploy female workers between 7 PM and 6 AM.

68.6. The Contractor shall be solely responsible for any disputes arising between it and its employees and shall indemnify the Company against all resultant losses, damages, and claims. All legal dues to employees must be paid timely or within eight days post-termination.

68.7. The Contractor shall provide and ensure regular use of all necessary safety gear by its workforce, including safety shoes, helmets, gloves, belts, goggles, etc., at its own cost.

68.8. The Contractor shall maintain discipline among its workforce and adhere to the Company's disciplinary procedures at the site. The Company reserves the right to object to the presence of any Contractor employee deemed to exhibit misconduct or negligence; such personnel must be replaced immediately upon request.

68.9. The Contractor shall ensure compliance with:

68.10. Payment of minimum wages as notified by the Government of the National Capital Territory of Delhi

68.11. Salary disbursement strictly via ECS

68.12. Timely deduction and deposit of ESI and PF contributions, with submission of relevant documentation to the Company

68.13. The Company reserves the right to require Contractor services on holidays or beyond normal working hours, with written communication provided by the Engineer In-Charge.

68.14. The Contractor shall ensure none of its personnel engage in activities detrimental to the Company's interests. Any violations may lead to actions as per tender terms.

68.15. The Contractor is responsible for all applicable taxes and duties payable to central, state, or local authorities.

68.16. Contractor employees shall not be considered employees of the Company and are not entitled to Company benefits or facilities. Should the Company incur liabilities due to Contractor employee-related laws or enactments, such costs shall be recoverable from the Contractor, including any sums payable.

68.17. The Contractor shall fully comply with all applicable statutory Acts.

68.18. The Contractor shall submit compliance documentation as per the format attached as Annexure I.

68.19. The Contractor shall adhere to the Vendor/Bidder Code of Conduct as specified in the NIT.

69. Environmental, Health & Safety Plan

69.1. Contractor will make ensure that the Environment, Health & Safety (EHS) requirements are clearly understood and faithfully implemented at all levels at site as per instruction of Company. Contractors must comply with these requirements:

69.1.1. Comply with all of the elements of the EHS Plan and any regulations applicable to the work.

69.1.2. Comply with the procedures provided in the interests of Environment, Health and Safety.

69.1.3. Ensure that all of their employees designated to work are properly trained and competent.

69.1.4. Ensure that all plant and equipment they bring on to site has been inspected and serviced in accordance with legal requirement and manufacturer's or Contractors' instructions.

69.1.5. Make arrangements to ensure that all employees designated to work on or visit the site present themselves for site induction before the commencement of work.

69.1.6. Provide details of any hazardous substances to be brought onsite.

69.1.7. Ensure that a responsible person accompanies any of their visitors to site.

69.1.8.

69.1.9. All contractor's staff are accountable for the following:

69.1.10.

69.1.11. Use the correct tools and equipment for the job and use safety equipment and protective clothing supplied, e.g. helmets, goggles, ear protection, etc. as instructed.

69.1.12. Keep tools in good condition.

69.1.13. Report to the Supervisor any unsafe or unhealthy condition or any defects in plant or equipment.

69.1.14. Develop a concern for safety for themselves and for others.

69.1.15. Prohibit horseplay.

69.1.16. Not to operate any item of plant unless they have been specifically trained and are authorized to do so.

70. Guidelines Regarding Inspection & Maintenance of Pits/Dugs

70.1. The contractor shall ensure strict compliance of the following directions:

70.1.1. The sites of all manholes, pits, holes, tanks or any other opening in the ground of any kind shall be regularly inspected and maintained.

70.1.2. Schedule and protocols of inspections and maintenance shall be drawn up and notified to BRPL.

70.1.3. These sites shall be cordoned off to render them inaccessible to the public.

70.1.4. The existence of these sites shall be clearly & visibly marked by the display of signboards/ signages.

70.1.5. If they are required to be covered, it shall be ensured that the covers are in place.

70.1.6. If required, as per law, prior permission from authorities shall be secured before the commencement of work.

70.1.7. Bidder shall follow all laws of the land and prevailing borders issued by various Govt departments like Dept of Power / DERC /NGT/ Dept of Forest/Dept of Environment/DPCB/Court Orders etc.

71. Measures Related To the Tree Pruning, Excavation near Tree and Construction & Demolition

71.1. Notwithstanding anything stated in the tender document, work contract or any other communication issued related to the performance of the work order awarded, it is clarified that the Contractor and its associate/employees/worker, during the performance of work under this tender, shall ensure full compliance of the provisions of all environment laws/rules/directions by any authority including judicial authority/ regulation related to excavation near tree and construction & demolition activity, and shall mandatorily comply the following instructions:

71.1.1. **Tree Pruning, Planning, Installation and Maintenance of Utility Apparatus in proximity to trees shall be done mandatorily by ensuring the following prescribed measures:**

71.1.1.1. No excavation work shall be done within two (2) meters of the Tree Trunk.
71.1.1.2. Any exposed roots beyond 2 meters of the tree trunk, should be protected with dry sacking and backfilling must be done with a suitable manure mixture and/or the compost material mix as soon as possible on the completion of the works.
71.1.1.3. For any excavation to be carried out beyond the prescribed distance of 2 meters but within 3 meter from the tree trunk, manual methods (by use of hand) or by using trenchless techniques shall be preferred over use of a mechanical excavation.
71.1.1.4. No roots shall be cut during the excavation work.
71.1.1.5. Not to lean any materials against or chain mechanical plants to the trunk of the trees.
71.1.1.6. Avoid any soil contamination from oil, gasoline, paint and paint thinner or other chemicals.
71.1.1.7. No concrete or construction or repairing work shall be done at least within two (2) meter radius of the trunk of trees.
71.1.1.8. All the electric wires and high tension cables and other apparatus relating to supply of electricity shall permanently be removed from the trees branches.

71.1.2. **Records to be maintained by the supervisor to demonstrate adherence to the guidelines for excavation in Proximity to the Trees:**

71.1.2.1. Ensure pre and post photography and videography of the site demarcated for the excavation work and the same shall not be deleted/removed until securing the prior permission of the Circle head O&M.
71.1.2.2. While digging and upon exposure to the roots– take immediate photographs of the same and report the matter to senior officers for further guidance.
71.1.2.3. If any unauthorized layering of other cables is being carried out at the digging site by some other agency/person, then immediately capture photographs of the same and inform the seniors, who shall take suitable legal actions, if required, which includes intimating to tree officer about such unauthorized laying of wires by such agency.

71.2. **DUST MITIGATION MEASURES FOR CONSTRUCTION & DEMOLITION ACTIVITIES**

71.2.1. Any construction/demolition/excavation related activity performed in furtherance of the performance of work under award, be undertaken only after ensuring the Dust Mitigation Measures prescribed as follows:

71.2.1.1. Dust/wind breaking walls of appropriate height around the periphery of the construction site.
71.2.1.2. Installation of Anti Smog Gun(s) (for >20,000 m2 built up area).
71.2.1.3. Tarpaulin or green net on scaffolding around the area under-construction and the building.
71.2.1.4. All vehicles including carrying construction material and construction debris of any kind should be cleaned and wheels washed.
71.2.1.5. All vehicles carrying construction material and construction debris should be fully covered and protected.

71.2.1.6. All construction debris and construction material of any kind should be stored on the site and not dumped on public roads or pavements.

71.2.1.7. No loose soil or sand or Construction & Demolition Waste or any other construction material which may cause dust, shall not be left uncovered.

71.2.1.8. No grinding and cutting of building materials in open area. Wet jet should be used in grinding and stone cutting.

71.2.1.9. Unpaved surfaces and areas with loose soil should be adequately sprinkled with water to suppress dust.

71.2.1.10. Roads leading to or at construction sites must be paved and blacktopped i.e., metallic roads (for >20,000 m2 built up area).

71.2.1.11. Construction and demolition waste should be recycled on-site or transported to authorized recycling facility and due record of the same should be maintained.

71.2.1.12. Every worker working on construction site and is involved in loading, unloading and carriage of construction material and construction debris should be provided with dust-mask to prevent inhalation of dust particle.

71.2.1.13. Arrangement should be provided for medical help, investigation and treatment to workers involved in the construction of building and carry of construction material and debris relatable to dust emission.

71.2.1.14. Dust mitigation measures shall be displayed prominently at the construction site for easy public viewing.

71.2.1.15. Ensure the compliance of all dust control measure.

71.3. It is clarified that BRPL has zero tolerance with respect to the non-compliance/breach of environment laws/rules/directions by any authority including judicial authority/ regulation. Accordingly, in case of breach by the Contractor/its associate/employee/worker to the laws/rules as detailed above, shall be termed as serious breach to the terms of work order and BRPL shall be free to take all actions against Contractor for such breach of contract including the termination of the said contract. Additionally, the Contractor shall also be liable to indemnify BRPL/its Directors/Officers/Employees/Associates in full including the payment of all loss/penalties/compensation including environment compensation as imposed by any judicial/quasi-judicial citing/alleging such breach.

71.4. The Contractor shall also be under a mandate to provide an Undertaking to BRPL, which includes that the excavation, tree pruning, construction and demolition work, if performed by such Contractor, the same shall be in strict adherence of all environment laws/rules/directions by any authority including judicial authority/ regulation and all the measures provided in work order/tender under the head/title "Measures related to the Tree Pruning, excavation near tree and construction & demolition".

72. Commissioning & Acceptance Test

72.1. Upon completion of the Works, the Contractor shall conduct a trial run or operational test in the presence of the Engineer In Charge. The system shall be operated under the Contractor's supervision during this period. The Contractor shall promptly undertake any necessary rectifications or modifications identified during the trial run.

72.2. Upon satisfactory completion of the trial run, the system shall be considered energized and placed into commercial operation. The Engineer In Charge will issue a certificate of acceptance confirming successful commissioning.

73. Work Completion Certification, Handing Over

73.1. The work carried out by the Contractor under this order has to be certified by Engineer In-charge for satisfactory completion of work allotted to the contractor with respect to specifications / Field Quality Procedures as per applicable standards. In case of modification/correction to be carried out, contractor shall carry out the said modifications/correction without additional cost. The Contractor shall remain in close contact with Engineer In-Charge at site to report the general findings of the fieldwork during the initial as well as later stage of the work at site.

73.2. Upon the successful completion of all testing and commissioning of the items and works under the package, and subject to the Purchaser's/Owner's satisfaction, the Purchaser shall issue a "Taking Over Certificate" to the Contractor. This certificate shall serve as the final acceptance of the package and shall only be issued after the Purchaser receives the corresponding certificate from the Owner.

74. Punch List and Outstanding Work

74.1. The Contractor shall, in coordination with the Purchaser, prepare and update on a continuing basis during the period between completion of structure and final completion, punch lists (based on the preliminary punch list) of outstanding items requiring completion or rectification.

74.2. The Contractor shall rectify or complete all outstanding work or plant items to the standards specified in the Contract and according to the schedule set forth in the punch list. If the Contractor fails to commence or diligently proceed with such outstanding work as per the agreed schedule, the Purchaser may arrange for completion of the outstanding work. The reasonable costs incurred for such completion shall be certified by the Purchaser and deducted from the contract price or otherwise paid by the Contractor to the Purchaser.

74.3. The parties may mutually agree that any outstanding work items shall be carried out by the Purchaser or deleted from the punch list, subject to an agreement on the appropriate compensation or allowance to be paid or granted by the Contractor to the Purchaser in respect of such outstanding items.

75. Rectification/Correction and Replacement of faulty/defective/damaged work

75.1. The Employer may reject defective or unsatisfactory work or materials. The Contractor shall proceed immediately with the correction of rejected, defective, or unsatisfactory workmanship or materials and shall have all objectionable materials and defective work removed from the site (or any place used for storing materials for use on the work) and replaced.

76. Demobilization

76.1. Prior to handing over the site, the Contractor shall ensure the removal of all its belongings, materials, equipment, supplies, wastes, and any other property brought or generated at the site or work area.

76.2. The Contractor shall, as soon as reasonably practicable and in accordance with all applicable laws and regulations, remove or dispose of all debris, rubbish, and waste, taking all necessary measures to prevent any damage to the site or adjacent property.

76.3. Regarding labor and accommodation, the Contractor shall be fully responsible for the removal of all its workmen, laborers, and any temporary structures, hutments, sheds, or dwellings

erected for the execution of the works, ensuring complete clearance of the site prior to handover.

77. Contract Closure

77.1. Upon completion of all works in accordance with the scope and specifications of the Contract, the process for contract closure shall be initiated. The following key activities, as applicable, shall be undertaken to effect contract closure:

77.1.1. Completion of works and issuance of the Work Completion Certificate by the Purchaser.

77.1.2. Resolution and closure of all outstanding punch points.

77.1.3. Finalization and certification of measurements by the Engineer-in-Charge or the designated Engineering representative.

77.1.4. Joint final reconciliation of Free Issue Materials (FIM) between the Contractor and Purchaser.

77.1.5. Joint reconciliation and finalization of delay analysis, including Liquidated Damages (LD), if applicable.

77.1.6. Submission of No Demand Certificate by the Contractor.

77.1.7. Submission of Indemnity Bond by the Contractor.

77.1.8. Reconciliation and confirmation of the Contract Payment Register and associated accounts by both Contractor and Purchaser.

78. Patent Rights and Royalty

78.1. In the event that the Contractor, during the course of performing its obligations under this GCC, acquires, invents, or develops any proprietary knowledge, information, process, or invention which qualifies, or may qualify, as a trademark, copyright, patent, trade secret, geographical indication, or any other intellectual property right, the Bidder shall promptly disclose such creation to BRPL. All title, interest, and rights to such intellectual property shall vest exclusively in BRPL, and the Contractor shall execute all documents necessary to ensure BRPL's sole ownership without delay.

78.2. The Contractor warrants that, in performing its obligations, no intellectual property rights of any third party shall be infringed, whether by violation of statute, passing off, or otherwise. The Contractor shall bear sole responsibility for any infringement claims, and shall fully indemnify and hold BRPL harmless from and against any and all losses, damages, liabilities, costs, or expenses (including reasonable legal fees) incurred as a result of any such infringement. Any compensation, damages, or expenses paid by BRPL to third parties in connection with such infringement shall be recoverable in full from the Contractor.

79. Confidentiality/Secrecy

79.1. The Contractor shall not, without the Company's prior written consent, disseminate, publish, or otherwise utilize in any form of advertising, publicity, sales release, or media any photograph, reproduction, or description of the Works under this Contract, nor disclose the site details, dimensions, quantities, or other related information concerning the Works.

79.2. The Contractor, along with its employees and representatives, shall maintain strict confidentiality regarding all information encountered in the execution of the Contract, as detailed below.

79.2.1. Documents: All maps, plans, drawings, specifications, schemes, and other documents or information related to the Contract/Project, including any material supplied to the Bidder by BRPL for contract execution, shall be treated as confidential and remain the property of BRPL. Such documents shall be used solely for purposes of the Contract and shall not be disclosed or used for any other purpose. Disclosure

79.2.2. to third parties is permitted solely where such disclosure is necessary for the execution of the Work, and only upon the third party's execution of a confidentiality agreement acceptable to BRPL, explicitly committing to uphold confidentiality obligations equivalent to those set forth herein.

79.2.3. Geographical Data: Maps, layouts, site photographs, and regional imagery depicting installations of national or BRPL significance shall not be published, disclosed, or exported without BRPL's prior written approval. Any necessary disclosure to third parties shall be subject to confidentiality agreements satisfactory to BRPL, executed prior to disclosure.

79.2.4. Violation: In the event of any breach of these confidentiality provisions, the Contractor shall indemnify and hold the Company harmless from any loss, cost, damage, or claim (including claims asserted by third parties) arising as a result of such breach. Any actual or suspected data breach or cyber incident must be promptly notified to BRPL and investigated at the Contractor's expense.

79.3. Furthermore, the Bidder shall be liable for compensation or damages as determined by the competent authority of BRPL.

80. Progress Reports of Work Execution and Information

80.1. Throughout the manufacturing and erection stages of critical equipment under this Contract, the Contractor shall, at its own expense, submit periodic progress reports as reasonably required by the Purchaser. These reports shall include relevant supplementary materials such as charts, network diagrams, photographs, and test certificates. The format, size, and number of copies of such reports shall be specified by the Purchaser.

80.2. Quantitative progress reports shall refer to the project schedule in sufficient detail to enable the Purchaser to assess performance, schedule witness dates, and evaluate forecasts, including reports on key subcontracts, where applicable. Within seven (7) days after each report submission—and at other times as reasonably requested by the Purchaser—the Contractor and Purchaser shall meet to discuss progress.

80.3. Weekly progress reports shall include but not limited to:

80.3.1. Executive summary

80.3.2. Description of the work and services performed and goods and materials delivered and erected during the preceding week.

80.3.3. Necessary photographs of work done in the manufacturer's shop and erection site which shall be taken when and where indicated by the Purchaser. Photographs shall be approximately 100 x 125 mm in size including a margin of 5 mm side for fixing. Adequate numbers of photographs shall be submitted indicating various stages of manufacture and erection of critical items. Each photograph shall contain the date, the name of the Contractor and the title of the view taken.

80.3.4. Updated project schedule showing progress to the end of the week (as percentages completed of the Contractor's activities broken down into significant elements of the works), and the current schedule of activities and the targets for the next week.

80.3.5. Identification of areas with foreseeable problems which in the opinion of the contractor may affect the project schedule.

80.3.6. Such other information and supporting documentation as the Purchaser may require satisfying himself about the timely manufacture, delivery and erection of equipment as per contract.

80.4. The Purchaser shall advise the Contractor about the number of copies of progress reports and, where relevant, photographs he has to submit each week together with the names and addresses of persons (Communication Matrix) to whom they are to be sent. Purchaser will also advise the contractor regarding the format of the Monthly Progress report.

80.5. In addition to the above, the Contractor shall promptly furnish all reports, records, and information as may be requested by the Company, in a form and frequency specified by the Company. The Company retains the right to alter the format and requirements of such submissions, and the Contractor shall be bound to comply with any revised reporting obligations as communicated by the Company

81. Dispute Resolution & Arbitration

81.1. The Parties shall make all reasonable efforts to resolve amicably, through mutual discussions, any disputes or differences arising out of or in connection with this Contract. In the event that such disputes remain unresolved for thirty (30) days from the date either Party notifies the other in writing of the dispute, either Party may refer the matter to arbitration.

81.2. Arbitration shall be conducted by a tribunal comprising two arbitrators - one to be appointed by each Party. The two arbitrators thus appointed shall mutually select a third individual to act as the presiding arbitrator prior to entering upon reference, if and when required. The arbitration proceedings shall be undertaken in accordance with the provisions of the Indian Arbitration and Conciliation Act, 1996 and its 2015 and 2019 amendments. The seat and venue of arbitration shall be New Delhi, India. The language of all proceedings, documents, and communications shall be English. The arbitral process shall be completed within a maximum period of three (3) months from constitution of the arbitral tribunal.

81.3. Reference to negotiation and/or arbitration may proceed regardless of whether the Works have been completed, provided that the contractual obligations of both the Purchaser and the Contractor shall remain unaffected during pendency of arbitration. Under no circumstances shall the Contractor suspend execution of the Works, in whole or in part, on account of ongoing arbitration. Payments due to the Contractor shall continue to be made as per the terms of the Contract.

81.4. All disputes arising out of or in relation to this Contract that require recourse to judicial proceedings shall be subject to the exclusive jurisdiction of the courts at Delhi, India.

82. Termination Due To Contractors Default

82.1. The Purchaser shall have the right to terminate this Contract by providing the Contractor with seven (7) days' prior written notice if any of the following events occurs:

82.1.1. The Contractor fails to complete the execution of the Works within the approved schedule, terms, and conditions stipulated herein.

82.1.2. The Contractor commits an act of insolvency or is adjudged insolvent by a court of competent jurisdiction.

82.1.3. The Contractor abandons the Contract.

82.1.4. The Contractor fails to commence the Works or suspends the progress of the Works for an unreasonable period.

82.1.5. The Contractor fails to proceed with the Works with due diligence and fails to make satisfactory progress.

83. Remedy for Contractor's Default

83.1. If the quality of the Works performed by the Contractor fails to meet the contract requirements, the Purchaser shall have the right to demolish or reject such defective work and have it re-executed at the Contractor's risk and cost.

83.2. If the Contractor is unable to perform the Works in accordance with the agreed schedule and other contract provisions, the Purchaser may, after providing seven (7) days' written notice to the Contractor, have the Works rectified, completed, or carried out by an alternative agency at the Contractor's risk and cost.

84. Risk & Cost

84.1. If the Contractor fails to execute the Works as per the NIT specifications or as agreed in the Contract within the scheduled period, including any extensions granted, the Contract shall be terminated. BRPL reserves the right to complete the Works through alternative sources at the Contractor's risk and cost. Any additional expenditure incurred shall be debited to and recovered from the Contractor under the Contract.

85. Termination for convenience of Purchaser

85.1. The Purchaser may, at its sole discretion, terminate this Contract in whole or in part by providing the Contractor with thirty (30) days' prior written notice, including notice via email. The Purchaser shall pay the Contractor for all supplies and services rendered up to the effective date of termination, subject to submission of an appropriate invoice by the Contractor.

85.2. Upon receipt of the termination notice, the Contractor shall, within thirty (30) days or by the date specified in the notice:

85.2.1. Cease all further Work, except for such activities as may be necessary to protect and preserve completed portions of the Facilities or to leave the site in a safe and clean condition as directed by the Purchaser.

85.2.2. Terminate all subcontracts, except those which the Purchaser specifies will be assigned to it.

85.2.3. Remove all Contractor's equipment and personnel, including subcontractors' personnel, from the site and clear all debris, rubbish, and wreckage, leaving the site clean and safe.

85.2.4. Deliver to the Purchaser all completed portions of the Facilities as of the termination date.

85.2.5. To the extent permitted by law, assign to the Purchaser all rights, title, and benefits relating to the Facilities, Plant, Equipment, and subcontracts as at the termination date.

85.2.6. Deliver to the Purchaser all non-proprietary drawings, specifications, and other documentation prepared in connection with the Facilities as of the termination date.

85.3. In the event of such termination, the Purchaser shall pay the Contractor the following amounts, after deducting any claims the Purchaser may have under the Contract:

85.3.1. The contract price attributable to the completed parts of the Facilities as of the termination date.

85.3.2. Reasonable costs incurred by the Contractor for removal of equipment from the site and repatriation of personnel.

85.3.3. Pre-approved and reasonable costs for fulfilling bona fide obligations or commitments with third parties connected to the Contract that are not otherwise covered.

85.4. Payment as described above shall constitute the Contractor's sole and exclusive remedy for termination by the Purchaser under this clause. The Contractor hereby waives all other claims, including loss of profits or any other damages or expenses related to such termination.

85.5. The Contractor agrees that all claims for compensation must be fully substantiated with sufficient detail to allow evaluation by the Purchaser. All subcontracts shall be terminated except those assigned to the Purchaser pursuant to this clause.

86. Entire Agreement & Amendment

86.1. This Agreement constitutes the entire understanding between BRPL and the Contractor regarding the subject matter herein and supersedes all prior agreements, whether written or oral, that relate to such matters. Any modification, amendment, or alteration to this

Agreement shall be valid only if documented in writing and duly executed by authorized representatives of both BRPL and the Contractor.

87. Notice & Communication

87.1. Any notice or other formal communication under this Agreement shall be in writing, signed by or on behalf of the party issuing it, and shall be sent by registered post with acknowledgement due (A.D.) to the addresses of the Contractor or BRPL as stated herein, or to such other addresses as may be mutually agreed upon in writing by the Parties from time to time.

87.2. Notices and formal communications may also be transmitted via the official email addresses of the authorized representatives of the Contractor or BRPL. Such electronic communications shall be deemed duly delivered upon successful transmission and acknowledgement by the recipient.

87.3. All communications, correspondence, and documentation pertaining to the Purchase Order shall be directed strictly as specified in this Agreement.

88. Acceptance

88.1. The Contractor hereby acknowledges and confirms review of BRPL's Policy on legal and ethical standards for contractors, as set forth in the "Vendor/Contractor Code of Conduct" displayed on BRPL's official website (www.bsesdelhi.com). The Contractor agrees that the Contractor Code of Conduct shall form an integral part of the Contract, Purchase Order (PO), or Work Order (WO). The Contractor undertakes to fully comply with the Vemdor/Contractor Code of Conduct, and acknowledges that any violation shall constitute a breach of the Contract/PO/WO. In the event of such breach, whether or not it causes any actual loss or damage, BRPL reserves the right to recover any loss or damage from the Contractor. The Contractor shall indemnify and hold harmless BRPL against any claims, litigation, or other consequences arising out of any breach or violation of the Contractor Code of Conduct by the Contractor, its officers, agents, or representatives.

88.2. Acceptance of the Contract includes acceptance of all terms and conditions referenced therein, including technical specifications, drawings, general conditions, detailed scope of work, and any equipment drawings provided to the Contractor.

88.3. The contractual obligations of BRPL and the Contractor are strictly limited to the terms and conditions set forth in the Contract. No amendment, modification, or alteration to the Contract shall be valid unless made in writing and signed by authorized representatives of both Parties.

88.4. All services and supplies under this Contract are expected to be fully aligned with BRPL's Vision, Mission, and Values. These can be reviewed at https://www.bsesdelhi.com/web/BRPL/about-bses.

BSES

BSES RAJDHANI POWER LIMITED

ENVIRONMENT, HEALTH & SAFETY CONDITIONS FOR SCHEME BASED CONTRACTS/ SERVICE LEVEL AGREEMENTS INVOLVING SITE WORK

1. General Requirements

1.1 The contractor shall ensure that safety of all the workers, materials, Installation and equipments belonging to him or to others and working at the site is ensured through effective and practicable safety management systems.

1.2 The contractor shall be responsible for compliance to provisions of all safety requirements under various notices, acts, rules and relevant applicable legislations.

1.3 The contractors shall comply with all health & safety requirements as deemed necessary by BRPL from time to time.

1.4 Works shall be carried out by the contractor after taking necessary "Permit to work". Also the work shall not be carried out without use of Protective equipments like shoes, safety belts, helmets etc. adhering to safety compliance.

1.5 All the equipments being used shall be timely calibrated.

2. QEHS Policy

The contractor as per requirement of CEA Measures Relating to Safety and Electric Supply Regulations, 2010 shall follow the Quality, Environment, Health & Safety Policy of BRPL. The contractor shall implement quality, health & safety management systems in accordance to BRPL EHS policy and ensure that intentions of such policy are met.

3. Health & Safety Plan

3.1 The contractor shall document a detailed and comprehensive Contract specific health & safety plan incorporating HIRA (Hazard Identification & Risk Analysis) to BRPL. This plan shall necessarily include detailed policies, procedures, method statement for each activity to be performed and regulations which, when implemented, will ensure compliance of the contract provisions stated herewith.

3.2 The contractor shall provide health & safety plan for such activities required to be carried out under the awarded contract as deemed necessary by BRPL.

4. EHS Organization & Responsibility

4.1 The contractor supervisor will play the role of safety supervisor. The safety supervisor shall hold a diploma degree from a recognized institute or university as per CEA Regulations, 2010. Also simultaneously contractor has to ensure their competency in safety or EHS with 40 hours training from reputed agency (like RLI/Allied Boston/ National Safety Council)or trainer, which should be verified earlier by BRPL safety department accordingly. 4.2 The training certificate should not be more than one year old.

4.3 Apart from above, as an owner of the company the contractor & their other key persons are also responsible for safety compliance and related issues.

5. First Day at Work –Induction Training and Issuance of ID-Card

5.1 The contractor shall ensure that all his workers have under gone the safety induction and have been issued with a valid ID card prior to start work at BRPL site.

5.2 All contractor workers shall undergo above as per the BRPL site specific procedure issued from time to time.

5.3 The contractor shall ensure that no worker is in any O&M activities until the valid ID card is issued and the same is available by each worker at site including that of sub contractor(s).

5.4 In case any worker lost the ID card issued to him, the contractor shall ensure that such incidences are promptly reported to BRPL and duplicate or new ID card is issued immediately after completing formalities as deemed necessary by BRPL.

6. Provision of Safe Working Conditions

6.1 Proper barricading shall be created during height work, excavation/civil work, cable laying work, working on pole, etc. During civil/excavation work usage of safety net shall be ensured. Dimensions of barricading while cable laying work- Height- 2 mtr, Length- 1.5 mtr. There shall not be any gap in between two barricades. LED Bacon light shall be placed at 1st and every 4th barricade. However, while working

on pole during supply maintenance work there should be a barricading cone and caution tape . In narrow lanes, where proper barricading as per rules is not possible, use barricading as per the approval of respective safety circle head in writing and copy forwarded to safety and uploading in QMS.

6.2 PPE' REQUIREMENT

6.2.1 The contractor shall ensure all the required PPEs given in clause 6.2 and shall allow their workers to start work at site only after proper verification of adequacy of safety gears/PPE required for the specific job at site by the Safety personnel/Site Engineer of BRPL. Any other PPE apart from the list mentioned as deemed necessary as per the work shall also be provided like boots during excavation work, etc.

Contractor has to ensure the quantity and quality of PPEs during procurement and continuous usage of following PPE's by his staff.

S.NO.	NAME OF THE PPEs	LINEMAN / FITTER/SKILLED	HELPER/UNSKILLED	SUPERVISOR
1	SAFETY HELMET	✓	✓	✓
2	SAFETY FULL BODY HARNESS (POSITIONING BELT)	✓	X	X
3	ELECTRICAL HAND GLOVES (for electrical works)	✓	✓	X
4	SAFETY SHOES	✓	✓	✓
5	SAFETY GOGGLES	✓	✓	✓
6	REFLECTIVE JACKET	✓	✓	✓

6.2.2 Contractor has to ensure for proper procurement and distribution of required PPE's among their workers with receiving in attached format (Annexure- 1) which will be verified by the safety department during inspection.

6.2.3 If any of the contractor staff found without PPEs, the said PPE's will be issued to them from BRPL store with immediate effect. And the 20% extra amount with procurement cost will be recovered from their next monthly bill cycle.

Note: PPEs shall strictly be as per the brand mentioned in clause 6.2.4

6.2.4 **Technical Specification of the PPEs**

6.2.4.1. Safety Shoes – With Composite / Fiber toes (CE approved / IS 15298) – Mandatory for all personnel working at BRPL O&M. The safety shoes shall meet the following features:

1. Electric Shock Resistant Sole
2. Impact Resistant
3. Scrap/Heat Resistant
4. Slip Resistant
5. Oil and Acid Resistant
6. Rubber PU Sole
7. Anti puncture

Lead MAKE: BATA/HONEYWELL/KARAM

6.2.4.2 Safety Helmets: (IS 2925 - 1984 or DGMS) with chin strap – Mandatory for all personnel working at BRPL O&M. The specification of safety helmet shall be as given below:
V-GARD HDPE Yellow With 4 Point Fas Trac Ratchet Suspension

Shell Material	UV stabilized HDPE, Non vented
Suspension	• With 4 Point Fas Trac Ratchet Suspension sewn headband • Textile straps made from polyester Suspension • point fixing: good positioning, ...stability, better air circulation due to ...limited contact areas with the head • Easy clean sweatband
Size	52-62 cm
Accessory slot	Standard 30 mm with removable HDPE dead plugs suitable to leak proof fitting
Approvals	ANSI/ IEC Z89.1 Class E (electrical)
Additional	Low temperature -10°C (acc. to GB2811), High temperature +50°C
Colours	Yellow
weight	360 g

Lead MAKE: 3M / KARAM / UFS

6.2.4.3 Full Body positioning Harness: (CE approved / IS 3521 / EN 361 / EN 355) – Shall be used while work is in progress at height more than 1.8 meter or where from a person may fall and get injured. The specification of the Full body harness shall be as given below:

Anchorage	Adjustable two chest attachment D-rings and A dorsal attachment D-ring
Adaptability	Adjustable shoulder and thigh straps
Convenience	Shoulder and thigh straps differentiated by a dual color scheme.
Ergonomics	Idealy. Positioned sit strap for extended comfort.
Size	Standard
weight	1200GMS
ENERGY ABSORBING FORKED LANYARDS :	
Spec.	44mm wide polyamide webbing.
Length	1.5 Meter

There should not be any metallic part in the full body harness.

Lead MAKE: KARAM /LIFEGEAR/UFS/HONEYWELL

6.2.4.4 Flex Chem Full View Safety Goggles – Shall be used to protect workers eyes from foreign materials and flying particles. Mandatory for all personnel working at BRPL O&M. Safety goggles shall meet the following feature:

1. Acetate lens for special applications requiring superior chemical resistance.
2. Industrial version of tough and popular first responder goggles.
3. SoftFlex low profile frosted frame for increased comfort.
4. Comfortable headband with length adjustment.
5. Indirect venting for comfortable, long lasting wear can be worn with safety helmets and over prescription spectacles.
6. Sightgard + premium anti-fog coating (EN 166 "N") with good anti- scratch properties.

Technical Specification:

Weight	95g.
Lens thickness	1.0mm
Overall width	173mm
Overall length	90mm
Bridge	47.6mm
Lens base	5.5 curve
Lens size	86.1mm verticle, 174mm diagonal
Headband	Adjustable length at max.440mm(long enough to fit together with helmets)
Material & colors	
Lens	Acetate clear, coating, Sightgard + anti-fog according to EN 166 "N" & anti scratch.
Body	PVC smoke
Headband holder	Nylon
Headband	Adjustable grey elastic fixed on frame side parts
Marking / Approvals	
Standard number	EN 166
Frame marking	MSA EN 166 34-FT CE
Lens marking	2C-1.2 MSA 1 FT N CE
Filter class	2C (Ultra violet radiation with enhanced color recognition)
Scale number	1.2: luminous trasmittance-89%
Optical class	1 (best class, for permanent wear)
Mechanical resistance	F (low energy impact 45m/s) T (at extreme temperature -5 to $+55^0$ C)
Resistance to	N(distorted vision due to lens fogging)
UV filter	99.9%
Ordering information	10145578-FlexiChem Sightgard + clear , 6x

Lead MAKE: MSA / UVEX/ UFS/3M/KARAM

6.2.4.5 Electrical Insulating Hand Gloves – Shall be used to prevent electric shock based upon the hazards/risks involved in a particular activity. Safety goggles shall meet the following features:

- Breakthrough manufacturing process for exception dry grip.
- Soft and flexible for enhanced tactility, high dexterity and wearer comfort.
- Ergonomic design featuring tapered fingers to reduce hand fatigue.
- Relaxed wrist for easy on/off.

	For LT work	**For HT work**
Length	360mm	360mm
Class	2	0
Thickness	3.6mm	1mm
Proof test voltage	20000	5000
Maximum use voltage	11000	1000

Tensile strength	>16mpa[Mega Pascal]
Puncture resistance	>18N/mm [Newton per mili meter]
Elongation at break	>600% [Stretching length]
Tension set	<15%

- It should be resistant to oil, acid, ultra violet rays and very low temperature.
- Each pair of glove should be marked with class, category, month & year of manufacturing, CE logo, batch no. and certified laboratory no.
- EN certified to electrical and thermal hazards,
- EN certified to thermal & electrical hazards to confirm EN 60-903,
- EN certified to mechanical hazard to EN-388

Lead MAKE: Honeywell / ANSELL/CATU

6.2.4.6 Arc Protection Face Shield

a) ATPV value is 10 cal/cm2
b) It shall have a slotted hard hat and chin guard
c) Visible light transmission (VLT) shall be 70%
d) It should have anti fog lens
e) It should have a provision for replacement of lens and brackets.
f) It should cover the complete face and the complete neck region.
g) It must not hinder the work. Must be comfortable for the height jobs as well as in the ground.
h) Carry bag for the kit.

Lead MAKE: Oberon/Honeywell

6.2.4.7 Certificates required for all PPEs:

1. Manufacturer Certificate
2. Test Certificate
3. Authorization of Dealership/Distribution ship

7. Integrated Management System & Audits

7.1 The Contractor shall work in the framework of Integrated Management System (IMS) and shall maintain documentation as prescribed in the IMS Manual of BRPL. IMS Manual can be obtained directly from site engineer/Division Head/Respective Head.

7.2 All contractors during their currency of contract shall strive to continuously improve and demonstrate strict compliance to ISO 9001, 14001 & 45001 standards of BRPL.

7.3 To verify compliance and to continually improve the management system, all contractors shall be subjected to both internal & external audits.

8. Medical Examination

8.1 The contractor shall arrange a medical examination of all his employees including his sub-contractor employees like lineman, ALM, supervisor, Fitter, welders, gas cutters, drivers and all the workers supposed to work at height (and any other trade specified deemed necessary by BRPL at the time of deployment then annually) before employing, after illness or injury, if it appears that the illness or injury might have affected his fitness and, thereafter, once in every year as per the provisions of applicable laws or as prescribed by BRPL with proper record.

8.2 Records of medical examination as described above shall be maintained at the contractor premises
8.3 No person about whom the Contractor knows or has reason to believe that he is a deaf or he has a defective vision or he has a tendency to giddiness shall be required or allowed to work in any O&M operation or other construction work which is likely to involve a risk of any accident either to the worker himself or to any other person.

BSES

9. Working at Height

9.1 The Contractor shall ensure that all works carried out at a height of 2 Meter or more shall only be started after obtaining a permit to work at height, which shall be issued as per the procedure of BRPL by authorized personnel.
9.2 The contractor shall ensure that all control measures mentioned and agreed through above work permit or as deemed necessary by BRPL are enforced and complied all the time during activities carried out at height.
9.3 Safety full body harness and ladder along with the required PPEs shall be used during height work.
9.4 Barricading cone and tape shall be used along with creation of proper safety zone.
9.5 Proper scaffolds and/or temporary work platforms shall be provided for working at height at elevations 1.5 meters or more where no permanent work platform is available to work safely. The elevated work platforms shall have guardrails and provided with ladders for access/egress. Ladders shall not be used as work platforms.
9.6 Whenever it is required to carry out work at height where scaffolding cannot be provided, use of safety net is must. All safety net systems shall meet the requirements of Indian Standard (IS: 5175).
9.7 No working at height shall be carried out without supervision.

10. Reporting of Near Miss/ Incidents / Dangerous Occurrences

10.1 In case of any incident/ accident occurs during the O&M activities undertaken by the Contractor thereby causing a dangerous occurrence or near miss or any minor or major or fatal injury to his employees due to any reason, whatsoever, it shall be sole responsibility of the Contractor to promptly inform the same to Department Head in prescribed form and also to all authorities envisaged under the applicable laws.

11. Suspension of Work

11.1 BRPL shall have the right at its sole discretion to suspend the work till compliance of safety norms, if in its opinion the work is being carried out in such a way that it may cause accidents and endanger the safety of the persons and / or property, and / or equipments.
11.2 In such cases, the contractor shall be informed in writing about the nature of hazards and possible injury /accident and he shall comply to remove all shortcomings promptly. Decision of BRPL shall be conclusive and binding on the Contractor in such aspects.
11.3 The contractor shall not be entitled to damages / compensation for suspending of work due to safety reasons and the period of such stoppage of work will not be taken as an extension of time for completion of the facilities as per the work order and will not be the ground for wavier of levy of liquidated damages.
11.4 The contractor shall follow and comply with all safety Rules of BRPL, relevant provisions of applicable laws pertaining to the safety of workmen, employees plant and equipment as may be prescribed from time to time without any demur, protest or contest or reservation. In case of any nonconformity between statutory requirement and safety rules of the BRPL referred above, the latter shall be binding on the contractor unless the statutory provisions are more stringent.

12. OHS Appreciation Policy

12.1 If the contractor observes all the safety rules and codes, statutory laws and rules during the period of the contract awarded by the BRPL and no accident occurs then BRPL may consider the performance of the contractor and safety score card will be prepared. The best contractor will be appreciated by suitable "SAFETY AWARD" as per scheme as may be announced separately from time to time.

13 Guidelines for Penalty Policy Implementation

13.1 Total penalty shall be calculated by multiplying the number of safety violations and the penalty amount specified for such violations in Appendix - 1. (Example – If at first offence persons are found working without safety helmet at 3 locations, the penalty would be 3X2000 = Rs.6000/-)

13.2 The amount of penalty can be increased or decreased based upon the seriousness of safety violations. The decision of recommending authority shall be final one.

13.3 Recommending authority shall send his factual observations to Department Head and Safety Head who in turn shall either reject or approve it. If approved, he shall send it to Finance & Accounts for execution. Finance Accounts shall execute the penalty and confirm the same & shall send it back to Department Head and Safety Head.

13.4 Recommending Authority means the Department Head, HODs, Site Safety officer / Supervisor, representatives from OHS and other personnel authorized jointly by O&M.

13.5 Penalties will be imposed for non-documentation and non-compliance of EHS related requirements/documents mentioned in the contract. The contractor shall maintain all the mentioned documentation at his premises.

13.6 Safety Head may impose penalty for serious violations directly.

13.7 All penalties shall be imposed directly on the concerned contractors. No penalty shall be imposed on individuals.

BSES

Appendix – 1

Penalty Policy on Safety Violation

Class	Type of Offense	Penalty Detail	Execution Channel
A	Not Wearing Safety Helmets Safety shoes/ Safety Goggles / Electrical insulating hand gloves/ reflective jacket/Not using (electrically) safe tools and equipments. (Poor quality or damaged item means noncompliance)	# First Offence - Warning Note & Rs.2000/- # Second Offence - Warning Note & Fine of Rs.5000/- # Third Offence- Action for termination of contract & Fine of Rs.15000/-	Recommendation by OHS-Representative/Department Head Approval by Safety Head Deduction by Finance & Account
B	Not wearing Full Body Harness/fall arresters while working at a height more than 1.8 meter or where from a person may fall. Not using Safety Net to arrest falling objects and personnel. Not using Arc Protection Face Shield /proper ladder. Not using barricading cone and tape. (Poor quality or damaged item means noncompliance)	# First Offence -Warning Note & Fine of Rs.5000/- # Second Offence - Warning Note for dismissal and a Fine of Rs.10000/- # Third Offense - -Action for termination of contract and a fine of Rs.25000/-	Recommendation by OHS-Representative/Department Head Approval by Safety Head Deduction by Finance & Account
C	Any other unsafe work practices or condition which is considered having potential for fatality or injury.	# First Offence - Warning Note & Fine of Rs.10000/- # Second Offence - Action for termination of contract and fine of Rs.20000/-.	Recommendation by OHS-Representative/Department Head Approval by Safety Head Deduction by Finance & Account

Notes:

If there are 03 violations by an individual employee, his services will be terminated.
If there are 03 violations in one quarter under any category, will be recommended for termination of contract order.

BSES

Appendix – 2

Penalty Policy on non- submission of EHS related requirements

Record of following EHS related requirements shall be maintained at contractor's premises.		
Requirement	Penalty Detail	Execution Channel
1. Contract specific health & safety plan and HIRA (Hazard Identification & Risk Analysis) 2. Safety supervisor training records on EHS (40 hrs training) 3. Bills/challan of PPE's along with test certificates (if procured by the contractor) 4. PPE's receipt by worker (as per Annexure #1) 5. Medical examination record of workers 6. ID card of workers 7. Calibration Certificates of equipments	Warning Note & a Consolidated Fine of Rs.5000/- on non-availability of proof of any of these mentioned 7 types of documents	Recommendation by OHS-Representative Approval by Safety Head Deduction by Finance & Account

BSES

BSES RAJDHANI POWER LIMITED

Annexure-1

Format for PPE's Receipt by workers

Name of Site ----------

Division----------

Name of Contractor ----------

S. NO.	NAME	DESI.	Safety Helmet	Electrical Insulating Hand gloves	Full Body Harness	Safety Shoes	Safety Goggle	Reflective Jacket	SIGNATURE

Signature of Contractor / Date…….

BSES

APPENDIX II

ANNEXURE – 2.01

FORMAT OF ADVANCE BANK GUARANTEE
(To be executed on a Non-Judicial Stamp Paper of appropriate value)

This Guarantee made at _____ this [___] day of [_____] 20XX

1. WHEREAS M/s BSES Rajdhani Power Limited, a Company incorporated under the provisions of Companies Act, 2013 having its Registered Office at BSES Bhawan, Nehru Place, Delhi 110019, India hereinafter referred to as the " Owner ", (which expression shall unless repugnant to the context or meaning thereof include its successors, administrators, executors and assigns).

2. AND WHEREAS the Owner has entered into a contract for _____(Please specify the nature of contract here) vide Contract No. _____dated _____(hereinafter referred to as the "Contract") with M/s._____, (hereinafter referred to as "the Contractor", which expression shall unless repugnant to the context or meaning thereof be deemed to mean and include each of their respective successors and assigns) for providing services on the terms and conditions as more particularly detailed therein.

3. AND WHEREAS as per clause ____of Conditions of Contract, the Contractors are obliged to provide to the Owners an unconditional bank guarantee for an amount equivalent to ten percent (10%) of the total Contract Value for the timely completion and faithful and successful execution of the Contract from **[_____]** *pl. specify the name of Bank)* having its head/registered office at **[_____]** through its branch in _____*(pl. specify the name of Branch through which B.G is issued)* hereinafter referred to as "the Bank", (which expression shall unless it be repugnant to the context or meaning thereof be deemed to include its successors and permitted assigns).

4. NOW THEREFORE, in consideration inter alia of the Owner granting the Contractors the Contract, the Bank hereby unconditionally and irrevocably guarantees and undertakes, on a written demand, to immediately pay to the Owner any amount so demanded (by way of one or more claims) not exceeding in the aggregate [Rs.].....*(in words)* without any demur, reservation, contest or protest and/or without reference to the Contractor and without the Owner needing to provide or show to the Bank, grounds or reasons or give any justification for such demand for the sum/s demanded.

5. The decision of the Owner to invoke this Guarantee and as to whether the Contractor has not performed its obligations under the Contract shall be binding on the Bank. The Bank acknowledges that any such demand by the Owner of the amounts payable by the Bank to the Owner shall be final, binding and conclusive evidence in respect of the amounts payable by the Contractor to the Owner. Any such demand made by the Owner on the Bank shall be conclusive and binding, notwithstanding any difference between the Owner and the Contractor or any dispute raised, invoked, threatened or pending before any court, tribunal, arbitrator or any other authority.

6. The Bank also agrees that the Owner at its option shall be entitled to enforce this Guarantee against the Bank as a principal debtor without proceeding against the Contractors notwithstanding any other security or other guarantee that the Owner may have in relation to the Contractor's liabilities.

7. The Bank hereby waives the necessity for the Owner first demanding the aforesaid amounts or any part thereof from the Contractors before making payment to the Owner and further also waives any right the Bank may have of first requiring the Owner to use its legal remedies against the Contractors, before presenting any written demand to the Bank for payment under this Guarantee.

8. The Bank's obligations under this Guarantee shall not be reduced by reason of any partial performance of the Contract. The Bank's obligations shall not be reduced by any failure by the Owner to timely pay or perform any of its obligations under the Contract.

9. The Bank further unconditionally and unequivocally agrees with the Owner that the Owner shall be at liberty, without the Bank's consent and without affecting in any manner its rights and the Bank's obligation under this Guarantee, from time to time, to:

   (i) vary and/or modify any of the terms and conditions of the Contract;

   (ii) Forebear or enforce any of the rights exercisable by the Owner against the Contractors under the terms and conditions of the Contract; or

   (iii) Extend and/or postpone the time for performance of the obligations of the Contractors under the Contract;

   and the Bank shall not be relieved from its liability by reason of any such act or omission on the part of the Owner or any indulgence shown by the Owner to the Contractors or any other reason whatsoever which under the law relating to sureties would, but for this provision, have the effect of relieving the Bank of its obligations under this Guarantee.

10. This Guarantee shall be a continuing bank guarantee and shall not be discharged by any change in the constitution or composition of the Contractors, and this Guarantee shall not be affected or discharged by the liquidation, winding-up, bankruptcy, reorganization, dissolution or insolvency of the Contractors or any of them or any other circumstances whatsoever.

11. This Guarantee shall be in addition to and not in substitution or in derogation of any other security held by the Owner to secure the performance of the obligations of the Contractors under the Contract.

12. NOTWITHSTANDING anything herein above contained, the liability of the BANK under this Guarantee shall be restricted to _____*(insert an amount equal to ten percent (10%) of the Contract Value)* and this Guarantee shall be valid and enforceable and expire on _____*(pl. specify date)* or unless a suit or action to enforce a claim under this Guarantee is filed against the Bank on or before the date of expiry.

13. On termination of this Guarantee, all rights under the said Guarantee shall be forfeited and the Bank shall be relieved and discharged from all liabilities hereunder.

14. The Bank undertakes not to revoke this Guarantee during its validity except with the prior written consent of the Owner and agrees that any change in the constitution of the Bank or the Contractors shall not discharge our liability hereunder.

15. This Guarantee shall be governed by the laws of India. Any suit, action, or other proceeding arising out of, connected with, or related to this Guarantee or the subject matter hereof shall be subject to the exclusive jurisdiction of the courts of **Delhi,** India.

Dated this …… day of ……. …20XX at …….

(Signature)

……
(Name)
……
(Designation with Bank Stamp)
Attorney as per
Power of Attorney No.....

Date.....

BSES

ANNEXURE – 2.02

FORMAT OF PERFORMANCE BANK GUARANTEE
(To be executed on a Non-Judicial Stamp Paper of appropriate value)

This Guarantee made at _____ this [___] day of [_____] 20XX

1. WHEREAS M/s BSES Rajdhani Power Limited, a Company incorporated under the provisions of Companies Act, 2013 having its Registered Office at BSES Bhawan, Nehru Place, Delhi 110019, India hereinafter referred to as the " Owner ", (which expression shall unless repugnant to the context or meaning thereof include its successors, administrators, executors and assigns).

2. AND WHEREAS the Owner has entered into a contract for _____(Please specify the nature of contract here) vide Contract No. _____dated _____(hereinafter referred to as the "Contract") with M/s._____, (hereinafter referred to as "the Contractor", which expression shall unless repugnant to the context or meaning thereof be deemed to mean and include each of their respective successors and assigns) for providing services on the terms and conditions as more particularly detailed therein.

3. AND WHEREAS as per clause ____of Conditions of Contract, the Contractors are obliged to provide to the Owners an unconditional bank guarantee for an amount equivalent to ten percent (10%) of the total Contract Value for the timely completion and faithful and successful execution of the Contract from **[_____]** *pl. specify the name of Bank)* having its head/registered office at **[_____]** through its branch in _____*(pl. specify the name of Branch through which B.G is issued)* hereinafter referred to as "the Bank", (which expression shall unless it be repugnant to the context or meaning thereof be deemed to include its successors and permitted assigns).

4. NOW THEREFORE, in consideration inter alia of the Owner granting the Contractors the Contract, the Bank hereby unconditionally and irrevocably guarantees and undertakes, on a written demand, to immediately pay to the Owner any amount so demanded (by way of one or more claims) not exceeding in the aggregate [Rs.].....*(in words)* without any demur, reservation, contest or protest and/or without reference to the Contractor and without the Owner needing to provide or show to the Bank, grounds or reasons or give any justification for such demand for the sum/s demanded.

5. The decision of the Owner to invoke this Guarantee and as to whether the Contractor has not performed its obligations under the Contract shall be binding on the Bank. The Bank acknowledges that any such demand by the Owner of the amounts payable by the Bank to the Owner shall be final, binding and conclusive evidence in respect of the amounts payable by the

Contractor to the Owner. Any such demand made by the Owner on the Bank shall be conclusive and binding, notwithstanding any difference between the Owner and the Contractor or any dispute raised, invoked, threatened or pending before any court, tribunal, arbitrator or any other authority.

6. The Bank also agrees that the Owner at its option shall be entitled to enforce this Guarantee against the Bank as a principal debtor without proceeding against the Contractors notwithstanding any other security or other guarantee that the Owner may have in relation to the Contractor's liabilities.

7. The Bank hereby waives the necessity for the Owner first demanding the aforesaid amounts or any part thereof from the Contractors before making payment to the Owner and further also waives any right the Bank may have of first requiring the Owner to use its legal remedies against the Contractors, before presenting any written demand to the Bank for payment under this Guarantee.

8. The Bank's obligations under this Guarantee shall not be reduced by reason of any partial performance of the Contract. The Bank's obligations shall not be reduced by any failure by the Owner to timely pay or perform any of its obligations under the Contract.

9. The Bank further unconditionally and unequivocally agrees with the Owner that the Owner shall be at liberty, without the Bank's consent and without affecting in any manner its rights and the Bank's obligation under this Guarantee, from time to time, to:

(i) vary and/or modify any of the terms and conditions of the Contract;

(ii) Forebear or enforce any of the rights exercisable by the Owner against the Contractors under the terms and conditions of the Contract; or

(iii) Extend and/or postpone the time for performance of the obligations of the Contractors under the Contract;

and the Bank shall not be relieved from its liability by reason of any such act or omission on the part of the Owner or any indulgence shown by the Owner to the Contractors or any other reason whatsoever which under the law relating to sureties would, but for this provision, have the effect of relieving the Bank of its obligations under this Guarantee.

10. This Guarantee shall be a continuing bank guarantee and shall not be discharged by any change in the constitution or composition of the Contractors, and this Guarantee shall not be affected or discharged by the liquidation, winding-up, bankruptcy, reorganization, dissolution or insolvency of the Contractors or any of them or any other circumstances whatsoever.

11. This Guarantee shall be in addition to and not in substitution or in derogation of any other security held by the Owner to secure the performance of the obligations of the Contractors under the Contract.

12. NOTWITHSTANDING anything herein above contained, the liability of the BANK under this Guarantee shall be restricted to _____*(insert an amount equal to ten percent (10%) of the Contract Value)* and this Guarantee shall be valid and enforceable and expire on _____*(pl. specify date)* or unless a suit or action to enforce a claim under this Guarantee is filed against the Bank on or before the date of expiry.

13. On termination of this Guarantee, all rights under the said Guarantee shall be forfeited and the Bank shall be relieved and discharged from all liabilities hereunder.

14. The Bank undertakes not to revoke this Guarantee during its validity except with the prior written consent of the Owner and agrees that any change in the constitution of the Bank or the Contractors shall not discharge our liability hereunder.

15. This Guarantee shall be governed by the laws of India. Any suit, action, or other proceeding arising out of, connected with, or related to this Guarantee or the subject matter hereof shall be subject to the exclusive jurisdiction of the courts of **Delhi,** India.

Dated this …… day of ……. …20XX at ……..

(Signature)

……
(Name)
……
(Designation with Bank Stamp)
Attorney as per
Power of Attorney No.....

Date.....

BSES

ANNEXURE – 2.03

BRPL BANK DETAILS WITH IFSC CODE:

1. Name of the Bank:	State Bank of India,
2. Branch Name & Full Address:	IFB, 1, Tolstoy Marg, Jawahar Vyapar Bhawan, New Delhi 110001
3. Beneficiary Name:	BSES Rajdhani Power Limited
4. Bank Account No:	40214820999
5. IFSC Code:	SBIN0009601

BSES

ANNEXURE – 2.04

FORMAT OF WARRANTY/GUARANTEE CERTIFICATE

BSES RAJDHANI POWER LIMITED BSES Bhawan, Nehru Place, New Delhi -110019.

Ref. Purchase Order No. :

Dear Sir,

We hereby confirm that the.....dispatched to BSES RAJDHANI POWER LTD vide invoice no..... DT.....is exactly of the same nature and description as per above mentioned Purchase Order.

We further confirm that we will replace/repair our.....free of cost if any manufacturing defect during.....months from the date of dispatch of material or.....months from the date of commissioning whichever is earlier.

Bidder Name & Signature

BSES

ANNEXURE – 2.05

GST UNDERTAKING

The Bidder shall give an undertaking in the following words on each invoice in the absence of which tax payment as on the Bidder's invoice may be withheld.

"The tax component as mentioned in the invoice shall be deposited with the GST Department as per law by way of actual payment or by way of legal set off as per law. The turnover billed shall be duly declared in my GST returns a copy of which shall be filed with the Purchaser. Should the input tax credit to the Purchaser be denied by way of any lapse on the part of the Bidder, the same shall be paid on demand and in any case the Purchaser is authorized to deduct the tax equivalent amount from the amount payable to the Bidder"

BSES

ANNEXURE – 2.06

FORMAT OF WARRANTY / DEFECT LIABILITY PERIOD – SERVICES

Performance requirements of the works completed is as per detailed specifications and standards specified and to be adhered to strictly. In-case of deficiency, the same is to be rectified / redone to meet the specifications by the contractor within stipulated schedule or any extension thereof. The Contractor shall be liable to rectify all defects except those arising out of normal wear and tear, in the works done by the Contractor under this contract, or from any act or omission of the contractors for a period of 24 months will depend on individual contract period package to package from the date of Handing over the works to the Employer / Owner.

Bidders Name & Signature

BSES

ANNEXURE – 2.07

SUMMARY OF COMMERCIAL TERMS AND CONDITIONS

SL NO	PARTICULARS	CLAUSE AS PER TENDER	BIDDER'S CONFIRMATION
1	Validity of Bid	180 days from the date of submission of the bid	
2	Price Basis	**"Firm"**, FOR Delhi store(s)/site(s) basis. Prices shall be inclusive of all taxes & duties, freight up to Delhi store(s)/site(s).	
3	Unloading	Unloading at stores/sites shall be in the Contractor's scope	
4	Insurances	Insurances in Bidder's scope	
5	Payment Terms - Package A	**Supply:** i. 5% of the total supply contract price shall be paid as initial interest free advance on fulfillment against 1) acceptance of LOI/PO, 2) submission of BG, 3) Submission of Contract Performance Bank Guarantee i. 5% of the total supply contract price shall be paid as interest free advance against submission of BG, approval of drawings under Category-1 of major drawings, etc. ii. 60% prorata of supply value item wise shall be payable against R/A bills for supply of equipments and materials within 30 days against receipt & acceptance of material at site iii. 20% prorata on account of supply value of the actual executed value after installation/erection of material duly certified by BRPL Project-in- charge. iv. Balance 10% on account of supply value of the actual executed value shall be paid in 30 days after completion of successful acceptance testing, commissioning and handing over of complete systems duly certified by BRPL Engineer-in-Charge **Services:** ii. 10% of the total services contract price shall be paid as initial interest free advance on fulfillment against 1) acceptance of LOI/PO, 2) submission of BG, 3) Submission of Contract Performance Bank Guarantee iii. 60% prorata of total services value shall be payable against R/A bills payable within 30 days after completion duly certified by Engineer in charge. iv. 20% prorata of total services value shall be payable against R/A bills payable within 30 days after completion of successful acceptance testing, commissioning and handing over of complete systems duly certified by BRPL Engineer-in-Charge specified in the tender. v. Balance 10% on account of total services value of the actual executed value shall be paid in 30 days after completion of successful acceptance testing, commissioning and handing over of complete systems duly certified by BRPL Engineer-in-Charge	
6	Payment Terms - Package B	**Supply:** i. 70% prorata of supply value item wise shall be payable against R/A bills for supply of equipments and materials within 30 days against receipt & acceptance of material at site and submission ii. 20% prorata on account of supply value of the actual executed value after installation/erection of material duly certified by BRPL Project-in- charge.	

BSES

		iii. Balance 10% on account of supply value of the actual executed value shall be paid in 30 days after completion of successful acceptance testing, commissioning and handing over of complete systems duly certified by BRPL Engineer-in-Charge **Services:** i. 90% pro-rata payment of total installation value of the actual executed value shall be paid in 30 days on receipt made progressively on submission of your running invoices on Monthly basis duly certified by our Engineer In charge ii. Balance 10% on account of total installation value of the actual executed value payable shall be paid in 30 days after completion of successful acceptance testing, commissioning and handing over of complete systems duly certified by BRPL Engineer-in-Charge.	
7	Project Schedule	Transmittal Approval Documents (GTP/Drawings/QAP/etc.) are to be submitted within 30 days from the date of LOI/LOA/PO or as per the approved Project Schedule to the concerned officials in BRPL for approval. BRPL shall approve/provide comments on the submitted drawings within 7 days of first submission. In case resubmission is required, it shall be completed by the Contractor within next 5 days. The timelines for approval by BRPL shall be 5 days in case of every resubmission. However, repetitive submissions are not desirable. **Package A:**365 days from the date of LOI/LOA/PO or completion as per the BRPL schedule. **Package B:**150 days from the date of LOI/LOA/PO or completion as per the BRPL schedule.	
8	Defect Liability Period	DLP shall be 24 Months from the Date of Commissioning or 30 months from the date of delivery of final lot of supplies made, whichever is later. For GIS, PTR, Panels, CRP, Cable & Joints: The defect liability period shall be 60 months from the date of commissioning or 66 months from the date of delivery whichever is later. For other Equipment: As per technical Specification of equipment. If not specified, DLP shall be 24 Months from the Date of Commissioning or 30 months from the date of delivery of final lot of supplies made, whichever is later.	
9	Liquidated Damages	Supply Portion: 0.5% (half percent) of the total price for every week of delay or part thereof for undelivered units subject to maximum of 10% of total contract value ETC & Civil Portion: At the rate of 0.5% of the total contract price per each week of delay or pro-rate thereof, by which the completion is delayed. Max LD of delay is 10% of contract value.	
10	Contract Performance Bank Guarantee	10% (Ten percent) of the Total contract price (Incl. GST) shall be submitted within 15 days of award of contract with the validity till completion of the contract period.	
11	Performance Bank Guarantee	10% (Ten percent) of the Total contract price (Incl. GST) valid till completion of defect liability plus 3 months	
12	Reverse Auction	Acceptance for participation in Reverse Auction event	

Seal of the Bidder:

Signature:

Name:

ANNEXURE – 2.08

FORMAT OF NO DEMAND CERTIFICATE

NO DEMAND CERTIFICATE BY CONTRACTOR
(To be issued on letterhead of Contractor)

To ,

BSES RAJDHANI POWER LIMITED,
BSES Bhawan, Nehru Place,
Delhi -110019.

Name of the Project:
Contract No.:
Date of Contract:
Name of the Contractor:
We, M/s _____(Contractor) do hereby acknowledge and confirm that we have claimed Rs. _____ (Rs. _____) towards full and final settlement of our claims from BSES Rajdhani Power Limited, in respect of the aforesaid WO/PO/Contract No.: #######. Dated. ####. including all amendments, if any, to the said Contract, to our entire satisfaction and we further confirm that we have no claim whatsoever pending with BSES Rajdhani Power Limited under or in respect of the said Contract.
Notwithstanding any protest, note or objection recorded or raised by us in any correspondence, documents, measurement books and / or final bills etc.
(a) we confirm that BSES Rajdhani Power Limited stands fully discharged of all its obligations,
(b) we shall make no claim of any nature on BSES Rajdhani Power Limited or any of its affiliates or personnel, and
(c) we waive all our rights to lodge any claim or protest in future, in respect of the said Contract.

We have paid in full all applicable duties, levies, taxes and statutory and other amounts payable by us in connection with the above-mentioned Contract and amounts payable to or in relation to third parties engaged by us including our contractors, Contractors, employees and labour. No payment in this regard is pending or unpaid and we have no (and shall have no) claim against BSES Rajdhani Power Limited in this regard.
No refund has been received/ is envisaged to be received or reasonably believed to be receivable on account of taxes, duties or any other payment made by us in respect of the Contract. In case any refund corresponding to any amount paid or reimbursed by BSES Rajdhani Power Limited is received in the future, the same will be passed on to BSES Rajdhani Power Limited promptly and without any demand from them in this regard.
We are issuing this "NO DEMAND CERTIFICATE" in favor of BSES Rajdhani Power Limited with full knowledge of its contents and with our free consent without any influence, misrepresentation, coercion etc.

Date:
Place:

Signature:
Name:
Designation:
(Company Seal)

BSES

ANNEXURE – 2.09

FORMAT FOR LETTER OF INDEMNITY

Format for Letter of Indemnity
(Notes: Preferably shall be obtained on Stamp paper of appropriate value as applicable at the place of execution, if not, then at least on the letterhead of the Contractor)

Place:_____
Date: _____
To,

BSES Rajdhani Power Limited, BSES Bhawan, Nehru Place, Delhi -110019.

Dear Sirs,

WO/PO/Contract No. _____Dated _/__/___

For _____

Settlement of Dues
In consideration of your awarding the subject Work Order/Purchase Order/Contract to us and in further consideration of your having agreed to pay our final bill towards settlement of the dues in respect of the subject Work Order/Purchase Order/Contract, inter alia, on our assurances and representations that :
(a) We have paid in full all amounts payable by us including but not limited to duties, levies, taxes, cess, octroi, royalties, statutory payments, amounts payable to or in relation to third parties engaged by us including our contractors, Contractors, employees and labour, and
(b) we have fully complied with all requirements under applicable laws in connection with the subject Purchase Order/Work Order/Contract,
We_____,
unconditionally and irrevocably agree and undertake, to pay and/or settle entirely at our own cost and indemnify, defend and hold harmless you, your affiliates and your/your affiliates' personnel, directors and representatives, (hereinafter collectively referred to as "Indemnified Parties") from and against any and all liabilities, judgments, damages, losses, claims, costs and expenses, claimed, suffered or incurred or, likely to be claimed, suffered or incurred at any time by or against the Indemnified Parties or any of them as a result of, or arising out of, or in any way related to any failure or delay in payment of any of the amounts or compliances by us as aforesaid for any reason whatsoever.
Any notice(s) or communication(s) by you shall be sufficient proof that the Indemnified Parties have suffered or incurred loss, damages, liabilities etc. as aforesaid and we shall upon receipt of such notice(s) or communication(s) immediately, without any delay or demur or contest, make payment to you of the entire amount demanded under the said notice(s) or communication(s).
This letter of indemnity shall be in addition to and not in derogation of any other indemnity/ guarantee and/or security which we may have executed in your favor or your rights and entitlements under the contract.
This letter shall be governed by and construed and interpreted to accordance with the laws of India, and shall be subject to the exclusive jurisdiction of the courts of law at Mumbai.

Yours faithfully,

For M/s_____
Authorized Signatory

VOLUME – II

FINANCIAL BID (PRICE FORMAT)

BSES

BSES RAJDHANI POWER LIMITED

SUMMARY OF THE QUOTED PRICES

PACKAGE A

SCHEME DESCRIPTION	Scheme no	Location	Total price for supply inclall Taxes & freight (INR)	Total for Erection, Testing & Commissioning incl all Taxes (INR)	Total for Civil Works incl all Taxes (INR)	Grand Total (INR)
Survey, Design, Supply, Installation, Testing and Commissioning including Civil Works of 66/11 kV GIS Grid substation with PTRs on Single point responsibility basis.	1	Molarbandh Grid				
	2	Vamasundari Grid				
Total (incl. GST)						
In Words:						

We declare that the following are our quoted prices in INR for the entire project/schemes.

Date: Bidder Name:

Place: Bidders Address:

Name & Signature .....

Designation: .....

Common Seal: .....

Note: Bidder has to submit Price Bids for all the schemes in the package compulsorily. Any Partial Price bid is liable for rejection.

BSES

BSES RAJDHANI POWER LIMITED

SUMMARY OF THE QUOTED PRICE

PACKAGE B1

SCHEME DESCRIPTION	Scheme no.	Location	Total price for supply F.O.R site incl all Taxes & freight (INR)	Total for Erection, Testing & Commissioning incl all Taxes (INR)	Grand Total (INR)
Supply, Laying, Testing & Commissioning Of 66kV 1Cx1000 Sq.mm. & 66kV 3Cx300 Sq.mm. Cables With Required Accessories on Turnkey Basis	1	Molarbandh infeed			
	2	Vamasundari infeed			
	3	220KV RKP to JNU and Vasant Kunj C BlK			
	4	220KV DTL PPK-1 to 66KV G-3			
	5	220KV DTL PPK-1 to 66KV G-2			
	6	Pankha road to Sagarpur ckt.			
Total (incl. GST)					
In Words:					

We declare that the following are our quoted prices in INR for the entire project/schemes.

Date: Bidder Name:

Place: Bidders Address:

Name & Signature .....

Designation: .....

Common Seal: .....

Note: Bidder has to submit Price Bids for all the schemes in the package compulsorily. Any Partial Price bid is liable for rejection.

BSES

SUMMARY OF THE QUOTED PRICE

PACKAGE B2

SCHEME DESCRIPTION	Scheme no.	Location	Total price for supply F.O.R site inclusive all Taxes & freight (INR)	Total for Erection, Testing & Commissioning inclusive all Taxes (INR)	Grand Total (INR)
Supply, Laying, Testing & Commissioning Of 33kV 3Cx400 Sq.mm. Cables With Required Accessories On Turnkey Basis at	7 A	220 kV Peeragarhi to Mukherjee Park (Ckt–1 & 2)			
	7 B	220 kV Peeragarhi to Paschim Vihar (Ckt–1 & 2)			
	8	Malviya Nagar to Shivalik Circuit			
	9	Pankha Road to Mayapuri Circuit			
Total (incl. GST)					
In Words:					

We declare that the following are our quoted prices in INR for the entire project/schemes.

Date: Bidder Name:

Place: Bidders Address:

Name & Signature ……..

Designation: ……

Common Seal: ……

Note: Bidder has to submit Price Bids for all the schemes in the package compulsorily. Any Partial Price bid is liable for rejection.

BSES RAJDHANI POWER LIMITED

GRAND SUMMARY OF THE QUOTED PRICE

S. Nos.	PACKAGE DESCRIPTION	Grand Total (INR)
1	**PACKAGE A**	
2	**PACKAGE B1**	
3	**PACKAGE B2**	
Total (incl. GST)		
Total in Words		

We declare that the following are our quoted prices in INR for the entire project/schemes.

Date: Bidder Name:

Place: Bidders Address:

Name & Signature .....

Designation: .....

Common Seal: .....

Note:

1) Bidder may quote either for Package A or Package B or both Packages. Bidder shall submit a single EMD based on the Packages quoted considering the EMD Value provided in Table 1.
2) All prices for the packages quoted are inclusive of taxes and duties, GST and freight etc. Bidder shall include & indicate any others taxes under the applicable law(s) for supply and services to be performed in the purchaser's country.
3) Bidder shall include & indicate any others taxes under the applicable law(s) for supply and services to be performed in the purchaser's country.
4) The bidder shall, at its own, handle all imported equipment's and handle all formalities for custom clearances, port charges, etc. if any
5) All prices for the packages quoted are against the scope of work under the contract shall be executed strictly as per the NIT conditions and the technical specification.
6) Quoted prices shall be as per the Bill of quantities (BOQ) as attached. However, any items/material/machinery, not specifically mentioned In BOQ as well as in the technical specifications but required for successful completeness, Erection, Testing and Commissioning of the package awarded shall be deemed to be in the scope of the bidder.
7) Insurance as per the clause defined in GCC/SCC and other contract conditions, is included in the quoted prices. However, Bidder shall indicate the value of the insurance taken, separately.
8) Site visit is advisable prior to submission of quotation.

PRICE BID (SUPPLY, SERVICES, CIVIL)

Package No A – Scheme no.1

New 66/11kV Molarbandh GIS Grid Substation

BSES

Package A

Scheme -1. Design, Engineering, Supply & ETC of 66/11kV Molarband GIS with 2 PTR

Supply

S.No	Item Description	Qty	UOM	Basic (Rs)	Freight (Rs)	GST (Rs)	Unit Landed (Rs)	Total Landed Cost (Rs)
1	66kV GIS Panels including LCC (As per Tender SLD)							
1a	66kV GIS Panel Line panel(As per Tender SLD)- Including Power Cable Termination	4	Set					
1b	66kV GIS Panel Transformer(As per Tender SLD)-Including Power Cable Termination	4	Set					
1c	66kV GIS Panel Bus coupler(As per Tender SLD)	1	Set					
1d	66kV GIS Bus PT(As per Tender SLD)	2	Set					
2	66/11KV 31.5 MVA Power Transformer including NIFPS	2	Set					
3	Station aux Transformer 11/0.433kV 400kVA	1	No					
4	66kV Control Relay Panel							
4a	66kV Control Relay Panel Line Feeder	4	Set					
4b	66kV Control Relay Panel Transformer Feeder	4	Set					
4c	66kV Control Relay Panel Bus coupler Feeder	1	Set					
5	220V Ni-Cd minimum 150AH each(As per battery Sizing calculation &specs)	2	Set					
6	CHARGER,BTRY,FLOAT CUM BOOST ;220V with DCDB	1	Nos					
7	ACDB	1	Nos					
8a	11kV APFC 4 Stage, 3.6 MVAR capacitor bank with motorized isolator	2	Sets					
8b	11kV APFC 4 Stage, 7.2 MVAR capacitor bank with motorized isolator	2	Sets					
9	66kV single phase gapless metal oxide surge arrestor	21	Nos					
10	66kV Bus Post Insulator	9	Nos					
11	Cable Mounting Structure	9	Nos					
12	LA Mounting Structure	9	Nos					
13	BPI Mounting Structure	9	Nos					

14	Supply of H-pole structure for I/C feeder circuits as per drawing	4	Nos					
15	11kV VCB switchgear with numerical protective relays(as per SLD)							
15a	11kV VCB switchgear with numerical protective relays(as per Tender SLD)- Incoming	4	Set					
15b	11kV VCB switchgear with numerical protective relays(as per Tender SLD)- Bus coupler	2	Set					
15c	11kV VCB switchgear with numerical protective relays(as per Tender SLD)- outgoing	30	Set					
15d	11kV VCB switchgear with numerical protective relays(as per Tender SLD)- Capacitor (7.2 MVAR)	2	Set					
15e	11kV VCB switchgear with numerical protective relays(as per Tender SLD)- Capacitor (3.6 MVAR)	2	Set					
15f	11kV VCB switchgear Bus PT with riser with numerical protective relays(as per SLD)	2	Set					
15g	11kV VCB switchgear Bus PT Panel with numerical protective relays(as per SLD)	2	Set					
15h	11kV VCB switchgear Station Trafo Panel with numerical protective relays(as per SLD)	1	Set					
15i	11 kV Bus/Cable Earthing Truck suitable for Incomer Panels	2	Set					
15j	11 kV Bus/Cable Earthing Truck suitable for Outgoing Panels	2	Set					
16	SCADA RTU	1	Set					
17	Grounding and earthing of entire substation including earthing of transformers, Capacitor Banks, Structures, fence, other Equipments etc. in all respect.	1	Lot					
18	High mast lighting 16M including Light Fixtures.	4	Nos					
19	Indoor LED lighting system including emergency lighting	1	Lot					
20	Air conditioning with sequence timer for complete substation building except Toilet and Pantry	1	Lot					

21	Exhaust and Ventilation for Toilet, Pantry and Cable cellar room etc.	1	Lot					
22	Building and outdoor lightning protection system (DSLP)	1	Lot					
23	Control cables							
A	6CX4Sqmm	1000	Mtr					
B	6CX2.5Sqmm	3000	Mtr					
C	10CX2.5Sqmm	3000	Mtr					
24	LT power cable							
A	2CX10Sqmm	600	Mtr					
B	4CX10Sqmm	800	Mtr					
C	4CX300Sqmm	100	Mtr					
D	2CX2.5Sqmm	250	Mtr					
E	4CX50Sqmm	100	Mtr					
25	11kV Power cable termination kits							
A	11KV 3CX400Sqmm I/D cable termination	18	Nos					
B	11KV 1CX1000Sqmm I/D cable termination	42	Nos					
26	66kV 1CX1000Sqmm O/D cable termination	6	Nos					
27	66kV 3CX300Sqmm O/D cable termination	8	Nos					
28	Connectors and Clamps with 10% Spare as per requirement	1	Lot					
29	Cable trays including supporting structure as per requirement	1	Lot					
30	Cabling between equipment and RTU as per requirement	1	Lot					
31	Control and LT Power Cable Terminations along with supply of Glands & Lugs as per requirement.	1	Lot					
32	Fire Extinguisher as per spec	1	Lot					
33	Fire detection and alarm system for building	1	Lot					
34	Outdoor LED Lighting including street lighting with poles as per spec	1	Lot					
35	Line current differential relay for remote location including LIU, Joints & Other Accessories in all respect as per spec	4	Nos					
36	Supply of MTR,ENERGY,3P4W,1A,PREMIER 300	47	Nos					
37	Video Surveillance system as per spec	1	lot					
38	EOT Crane (5 TON)	1	Set					

39	Cable entry sealing as per requirement	1	lot					
40	Fire Suppression System of 11KV Panels	1	lot					
41	IT Requirements as per spec/BOQ	1	Lot					
42	Supply of Rubber MAT as per specifications.	1	Lot					
43	Supply of Zebra Conductor	50	Mtr.					
44	Spares (as per specs)	1	Lot					
45	Tools and tackles including testing instruments as per spec	1	Lot					
46	11KV Bus Duct	1	lot					

ETC

S.No	Item Description	Qty	UOM	Basic (Rs)	GST (Rs)	Unit Landed (Rs)	Total Landed Cost (Rs)
1	ETC OF 66kV GIS Panels including LCC (As per Tender SLD)						
1a	66kV GIS Panel Line panel(As per Tender SLD)-Including Power Cable Termination.	4	Sets				
1b	66kV GIS Panel Transformer(As per Tender SLD)-Including Power Cable Termination	4	Sets				
1c	66kV GIS Panel Bus coupler(As per Tender SLD)	1	Sets				
1d	66kV GIS Bus PT(As per Tender SLD)	2	Sets				
2	ETC OF 66/11KV Power Transformer including NIFPS	2	Set				
3	ETC OF Station Aux Transformer 11/0.433kV 400kVA	1	Nos				
4	ETC OF 66kV Control Relay Panel						
4a	66kV Control Relay Panel Line Feeder	4	Nos				
4b	66kV Control Relay Panel Transformer Feeder	4	Nos				
4c	66kV Control Relay Panel Bus coupler Feeder	1	Nos				
5	220V Ni-Cd minimum 150AH each(As per battery Sizing calculation &specs)	2	Lot				
6	ETC OF DCDB with battery charger	1	Nos				
7	ETC OF ACDB	1	Nos				
8a	ETC OF 11kV APFC 4 Stage, 3.62 MVAR capacitor bank with motorized isolator	2	Sets				

8b	ETC OF 11kV APFC 4 Stage, 7.2 MVAR capacitor bank with motorized isolator	2	Sets				
9	ETC of ARRSTR,ELEC,OUTDR ELEC;60KV;10KA	21	Nos				
10	ETC of 66kV Bus Post Insulator	9	Nos				
11	ETC of Cable Mounting Structure	9	Nos				
12	ETC of LA Mounting Structure	9	Nos				
13	ETC of BPI Mounting Structure	9	Nos				
14	ETC OF H-pole structure for I/C feeder circuits including Civil work	4	Nos				
15	ETC OF 11kV VCB switchgear with numerical protective relays(as per SLD)						
15a	11kV VCB switchgear with numerical protective relays(as per Tender SLD)- Incoming	4	Set				
15b	11kV VCB switchgear with numerical protective relays(as per Tender SLD)- Bus coupler	2	Set				
15c	11kV VCB switchgear with numerical protective relays(as per Tender SLD)- outgoing	30	Set				
15d	11kV VCB switchgear with numerical protective relays(as per Tender SLD)- Capacitor (7.2 MVAR)	2	Set				
15d	11kV VCB switchgear with numerical protective relays(as per Tender SLD)- Capacitor (3.6 MVAR)	2	Set				
15e	11kV VCB switchgear with numerical protective relays(as per Tender SLD)- stn Xmer	1	Set				
15f	11kV VCB switchgear Bus PT with riser with numerical protective relays(as per SLD)	2	Set				
15g	11kV VCB switchgear Bus PT Panel with numerical protective relays(as per SLD)	2	Set				
16	ETC OF SCADA RTU	1	Set				
17	ETC of Grounding and earthing of entire substation including earthing of transformers, Capacitor Banks, Structures, fence, other Equipment etc. in all respect.	1	Lot				
18	ETC of high mast lighting 16M including Light Fixtures.	4	Nos				
19	ETC of Indoor LED lighting system including emergency lighting	1	Lot				
20	ETC of Air conditioning for complete substation building except Toilet and Pantry	1	Lot				

21	ETC of Exhaust and Ventilation for Toilet and Pantry, cellar Room.	1	Lot				
23	ETC of Building and outdoor lightning protection system	1	Lot				
23	Laying, testing & termination of Control cables along with lugs & glands						
A	6CX4Sqmm	1000	Mtr				
B	6CX2.5Sqmm	3000	Mtr				
C	10CX2.5Sqmm	3000	Mtr				
24	Laying, testing & termination of Power cables along with lugs & glands						
A	2CX10Sqmm	600	Mtr				
B	4CX10Sqmm	800	Mtr				
C	4CX300Sqmm	100	Mtr				
D	2CX2.5Sqmm	250	Mtr				
E	4CX50Sqmm	100	Mtr				
25	ITC of 11kV Power cable termination kits along with Glands						
A	11KV 3CX400Sqmm I/D cable termination	18	Nos				
B	11KV 1CX1000Sqmm I/D cable termination	42	Nos				
26	ITC of 66kV 1CX1000Sqmm O/D cable termination	6	Nos				
27	66kV 3CX300Sqmm O/D cable termination	8	Nos				
28	Installation of Connectors and Clamps	1	Lot				
29	Installation of Cable trays including supporting structure.	1	Lot				
30	Laying, testing & termination of Cabling between equipment and RTU including glanding	1	Lot				
31	Installation of Outdoor LED Lighting including street lighting with poles	1	Lot				
32	ETC OF Line current differential relay and accessories for remote location	4	Nos				
33	ETC of Energy meter including wire, lug, ferruel etc. for connection.	47	Nos.				
34	ETC of Video Surveillance system	1	Set				
35	ETC OF EOT Crane	1	Set				
36	ETC OF Fire Extinguisher	1	Lot				
37	ETC of Fire Suppression System of 11KV Panels	1	lot				
38	ETC OF Fire detection and alarm system	1	Lot				
39	ETC of Cable entry sealing	1	lot				
40	ETC OF IT Requirements as per BOQ	1	Lot				

41	Laying of Rubber MAT at per requirement	1	Lot				
42	Laying of 66 kV, 11 KV HT Cable including Dressing of the same as per specifications.	3500	Mtr.				
43	Inspection and Training of BRPL Executives (As per Specs)	1	Lot				
44	ETC of Zebra Conductor	50	Mtr.				
45	ETC of 11 kV Bus Duct	1	set				

CIVIL

S.No	Item Description	Qty	UOM	Basic (Rs)	GST (Rs)	Unit Landed (Rs)	Total Landed Cost (Rs)
1	Complete Design & Engineering of Grid Substation The building foundation shall be designed for Cellar/Ground floor, First floor, Second floor + 1 additional floor for Future Planning. Including survey of Plot if required. i) Approval of architectural drawing - 10% ii) Approval of complete structural drawings - 40% iii) Approval of finishing drawings including door/window schedule - 20% iv) Approval plumbing/drainage/water-supply/RWH and other external development related drawings - 20% v) Submission of as built drawings - 10%	1	LS				
2	Substation building, with cable cellar, RCC staircase for approach to roof as per layout and specification. In case of increase in length/width of building due to equipment dimension, the same shall be in scope of Vendor. No additional cost will be given. (Payment break up for Running Bill shall be as follows for this item only.) i) up to DPC -10% ii) Roof slab casting - cable-cellar/Ground Floor - 10% iii) Roof slab casting- First floor-10% iv) Roof slab Casting - Second floor including GIS roof slab &	1	Lot				

	mumty roof - 20% v) Internal/ external finishing and terracing(Waterproofing of Top Roof) - 10% vi) Indoor trenches including supporting hangers & chequered plate- 5% vii) Flooring/painting/water supply & sanitary system- 15% viii) Doors, windows, staircase railing, etc- 10% ix) Final completion - 10%						
3	All Outdoor Control & Power cable trenches with trench covers including culverts for Road crossing (RCC slab or RCC cover), supporting hangers, etc as per specification and system requirement.	1	Lot				
4	Power transformer foundations including oil collection pit as per IS/IE/TAC & P/F MS grating over oil collection chamber around transformer foundation as per specification.	3	Nos				
5	Construction of NIFPS tank and pedestals for NIFPS equipment	3	Nos				
6	RCC Fire wall between two transformers.	7	Nos				
7	RCC road inside substation as per layout and specification	1	Lot				
8	A)Outdoor Switchyard development (as per approved layout/ specification including any area which is earmarked for Future Development within Grid Boundary) - 90% B) Landscaping & Green belt development as per approved layout (including P/L GI/PVC pipes with hydrants at suitable intervals/locations for post maintenance of green belt).- 10%	1	Lot				
9	Underground water tank of 20000 litres storage capacity with electrical (Booster) submersible pump of sufficient capacity and one outlet and hose, etc.	1	Set				
10	Rain water drainage arrangement within and outside switchyard, Rain water harvesting system (as per approved CGWB specification) &	1	Lot				

	arrangement for sewerage system including Septic tank and soak pit, drinking water, sanitary system , etc.							
11	All foundations such as Equipment foundation, Capacitor bank foundation, Auxiliary/ local transformer foundation, foundation of lighting poles, high mast, etc.	1	Lot					
12	Fencing with gate of Switchyard, Capacitor bank, Auxiliary/local transformer, etc as per IE/CBIP.	1	Lot					
13	Construction of BOT and pipe connection with electric motor for Burnt Oil tank as per IS/IE/TAC.	2	Lot					
14	Supply of good earth (or other approved filling material) including filling in trenches, plinth, sides of foundations & in open areas upto required formation level in layers not exceeding 20 cm in depth, consolidating each deposited layer by ramming & watering complete.	1	Lot					
15	Construction of permanent Security Gumtee (approx. Internal area of 9 SQM) with separate toilet for security guard and Parking shed is to be made as per standard approved drawing.	1	Lot					

PACKAGE-A

Scheme -2. Design, Engineering, Supply & ETC of 66/11kV Vamasundari GIS with 2 PTR

Supply

S.No	Item Description	Qty	UOM	Basic (Rs)	Freight (Rs)	GST (Rs)	Unit Landed (Rs)	Total Landed Cost (Rs)
1	66kV GIS Panels including LCC (As per Tender SLD)							
1a	66kV GIS Panel Line panel(As per Tender SLD)- Including Power Cable Termination	4	Set					

1b	66kV GIS Panel Transformer(As per Tender SLD)-Including Power Cable Termination	2	Set					
1c	66kV GIS Panel Bus coupler(As per Tender SLD)	1	Set					
1d	66kV GIS Bus PT(As per Tender SLD)	2	Set					
2	66/11KV 31.5 MVA Power Transformer including NIFPS	2	Set					
3	Station aux Transformer 11/0.433kV 400kVA	1	No					
4	66kV Control Relay Panel							
4a	66kV Control Relay Panel Line Feeder	4	Set					
4b	66kV Control Relay Panel Transformer Feeder	2	Set					
4c	66kV Control Relay Panel Bus coupler Feeder	1	Set					
5	220V Ni-Cd minimum 150AH each(As per battery Sizing calculation &specs)	2	No					
6	CHARGER,BTRY,FLOAT CUM BOOST ;220V with DCDB	1	Nos					
7	ACDB	1	Nos					
8	11kV APFC 4 Stage, 7.2 MVAR capacitor bank with motorized isolator	2	Sets					
9	66kV single phase gapless metal oxide surge arrestor	18	Nos					
10	66kV Bus Post Insulator	6	Nos					
11	Cable Mounting Structure	6	Nos					
12	LA Mounting Structure	6	Nos					
13	BPI Mounting Structure	6	Nos					
14	Supply of H-pole structure for I/C feeder circuits as per drawing	4	Nos					
15	11kV VCB switchgear with numerical protective relays(as per SLD)		Set					
15a	11kV VCB switchgear with numerical protective relays(as per Tender SLD)-Incoming	2	Set					
15b	11kV VCB switchgear with numerical protective relays(as per Tender SLD)-Bus coupler	1	Set					
15c	11kV VCB switchgear with numerical protective relays(as per Tender SLD)-outgoing	20	Set					
15d	11kV VCB switchgear with numerical protective	2	Set					

	relays(as per Tender SLD)-Capacitor (7.2 MVAR)							
15e	11kV VCB switchgear with numerical protective relays(as per Tender SLD)-stn Xmer	1	Set					
15f	11kV VCB switchgear Bus PT with riser with numerical protective relays(as per SLD)	1	Set					
15g	11kV VCB switchgear Bus PT Panel with numerical protective relays(as per SLD)	1	Set					
15h	Cable earthing truck	2	Nos					
15i	Bus earthing truck	1	Nos					
16	SCADA RTU	1	Set					
17	Grounding and earthing of entire substation including earthing of transformers, Capacitor Banks, Structures, fence, other Equipments etc. in all respect.	1	Set					
18	High mast lighting 16M including Light Fixtures.	2	Nos					
19	Indoor LED lighting system including emergency lighting	1	Lot					
20	Air conditioning with sequence timer for complete substation building except Toilet and Pantry	1	Lot					
21	Exhaust and Ventilation for Toilet, Pantry and Cable cellar room etc.	1	Lot					
22	Building and outdoor lightning protection system (DSLP)	1	Lot					
23	Control cables							
A	6CX4Sqmm	500	Mtr					
B	6CX2.5Sqmm	3500	Mtr					
C	10CX2.5Sqmm	4500	Mtr					
24	LT power cable							
A	2CX10Sqmm	1500	Mtr					
B	4CX10Sqmm	800	Mtr					
C	4CX300Sqmm	100	Mtr					
D	2CX2.5Sqmm	500	Mtr					
E	4CX50Sqmm	100	Mtr					
25	11kV Power cable termination kits along with Glands qty							
A	11KV 3CX400Sqmm I/D cable termination	10	Nos					
B	11KV 1CX1000Sqmm I/D cable termination	36	Nos					

BSES

26	66kV 1CX1000Sqmm O/D cable termination	6	Nos					
27	66kV 3CX300Sqmm O/D cable termination	8	Nos					
28	Connectors and Clamps with 10% Spare as per requirement	1	Lot					
29	Cable trays including supporting structure as per requirement	1	Lot					
30	Cabling between equipment and RTU as per requirement	1	Lot					
31	Control and LT Power Cable Terminations along with supply of Glands & Lugs as per requirement.	1	Lot					
32	Fire Extinguisher as per spec	1	Lot					
33	Fire detection and alarm system for building	1	Lot					
34	Outdoor LED Lighting including street lighting with poles as per spec	1	Lot					
35	Line current differential relay for remote location including LIU, Joints & Other Accessories in all respect as per spec	4	Nos					
36	Energy meter	31	Nos					
37	Video Surveillance system as per spec	1	Set					
38	EOT Crane (5 TON)	1	Set					
39	Cable entry sealing as per requirement	1	lot					
40	Fire Suppression System of 11KV Panels	1	lot					
41	IT Requirements as per spec/BOQ	1	Lot					
42	Supply of Rubber MAT as per specifications.	1	Lot					
43	Supply of Zebra Conductor	50	Mtr.					
44	Spares (as per specs)	1	Lot					
45	Tools and tackles including testing instruments as per spec	1	Lot					

ETC

S.No	Item Description	Qty	UOM	Basic (Rs)	GST (Rs)	Unit Landed (Rs)	Total Landed Cost (Rs)
1	ETC OF 66kV GIS Panels including LCC (As per Tender SLD)						

1a	66kV GIS Panel Line panel(As per Tender SLD)-Including Power Cable Termination.	4	Sets				
1b	66kV GIS Panel Transformer(As per Tender SLD)-Including Power Cable Termination	2	Sets				
1c	66kV GIS Panel Bus coupler(As per Tender SLD)	1	Sets				
1d	66kV GIS Bus PT(As per Tender SLD)	2	Sets				
2	ETC OF 66/11KV Power Transformer including NIFPS	2	Set				
3	ETC OF Station Aux Transformer 11/0.433kV 400kVA	1	Nos				
4	ETC OF 66kV Control Relay Panel						
4a	66kV Control Relay Panel Line Feeder	4	Nos				
4b	66kV Control Relay Panel Transformer Feeder	2	Nos				
4c	66kV Control Relay Panel Bus coupler Feeder	1	Nos				
5	220V Ni-Cd minimum minimum 150AH each(As per battery Sizing calculation &specs)	2	Lot				
6	ETC OF DCDB with battery charger	1	Nos				
7	ETC OF ACDB	1	Nos				
8	ETC OF 11kV APFC 4 Stage, 7.2 MVAR capacitor bank with motorized isolator	2	Sets				
9	ETC of ARRSTR,ELEC,OUTDR ELEC;60KV;10KA	18	Nos				
10	ETC of 66kV Bus Post Insulator	6	Nos				
11	ETC of Cable Mounting Structure	6	Nos				
12	ETC of LA Mounting Structure	6	Nos				
13	ETC of BPI Mounting Structure	6	Nos				
14	ETC OF H-pole structure for I/C feeder circuits including Civil work	4	Nos				
15	ETC OF 11kV VCB switchgear with numerical protective relays(as per SLD)						
15a	11kV VCB switchgear with numerical protective relays(as per Tender SLD)-Incoming	2	Set				
15b	11kV VCB switchgear with numerical protective relays(as per Tender SLD)-Bus coupler	1	Set				
15c	11kV VCB switchgear with numerical protective relays(as per Tender SLD)-outgoing	20	Set				
15d	11kV VCB switchgear with numerical protective relays(as per Tender SLD)-Capacitor (7.2 MVAR)	2	Set				
15e	11kV VCB switchgear with numerical protective relays(as per Tender SLD)-stn Xmer	1	Set				

BSES

15f	11kV VCB switchgear Bus PT with riser with numerical protective relays(as per SLD)	1	Set				
15g	11kV VCB switchgear Bus PT Panel with numerical protective relays(as per SLD)	1	Set				
16	ETC OF SCADA RTU	1	Set				
17	ETC of Grounding and earthing of entire substation including earthing of transformers, Capacitor Banks, Structures, fence, other Equipments etc. in all respect.	1	Set				
18	ETC of high mast lighting 16M including Light Fixtures.	2	Nos				
19	ETC of Indoor LED lighting system including emergency lighting	1	Lot				
20	ETC of Air conditioning for complete substation building except Toilet and Pantry	1	Lot				
21	ETC of Exhaust and Ventilation for Toilet and Pantry, cellar Room.	1					
23	ETC of Building and outdoor lightning protection system	1	Lot				
23	Laying, testing & termination of Control cables along with lugs & glands						
A	6CX4Sqmm	500	Mtr				
B	6CX2.5Sqmm	3500	Mtr				
C	10CX2.5Sqmm	4500	Mtr				
24	Laying, testing & termination of Power cables along with lugs & glands						
A	2CX10Sqmm	1500	Mtr				
B	4CX10Sqmm	800	Mtr				
C	4CX300Sqmm	100	Mtr				
D	2CX2.5Sqmm	500	Mtr				
E	4CX50Sqmm	100	Mtr				
25	ITC of 11kV Power cable termination kits along with Glands						
A	11KV 3CX400Sqmm I/D cable termination	10	Nos				
B	11KV 1CX1000Sqmm I/D cable termination	36	Nos				
26	ITC of 66kV 1CX1000Sqmm O/D cable termination	6	Nos				
27	66kV 3CX300Sqmm O/D cable termination	8					
28	Installation of Connectors and Clamps	1	Lot				
29	Installation of Cable trays including supporting structure.	1	Lot				
30	Laying, testing & termination of Cabling between equipment and RTU including glanding	1	Lot				

BSES

31	Installation of Outdoor LED Lighting including street lighting with poles	1	Lot				
32	ETC OF Line current differential relay and accessories for remote location	4	Nos				
33	Installation of Energy meter	31	Lot				
34	ETC of Video Surveillance system	1	Set				
35	ETC OF EOT Crane	1	Set				
36	ETC OF Fire Extinguisher	1	Lot				
37	ETC of Fire Suppression System of 11KV Panels	1	lot				
38	ETC OF Fire detection and alarm system	1	Lot				
39	ETC of Cable entry sealing	1	lot				
40	ETC OF IT Requirements as per BOQ	1	Lot				
41	Laying of Rubber MAT at per requirement	1	Lot				
42	Laying of 66 kV, 11 KV HT Cable including Dressing of the same as per specifications.	2500	Mtr.				
43	Inspection and Training of BRPL Executives (As per Specs)	1	Lot				
44	ETC of Zebra Conductor	50	Mtr.				

CIVIL

S.No	Item Description	Qty	UOM	Basic (Rs)	GST (Rs)	Unit Landed (Rs)	Total Landed Cost (Rs)
1	Complete Design & Engineering of Grid Substation The building foundation shall be designed for Cellar/Ground floor, First floor, Second floor + 1 additional floor for Future Planning. Including survey of Plot if required. i) Approval of architectural drawing - 10% ii) Approval of complete structural drawings - 40% iii) Approval of finishing drawings including door/window schedule - 20% iv) Approval plumbing/drainage/water-supply/RWH and other external development related drawings - 20% v) Submission of as built drawings - 10%	1	LS				
2	Substation building, with cable cellar, RCC staircase for approach to roof as per layout and specification. In case of increase in length/width of building due to equipment dimension, the same shall be in scope of Vendor. No additional cost will be given. (Payment break up for Running Bill shall be as follows for	1	Lot				

	this item only.) i) up to DPC -10% ii) Roof slab casting - cable-cellar/Ground Floor - 10% iii) Roof slab casting- First floor- 10% iv) Roof slab Casting - Second floor including GIS roof slab & mumty roof - 20% v) Internal/ external finishing and terracing(Waterproofing of Top Roof) - 10% vi) Indoor trenches including supporting hangers & chequered plate- 5% vii) Flooring/painting/water supply & sanitary system- 15% viii) Doors, windows, staircase railing, etc- 10% ix) Final completion - 10%						
3	All Outdoor Control & Power cable trenches with trench covers including culverts for Road crossing (RCC slab or RCC cover), supporting hangers, etc as per specification and system requirement.	1	Lot				
4	Power transformer foundations including oil collection pit as per IS/IE/TAC & P/F MS grating over oil collection chamber around transformer foundation as per specification.	2	Nos				
5	RCC Fire walls i) Between Two PTR ii) Building wall exposed to PTR should be constructed as a fire wall. Iii) Boundary wall of plot should be constructed as a fire wall lies around the live part of PTR (i.e. approx 37.00m)	3	Nos				
6	RCC road inside substation as per layout and specification	1	Lot				
7	A)Outdoor Switchyard development (as per approved layout/ specification including any area which is earmarked for Future Development within Grid Boundary) - 90% B) Landscaping & Green belt development as per approved layout (including P/L GI/PVC pipes with hydrants at suitable intervals/locations for post maintenance of green belt).- 10%	1	Lot				
8	Underground water tank of 20000 litters storage capacity with electrical (Booster) submersible pump of sufficient capacity and one outlet and hose, etc.	1	Set				

9	Rain water drainage arrangement within and outside switchyard, Rain water harvesting system (as per approved CGWB specification) & arrangement for sewerage system including Septic tank and soak pit, drinking water, sanitary system , etc.	1	Lot				
10	All foundations such as Equipment foundation, Capacitor bank foundation, Auxiliary/ local transformer foundation, foundation of lighting poles, high mast, etc.	1	Lot				
11	Fencing with gate of Switchyard, Capacitor bank, Auxiliary/local transformer, etc as per IE/CBIP.	1	Lot				
12	BOT and pipe connection with electric motor for Burnt Oil tank as per IS/IE/TAC for NIFPS equipment along with NIFPS tank and pedestal.	1	Lot				
13	Supply of good earth (or other approved filling material) including filling in trenches, plinth, sides of foundations & in open areas upto required formation level in layers not exceeding 20 cm in depth, consolidating each deposited layer by raming & watering complete.	1	Lot				
14	Construction of permanent Security Gumtee (approx. Internal area of 9 SQM) with separate toilet for security guard and Parking shed is to be made as per standard approved drawing.	1	Lot				

BSES

PRICE BID (SUPPLY & SERVICES)

Package No B1 –

66 kV Cables Infeeds

BSES

BSES RAJDHANI POWER LIMITED

BILL OF QUANTITY (BOQ)

Package B1

Scheme -1. Infeeds from 220KV Sarita Vihar Substation DTL to Molarbandh Substation BRPL by lying of 04 Nos 66KV, 3CX300sq.mm. XLPE cables

Supply

S.No	Item Description	UOM	Qty	Basic (Rs)	Freight (Rs)	GST (Rs)	Unit Landed (Rs)	Total Landed Cost (Rs)
1	CBL,PWR,300MM2;3C;66KV;ARMD OFC Embedded	M	16800					
2	KIT,JOINTG,66KV;3CX300MM2;HS with OFC JOINT	EA	56					
3	KIT,TERM,HS O/D;66KV;3CX300MM2 with OFC JOINT	EA	8					
4	CHNL,STRCTL,ISMC100;100MM;50mm ;7.7mm	MT	2					
5	ANGLE,STRCTL,65MM;65MM;6MM;MS	MT	0.5					
6	ANGLE,STRCTL,75MM;75MM;6MM;IS2 062	MT	0.5					
7	STRIP,MTLC,EARTHNG;50X6MM;MS GALVANIZED	KG	1000					
8	ARRSTR,ELEC,OUTDR ELEC;60KV;10KA	EA	6					
9	CNDCTR,ACSR ZEBRA UNINSUL	M	50					
10	P.G. CLAMP,F/ZEBRA CONDUCTOR	EA	12					
11	RLY,NUMERICAL,220VDC,DISTANCE,MICOMP543	NOS	4					
12	Fixing of Cable identification Tags	EA	496					
13	RCC Slab (550X675) as per the specification of BRPL	EA	8273					
14	Warning Tape	M	4964					
15	HDPE Pipe 225 MM dia PN-6 PE80	M	6800					
16	RFID Electronic Passive Ball Marker 3M Make	EA	84					
17	RFID Electronic Active Ball Marker 3M Make	EA	56					
18	B Class GI Pipe 8" O.D.	M	72					
19	RCC Coffin for joint as per the specification of BRPL	EA	56					
20	Cable Route Marker as per the specification of BRPL	EA	84					
21	Cable Joint Marker as per the specification of BRPL	EA	14					
22	HDPE Duct-40mm (PN6,PE80)	M	900					
23	Optical Fiber Cable	M	900					
24	Joint enclosure 48F Optic Fiber Cable	EA	8					
25	LIU	EA	8					

BSES

ETC

S.No	Item Description	UOM	Qty	Basic (Rs)	GST (Rs)	Unit Landed (Rs)	Total Landed Cost (Rs)
1	Digging of cable trench as per specification and drawings. Rate is inclusive of digging and backfilling. Measurement shall be as per actual depth excavated. For Dense Carpeted bituminous Road.	CUM	3280				
2	Digging of cable trench as per specification and drawings. Rate is inclusive of digging and backfilling. Measurement shall be as per actual depth excavated. For Rocky Soil	CUM	1560				
3	Digging of joint pit suitable for 33/66 KV cable joint box and covering the joint box with sand and providing protection as per BYPL/BRPL design. Dence carpet	CUM	240				
4	Digging of joint pit suitable for 33/66 KV cable joint box and covering the joint box with sand and providing protection as per BYPL/BRPL design. **For Hard Rocky Soil**	Cum	96				
5	Digging of test pits of required size (not less than 1/2 Mtr. Wide at site for identification of cable route). Relevant volume shall be deducted from quantities of same item of cable digging For Dense carpeted bituminous road / CC Road	EA	85				
6	Digging of test pits of required size (not less than 1/2 Mtr. Wide at site for identification of cable route). Relevent volume shall be deducted from quantities of same item of cable digging **For Hard Rocky Soil**	EA	20				
7	Removal of Malba including Loading / Unloading on own vehicle. The payment shall be restricted to the quantity of sand laid.	CUM	1129				

BSES

8	Laying of underground cable in trench ,covering with RCC cable cover, covering with sand ,Sand cushion will be min 75mm below and 75mm above the cable, fixing of cable identification tags (9" X 4") at every 30 Mtrs, Laying of warning tape above 250mm of the docket, refilling the trench and ramming the surface & removal of malba if any, including watch and ward till charging of cable (This activity includes only labour jobs) for 66 KV cable Running Mtr	M	16800				
9	Fixing of Cable identification Tags	EA	496				
10	Providing and Laying Sand for cable route as per BRPL specification	CUM	1129				
11	Installation of RCC Cable Cover	EA	8273				
12	Installation of Warning Tape as per the Specification of BRPL	M	4964				
13	Laying of HDPE pipe of 225mm dia.of PN6 Class PE80 For crossing of roads by trenchless technology including required equipment, manpower & transport of equipment from one place to another.	M	2400				
14	Crossing of roads by trench-less technology by lying of HDPE pipe excluding supply of pipe .Laying by Pneumatic Jack Hammer Road Cutting. Lying . 200**mm dia.**	M	4400				
15	Installation, testing and commissioning of RFID active Electronic ball markers (for 33kV and 66kV joint)	EA	56				
16	Installation, testing and commissioning of RFID passive Electronic ball markers (for 33kV and 66kV joint)	EA	84				
17	Laying of 8" O.D. GI pipe for crossing small Nallas in the cable route.	M	72				
18	Jointing charges for Installing three phase Straight Through Joint including OFC Joint (66 kV)	EA	56				
19	66 kV three phase termination installation charges including OFC end seal/termination	EA	8				
20	Providing 1:2:4 concrete including supply of all required materials, labour curing etc. complete.	CUM	16				
21	Charges for providing continuous steel barricade including cost of all material plant consumables transport and labour for shifting placing painting and regular maintenance. As per new specification.	M	4000				

22	Survey and submission of Ground penetration report for entire Route.(pre and post of cable laying)	M	4000				
23	Charges for carrying out Route survey and identification of underground utilities of various civic agencies before/ during execution of scheme involving cable laying work. Route length will be considered for payment. Route length will be specifically verified by DGM.	M	16800				
24	Fabrication MS structure for different equipment like isolator, C.T.'s, P.T.'s, CVT, LA's etc., cable supporting structure including supply of nuts and bolts, consumables , welding electrode, and hacksaw blades etc. excluding supply of steel.	MT	4				
25	Erection of MS as well as galvanised structure for different equipment like isolator, C.T.'s, P.T.'s, CVT, LA's , ISO etc., cable supporting structure, 33kV/66 kV GI gantry structure , Tower Structure i/c consumables , welding electrode ,tack welding & hacksaw blades etc.	MT	3				
26	Painting of Fabrication MS Structure for diff.equip.	KG	4000				
27	Laying of MS flat in the excavated trench including risers, equipment earthing, overlapping of MS flat at the joints by twice of its width and welding of over lapping and cross joints including supply of electrodes, red oxide/bitumen compound , paint etcand Laying of GI earth strip for equipment earthing, along the wall, trench, cable trays etc. including fabrication of supports/cleats and fixing with wall bolts, welding works, painting of earth strip and riser with red oxide paint/bitumen compound and final. **For 50X6 sqmm**	M	500				
28	Excavation of trench below the ultimate good earth level in following type of soil including refilling after laying of earth mat riser, fixing of earth electrodes welding etc. **For Soft soil**	CUM	20				
29	Excavation of trench below the ultimate good earth level in following type of soil including refilling after laying of earth mat riser, fixing of earth electrodes welding etc. **For Semi rocky/rocky soil with providing of good earth**	CUM	20				

30	Digging of earth pit up to depth of 10 ft. in rocky/ semi rocky as per feasibility at site of embedding 600 x600mm earth plate with M.S Flate 50 x8 mm running the same through 3/4 " dia G.I. grouting pipe. Earth Plate to be covered by charcoal 200kg. And 100 Kg. Sodium chloride in the earth pit and refilling etc. NOTE: Charcoal, common salt, earth plate, G.I. Pipe, MS flat, Badarpur, Cement and bricks to be supplied by the contractor	EA	8				
31	Making of civil goomitties around GI earth pipe as per standard design of BSES. Supply of necessary bricks, cement, badarpur, sand, C1 cover of size 1'x1' and providing the same at the top of goomitties.	EA	8				
32	Grouting of cable mounting structure with cement concrete having ratio 1:3:6 including fixing with gantry structure. Badarpur, cement and stone ballast shall be supplied by contractor. **Suitable for mounting 33/66 KV cable.**	EA	4				
33	Mounting of 66KV,3x300sq.mm.XLPE cable with cable end box on the steel structure and fixing it with suitable wooden cleats (wooden cleats shall be supplied by contractor) i/c.its jumpering with the isolator as required.	EA	8				
34	Erection of electrical equipment Including supply of T & P, all consumable items such as welding rods, hacksaw blades etc and minor modification in support structure for fixing as required. **For 66 kV LA's with or without surge counter**	EA	6				
35	Laying of 40mm dia HDPE Duct in open trench	M	900				
36	Laying of Optical Fiber cable	M	900				
37	Splicing of 48F Optic Fiber Cable	EA	8				
38	Installation of LIU (OFC) with wall	EA	8				
39	Splicing Termination 48F Optical Fiber Cable at LIU	EA	8				
40	Testing and Commissioning of LDR	EA	4				
41	VLF High Voltage test as per IEEE 400.2	LS	1				
42	VLF Tan Delta as per IEEE 400.2	LS	1				
43	VLF Partial Discharge as per IEEE 400.2	LS	1				
44	Sheath integrity test	LS	1				

Scheme -2. Infeed from 220kV Vasant Kunj (Double Circuit) - 4 No. 66 KV 3CX300 mm2.

Supply

S.No	Item Description	UOM	Qty	Basic (Rs)	Freight (Rs)	GST (Rs)	Unit Landed (Rs)	Total Landed Cost (Rs)
1	CBL,PWR,300MM2;3C;66KV;ARMD, ofc embedded	M	28400					
2	KIT,JOINTG,66KV;3CX300MM2;HS, wih ofc joint	NOS	96					
3	KIT,TERM,HS O/D;66KV;3CX300MM2 wih OFC joint	NOS	12					
4	ARRSTR,ELEC,OUTDR ELEC;60KV;10KA	EA	6					
5	CHNL,STRCTL,ISMC100;100MM;50mm;7.7 mm	MT	6					
6	STRIP,MTLC,EARTHNG;50X6MM;MS GALVANIZED	KG	1000					
7	RLY,NUMERICAL,220VDC,DISTANCE,MICO MP543	NOS	4					
8	CVR,CBL;600X550X50MM;RCC	NOS	15334					
9	TAPE,SFTY BARR,150MM;PVC;DNGER 66KV BSES (WARNING TAPE)	M	9200					
10	MRKR,CBL;ELEC BAL MRKR PASSIVE	NOS	142					
11	MRKR,CBL;ELEC BAL MRKR ACTIVE	EA	96					
12	PI,SPL PUR,225MM;HDPE;PE80PN6;ROLLING	M	16000					
13	LUG,CRIMPING;50 0MM2;HVYDTY LG BRL	NOS	18					
14	CNDCTR,ACSR ZEBRA UNINSUL	M	60					
15	CLMP,PARRL GROV,ACSR GOAT CNDCTR	EA	6					
16	TAG,SFTY,RCTNGL;AL;MTLC	NOS	412					
17	Danger plates.	EA	8					
18	Number plates .	EA	8					
19	Providing and Fixing of Phase plates .	EA	8					
20	Circuit plates.	EA	8					
21	Galvanized Nut & Bolts	KG	100					
22	HDPE Duct-40mm (PN6,PE80)	M	800					
23	Optical Fiber Cable	M	1000					
24	Joint enclosure 48F Optic Fiber Cable	EA	8					
25	LIU	EA	8					
26	Cable Route/Joint Marker as per approved drawing. For 33/66 KV cables.	EA	166					
27	RCC Coffins for joint	EA	96					
28	wire mesh fencing 2.65 mtr height with gate frame of 3 mtr x 2.5 mtr with complete material eg angle,chain link,wire mesh and civil material etc complete as per specification,drawing no.Angle iron size 50x50x6 mm & MS strip 50 x 3 mm wire mesh 1"x3", 8 SWG wire to be used for wire-mesh with providing support at 1.25 distance.	SQM	96					

ETC

S.No	Item Description	UOM	Qty	Basic (Rs)	GST (Rs)	Unit Landed (Rs)	Total Landed Cost (Rs)
1	Digging of cable trench as per specification and drawings. Rate is inclusive of digging and backfilling. Measurement shall be as per actual depth excavated. **For Rocky Soil**	CUM	5265				
2	Digging of cable trench as per specification and drawings. Rate is inclusive of digging and backfilling. Measurement shall be as per actual depth excavated. **For Dense Carpeted bituminous Road.**	CUM	3705				
3	Digging of joint pit suitable for 33/66 KV cable joint box and covering the joint box with sand and providing protection as per BYPL/BRPL design. **For Hard Rocky Soil**	Cum	576				
4	Digging of joint pit suitable for 33/66 KV cable joint box and covering the joint box with sand and providing protection as per BYPL/BRPL design. **For Dense carpeted bituminous road.**	Cum	288				
5	Digging of test pits of requried size(not lessthan 1/2 Mtr. Wide at site for identification of cable route). Relevent volume shall be deducted from quantities of same item of cable digging **For Hard Rocky Soil**	EA	90				
6	Digging of test pits of required size(not less than 1/2 Mtr. Wide at site for identification of cable route). Relevent volume shall be deducted from quantities of same item of cable digging **For Dense carpeted bituminous road / CC Road**	EA	63				
7	Erection of electrical equipment Including supply of T & P, all consumable items such as welding rods, hacksaw blades etc and minor modification in support structure for fixing as required. **For 66 kV LA's with or witout surge counter**	EA	6				
8	Laying of underground cable in trench ,covering with RCC cable cover, covering with sand ,Sand cushion will be min 75mm below and 75mm above the cable, fixing of cable identification tags (9" X 4") at every 30 Mtrs, Laying of warning tape above 250mm of the docket, refilling the trench and ramming the surface & removal of malba if any, including watch and ward till charging of cable (This activity	M	28400				

	includes only labour jobs) **for 66 KV three core cable Running Mtr**						
9	Laying of MS flat in the excavated trench including risers, equipment earthing, overlapping of MS flat at the joints by twice of its width and welding of over lapping and cross joints including supply of electrodes, red oxide/bitumen compound , paint etcand Laying of GI earth strip for equipment earthing, along the wall, trench, cable trays etc including fabrication of supports/cleats and fixing with wall bolts, welding works, painting of earth strip and riser with red oxide paint/bitumen compound and final. **For 50X6 mm**	M	417				
10	Providing and laying in position specified grade of reinforced cement concrete excluding the cost of shuttering, centring, finishing and reinforcement-All work up to plinth level : 1:2:4 (1cement :2 coarse sand :4 graded stone agg.20mm nominal size.)	CUM	35				
11	Laying of HDPE pipe 225mm by trenchless	M	10000				
12	Crossing of roads by trench-less technology by laying of HDPE pipe excluding supply of pipe .Laying by Pneumatic Jack Hammer Road Cutting. Laying. **225mm dia.**	M	5600				
13	Laying of HDPE pipe for crossing small Nallas in the cable route or in the existing trenches	M	400				
14	Removal of Malba including Loading / Unloading on own vehicle. The payment shall be restricted to the quantity of sand laid.	CUM	1916				
15	Charges for carrying out Route survey and identification of underground utilities of various civic agencies before/ during execution of scheme involving cable laying work. Route length will be considered for payment. Route length will be specifically verified by DGM.	M	28400				
16	Survey and submission of Ground penetration (pre and post of cable laying)	M	7100				
17	Fabrication of MS structure as well as galvanised for different equipment like isolator, C.T.'s, P.T.'s, CVT, LA's etc, cable supporting structure including supply of nuts and bolts, consumables , welding electrode,	MT	7				

	hacksaw blades etc. excluding supply of steel.						
18	Erection of MS as well as galvanised structure for different equipment like isolator, C.T.'s, P.T.'s, CVT, LA's , ISO etc, cable supporting structure, 33kV/66 kV GI gantry structure , Tower Structure i/c consumables , welding electrode ,tack welding & hacksaw blades etc.	MT	6				
19	Painting of any M.S. Structure with one coat of Red oxide and two coats of AL. paint ISI marked including supply of paint by contractor.	Kg	6.4				
20	Digging of earth pit up to depth of 10 ft. in rocky/ semi rocky as per feasibility at site of embedding 600 x600mm earth plate with M.S Flate 50 x8 mm running the same through 3 or 4 " dia G.I. grouting pipe. Earth Plate to be covered by charcoal 200kg. And 100 Kg. Sodium chloride in the earth pit and refilling etc. NOTE: Charcoal, common salt, earth plate, G.I. Pipe, MS flat, Badarpur, Cement and bricks to be supplied by the contractor	EA	14				
21	Making of civil goomitties around GI earth pipe as per standard design of BSES. Supply of necessary bricks, cement, badarpur, sand, C1 cover of size 1'x1' and providing the same at the top of goomitties.	EA	14				
22	Grouting of cable mounting structure with cement concrete having ratio 1:3:6 including fixing with gantry structure. Badarpur, cement and stone ballast shall be supplied by contractor. Suitable for mounting 33/66 KV cable.	EA	4				
23	Mounting of 66KV,3Cx300sq.mm.XLPE cable with cable end box on the steel structure and fixing it with suitable wooden cleats (wooden cleats shall be supplied by contractor) i/c.its jumpering with the isolator as required	EA	16				
24	Charges for providing continuous steel barricade 1.2 mtr high including cost of all material plant consumables transport and labour for shifting placing painting and regular maintenance.40% qty for selected portion	M	4600				
25	Providing and Laying Sand cushioning for cable route as per BRPL specification and drawing.	CUM	1612				

26	Fixing of Danger plates.	EA	8				
27	Fixing of number plates .	EA	8				
28	Fixing of Phase plates .	EA	8				
29	Fixing of circuit plates .	EA	8				
30	Laying of 40mm dia HDPE Duct in open trench	M	800				
31	Laying of Optical Fiber cable	M	1000				
32	Splicing of 48F Optic Fiber Cable	EA	8				
33	Installation of LIU (OFC) with wall	EA	8				
34	Splicing Termination 48F Optical Fiber Cable at LIU	EA	8				
35	Testing and Commissioning of LDR	EA	4				
36	Installation of RCC Cable Cover	EA	15334				
37	ETC of Electronic Ball --Passive	EA	142				
38	ETC of Electronic Ball --ACTIVE	EA	96				
39	Installation of Warning Tape as per the Specification of BRPL	M	9200				
40	fixing of Cable Route/Joint Marker as per approved drawing. For 33/66 KV cables.	EA	166				
41	Installation of Cable Route/Joint marker	EA	166				
42	fixing of wire mesh fencing 2.65 mtr height with gate frame of 3 mtr x 2.5 mtr with complete material eg angle, chain link, wire mesh and civil material etc complete as per specification, drawing no. Angle iron size 50x50x6 mm & MS strip 50 x 3 mm wire mesh 1"x3", 8 SWG wire to be used for wire-mesh with providing support at 1.25 distances.	SQM	96				
43	Brick work with common burnt clay F.P.S. (non modular) bricks of class designation 7.5 in foundation and plinth in cement mortar 1 : 6 (1 cement : 6 coarse sand)	CUM	12.2				
44	12 mm cement plaster of mix 1:4 (1 cement : 4 fine sand)	Sqm	18				
45	15 mm cement plaster on rough side of single or half brick wall of mix 1:4 (1 cement : 4 fine sand)	Sqm	18				
46	Making of TERM KIT O/D 66KV 3Cx300MM2 XLPE	EA	12				
47	Making of JNT KIT S/T 66KV 3Cx300MM2 XLPE	EA	96				
48	VLF High Voltage test as per IEEE 400.2	LS	1				
49	VLF Tan Delta as per IEEE 400.2	LS	1				
50	VLF Partial Discharge as per IEEE 400.2	LS	1				
51	Sheath integrity test	LS	1				

BSES

Scheme -3. LILO of Vasant Kunj C Block to JNU circuit no 1 & 2 at 220 kV R K Puram by laying 12 nos 66 kV 1CX1000 SQMM XLPE Cables from 220 kV R K Puram to JNU..

Supply

S. No	Item Description	UOM	Qty	Basic (Rs)	Freight (Rs)	GST (Rs)	Unit Landed (Rs)	Total Landed Cost (Rs)
1	CBL,PWR,1000MM2;1C;66KV;AL	M	34200					
2	KIT,JOINTING,66KV1CX1000 MM2	EA	60					
3	TERM KIT HS I/D 66KV1CX1000 MM2 GIS (Male)	EA	12					
4	TERM KIT HS I/D 66KV1CX1000 MM2 GIS (Female)	EA	12					
5	TERM KIT HS O/D 66KV1CX1000 MM2	EA	12					
6	STRIP,MTLC,EARTHNG;50X6MM;MS GALVANIZED	KG	1000					
7	ANGL MTL EQ MS 65X65X6MM	MT	1					
8	CHANNEL,MOC:MS,SIZE:100X50X6MM	MT	5					
9	CNDCTR,ACSR ZEBRA UNINSUL	M	50					
10	LUG,CRIMPING;630MM2;HVYDTY LG BRL	EA	18					
11	ARRESTOR,LIGHTNING,ZINC OXIDE,66KV,10KA	EA	6					
12	RLY,NUMERICAL,220VDC,DISTANCE,MICO MP543	NOS	8					
13	RCC Slab (550X675) as per the specification of BRPL	EA	15666					
14	Warning Tape	M	9400					
15	HDPE pipes as per IS ,PN 6 class PE 80 - 180mm dia	M	18400					
16	RFID Electronic Passive Ball Marker 3M Make	EA	57					
17	RFID Electronic Active Ball Marker 3M Make	EA	60					
18	RCC Coffin for joint as per the specification of BRPL	EA	60					
19	Cable Route Marker as per the specification of BRPL	EA	57					
20	Cable Joint Marker as per the specification of BRPL	EA	5					
21	Trefoil Clamp (Dimension shall be suittable to adjust 3 Nos. 66kV 1X1000sqmm cable at every 1m--Aluminium)	EA	5466					
22	Earth Bonding Cable CU 3.3 KV 1X300SQMM	M	1680					
23	Cross bonding kit including all accessories	EA	60					
24	SVL & Link box including all accessories	EA	8					
25	Link box including all accessories without SVL	EA	20					
26	fencing around Link Box Panel including Locking arrangement and painting etc. as per drawing	NOS	10					
27	Link Box Panel along with Base structure including grouting etc. as per drawing	NOS	10					
28	Chemical Earthing	NOS	30					
29	SLNG,ROXYLON;ROXTEC;F/CBL SLNG	LOT	2					
30	HDPE Duct-40mm(PN-6,PE 80)	M	15960					

BSES

31	Optical Fiber Cable	M	16160					
32	RCC Chamber for OFC joints	EA	18					
33	Joint enclosure 48F Optic Fiber Cable	EA	42					
34	LIU	EA	8					
35	Cable identification Tags	EA	273					

ETC

S.No	Item Description	UOM	Qty	Basic (Rs)	GST (Rs)	Unit Landed (Rs)	Total Landed Cost (Rs)
1	Digging of cable trench as per specification and drawings. Rate is inclusive of digging and backfilling. Measurement shall be as per actual depth excavated. For Dense Carpeted bituminous Road.	CUM	1800				
2	Digging of joint pit suitable for 33/66 KV cable joint box and covering the joint box with sand and providing protection as per BYPL/BRPL design. **For Dense carpeted bituminous road.**	Cum	108				
3	Digging of test pits of required size(not less than 1/2 Mtr. Wide at site for identification of cable route). Relevent volume shall be deducted from quantities of same item of cable digging **For Dense carpeted bituminous road / CC Road**	EA	20				
4	Digging of cable trench as per specification and drawings. Rate is inclusive of digging and backfilling. Measurement shall be as per actual depth excavated. For Rocky Soil	CUM	3120				
5	Digging of joint pit suitable for 33/66 KV cable joint box and covering the joint box with sand and providing protection as per BYPL/BRPL design. **For Hard Rocky Soil**	Cum	432				
6	Digging of test pits of required size (not less than 1/2 Mtr. Wide at site for identification of cable route). Relevent volume shall be deducted from quantities of same item of cable digging **For Hard Rocky Soil**	EA	37				
7	Removal of Malba including Loading / Unloading on own vehicle. The payment shall be restricted to the quantity of sand laid.	CUM	1550				

BSES

8	Laying of underground cable in trench ,covering with RCC cable cover, covering with sand ,Sand cushion will be min 75mm below and 75mm above the cable, fixing of cable identification tags (9" X 4") at every 30 Mtrs, Laying of warning tape above 250mm of the docket, refilling the trench and ramming the surface & removal of malba if any, including watch and ward till charging of cable (This activity includes only labour jobs) **for 66 KV single core cable Running Mtr**	M	34200				
9	Fixing of Cable identification Tags	EA	273				
10	Sand for cable route as per BRPL specification	CUM	1148				
11	Installation of RCC Cable Cover	EA	15666				
12	Installation of Warning Tape as per the Specification of BRPL	M	9400				
13	Laying of HDPE pipe of 180mm dia.of PN6 Class PE80 For crossing of roads by trenchless technology including required equipment, manpower & transport of equipment from one place to another.	M	6000				
14	Crossing of roads by trench-less technology by laying of HDPE pipe excluding supply of pipe .Laying by Pneumatic Jack Hammer Road Cutting, Laying. 180**mm dia.**	M	11800				
15	Installation, testing and commissioning of RFID active Electronic ball markers (for 33kV and 66kV joint)	EA	60				
16	Installation, testing and commissioning of RFID passive Electronic ball markers (for 33kV and 66kV joint)	EA	57				
17	Laying of 8" O.D. GI/HDPE pipe for crossing small Nallas in the cable route.	M	600				
18	Charges of making 66kv, 1Cx1000SQ MM Straight through joints	EA	60				
19	Charges of Making O/D End termination Kit for 66kv, 1Cx1000SQ MM	EA	12				
20	Charges of Making of 66kv, 1Cx1000SQ MM GIS END TERMINATION KITS	EA	24				
21	Providing 1:2:4 concrete including supply of all required materials, labour curing etc. complete.	CUM	43.2				
22	Charges for providing continuous steel barricade including cost of all material plant consumables transport and labour for shifting placing painting and regular	M	2350				

	maintenance. As per new specification.						
23	Survey and submission of Ground penetration report for entire Route.	M	2850				
24	Charges for carrying out Route survey and identification of underground utilities of various civic agencies before/ during execution of scheme involving cable laying work. Route length will be considered for payment. Route length will be specifically verified by DGM.	M	11400				
25	Charges for Hi pot test - Testing equipment to be provided by the contractor. For 33 KV cables	EA	12				
26	Fabrication MS structure for different equipment like isolator, C.T.'s, P.T.'s, CVT, LA's etc, cable supporting structure including supply of nuts and bolts, consumables , welding electrode, hacksaw blades etc. excluding supply of steel.	MT	7				
27	Erection of MS as well as galvanised structure for different equipment like isolator, C.T.'s, P.T.'s, CVT, LA's , ISO etc, cable supporting structure, 33kV/66 kV GI gantry structure , Tower Structure i/c consumables , welding electrode ,tack welding & hacksaw blades etc.	MT	7				
28	Painting of Fabrication MS Structure for diff.equip.	KG	7000				
29	Digging of earth pit up to depth of 10 ft. in rocky/ semi rocky as per feasibility at site of embedding 600 x600mm earth plate with M.S Flate 50 x8 mm running the same through 3/4 " dia G.I. grouting pipe. Earth Plate to be covered by charcoal 200kg. And 100 Kg. Sodium chloride in the earth pit and refilling etc. NOTE: Charcoal, common salt, earth plate, G.I. Pipe, MS flat, Badarpur, Cement and bricks to be supplied by the contractor	EA	24				
30	Making of civil goomitties around GI earthpipe as per standard design of BSES. Supply of necessary bricks, cement, badarpur, sand, C1 cover of size 1'x1' and providing the same at the top of goomitties.	EA	24				

31	Grouting of cable mounting structure with cement concrete having ratio 1:3:6 including fixing with gantry structure. Badarpur, cement and stone ballast shall be supplied by contractor. **Suitable for mounting 33/66 KV cable.**	EA	10				
32	Mounting of 66KV,1x630sq.mm.XLPE cable with cable end box on the steel structure and fixing it with suitable wooden cleats (wooden cleats shall be supplied by contractor) i/c.its jumpering with the isolator as required.	EA	30				
33	Fixing of fencing around Link Box Panel including Locking arrangement and painting etc. as per drawing	NOS	10				
34	Installation of Link Box Panel along with Base structure including grouting etc. as per drawing	NOS	10				
35	ETC of Chemical Earthing	NOS	30				
36	Erection, Testing & Commissioning of Cross Bonding Kits, SVL & Link Box	EA	28				
37	ETC of Cable sealing	LOT	2				
38	Laying of 40mm dia HDPE Duct in open trench	M	9960				
39	Laying of Optical Fiber cable	M	16160				
40	Laying of 40mm dia, HDPE Duct through trenchless method using HDD machine	M	6000				
41	Installation of RCC Chamber for OFC joints	EA	18				
42	Splicing of 48F Optic Fiber Cable	EA	42				
43	Installation of LIU (OFC) with wall	EA	8				
44	Splicing Termination 48F Optical Fiber Cable at LIU	EA	8				
45	Testing and Commissioning of LDR	EA	8				
46	Protection erection (Annexure- A: detailed BOQ attached for renovation of 04 Nos 66 KV CRP)	EA	1				
47	Scada erection (Annexure- B: detailed BOQ attached for Adaptation of 04 nos renovated 66 KV CRP)	EA	1				
48	Civil Charges (Annexure- C: Detailed BOQ Attached)	LS	1				
49	VLF High Voltage test as per IEEE 400.2	LS	1				
50	VLF Tan Delta as per IEEE 400.2	LS	1				
51	VLF Partial Discharge as per IEEE 400.2	LS	1				
52	Sheath integrity test	LS	1				

Annexure -A, Protection				
S.No.	**DESCRIPTION**	**Make/Model**	**Unit**	**Qty**
1	Master Trip Relay220-250V dc with 6NO+2NC, Electrical Reset, Hand reset flag type; 1/4" Flush mounting type.	ABB/GE	NOS	8

2	DC Supvn Relay	ABB/GE	NOS	4
3	MFM		NOS	4
4	Trip Ckt Supvn Relay	ABB/GE	NOS	8
5	AC supervision relay	ABB/GE	NOS	4
6	Control Cable 6 Core		MTR	1000
7	Control Cable 10 Core		MTR	1000
8	70%- 120% of 50V VDC , At least 3NO+1NC medium duty contacts min 5A continuous , for contact multiplication of various Signals	Schneider	NOS	40
9	LED-RED (220Vdc)Indication lamp Colour- RED, 1.5W,Dia - 22.5 sq mm, suitable for 250V dc		NOS	20
10	LED-GREEN (220Vdc)Indication lamp Colour-Green, 1.5W,Dia - 22.5 sq mm, suitable for 250V dc		NOS	20
11	LED-WHITE (220Vdc)Indication lamp Colour-White, 1.5W, Dia - 22.5 sq mm, suitable for 250V dc		NOS	8
12	LED-AMBER (220Vdc)Indication lamp Colour- Amber, 1.5W,Dia - 22.5 sq mm, suitable for 250V dc		NOS	4
13	LED-AMBER (240Vac)Indication lamp Colour- Amber, 1.5W, Dia - 22.5 sq mm, suitable for 250V ac		NOS	4
14	LED-BLUE (220Vdc)Indication lamp Colour- Blue, 1.5W,Dia - 22.5 sq mm, suitable for 250V dc		NOS	4
15	LED-Red (63.5V AC)Indication lamp Colour- Blue, 1.5W, Dia - 22.5 sq mm, suitable for 63.5 ac		NOS	4
16	LED-yellow (63.5V AC)Indication lamp Colour- Blue, 1.5W, Dia - 22.5 sq mm, suitable for 63.5 ac		NOS	4
17	LED-Blue (63.5 V ac ac)Indication lamp Colour- Orange, 1.5W, Dia - 22.5 sq mm, suitable for 63.5 ac		NOS	4
18	RedWIRE,ELEC,FLEX;1.1KV;CU;PVC;2.5MM2	Polycab	MTR	400
19	YellowWIRE,ELEC,FLEX;1.1KV;CU;PVC;2.5MM2	Polycab	MTR	400
20	BlueWIRE,ELEC,FLEX;1.1KV;CU;PVC;2.5MM2	Polycab	MTR	400
21	BlackWIRE,ELEC,FLEX;1.1KV;CU;PVC;2.5MM2	Polycab	MTR	400
22	GreyWIRE,ELEC,FLEX;1.1KV;CU;PVC;2.5MM2	Polycab	MTR	2000
23	PVC Channel		MTR	180
24	TNC3 Position,4 Ways, Spring Return to Neutral, Pistol grip handle, Angular movement:45+45 deg, Size:75 X75 mm,Contacts:3C,3T.		NOS	4
25	PUSH BUTTONFlush Shrouded, Contacts:2NO+1NC, YELLOW Knob, Diameter: 22.5mm		NOS	4
26	TOGGLE SWITCH 250V 10A 2POLE		NOS	4
27	DOOR INTERLOCK/Limit switch 250VAC 10A		NOS	4
28	Disconnector typeCATDM4+		NOS	350
29	Non-Disconnecting TypeCATM4+		NOS	800
30	Foundation channel Base plate for Din rail		NOS	50
31	Din rail (Top Hat type) 35x7.5 sqmm.Zinc/Silver plated, Cr passivated. Supply should include 2 No.s of suitable end clamps per DIN Rail.		NOS	30
32	Din rail (G type) 32 mm.Zinc/Silver plated, Cr passivated. Supply should include 2 No.s of suitable end clamps per DIN Rail.		NOS	50
33	AC MCB, 2A, 4Pole , suitable for 110V ac,with a changeover type addon contact	L&T	NOS	4
34	DC MCB SUITABLE FOR 250V dc, 4A, DP	L&T	NOS	8
35	DC MCB SUITABLE FOR 250V DC, 16A, DP	L&T	NOS	8
36	DC MCB SUITABLE FOR 250V DC, 10A, DP	L&T	NOS	16
37	DC MCB SUITABLE FOR 250v DC, 6A, DP	L&T	NOS	12
38	AC MCB 6A, DP 250vAC	L&T	NOS	4
39	AC MCB SUITABLE FOR 440V AC,2A, DP, C Characteristics, 10kA	L&T	NOS	8

40	Space heater 80W, 240V ac		NOS	4
41	Thermostat30 to 90 deg, Rating: 15A, 230V AC		NOS	4
42	Universal Socket and Switch 5&15A box type		NOS	4
43	Tubular Compact Fluorescent lamp with fitting, 11W, 230V AC		NOS	4
44	Double compression Brass Glands of various sizes		NOS	60
45	25*6 Cu Earthing Strip with holes suitable to Screw 4 sq mm flexible wire		KG	1
46	L/R SW		NOS	4
47	SEMAPHORE with LED display		NOS	16
48	Front facia plate for CRP		NOS	4
49	Gland plate for CRP		Sqm	3
50	JNU & VKJ C BLOCK Grid Renovation , Retrofit of Control and Relay (CRP) as per scope of work (Sec 1.1). including SCADA engineer visit charges for a day		EA	4

Annexure- B:
SCADA Adaptation after replacement of 2 no's of 66KV CRP's at JNU and Vasant Kunj C block Grid station

Part-A: Supply

S.No.	Material	Make	unit	Qty
1	Ethernet Switch 16TX (FE) 8 FX (FE), MM LC type,2 TX (GbE) 2 FX(GbE) ,Aux Supply 48V DC	Ruggedcomm, Hirschmann	1	NOS
2	Ethernet Switch 6TX (FE) , 2 FX FE LC type ,2 TX (GbE) 2 FX(GbE),Managed ,Aux Supply 48V DC	Ruggedcomm, Hirschmann	1	NOS
3	Armoured RS485 cable	Beldon	100	M
4	DI cable 16 core ,1.5sqmm	KEI, Polycab/approved make	200	M
5	CAT 6 cable armoured	D -link, AMP, Beldon	200	M
6	2 core cable ,2.5sqmm	KEI, Polycab/approved make	100	M
7	FO Cable 6 fiber ,multimode, ARMD	preston/finolex/reputed make	100	M
8	CABLE TRAY, GI ,300,75mm,2.5mm	reputed make	20	M
9	GLAND, MS steel 1 INCH	comex	8	NOS
10	GLAND MS steel 1/2 INCH	r4	12	NOS
11	LIU 6 ports LC Type multimode, 19inch	preston/reputed make	2	NOS
12	FO Patch Cable ,3 M Multimode LC type	preston/reputed make	4	NOS
13	Ethernet Switch Panel Wall mounted,625mm(H)x600(W)x600(D)mm,2mm thickness	reputed /approved make	1	NOS

Part- B: Service

S.No.	Descriptions		Unit	Qty
1	Mounting of Ethernet Switch on wall		1	NOS
2	Fixing of cable tray		20	M
3	cable laying and tagging 16 core		360	M
4	cable laying and tagging 2 core		100	M
5	cable laying and tagging CAT6 cable , FO Cable etc		300	M
6	Crimping CAT 6 ,		24	NOS
7	GLANDING of DI, DO, CAT 6 , 2 CORE CABLE		40	NOS
8	Splicing of LIU pigtails to FO cable fibers		12	nos
9	FERRULING, Termination and proper dressing of all cables. All ferrules to be laminated with heat shrink tubes of appropriate size.		150	NOS
10	TRANSPORTATION		1	NOS
11	Miscellaneous work (civil work etc)for Cable tray laying etc		1	lot

Annexure-C: JNU Estimate Yard Development (Civil)			
S. No	**Description of item**	**Unit**	**Qty.**
1	Collecting the spreaded stone grit from yard, stacking at suitable places & relaying the same after proper screening/cleaning twice on the specified area of yard as per direction of engineer in charge	Cum	0.40
2	Demolishing flat brick flooring in cement mortar including stacking the serviceable material and disposal of unserviceable material within 50 m lead	Sqm	5.00
3	Demolishing cement concrete manually/ by mechanical means including disposal of material within 50 metres lead as per direction of engineer in charge. Nominal concrete: 1:3:6 or richer mix (i/c equivalent design mix)	Cum	0.50
4	Demolishing cement concrete manually/ by mechanical means including disposal of material within 50 metres lead as per direction of engineer in charge. Nominal concrete : 1:4:8 or leaner mix (i/c equivalent design mix)	Cum	0.50
5	Demolishing brick work manually /by mechanical means including stacking of serviceable material and disposal of unserviceable material within 50 metres lead as per direction of Engineer-In-charge.: In cement mortar	Cum	1.15
6	Removing mortar from bricks and cleaning bricks including stacking within a lead of 50 m. (stacks of cleaned bricks shall be measured): From brick work in cement mortar	Ea	115.00
7	Dismantling steel work in built up sections in angles, tees, flats and channels including all gusset plates, bolts, nuts, cutting rivets, welding etc. including dismembering and stacking within 50 m lead.	Kg	5.00
8	Fixing of old serviceable structural steel members by riveting, bolting, welding etc. including cutting, straightening as per requirement of site	Kg	2.00
9	Demolishing R.C.C. work manually /by mechanical means including stacking of steel bars and disposal of unserviceable material within 50 metres lead as per direction of Engineer-In-charge.	Cum	1.00
10	Extra for cutting reinforcement bars manually/ by mechanical means in R.C.C. or R.B. work (Payment shall be made on the cross sectional area of R.C.C. or R.B. work) as per direction of Engineer-In-charge.	Sqm	2.00
11	Clearing jungle including uprooting of rank vegetation, grass, brush wood, trees and saplings of girth upto 30 cm measured at a height of 1 m above ground level and removal of rubbish upto a distance of 50 m outside the periphery of the area cleared.	Sqm	225.00
12	Earth work in surface excavation not exceeding 30 cm in depth but exceeding 1.5 m in width as well as 10 Sqm on plan including disposal of excavated earth upto 50 m and lift upto 1.5 m, disposed soil to be levelled and neatly dressed : All kinds of soil.	Sqm	225.00
13	Earth work in excavation by mechanical means (hydraulic excavator)/ manual means over areas (exceeding 30 cm in depth. 1.5 m in width as well as 10 sqm on plan) including disposal of excavated earth, lead upto 50 m and lift upto 1.5 m, disposed earth to be levelled and neatly dressed : All kinds of soil.	CUM	90.00
14	Filling available excavated earth (excluding rock) in trenches plinth, sides of foundations etc. in layers not exceeding 20 cm in depth : consolidating Ea deposited layer by ramming and watering, lead upto 50 m and lift upto 1.5 m	CUM	9.00
15	Disposal of building rubbish / malba / similar unserviceable, dismantled or waste materials by mechanical means, including loading, transporting, unloading to approved municipal dumping ground or as approved by Engineer-in-charge, beyond 50 m initial lead, for all leads including all lifts involved.	Cum	1.00
16	Disposal of surplus earth by mechanical transport loading, unloading and stacking etc complete for all leads and lifts,	Cum	81.00

17	Providing and laying in position cement concrete of specified grade excluding the cost of centring and shuttering - All work up to plinth level : 1:4:8 (1 Cement : 4 coarse sand (zone-III) derived from natural sources : 8 graded stone aggregate 40 mm nominal size derived from natural sources)	CUM	1.00
18	Providing and laying in position specified grade of reinforced cement concrete, excluding the cost of centring, shuttering, finishing and reinforcement - All work up to plinth level : 1:1.5:3 (1 cement : 1.5 coarse sand (zone-III) derived from natural sources : 3 graded stone aggregate 20 mm nominal size derived from natural sources)	Cum	0.50
19	Brick work with common burnt clay F.P.S. (non modular) bricks of class designation 7.5 in foundation and plinth in cement mortar 1 : 6 (1 cement : 6 coarse sand)	CUM	1.15
20	Steel reinforcement for R.C.C. work including straightening, cutting, bending, placing in position and binding all complete upto plinth level. Cold twisted bars	KG	40.00
21	Providing and laying in position cement concrete of specified grade excluding the cost of centring and shuttering - All work up to plinth level : 1:5:10 (1 cement : 5 coarse sand (zone-III) derived from natural sources : 10 graded stone aggregate 40 mm nominal size derived from natural sources)	CUM	18.00
22	Flat brick flooring with over burnt bricks (chatka) on bed of 10 mm thick cement 1:6 (1 cement : 6 coarse sand) & filling the joints with same cement mortar	sqm	225.00
23	Supplying and spreading uniformly in yard of grid s/stn. blue stone aggregate 20 mm single size of good quality i/c loading, unloading for all leads & lifts complete, as per direction of Engineer in charge.	Cum	22.50
24	Cement plaster 1:3 (1Cement : 3 Coarse sand) finished with a floating coat of neat cement: 12 mm cement plaster.	Sqm	5.00
25	12 mm cement plaster of mix 1:4 (1 cement : 4 fine sand)	Sqm	5.00

BSES

Scheme -4. Laying of 02 nos 66 kV 3Cx300MM2 XLPE Cables(S/C) for providing additional circuit from 220KV PPK-1 to Bindapur Grid (G-3) & clubbing the existing two circuits into one comprising 2X3X1CX630 sqmm XLPE cable.

Supply

S.No	Item Description	UOM	Qty	Basic (Rs)	Freight (Rs)	GST (Rs)	Unit Landed (Rs)	Total Landed Cost (Rs)
1	CBL,PWR,300MM2;3C;66KV;AL	M	4000					
2	JNT KIT HS ST 66KV 3C 300MM2 XLPE	EA	14					
3	KIT,TERM,HS O/D;66KV;3CX300MM2	EA	4					
4	KIT,JOINTING,STGT;66KV;1CX630MM2;HS;RAY	NOS	6					
5	KIT,JOINTING,TERM;66KV;1X630MM2;HS;OD;RY	NOS	6					
6	CBL,PWR,630MM2;1CORE;66KV;AL	M	300					
7	ARRSTR,ELEC,OUTDR ELEC;60KV;10KA	EA	6					
8	ANGLE,STRCTL,65MM;65MM;6MM;MS	MT	0.5					
9	CHNL,STRCTL,ISMC100;100MM;50mm;7.7mm	MT	1					
10	STRIP,MTLC,EARTHNG;50X6MM;MS GALVANIZED	KG	500					
11	RLY,NUMERICAL,220VDC,DISTANCE,MICOMP543	NOS	2					
12	CONDUCTOR,ACSR,UN INSULATED,ZEBRA	M	90					
13	Cable Route/Joint Marker as per approved drawing. For 33/66 KV cables.	EA	54					
14	RCC Coffin for joint as per the specification of BRPL	EA	14					
15	circuit plates .	EA	8					
16	Galvanized Nut & Bolts	KG	250					
17	TAPE,SFTY BARR,150MM;PVC;DNGER 66KV BSES (WARNING TAPE)	M	1580					
18	TAG,SFTY,RCTNGL;AL;MTLC	NOS	312					
19	CVR,CBL;600X550X50MM;RCC	NOS	1505					
20	MRKR,CBL;ELEC BAL MRKR PASSIVE	NOS	63					
21	MRKR,CBL;ELEC BAL MRKR ACTIVE	EA	14					
22	PI,SPL PUR,225MM;HDPE;PE80PN6;ROLLING	M	2400					
23	Optical Fiber Cable	M	1600					
24	40 mm HDPE duct	M	1560					
25	Joint enclosure 48F Optic Fiber Cable	EA	4					
26	Number plate, PLT,MTLC, RECTANGULAR;AL;NUMBER,	EA	8					
27	Danger Plate, BRD,SIGN,DANGER 66000V	EA	8					
28	Phase Plate in Set of red Blue & Yellow, PLT,MTLC,RECTANGULAR;PHASE R Y B	SETS	12					
29	LIU	EA	4					
30	Patch cord	EA	4					

ETC

S.No	Item Description	UOM	Qty	Basic (Rs)	GST (Rs)	Unit Landed (Rs)	Total Landed Cost (Rs)

1	Digging of cable trench as per specification and drawings. Rate is inclusive of digging and backfilling. Measurement shall be as per actual depth excavated. For Dense Carpeted bituminous Road.	CUM	2916				
2	Digging of joint pit suitable for 33/66 KV cable joint box and covering the joint box with sand and providing protection as per BYPL/BRPL design. For Dense carpeted bituminous road.	CUM	210				
3	Digging of test pits of required size(not less than 1/2 Mtr. Wide at site for identification of cable route). Relevent volume shall be deducted from quantities of same item of cable digging For Dense carpeted bituminous road / CC Road	EA	100				
4	Grouting of cable mounting structure with cement concrete having ratio 1:3:6 including fixing with gantry structure. Badarpur, cement and stone ballast shall be supplied by contractor. Suitable for mounting 33/66 KV cable.	EA	2				
5	Removal of Malba including Loading / Unloading on own vehicle. The payment shall be restricted to the quantity of sand laid.	CUM	981				
6	Laying of underground cable in trench ,covering with RCC cable cover, covering with sand ,Sand cushion will be min 75mm below and 75mm above the cable, fixing of cable identification tags (9" X 4") at every 30 Mtrs, Laying of warning tape above 250mm of the docket, refilling the trench and ramming the surface & removal of malba if any, including watch and ward till charging of cable (This activity includes only labour jobs) for 66 KV three core cable Running Mtr	M	4000				
7	Providing and Laying Sand cushioning for cable route as per BRPL specification and drawing.	CUM	312				
8	Laying of underground cable in trench ,covering with RCC cable cover, covering with sand ,Sand cushion will be min 75mm below and 75mm above the cable, fixing of cable identification tags (9" X 4") at every 30 Mtrs, Laying of warning tape above 250mm of the docket, refilling the trench and ramming the surface & removal of malba if any, including watch and ward till charging of cable (This activity includes only labour jobs) **for 66 KV single core cable Running Mtr**	M	300				
9	Fixing of Cable Route/Joint Marker as per approved drawing. For 33/66 KV cables.	EA	54				

10	fixing of circuit plates .	EA	8				
11	Laying of HDPE pipe of 225mm dia.of PN6 Class PE80 For crossing of roads by trenchless technology including required equipment, manpower & transport of equipment from one place to another.	M	800				
12	Crossing of roads by trench-less technology by laying of HDPE pipe excluding supply of pipe .Laying by Pneumatic Jack Hammer Road Cutting. laying . 225 **mm dia.**	M	0				
13	Laying of HDPE pipe for crossing small Nallas in the cable route or in the existing trenches	M	1600				
14	Providing and laying in position specified grade of reinforced cement concrete excluding the cost of shuttering, centring, finishing and reinforcement-All work up to plinth level : 1:2:4 (1cement :2 coarse sand :4 graded stone agg.20mm nominal size.)	CUM	8				
15	Charges for Hi pot test - Testing equipment to be provided by the contractor. For 66 KV cables	EA	2				
16	Fabrication of MS structure as well as galvanised for different equipment like isolator, C.T.'s, P.T.'s, CVT, LA's etc, cable supporting structure including supply of nuts and bolts, consumables , welding electrode, hacksaw blades etc. excluding supply of steel.	MT	2				
17	Erection of MS as well as galvanised structure for different equipment like isolator, C.T.'s, P.T.'s, CVT, LA's , ISO etc, cable supporting structure, 33kV/66 kV GI gantry structure , Tower Structure i/c consumables , welding electrode ,tack welding & hacksaw blades etc.	MT	2				
18	Painting of any M.S.Structure with one coat of Red oxide and two coats of AL. paint ISI marked including supply of paint by contractor.	KG	2000				
19	Digging of earth pit up to depth of 10 ft. in rocky/ semi rocky as per feasibility at site of embedding 600 x600mm earth plate with M.S Flate 50 x8 mm running the same through 3/4 " dia G.I. grouting pipe. Earth Plate to be covered by charcoal 200kg. And 100 Kg. Sodium chloride in the earth pit and refilling etc. NOTE: Charcoal, commons alt, earth plate, G.I. Pipe, MS flat, Badarpur, Cement and bricks to be supplied by the contractor	EA	4				

20	Making of civil goomitties around GI earth pipe as per standard design of BSES. Supply of necessary bricks, cement, badarpur, sand, C1 cover of size 1'x1' and providing the same at the top of goomitties.	EA	4				
21	Charges for providing continuous steel barricade 1.2 mtr high including cost of all material plant consumables transport and labour for shifting placing painting and regular maintenance.40% qty for selected portion	M	2000				
22	Mounting of 66KV,3x300sq.mm.XLPE cable with cable end box on the steel structure and fixing it with suitable wooden cleats (wooden cleats shall be supplied by contractor) i/c.its jumpering with the isolator as required.	EA	4				
23	Charges for carrying out Route survey and identification of underground utilities of various civic agencies before/ during execution of scheme involving cable laying work. Route length will be considered for payment. Route length will be specifically verified by DGM.	M	2000				
24	Survey and submission of Ground penetration report for entire Route.	M	2000				
25	Detail survey i/c. preparation of site plan & profile.	KM	2				
26	Erection of electrical equipment Including supply of T & P, all consumable items such as welding rods, hacksaw blades etc and minor modification in support structure for fixing as required. For 66 kV LA's with or without surge counter	EA	6				
27	Sringing and sagging of main bus and cover bus bar with ACSR Zebra conductor and Jumpering of various electrical equipment by ACSR Zebra conductor in between equipment to equipment of any length required and from bus bar to equipment of any length required with the help of PG clamps, T connectors and other clamps. For 66 kV /33KV Yard	M	90				
28	Excavation of trench below the ultimate good earth level in following type of soil including refilling after laying of eath mat riser, fixing of earth electrodes welding etc. For Soft soil	CUM	215				

29	Laying of MS flat in the excavated trench including risers, equipment earthing, overlapping of MS flat at the joints by twice of its width and welding of over lapping and cross joints including supply of electrodes, red oxide/bitumen compound , paint etcand Laying of GI earth strip for equipment earthing, along the wall, trench, cable trays etc including fabrication of supports/cleats and fixing with wall bolts, welding works, painting of earth strip and riser with red oxide paint/bitumin compound and final. **For 50X6 sqmm**	M	178				
30	Installation of RCC Cable Cover	EA	1505				
31	Installation of Warning Tape as per the Specification of BRPL	M	1580				
32	Installation of single 66KV STRAIGHT THROUGH JOINTING KITS 3X300 SQMM XLPE with OFC kit	NOS	14				
33	Installation of single 66KV END TERMINATION KITS - OUTDOOR 3X300 SQMM XLPE, with OFC kit	NOS	4				
34	Installation of single 66KV STRAIGHT THROUGH JOINTING KITS 1X630 SQMM XLPE	NOS	6				
35	Installation of single 66KV END TERMINATION KITS - OUTDOOR 1X630 MM2 XLPE	NOS	6				
36	Installation, testing and commissioning of RFID active Electronic ball markers (for 33kV and 66kV joint)	EA	14				
37	Installation, testing and commissioning of RFID passive Electronic ball markers (for 33kV and 66kV joint)	EA	63				
38	laying of optical fibre cable	M	1600				
39	Laying of 40mm dia HDPE Duct in open trench	M	1560				
40	Splicing of 48F Optic Fiber Cable	EA	4				
41	Installation of LIU (OFC) with wall	EA	4				
42	Splicing Termination 48F Optical Fiber Cable at LIU	EA	4				
43	installation of LDR	EA	2				
44	VLF High Voltage test as per IEEE 400.2	LS	1				
45	VLF Tan Delta as per IEEE 400.2	LS	1				
46	VLF Partial Discharge as per IEEE 400.2	LS	1				
47	Sheath integrity test as per IEEE 400.2	LS	1				

Scheme -5. Laying of 02 nos 66 kV 3Cx300MM2 XLPE Cables(S/C) for providing additional circuit from 220KV PPK-1 to G-2 Grid & clubbing the existing two circuits into one comprising 2X3X1CX630 sqmm XLPE cable.

Supply

S. No	Item Description	UOM	Qty	Basic (Rs)	Freight (Rs)	GST (Rs)	Unit Landed (Rs)	Total Landed Cost (Rs)
1	CBL,PWR,300MM2;3C;66KV;AL, ofc embedded	M	6000					
2	JNT KIT HS ST 66KV 3C 300MM2 XLPE, ofc embedded	EA	20					
3	KIT,TERM,HS O/D;66KV;3CX300MM2 with compatible with ofc	EA	4					
4	KIT,JOINTING,STGT;66KV;1CX630MM2;HS;RAYwith compatible with ofc	NOS	6					
5	KIT,JOINTING,TERM;66KV;1X630MM2;HS;OD;RY,with compatible with ofc	NOS	6					
6	CBL,PWR,630MM2;1CORE;66KV;AL	M	300					
7	ARRSTR,ELEC,OUTDR ELEC;60KV;10KA	EA	6					
8	ANGLE,STRCTL,65MM;65MM;6MM;MS	MT	0.5					
9	CHNL,STRCTL,ISMC100;100MM;50mm;7.7mm	MT	1					
10	STRIP,MTLC,EARTHNG;50X6MM;MS GALVANIZED	KG	500					
11	RLY,NUMERICAL,220VDC,DISTANCE,MICOMP 543	NOS	2					
12	CONDUCTOR,ACSR,UN INSULATED,ZEBRA	M	90					
13	Cable Route/Joint Marker as per approved drawing. For 33/66 KV cables.	EA	80					
14	circuit plates .	EA	8					
15	Galvanized Nut & Bolts	KG	250					
16	Optical Fiber Cable	M	1600					
17	40 mm HDPE duct(PN 6, PE 80)	M	1560					
18	Joint enclosure 48F Optic Fiber Cable	EA	4					
19	RCC Coffin for joint as per the specification of BRPL	EA	20					
20	TAPE,SFTY BARR,150MM;PVC;DNGER 66KV BSES (WARNING TAPE)	M	2180					
21	TAG,SFTY,RCTNGL;AL;MTLC	NOS	512					
22	CVR,CBL;600X550X50MM;RCC	NOS	2470					
23	MRKR,CBL;ELEC BAL MRKR PASSIVE	NOS	87					
24	Supply of MRKR,CBL;ELEC BAL MRKR ACTIVE	EA	20					
25	PI,SPL PUR,225MM;HDPE;PE80PN6;ROLLING	M	3400					
26	Galvanized Nut & Bolts	KG	250					
27	Number plate, PLT,MTLC, RECTANGULAR;AL;NUMBER,	EA	8					
28	Danger Plate, BRD,SIGN,DANGER 66000V	EA	8					
29	Phase Plate in Set of red Blue & Yellow, PLT,MTLC,RECTANGULAR;PHASE R Y B	SETS	12					
30	LIU	EA	4					
31	patch cord	EA	4					

ETC

S.No	Item Description	UOM	Qty	Basic (Rs)	GST (Rs)	Unit Landed (Rs)	Total Landed Cost (Rs)
1	Digging of cable trench as per specification and drawings. Rate is inclusive of digging and backfilling. Measurement shall be as per actual depth excavated . For Dense Carpeted bituminous Road.	CUM	3456				
2	Digging of joint pit suitable for 33/66 KV cable joint box and covering the joint box with sand and providing protection as per BYPL/BRPL design. For Dense carpeted bituminous road.	CUM	300				
3	Digging of test pits of required size(not less than 1/2 Mtr. Wide at site for identification of cable route). Relevent volume shall be deducted from quantities of same item of cable digging For Dense carpeted bituminous road / CC Road	EA	100				
4	Grouting of cable mounting structure with cement concrete having ratio 1:3:6 including fixing with gantry structure. Badarpur, cement and stone ballast shall be supplied by contractor. Suitable for mounting 33/66 KV cable.	EA	2				
5	Removal of Malba including Loading / Unloading on own vehicle. The payment shall be restricted to the quantity of sand laid.	CUM	981				
6	Laying of underground cable in trench ,covering with RCC cable cover, covering with sand ,Sand cushion will be min 75mm below and 75mm above the cable, fixing of cable identification tags (9" X 4") at every 30 Mtrs, Laying of warning tape above 250mm of the docket, refilling the trench and ramming the surface & removal of malba if any, including watch and ward till charging of cable (This activity includes only labour jobs) for 66 KV three core cable Running Mtr	M	6000				
7	Providing and Laying Sand cushioning for cable route as per BRPL specification and drawing.	CUM	512				

8	Laying of underground cable in trench ,covering with RCC cable cover, covering with sand ,Sand cushion will be min 75mm below and 75mm above the cable, fixing of cable identification tags (9" X 4") at every 30 Mtrs, Laying of warning tape above 250mm of the docket, refilling the trench and ramming the surface & removal of malba if any, including watch and ward till charging of cable (This activity includes only labour jobs) **for 66 KV single core cable Running Mtr**	M	300				
9	Fixing of Cable Route/Joint Marker as per approved drawing. For 33/66 KV cables.	EA	80				
10	Fixing of circuit plates .	EA	8				
11	Laying of HDPE pipe of 225mm dia.of PN6 Class PE80 For crossing of roads by trenchless technology including required equipment, manpower & transport of equipment from one place to another.	M	1600				
12	Crossing of roads by trench-less technology by laying of HDPE pipe excluding supply of pipe .Laying by Pneumatic Jack Hammer Road Cutting. laying . 225 **mm dia.**	M	600				
13	Laying of HDPE pipe for crossing small Nallas in the cable route or in the existing trenches	M	1200				
14	Providing and laying in position specified grade of reinforced cement concrete excluding the cost of shuttering, centring, finishing and reinforcement-All work up to plinth level : 1:2:4 (1cement :2 coarse sand :4 graded stone agg.20mm nominal size.)	CUM	12				
15	Charges for Hi pot test - Testing equipment to be provided by the contractor. For 66 KV cables	EA	2				
16	Fabrication of MS structure as well as galvanised for different equipment like isolator, C.T.'s, P.T.'s, CVT, LA's etc, cable supporting structure including supply of nuts and bolts, consumables , welding electrode, hacksaw blades etc. excluding supply of steel.	MT	3.0				
17	Erection of MS as well as galvanised structure for different equipment like isolator, C.T.'s, P.T.'s, CVT, LA's , ISO etc, cable supporting structure, 33kV/66 kV GI gantry structure , Tower Structure i/c consumables ,	MT	3.0				

	welding electrode ,tack welding & hacksaw blades etc.						
18	Painting of any M.S. Structure with one coat of Red oxide and two coats of AL. paint ISI marked including supply of paint by contractor.	KG	3000				
19	Digging of earth pit up to depth of 10 ft. in rocky/ semi rocky as per feasibility at site of embedding 600 x600mm earth plate with M.S Flate 50 x8 mm running the same through 3/4 " dia G.I. grouting pipe. Earth Plate to be covered by charcoal 200kg. And 100 Kg. Sodium chloride in the earth pit and refilling etc. NOTE: Charcoal, common salt, earth plate, G.I. Pipe, MS flat, Badarpur, Cement and bricks to be supplied by the contractor	EA	4				
20	Making of civil goomitties around GI earth pipe as per standard design of BSES. Supply of necessary bricks, cement, badarpur, sand, C1 cover of size 1'x1' and providing the same at the top of goomitties.	EA	4				
21	Charges for providing continuous steel barricade 1.2 mtr high including cost of all material plant consumables transport and labour for shifting placing painting and regular maintenance.40% qty for selected portion	M	3000				
22	Mounting of 66KV,3x300 sq.mm. XLPE cable with cable end box on the steel structure and fixing it with suitable wooden cleats (wooden cleats shall be supplied by contractor) i/c.its jumpering with the isolator as required.	EA	4				
23	Charges for carrying out Route survey and identification of underground utilities of various civic agencies before/ during execution of scheme involving cable laying work. Route length will be considered for payment. Route length will be specifically verified by DGM.	M	3000				
24	Survey and submission of Ground penetration report for entire Route.	M	3000				
25	Detail survey i/c. prepration of site plan & profile.	KM	3				

26	Erection of electrical equipment Including supply of T & P, all consumable items such as welding rods, hacksaw blades etc and minor modification in support structure for fixing as required. For 66 kV LA's with or without surge counter	EA	6.00				
27	Sringing and sagging of main bus and cover bus bar with ACSR Zebra conductor and Jumpering of various electrical equipment by ACSR Zebra conductor in between equipment to equipment of any length required and from bus bar to equipment of any length required with the help of PG clamps, T connectors and other clamps. For 66 kV /33KV Yard	M	90.00				
28	Excavation of trench below the ultimate good earth level in following type of soil including refilling after laying of eath mat riser, fixing of earth electrodes welding etc. For Soft soil	CUM	215.00				
29	Laying of MS flat in the excavated trench including risers, equipment earthing, overlapping of MS flat at the joints by twice of its width and welding of over lapping and cross joints including supply of electrodes, red oxide/bitumen compound , paint etcand Laying of GI earth strip for equipment earthing, along the wall, trench, cable trays etc including fabrication of supports/cleats and fixing with wall bolts, welding works, painting of earth strip and riser with red oxide paint/bitumen compound and final. **For 50X6 sqmm**	M	178				
30	Installation of RCC Cable Cover	EA	2470				
31	Installation of Warning Tape as per the Specification of BRPL	M	2180				
32	Installation of single 66KV STRAIGHT THROUGH JOINTING KITS 3X300 SQMM XLPE with OFC kit	NOS	20				
33	Installation of single 66KV END TERMINATION KITS - OUTDOOR 3X300 SQMM XLPE, with OFC kit	NOS	4				
34	Installation of single 66KV STRAIGHT THROUGH JOINTING KITS 1X630 SQMM XLPE	NOS	6				
35	Installation of single 66KV END TERMINATION KITS - OUTDOOR 1X630 MM2 XLPE	NOS	6				
36	Installation, testing and commissioning of RFID active Electronic ball markers (for 33kV and 66kV joint)	EA	20				

37	Installation, testing and commissioning of RFID passive Electronic ball markers (for 33kV and 66kV joint)	EA	87				
38	laying of optical fibre cable	M	1600				
39	Laying of 40mm dia HDPE Duct in open trench	M	1560				
40	Splicing of 48F Optic Fiber Cable	EA	4				
41	Installation of LIU (OFC) with wall	EA	4				
42	Splicing Termination 48F Optical Fiber Cable at LIU	EA	4				
43	installation of LDR	EA	2				
44	VLF High Voltage test as per IEEE 400.2	LS	1				
45	VLF Tan Delta as per IEEE 400.2	LS	1				
46	VLF Partial Discharge as per IEEE 400.2	LS	1				
47	Sheath integrity test	LS	1				

Scheme -6. Conversion of 66kV O/H S/C T/L from Pankha Road - Sagarpur Circuit (from Pankha Road Grid to Sagarpur Grid) with Route Length - 3100M & And 66kV O/H T-off Circuit of PPk-1 to Rewari Line(Dabri Crossing to Pankha Road) by laying of 02 Nos. 66KV 3Cx300sq.mm.

Supply

S. No	Item Description	UOM	Qty	Basic (Rs)	Freight (Rs)	GST (Rs)	Unit Landed (Rs)	Total Landed Cost (Rs)
1	CBL,PWR,300MM2;3C;66KV;ARMD, OFC Embedded	M	9000					
2	KIT,JOINTG,66KV;3CX300MM2;HS, OFC Copartable	NOS	34					
3	KIT,TERM,HS O/D;66KV;3CX300MM2, OFC Copartable	NOS	12					
4	ARRSTR,ELEC,OUTDR ELEC;60KV;10KA	EA	12					
5	ANGLE,STRCTL,50MM;50MM;6MM;MS	KG	1000					
6	RLY,NUMERICAL,220VDC,DISTANCE,MICOMP543	NOS	2					
7	CHNL,STRCTL,ISMC100;100MM;50mm;7.7 mm	MT	3					
8	STP,MTLC,EARTHING;50X6MM;GI	KG	2200					
9	ISOLATOR,ELEC,66KV;2000AMPS;W/O E SW	NOS	2					
10	ANGLE,STRCTL,65MM;65MM;6MM;MS	MT	2					
11	ANGLE,STRCTL,75MM;75MM;6MM;IS2062	MT	0.5					
12	CNDCTR,ACSR ZEBRA UNINSUL	M	120					
13	CLMP,PARRL GROV,ACSR ZEBRA CNDCTR	NOS	18					
14	LUG,CRIMPING;630MM2;HVYDTY LG BRL	EA	18					
15	Number plate, PLT,MTLC, RECTANGULAR;AL;NUMBER,	EA	12					
16	Danger Plate, BRD,SIGN,DANGER 66000V	EA	12					
17	Phase Plate in Set of red Blue & Yellow, PLT,MTLC,RECTANGULAR;PHASE R Y B	SETS	10					
18	TAPE,SFTY BARR,150MM;PVC;DNGER 66KV BSES (WARNING TAPE)	M	3390					

19	TAG,SFTY,RCTNGL;AL;MTLC	NOS	640					
20	CVR,CBL;600X550X50MM;RCC	NOS	3352					
21	MRKR,CBL;ELEC BAL MRKR PASSIVE	NOS	146					
22	MRKR,CBL;ELEC BAL MRKR ACTIVE	EA	34					
23	PI,SPL PUR,225MM;HDPE;PE80PN6;ROLLING	M	5200					
24	Cable Route/Joint Marker as per approved drawing. For 33/66 KV cables.	EA	106					
25	RCC Coffin for joint as per the specification of BRPL	EA	34					
26	Galvanized Nut & Bolts	KG	330					
27	Circuit plates .	EA	8					
28	wire mesh fencing 2.65 mtr height with gate frame of 3 mtr x 2.5 mtr with complete material including painting eg angle,chain link,wire mesh and civil material etc complete as per specification, drawing no.Angle iron size 50x50x6 mm & MS strip 50 x 3 mm wire mesh 1"x3", 8 SWG wire to be used for wire-mesh with providing support at 1.25 distance.	SQM	108					
29	Optical Fiber Cable	M	1000					
30	40 mm HDPE duct	M	960					
31	Joint enclosure 48F Optic Fiber Cable	EA	4					
32	LIU	EA	4					

ETC

S.No	Item Description	UOM	Qty	Basic (Rs)	GST (Rs)	Unit Landed (Rs)	Total Landed Cost (Rs)
1	Digging of cable trench as per specification and drawings. Rate is inclusive of digging and backfilling. Measurement shall be as per actual depth excavated. For Dense Carpeted bituminous Road.	CUM	4698				
2	Digging of joint pit suitable for 33/66 KV cable joint box and covering the joint box with sand and providing protection as per BYPL/BRPL design. For Dense carpeted bituminous road.	CUM	480				
3	Digging of test pits of required size(not less than 1/2 Mtr. Wide at site for identification of cable route). Relevent volume shall be deducted from quantities of same item of cable digging For Dense carpeted bituminous road / CC Road	EA	125				
4	Grouting of cable mounting structure with cement concrete having ratio 1:3:6 including fixing with gantry structure. Badarpur, cement and stone ballast shall be supplied by contractor. Suitable for mounting 33/66 KV cable.	EA	5				

5	Removal of Malba including Loading / Unloading on own vehicle. The payment shall be restricted to the quantity of sand laid.	CUM	1301				
6	Laying of underground cable in trench ,covering with RCC cable cover, covering with sand ,Sand cushion will be min 75mm below and 75mm above the cable, fixing of cable identification tags (9" X 4") at every 30 Mtrs, Laying of warning tape above 250mm of the docket, refilling the trench and ramming the surface & removal of malba if any, including watch and ward till charging of cable (This activity includes only labour jobs) for 66 KV three core cable Running Mtr	M	9000				
7	Providing and Laying Sand cushioning for cable route as per BRPL specification and drawing.	CUM	758				
8	fixing of Cable Route/Joint Marker as per approved drawing. For 33/66 KV cables.	EA	106				
9	Fixing of circuit plates .	EA	8				
10	fixing of wire mesh fencing 2.65 mtr height with gate frame of 3 mtr x 2.5 mtr with complete material including painting eg angle,chain link,wire mesh and civil material etc complete as per specification,drawing no.Angle iron size 50x50x6 mm & MS strip 50 x 3 mm wire mesh 1"x3", 8 SWG wire to be used for wire-mesh with providing support at 1.25 distance.	SQM	108				
11	Laying of HDPE pipe of 225mm dia.of PN6 Class PE80 For crossing of roads by trenchless technology including required equipment, manpower & transport of equipment from one place to another.	M	2200				
12	Crossing of roads by trench-less technology by laying of HDPE pipe excluding supply of pipe .Laying by Pneumatic Jack Hammer Road Cutting. laying . 225 **mm dia.**	M	1400				
13	Laying of HDPE pipe for crossing small Nallas in the cable route or in the existing trenches	M	1600				
14	Providing and laying in position specified grade of reinforced cement concrete excluding the cost of shuttering, centring, finishing and reinforcement-All work up to plinth level : 1:2:4 (1cement :2 coarse sand :4 graded stone agg.20mm nominal size.)	CUM	20				

BSES

15	Fabrication of MS structure as well as galvanised for different equipment like isolator, C.T.'s, P.T.'s, CVT, LA's etc, cable supporting structure including supply of nuts and bolts, consumables , welding electrode, hacksaw blades etc. excluding supply of steel.	MT	6.5				
16	Erection of MS as well as galvanised structure for different equipment like isolator, C.T.'s, P.T.'s, CVT, LA's , ISO etc, cable supporting structure, 33kV/66 kV GI gantry structure , Tower Structure i/c consumables , welding electrode ,tack welding & hacksaw blades etc.	MT	6.3				
17	Painting of any M.S. Structure with one coat of Red oxide and two coats of AL. paint ISI marked including supply of paint by contractor.	KG	7300				
18	Digging of earth pit up to depth of 10 ft. in rocky/ semi rocky as per feasibility at site of embedding 600 x600mm earth plate with M.S Flate 50 x8 mm running the same through 3/4 " dia G.I. grouting pipe. Earth Plate to be covered by charcoal 200kg. And 100 Kg. Sodium chloride in the earth pit and refilling etc. NOTE: Charcoal, common salt, earth plate, G.I. Pipe, MS flat, Badarpur, Cement and bricks to be supplied by the contractor	EA	22				
19	Making of civil goomitties around GI earth pipe as per standard design of BSES. Supply of necessary bricks, cement, badarpur, sand, C1 cover of size 1'x1' and providing the same at the top of goomitties.	EA	22				
20	Charges for providing continuous steel barricade 1.2 mtr high including cost of all material plant consumables transport and labour for shifting placing painting and regular maintenance.40% qty for selected portion	M	4100				
21	Mounting of 66KV,3x300 sq.mm.XLPE cable with cable end box on the steel structure and fixing it with suitable wooden cleats (wooden cleats shall be supplied by contractor) i/c.its jumpering with the isolator as required.	EA	12				
22	Charges for carrying out Route survey and identification of underground utilities of various civic agencies before/ during execution of scheme involving cable laying work. Route length will be considered for payment. Route length will be specifically verified by DGM.	M	4500				

23	Survey and submission of Ground penetration report for entire Route (before and after of cable laying)	M	4500				
24	Detail survey i/c. preparation of site plan & profile.	KM	4.5				
25	Erection of electrical equipment Including supply of T & P, all consumable items such as welding rods, hacksaw blades etc and minor modification in support structure for fixing as required. For 66 kV LA's with or without surge counter	EA	12				
26	ETC of Horizontally Rotating double break motorized isolators with one earth switch	EA	2				
27	Sringing and sagging of main bus and cover bus bar with ACSR Zebra conductor and Jumpering of various electrical equipment by ACSR Zebra conductor in between equipment to equipment of any length required and from bus bar to equipment of any length required with the help of PG clamps, T connectors and other clamps. For 66 kV /33KV Yard	M	120				
28	Excavation of trench below the ultimate good earth level in following type of soil including refilling after laying of eath mat riser, fixing of earth electrodes welding etc. For Soft soil	CUM	218				
29	Laying of MS flat in the excavated trench including risers, equipment earthing, overlapping of MS flat at the joints by twice of its width and welding of over lapping and cross joints including supply of electrodes, red oxide/bitumen compound , paint etcand Laying of GI earth strip for equipment earthing, along the wall, trench, cable trays etc including fabrication of supports/cleats and fixing with wall bolts, welding works, painting of earth strip and riser with red oxide paint/bitumin compound and final. **For 50X6 sqmm**	M	630				
30	Installation of RCC Cable Cover	EA	3352				
31	Installation of Warning Tape as per the Specification of BRPL	M	3390				
32	Installation of single 66KV STRAIGHT THROUGH JOINTING KITS 3X300 SQMM XLPE with OFC kit	NOS	34				
33	Installation of single 66KV END TERMINATION KITS - OUTDOOR 3X300 SQMM XLPE, with OFC kit	NOS	12				
34	Installation, testing and commissioning of RFID active Electronic ball markers (for 33kV and 66kV joint)	EA	34				
35	Installation, testing and commissioning of RFID passive Electronic ball markers (for 33kV and 66kV joint)	EA	146				

36	laying of optical fibre cable	M	1000				
37	Laying of 40mm dia HDPE Duct in open trench	M	960				
38	Splicing of 48F Optic Fiber Cable	EA	4				
39	Installation of LIU (OFC) with wall	EA	4				
40	Splicing Termination 48F Optical Fiber Cable at LIU	EA	4				
41	installation of LDR	EA	2				
42	Dismantling of MS as well as galvanised structure for different equipment like isolator, C.T.'s, P.T.'s, CVT, LA's , ISO etc, cable supporting structure, 33kV/66 kV GI gantry and tower structure including consumables , welding electrode & hacksaw blades etc.	MT	21.5				
43	Dismantling of ACSR GOAT Conductor, Earth wire, Insulator & Hardware Fittings i.e. Single Tension String Insulator fittings with single tension clamp for single GOAT conductor ,Single Tension String Insulator fittings with double tension clamp for twin GOAT conductor, Double Tension String Insulator fittings with single tension clamp for	KM	4.2				
44	VLF High Voltage test as per IEEE 400.2	LS	1				
45	VLF Tan Delta as per IEEE 400.2	LS	1				
46	VLF Partial Discharge as per IEEE 400.2	LS	1				
47	Sheath integrity test	LS	1				

Kindly refer detailed package wise SCOPE attached as Volume III for Indicative Description of Goods/BOM, BOQ

BSES

PRICE BID (SUPPLY & SERVICES)

Package No B2 –

33 kV Cables Infeeds

BSES

BSES RAJDHANI POWER LIMITED

Package B2

Scheme -7A. Conversion of 33 kV D/C O/H Peeragarhi -Mukharjee ckt 1 & 2 Tower line by laying of 3Cx400 sq.mm. XLPE Cables (4 nos cable) from Tower no 1 in front of GGSH to Mukharjee Park Grid

Supply

S. No	Item Description	UOM	Qty	Basic (Rs)	Freight (Rs)	GST (Rs)	Unit Landed (Rs)	Total Landed Cost (Rs)
1	CBL,PWR,OFC EMDED;400MM2;3C;33KV;AL;XLPE	M	11200					
2	KIT,JOINTG,STGT THRO ;33KV;3CX400MM2;OFC	EA	42					
3	KIT,TERM,HS OUTDR;33KV;3CX400MM2;OFC	EA	4					
4	ANGLE,STRCTL,65MM;65MM;6MM;MS	MT	1					
5	CHNL,STRCTL,ISMC100;100MM;50mm;7.7mm	MT	1					
6	FLAT,STRCTL,6MM;50MM;5500MM;MS	MT	0.5					
7	Supply of Cable identification Tags	EA	90					
8	Supply of RCC Slab (550X675) as per the specification of BRPL/BYPL	EA	5500					
9	Supply of Warning Tape	M	3300					
10	Supply of PI,SPL PUR,180 MM;HDPE;PE80PN6;ROLLING	M	6920					
11	Supply of RFID Electronic Passive Ball Marker 3M Make	EA	56					
12	Supply of RFID Electronic Active Ball Marker 3M Make	EA	42					
13	Supply of RCC Coffin for joint as per the specification of BRPL/BYPL	EA	42					
14	Supply Cable Route Marker as per the specification of BRPL/BYPL	EA	56					
15	Supply Cable Joint Marker as per the specification of BRPL/BYPL	EA	11					
16	Supply of Number plate	EA	4					
17	Supply of Danger Plate	EA	4					
18	Supply of Phase Plate in Set of red Blue & Yellow	EA	4					
19	Supply of HDPE Duct-40mm	M	400					
20	Supply of Optical Fiber Cable	M	400					
21	Supply of RCC chamber for OFC S/Through	NOS	12					
22	Supply of Joint enclosure 48F Optic Fiber	EA	4					
23	Supply of LIU	EA	4					
24	Patch cord 25 mtr	EA	4					
25	180 mm HDPE SOCKET	EA	250					
26	Supply of Galvanized Nut & Bolts	KG	40					

ETC

S.No	Item Description	UOM	Qty	Basic (Rs)	GST (Rs)	Unit Landed (Rs)	Total Landed Cost (Rs)

1	Digging of cable trench as per specification and drawings. Rate is inclusive of digging and backfilling. Measurement shall be as per actual depth excavated . For Dense Carpeted bituminous Road.	CUM	1750				
2	Digging of joint pit suitable for 33/66 KV cable joint box and covering the joint box with sand and providing protection as per BYPL/BRPL design. **For Dense carpeted bituminous road.**	Cum	378				
3	Digging of test pits of requried size(not lessthan 1/2 Mtr. Wide at site for identification of cable route). Relevent volume shall be deducted from quantities of same item of cable digging **For Dense carpeted bituminous road**	EA	56				
4	Removal of Malba including Loading / Unloading on own vehicle. The payment shall be restricted to the quantity of sand laid.	CUM	459.776				
5	Laying of underground cable in trench ,covering with RCC cable cover, covering with sand ,Sand cushion will be min 75mm below and 75mm above the cable, fixing of cable identification tags (9" X 4") at every 30 Mtrs, Laying of warning tape above 250mm of the docket, refilling the trench and ramming the surface & removal of malba if any, including watch and ward till charging of cable (This activity includes only labour jobs) **for 33 KV cable Running Mtr**	M	11200				
6	Fixing of Cable identification Tags	EA	90				
7	Supply of Sand for cable route as per BRPL/BYPL specification	CUM	235.2				
8	Installation of RCC Cable Cover	EA	5500				
9	Installation of Warning Tape as per the Specification of BRPL/BYPL	M	3300				
10	Laying of HDPE pipe of 180mm dia.of PN6 Class PE80 For crossing of roads by trenchless technology including required equipment, manpower & transport of equipment from one place to another.	M	4600				
11	Crossing of roads by trench-less technology by laying of HDPE pipe excluding supply of pipe .Laying by Pneumatic Jack Hammer Road Cutting. laying. 180 **mm dia.**	M	2120				
12	Making of Kit STRT JNT 33kv 3Cx400MM2 HS with OFC	EA	42				
13	Making of Kit CBL TERN OUT 33kv 3Cx400MM2 with OFC	EA	4				
14	Installation, testing and commissioning of RFID active Electronic ball markers (for 33kV and 66kV joint)	EA	42				
15	Installation, testing and commissioning of RFID passive Electronic ball markers (for 33kV and 66kV joint)	EA	56				
16	Laying of 8" O.D. GI/HDPE pipe for crossing small Nallas in the cable route.	M	400				
17	Installation of RCC Coffin for joint as per the specification of BRPL/BYPL	EA	42				

18	Installation of Cable Route Marker as per the specification of BRPL/BYPL	EA	56				
19	Installation of Cable Joint Marker as per the specification of BRPL/BYPL	EA	11				
20	Charges for providing continuous steel barricade including cost of all material plant consumables transport and labour for shifting placing painting and regular maintenance. As per new specification.	M	2800				
21	Survey and submission of Ground penetration report for entire Route (before and after of cable laying)	M	2800				
22	Charges for carrying out Route survey and identification of underground utilities of various civic agencies before/ during execution of scheme involving cable laying work. Route length will be considered for payment. Route length will be specifically verified by DGM.	M	11200				
23	Providing and laying in position specified grade of reinforced cement concrete excluding the cost of shuttering, centring, finishing and reinforcement-All work up to plinth level : 1:2:4 (1cement :2 coarse sand :4 graded stone agg.20mm nominal size.)	CUM	15				
24	Fabrication of MS structure as well as galvanised for different equipment like isolator, C.T.'s, P.T.'s, CVT, LA's etc, cable supporting structure including supply of nuts and bolts, consumables , welding electrode, hacksaw blades etc. excluding supply of steel.	MT	3				
25	Erection of MS as well as galvanised structure for different equipment like isolator, C.T.'s, P.T.'s, CVT, LA's , ISO etc, cable supporting structure, 33kV/66 kV GI gantry structure , Tower Structure i/c consumables , welding electrode ,tack welding & hacksaw blades etc.	MT	3				
26	Painting of any M.S. Structure with one coat of Red oxide and two coats of AL. paint ISI marked including supply of paint by contractor.	KG	3				
27	Digging of earth pit up to depth of 10 ft. in rocky/ semi rocky as per feasibility at site of embedding 600 x600mm earth plate with M.S Flate 50 x8 mm running the same through 3/4 " dia G.I. grouting pipe. Earth Plate to be covered by charcoal 200kg. And 100 Kg. Sodium chloride in the earth pit and refilling etc. NOTE: Charcoal, common salt, earth plate, G.I. Pipe, MS flat, Badarpur, Cement and bricks to be supplied by the contractor	EA	20				
28	Making of civil goomitties around GI earth pipe as per standard design of BSES. Supply of necessary bricks, cement, badarpur, sand, C1 cover of size 1'x1' and providing the same at the top of goomitties.	EA	20				

29	Grouting of cable mounting structure with cement concrete having ratio 1:3:6 including fixing with gantry structure. Badarpur, cement and stone ballast shall be supplied by contractor. Suitable for mounting 33/66 KV cable.	EA	4					
30	Laying of MS flat in the excavated trench including risers, equipment earthing, overlapping of MS flat at the joints by twice of its width and welding of over lapping and cross joints including supply of electrodes, red oxide/bitumen compound , paint etcand Laying of GI earth strip for equipment earthing, along the wall, trench, cable trays etc including fabrication of supports/cleats and fixing with wall bolts, welding works, painting of earth strip and riser with red oxide paint/bitumen compound and final. **For 50X6 sqmm**	M	416					
31	Erection of Number plate	EA	4					
32	Erection of Danger Plate	EA	4					
33	Erection of Phase Plate in Set of red Blue & Yellow	EA	4					
34	Lay 40mm dia Duct Trenchless Mach.	M	400					
35	Laying of Optical Fiber Cable	M	400					
36	Erection of RCC chamber for OFC S/Through	NOS	12					
37	Splicing of 48F Optic Fiber Cable	EA	4					
38	Installation of LIU(OFC) with wall	EA	4					
39	Splicing Termination 48F Optical Fiber C	EA	4					
40	Patch cord 25 mtr	EA	4					
41	180 mm HDPE SOCKET	EA	250					
42	VLF High Voltage test as per IEEE 400.2	LS	1					
43	VLF Tan Delta as per IEEE 400.2	LS	1					
44	VLF Partial Discharge as per IEEE 400.2	LS	1					
45	Sheath integrity test	LS	1					

Scheme -7B. Conversion of 33 kV O/H Paschim Vihar -Mukharjee ckt 3 (T-OFF Chaukhandi) by laying of 3Cx400 sq.mm. XLPE Cables (2 nos cable) from Paschim vihar grid to keshopur metro station (Keshopur nalla) & Keshopur sabji mandi to Mukharjee park grid

Supply

S. No	Item Description	UOM	Qty	Basic (Rs)	Freight (Rs)	GST (Rs)	Unit Landed (Rs)	Total Landed Cost (Rs)
1	CBL,PWR,OFC EMDED;400MM2;3C;33KV;AL;XLPE	M	10000					
2	KIT,JOINTG,STGT THRO ;33KV;3CX400MM2;OFC	EA	38					
3	KIT,TERM,HS OUTDR;33KV;3CX400MM2;OFC	EA	6					
4	ANGLE,STRCTL,65MM;65MM;6MM;MS	MT	1					

5	CHNL,STRCTL,ISMC100;100MM;50mm;7.7mm	MT	1					
6	FLAT,STRCTL,6MM;50MM;5500MM;MS	MT	0.5					
7	Supply of Cable identification Tags	EA	80					
8	Supply of RCC Slab (550X675) as per the specification of BRPL/BYPL	EA	4835					
9	Supply of Warning Tape	M	2900					
10	Supply of PI,SPL PUR,180 MM;HDPE;PE80PN6;ROLLING	M	6200					
11	Supply of RFID Electronic Passive Ball Marker 3M Make	EA	100					
12	Supply of RFID Electronic Active Ball Marker 3M Make	EA	38					
13	Supply of RCC Coffin for joint as per the specification of BRPL/BYPL	EA	38					
14	Supply Cable Route Marker as per the specification of BRPL/BYPL	EA	100					
15	Supply Cable Joint Marker as per the specification of BRPL/BYPL	EA	19					
16	supply of Number plate	EA	4					
17	supply of Danger Plate	EA	4					
18	supply of Phase Plate in Set of red Blue & Yellow	EA	4					
19	Supply of HDPE Duct-40mm, PN6, PE80	M	400					
20	Supply of Optical Fiber Cable	M	400					
21	Supply of RCC chamber for OFC S/Through	NOS	12					
22	Supply of Joint enclosure 48F Optic Fiber	EA	4					
23	Supply of LIU	EA	4					
24	Patch cord 25 mtr	EA	4					
25	180 mm HDPE SOCKET	EA	250					
26	Supply of Galvanized Nut & Bolts	KG	40					

ETC

S.No	Item Description	UOM	Qty	Basic (Rs)	GST (Rs)	Unit Landed (Rs)	Total Landed Cost (Rs)
1	Digging of cable trench as per specification and drawings. Rate is inclusive of digging and backfilling. Measurement shall be as per actual depth excavated. For Dense Carpeted bituminous Road.	CUM	1500				
2	Digging of joint pit suitable for 33/66 KV cable joint box and covering the joint box with sand and providing protection as per BYPL/BRPL design. **For Dense carpeted bituminous road.**	Cum	342				
3	Digging of test pits of required size(not less than 1/2 Mtr. Wide at site for identification of cable route). Relevent volume shall be deducted from quantities of same item of cable digging **For Dense carpeted bituminous road**	EA	100				
4	Removal of Malba including Loading / Unloading on own vehicle. The payment shall be restricted to the quantity of sand laid.	CUM	613.6				

5	Laying of underground cable in trench ,covering with RCC cable cover, covering with sand ,Sand cushion will be min 75mm below and 75mm above the cable, fixing of cable identification tags (9" X 4") at every 30 Mtrs, Laying of warning tape above 250mm of the docket, refilling the trench and ramming the surface & removal of malba if any, including watch and ward till charging of cable (This activity includes only labour jobs) **for 33 KV cable Running Mtr**	M	10000				
6	Fixing of Cable identification Tags	EA	80				
7	Supply of Sand for cable route as per BRPL/BYPL specification	CUM	420				
8	Installation of RCC Cable Cover	EA	4835				
9	Installation of Warning Tape as per the Specification of BRPL/BYPL	M	2900				
10	Laying of HDPE pipe of 180mm dia.of PN6 Class PE80 For crossing of roads by trenchless technology including required equipment, manpower & transport of equipment from one place to another.	M	4200				
11	Crossing of roads by trench-less technology by laying of HDPE pipe excluding supply of pipe .Laying by Pneumatic Jack Hammer Road Cutting. laying . 180 **mm dia.**	M	1800				
12	Making of Kit STRT JNT 33kv 3Cx400MM2 HS, with OFC	EA	38				
13	Making of Kit CBL TERN OUT 33kv 3Cx400MM2, with OFC	EA	6				
14	Installation, testing and commissioning of RFID active Electronic ball markers (for 33kV and 66kV joint)	EA	38				
15	Installation, testing and commissioning of RFID passive Electronic ball markers (for 33kV and 66kV joint)	EA	100				
16	Laying of 8" O.D. GI/HDPE pipe for crossing small Nallas in the cable route.	M	400				
17	Installation of RCC Coffin for joint as per the specification of BRPL/BYPL	EA	38				
18	Installation of Cable Route Marker as per the specification of BRPL/BYPL	EA	100				
19	Installation of Cable Joint Marker as per the specification of BRPL/BYPL	EA	19				
20	Charges for providing continuous steel barricade including cost of all material plant consumables transport and labour for shifting placing painting and regular maintenance. As per new specification.	M	2900				
21	Survey and submission of Ground penetration report for entire Route (before and after cable laying)	M	5000				
22	Charges for carrying out Route survey and identification of underground utilities of various civic agencies before/ during execution of scheme involving cable laying work. Route length will be considered for payment. Route length will be specifically verified by DGM.	M	5000				

23	Providing and laying in position specified grade of reinforced cement concrete excluding the cost of shuttering, centring, finishing and reinforcement-All work up to plinth level : 1:2:4 (1cement :2 coarse sand :4 graded stone agg.20mm nominal size.)	CUM	15				
24	Fabrication of MS structure as well as galvanised for different equipment like isolator, C.T.'s, P.T.'s, CVT, LA's etc, cable supporting structure including supply of nuts and bolts, consumables , welding electrode, hacksaw blades etc. excluding supply of steel.	MT	3				
25	Erection of MS as well as galvanised structure for different equipment like isolator, C.T.'s, P.T.'s, CVT, LA's , ISO etc, cable supporting structure, 33kV/66 kV GI gantry structure , Tower Structure i/c consumables , welding electrode ,tack welding & hacksaw blades etc.	MT	3				
26	Painting of any M.S.Structure with one coat of Red oxide and two coats of AL.paint ISI marked including supply of paint by contractor.	KG	3				
27	Digging of earth pit upto depth of 10 ft. in rocky/ semi rocky as per feasibility at site of embedding 600 x600mm earth plate with M.S Flate 50 x8 mm running the same through 3/4 " dia G.I. grouting pipe. Earth Plate to be covered by charcoal 200kg. And 100 Kg. Sodium chloride in the earth pit and refilling etc. NOTE: Charcoal, common salt, earth plate, G.I. Pipe, MS flat, Badarpur, Cement and bricks to be supplied by the contractor	EA	20				
28	Making of civil goomitties around GI earth pipe as per standard design of BSES. Supply of necessary bricks, cement, badarpur, sand, C1 cover of size 1'x1' and providing the same at the top of goomitties.	EA	20				
29	Grouting of cable mounting structure with cement concrete having ratio 1:3:6 including fixing with gantry structure. Badarpur, cement and stone ballast shall be supplied by contractor. Suitable for mounting 33/66 KV cable.	EA	4				
30	Laying of MS flat in the excavated trench including risers, equipment earthing, overlapping of MS flat at the joints by twice of its width and welding of over lapping and cross joints including supply of electrodes, red oxide/bitumen compound , paint etcand Laying of GI earth strip for equipment earthing, along the wall, trench, cable trays etc including fabrication of supports/cleats and fixing with wall bolts, welding works, painting of earth strip and riser with red oxide paint/bitumen compound and final. **For 50X6 sqmm**	M	416				
31	Erection of Number plate	EA	4				
32	Erection of Danger Plate	EA	4				
33	Erection of Phase Plate in Set of red Blue & Yellow	EA	4				
34	Lay 40mm dia Duct Trenchless Mach.	M	400				
35	Laying of Optical Fiber Cable	M	400				

36	Installation of of RCC chamber for OFC S/Through	NOS	12				
37	Splicing of 48F Optic Fiber Cable	EA	4				
38	Installation of LIU(OFC) with wall	EA	4				
39	Splicing Termination 48F Optical Fiber C	EA	4				
40	Patch cord 25 mtr	EA	4				
41	180 mm HDPE SOCKET	EA	250				
42	VLF High Voltage test as per IEEE 400.2	LS	1				
43	VLF Tan Delta as per IEEE 400.2	LS	1				
44	VLF Partial Discharge as per IEEE 400.2	LS	1				
45	Sheath integrity test	LS	1				

Scheme -8. Conversion of 33kV O/H feeder into U/G by laying of double 33kV 3x400 sq.mm. XLPE U/G cable From Malviya Nagar to Shivalik grid

Supply

S. No	Item Description	UOM	Qty	Basic (Rs)	Freight (Rs)	GST (Rs)	Unit Landed (Rs)	Total Landed Cost (Rs)
1	CBL,PWR,OFC EMDED;400MM2;3C;33KV;AL;XLPE	M	8190					
2	KIT,JOINTG,STGT THRO ;33KV;3CX400MM2;OFC	EA	36					
3	KIT,JOINTING,TERM;33KV;3X400MM2;HS; OD;RY with OFC Kit	NOS	2					
4	RLY,NUMERICAL,50VDC,DISTANCE,MICOM P543, LDR	NOS	2					
5	Supply of Cable identification Tags	EA	419					
6	Supply of RCC Slab (550X675) as per the specification of BRPL/BYPL	EA	4658					
7	Supply of Warning Tape	M	2795					
8	Supply of HDPE pipes as per IS ,PN 6 class PE 80 - 180mm dia	M	4400					
9	Supply of RFID Electronic Passive Ball Marker 3M Make	EA	78					
10	Supply of RFID Electronic Active Ball Marker 3M Make	EA	36					
11	Supply of RCC Coffin for joint as per the specification of BRPL/BYPL (Each coffin legth shall cover etaire joint)	EA	36					
12	Supply Cable Route Marker as per the specification of BRPL/BYPL	EA	78					
13	Supply Cable Joint Marker as per the specification of BRPL/BYPL	EA	18					
14	Supply of HDPE Duct-40mm	M	3200					
15	Supply of Optical Fiber Cable	M	3200					
16	Supply of RCC Chamber for OFC joints	EA	8					
17	Supply of Joint enclosure 48F Optic Fiber Cable	EA	8					
18	Supply of LIU	EA	4					
19	Protection Material , Refer Annexure-C	LS	1					

20	SCADA Material , Refer Annexure-A	LS	1					

ETC

S.No	Item Description	UOM	Qty	Basic (Rs)	GST (Rs)	Unit Landed (Rs)	Total Landed Cost (Rs)
1	Digging of cable trench as per specification and drawings. Rate is inclusive of digging and backfilling. Measurement shall be as per actual depth excavated. **For Dense Carpeted bituminous Road.**	CUM	768				
2	Digging of joint pit suitable for 33/66 KV cable joint box and covering the joint box with sand and providing protection as per BYPL/BRPL design. **For Dense carpeted bituminous road.**	Cum	144				
3	Digging of test pits of required size(not less than 1/2 Mtr. Wide at site for identification of cable route). Relevent volume shall be deducted from quantities of same item of cable digging **For Dense carpeted bituminous road / CC Road**	EA	25				
4	Digging of cable trench as per specification and drawings. Rate is inclusive of digging and backfilling. Measurement shall be as per actual depth excavated. For Rocky Soil	CUM	1243				
5	Digging of joint pit suitable for 33/66 KV cable joint box and covering the joint box with sand and providing protection as per BYPL/BRPL design. **For Hard Rocky Soil**	Cum	180				
6	Digging of test pits of required size(not less than 1/2 Mtr. Wide at site for identification of cable route). Relevent volume shall be deducted from quantities of same item of cable digging **For Hard Rocky Soil**	EA	53				
7	Removal of Malba including Loading / Unloading on own vehicle. The payment shall be restricted to the quantity of sand laid.	CUM	644.92				
8	Laying of underground cable in trench ,covering with RCC cable cover, covering with sand ,Sand cushion will be min 75mm below and 75mm above the cable, fixing of cable identification tags (9" X 4") at every 30 Mtrs, Laying of warning tape above 250mm of the docket, refilling the trench and ramming the surface & removal of malba if any, including watch and ward till charging of cable (This activity includes only labour jobs) **for 33 KV cable Running Mtr**	M	8190				
9	Fixing of Cable identification Tags	EA	419				
10	Supply of Sand for cable route as per BRPL/BYPL specification	CUM	586.6				
11	Installation of RCC Cable Cover	EA	4658				
12	Installation of Warning Tape as per the Specification of BRPL/BYPL	M	2795				

BSES

13	Laying of HDPE pipe of 180mm dia.of PN6 Class PE80 For crossing of roads by trenchless technology including required equipment, manpower & transport of equipment from one place to another.	M	2600				
14	Crossing of roads by trench-less technology by laying of HDPE pipe excluding supply of pipe .Laying by Pneumatic Jack Hammer Road Cutting. laying . 180**mm dia.**	M	1400				
15	Installation, testing and commissioning of RFID active Electronic ball markers (for 33kV and 66kV joint)	EA	36				
16	Installation, testing and commissioning of RFID passive Electronic ball markers (for 33kV and 66kV joint)	EA	78				
17	Laying of 8" O.D. GI/HDPE pipe for crossing small Nallas in the cable route.	M	400				
18	Charges of making 33kv, 3x400SQ MM Straight through joints	EA	36				
19	Charges of making 33kv, 3x400SQ MM END Termination kits	EA	2				
20	Installation of RCC Coffin for joint as per the specification of BRPL/BYPL	EA	36				
21	Installation of Cable Route Marker as per the specification of BRPL/BYPL	EA	78				
22	Installation of Cable Joint Marker as per the specification of BRPL/BYPL	EA	18				
23	Charges for providing continuous steel barricade including cost of all material plant consumables transport and labour for shifting placing painting and regular maintenance. As per new specification.	M	2795				
24	Survey and submission of Ground penetration report for entire Route. (before of cable laying and after cable laying)	M	3900				
25	Charges for carrying out Route survey and identification of underground utilities of various civic agencies before/ during execution of scheme involving cable laying work. Route length will be considered for payment. Route length will be specifically verified by DGM.	M	8190				

BSES

26	Dismantling of **ACSR GOAT Conductor**, Earth wire, Insulator & Hardware Fittings i.e. Single Tension String Insulator fittings with single tension clamp for single GOAT conductor ,Single Tension String Insulator fittings with double tension clamp for twin GOAT conductor, Double Tension String Insulator fittings with single tension clamp for single GOAT conductor, Single Suspension String Insulator fittings with single drop/tension clamp for single GOAT conductor, Single Suspension String Insulator fittings with double drop/tension clamp for twin GOAT conductor, Single Suspension String Insulator fittings with single suspension clamp for single GOAT conductor, Single Suspension String Insulator fittings with double suspension clamp for twin GOAT conductor ,Bolted type 'T' Connector suitable for single GOAT conductor, Vibration Damper for GOAT Conductor, Repair Sleeve for GOAT, Mid span compression joint for ACSR GOAT, Rigid Type Spacers for twin GOAT PER CIRCUIT INCLUDING EARTH WIRE(PER CIRCUIT MEANS 3 CONDUCTORS AND ONE EARTH WIRE INCLUDING HARDWARE FITTINGS AND ACCESSORIES)	KM	3.62				
27	Dismantling of **MS as well as galvanised structure** for different equipment like isolator, C.T.'s, P.T.'s, CVT, LA's , ISO etc, cable supporting structure, 33kV/66 kV GI gantry and tower structure including consumables , welding electrode & hacksaw blades etc.	MT	18				
28	Laying of 40mm dia HDPE Duct in open trench	M	550				
29	Laying of Optical Fiber cable	M	3200				
30	Laying of 40mm dia, HDPE Duct through trenchless method using HDD machine	M	2650				
31	Installation of RCC Chamber for OFC joints	EA	8				
32	Splicing of 48F Optic Fiber Cable	EA	8				
33	Installation of LIU (OFC) with wall	EA	4				
34	Splicing Termination 48F Optical Fiber Cable at LIU	EA	4				
35	Testing and Commissioning of LDR	EA	2				
36	VLF High Voltage test as per IEEE 400.2	LS	1				
37	VLF Tan Delta as per IEEE 400.2	LS	1				
38	VLF Partial Discharge as per IEEE 400.2	LS	1				
39	Sheath integrity test	LS	1				
40	Protection Service Part, Annexure-D	LS	1				
41	SCADA Service Part, Refer Annexure-B	LS	1				

SCADA Adaptation at Malviya Nagar

Annexure- A: Supply

S.No.	Item description	UOM	Qty	Preferred Make
1	SW,ENET,16TX (FE) 4FX;20PORT;48VDC,dual redundant power supply	nos	1	Ruggedcom, Hirschmann, MOXA , Phoenix
2	cable tray CBL,300MM;75MM;2.5MM;GI	M	30	
3	Armoured CAT 6 Cable	M	200	D Link/ AMP /reputed make

4	Gland ,CBL,1/2 inch,SGL CU CMPRSN Brass and Stainless Steel & Suitable for Industrial Grade	nos	10	Comex or other reputed make
5	Ethernet Switch Panel, Wall mounted,600(H)x570(W)x400(D)mm,2mm thickness, CRCA sheet	NOS	1	reputed make/ subject to drawing approval
6	MTR, MFM, Digital,220VDC ,0.2 class	NOS	1	rishabh/Schneider

Annexure- B: Service

S No	Descriptions	UOM	Qty
1	Laying of DI, DO , CAT 6 etc	M	200
2	Installation of Ethernet Switch on wall	nos	1
3	Glanding of DI, DO , CAT 6 Cable	NOS	6
4	Fixing of Cable tray	M	30

RENOVATION OF 33 KV CRP AT 66 KV Malviya Nagar (OH Shivalik)

Annexure-C: Supply

S.No.	DESCRIPTION	Unit	Qty	Make/Model
1	P143 RELAY FOR 33& 11KV switchgear220 V DC	NOS	1	GE
2	Master Trip Relay220-250V dc with 6NO+2NC, Electrical Reset, Hand reset flag type; 1/4" Flush mounting type.	NOS	2	ABB/GE
3	DC Supvn Relay	NOS	1	ABB/GE
4	MFM	NOS	1	
5	Trip Ckt Supvn Relay	NOS	2	ABB/GE
6	AC supervision relay	NOS	1	ABB/GE
7	70%- 120% of 50V VDC , Atleast 3NO+1NC medium duty contacts min 5A continuous , for contact multiplication of various Signals	NOS	10	Schneider
8	LED-RED (220Vdc)Indication lamp Colour- RED, 1.5W,Dia - 22.5 sq mm, suitable for 250V dc	NOS	5	
9	LED-GREEN (220Vdc)Indication lamp Colour-Green, 1.5W,Dia - 22.5 sq mm, suitable for 250V dc	NOS	5	
10	LED-WHITE (220Vdc)Indication lamp Colour-White, 1.5W, Dia - 22.5 sq mm, suitable for 250V dc	NOS	2	
11	LED-AMBER (220Vdc)Indication lamp Colour- Amber, 1.5W,Dia - 22.5 sq mm, suitable for 250V dc	NOS	1	
12	LED-AMBER (240Vac)Indication lamp Colour- Amber, 1.5W, Dia - 22.5 sq mm, suitable for 250V ac	NOS	1	
13	LED-BLUE (220Vdc)Indication lamp Colour- Blue, 1.5W,Dia - 22.5 sq mm, suitable for 250V dc	NOS	1	
14	LED-Red (63.5V AC)Indication lamp Colour- Blue, 1.5W, Dia - 22.5 sq mm, suitable for 63.5 ac	NOS	1	
15	LED-yellow (63.5V AC)Indication lamp Colour- Blue, 1.5W, Dia - 22.5 sq mm, suitable for 63.5 ac	NOS	1	
16	LED-Blue (63.5 V ac ac)Indication lamp Colour- Orange, 1.5W, Dia - 22.5 sq mm, suitable for 63.5 ac	NOS	1	
17	RedWIRE,ELEC,FLEX;1.1KV;CU;PVC;2.5MM2	MTR	100	Polycab
18	YellowWIRE,ELEC,FLEX;1.1KV;CU;PVC;2.5MM2	MTR	100	Polycab
19	BlueWIRE,ELEC,FLEX;1.1KV;CU;PVC;2.5MM2	MTR	100	Polycab
20	BlackWIRE,ELEC,FLEX;1.1KV;CU;PVC;2.5MM2	MTR	100	Polycab
21	GreyWIRE,ELEC,FLEX;1.1KV;CU;PVC;2.5MM2	MTR	1500	Polycab
22	PVC Channel	MTR	40	
23	TNC3 Position,4 Ways,Spring Return to Neutral, Pistol grip handle,Angular movement:45+45 deg, Size:75 X75 mm,Contacts:3C,3T.	NOS	1	
24	PUSH BUTTONFlush Shrouded, Contacts:2NO+1NC, YELLOW Knob,Diameter: 22.5mm	NOS	1	
25	TOGGLE SWITCH 250V 10A 2POLE	NOS	1	
26	DOOR INTERLOCK/Limit switch 250VAC 10A	NOS	1	
27	Disconnector typeCATDM4+	NOS	70	

BSES

28	Non-Disconnecting TypeCATM4+	NOS	200	
29	Foundation channel Base plate for Din rail	NOS	15	
30	Din rail (Top Hat type) 35x7.5 sqmm.Zinc/Silver plated, Cr passivated. Supply should include 2 No.s of suitable end clamps per DIN Rail.	NOS	14	
31	Din rail (G type) 32 mm.Zinc/Silver plated, Cr passivated. Supply should includes 2 No.s of suitable end clamps per DIN Rail.	NOS	14	
32	AC MCB, 2A, 4Pole , suitable for 110V ac, with a changeover type addon contact	NOS	1	L&T
33	DC MCB SUITABLE FOR 250V dc, 4A, DP	NOS	2	L&T
34	DC MCB SUITABLE FOR 250V DC, 16A, DP	NOS	2	L&T
35	DC MCB SUITABLE FOR 250V DC, 10A, DP	NOS	4	L&T
36	DC MCB SUITABLE FOR 250v DC, 6A, DP	NOS	3	L&T
37	AC MCB 6A, DP 250vAC	NOS	1	L&T
38	AC MCB SUITABLE FOR 440V AC,2A, DP, C Characteristics, 10kA	NOS	2	L&T
39	Space heater 80W, 240V ac	NOS	1	
40	Thermostat30 to 90 deg, Rating: 15A, 230V AC	NOS	1	
41	Universal Socket and Switch 5&15A box type	NOS	1	
42	Tubular Compact Fluorescent lamp with fitting, 11W, 230V AC	NOS	1	
43	Double compression Brass Glands of various sizes	NOS	15	
44	25*6 Cu Earthing Strip with holes suitable to Screw 4 sq mm flexible wire	KG	1	
45	L/R SW	NOS	1	
46	SEMAPHORE with LED display	NOS	4	
47	Front facia plate for CRP	NOS	1	
48	Gland plate for CRP	Sqm	1	

Annexure-D: Erection, testing and commissioning				
S.No.	**DESCRIPTION**	**Unit**	**Qty**	**Make/Model**
1	Erection testing & commissioning including engineer visit charges for a day	EA	1	NA

Scheme -9 Conversion overhead to U/G of 33kV Pankha Road to Mayapuri Circuit 1 & 2 by laying of 03 nos 33 kv 3x400mm2 XLPE cable

Supply

S. No	Item Description	UOM	Qty	Basic (Rs)	Freight (Rs)	GST (Rs)	Unit Landed (Rs)	Total Landed Cost (Rs)
1	CBL,PWR,OFC EMDED;400MM2;3C;33KV;AL;XLPE	M	15000					
2	KIT,JOINTG,STGT THRO ;33KV;3CX400MM2;OFC	EA	51					
3	KIT,TERM,HS OUTDR;33KV;3CX400MM2;OFC	EA	6					
4	ARRSTR,ELEC,OUTDR ;33KV;10KA	NOS	6					
5	ANGLE,STRCTL,65MM;65MM;6MM;MS	MT	0.5					
6	RLY,NUMERICAL,220VDC,DISTANCE,MICOMP543	NOS	2					
7	CHNL,STRCTL,ISMC100;100MM;50mm;7.7mm	MT	1					
8	STP,MTLC,EARTHING;50X6MM;GI	KG	500					
9	CNDCTR,ACSR ZEBRA UNINSUL	M	60					
10	CLMP,PARRL GROV,ACSR ZEBRA CNDCTR	NOS	24					

11	TAG,SFTY,RCTNGL;AL;MTLC	NOS	1020					
12	RCC Cable protection cover as per BYPL/BRPL specification & drawing. (50 Thick 550 mm wide)	M	3281					
13	warning tape per BSES Design specification (Width=150mm, Thickness=0.3u)	M	3500					
14	Cable Route/Joint Marker as per approved drawing. For 33/66 KV cables.	EA	183					
15	HDPE pipes,PN 6 class PE 80 - 180mm dia (tender 2019)	M	9900					
16	RFID Electronic Passive Ball Marker 3M Make	EA	100					
17	RFID Electronic Active Ball Marker 3M Make	EA	51					
18	RCC Coffin for joint as per the specification of BRPL	EA	51					
19	HDPE Duct-40mm	M	2000					
20	Optical Fiber Cable	M	2200					
21	Joint enclosure 48F Optic Fiber Cable	EA	6					
22	LIU	EA	2					
23	Danger plates.	EA	4					
24	Number plates	EA	4					
25	Phase plates.	EA	4					
26	Circuit plates .	EA	4					
27	Galvanized Nut & Bolts	KG	200					

ETC

S.No	Item Description	UOM	Qty	Basic (Rs)	GST (Rs)	Unit Landed (Rs)	Total Landed Cost (Rs)
1	Digging of cable trench as per specification and drawings. Rate is inclusive of digging and backfilling. Measurement shall be as per actual depth excavated. For Dense Carpeted bituminous Road.	CUM	4464				
2	Digging of joint pit suitable for 33/66 KV cable joint box and covering the joint box with sand and providing protection as per BYPL/BRPL design. For Dense carpeted bituminous road.	Cum	510				
3	Digging of test pits of required size(not less than 1/2 Mtr. Wide at site for identification of cable route). Relevent volume shall be deducted from quantities of same item of cable digging For Dense carpeted bituminous road / CC Road	EA	167				
4	Laying of underground cable in trench ,covering with RCC cable cover, covering with sand ,Sand cushion will be min 75mm below and 75mm above the cable, fixing of cable identification tags (9" X 4") at every 30 Mtrs, Laying of warning tape above 250mm of the docket, refilling the trench and ramming the surface & removal of malba if any, including watch and ward till charging of cable (This	M	15000				

	activity includes only labour jobs) for 33 KV cable Running Mtr						
5	Installation of TAG,SFTY,RCTNGL;AL;MTLC	NOS	1020				
6	Providing and Laying Sand cushioning for cable route as per BRPL specification and drawing.	CUM	595				
7	Installation of RCC Cable Cover	EA	3281				
8	Installation of Warning Tape as per the	M	3500				
9	Laying of HDPE pipe for crossing small Nallas in the cable route or in the existing trenches	M	4200				
10	Crossing of roads by trench-less technology by laying of HDPE pipe excluding supply of pipe .Laying by HDD Machine Moling. Drilling and laying. 200mm dia.	M	4500				
11	Crossing of roads by trench-less technology by laying of HDPE pipe excluding supply of pipe .Laying by Pneumatic Jack Hammer Road Cutting. laying . 200mm dia.	M	1200				
12	Detail survey i/c. preparation of site plan & profile.	KM	5				
13	Charges for providing continuous steel barricade 1.2 mtr high including cost of all material plant consumables transport and labour for shifting placing painting and regular maintenance.40% qty for selected portion	M	5000				
14	Charges for carrying out Route survey and identification of underground utilities of various civic agencies before/ during execution of scheme involving cable laying work. Route length will be considered for payment. Route length will be specifically verified by DGM.	M	5000				
15	Fixing of Cable Route/Joint Marker as per approved drawing. For 33/66 KV cables.	EA	183				
16	Removal of Malba including Loading / Unloading on own vehicle. The payment shall be restricted to the quantity of sand laid.	CUM	714				
17	Providing and laying in position specified grade of reinforced cement concrete excluding the cost of shuttering, centring, finishing and reinforcement-All work up to plinth level : 1:2:4 (1cement :2 coarse sand :4 graded stone agg.20mm nominal size.)	CUM	22				
18	Fixing of Danger plates.	EA	4				
19	Fixing of number plates .	EA	4				
20	Fixing of Phase plates .	EA	4				
21	Fixing of circuit plates .	EA	4				
22	laying of optical fibre cable	M	2200				
23	Laying of 40mm dia HDPE Duct in open trench	M	1400				
24	Laying of 40mm dia, HDPE Duct through trenchless method using HDD machine	M	600				
25	Making optical fibre end box(Splicing of 48F Optical Fiber Cable)	Nos	6				
26	Installation of LIU(48F) including Patch cord	EA	2				

27	Installation, testing and commissioning of RFID active Electronic ball markers (for 33kV and 66kV joint)	EA	51				
28	Installation, testing and commissioning of RFID passive Electronic ball markers (for 33kV and 66kV joint	EA	100				
29	33KV Joint.chrg St.Th.Joint 3C XLPE with OFC	EA	51				
30	Mkng O/D,I/D End Trmintn Kit 33KV 3CX400 with OFC	EA	6				
31	Survey and submission of Ground penetrat report (before and after of cable laying)	M	5000				
32	Fabrication of MS structure as well as galvanised for different equipment like isolator, C.T.'s, P.T.'s, CVT, LA's etc, cable supporting structure including supply of nuts and bolts, consumables , welding electrode, hacksaw blades etc. excluding supply of steel.	MT	2				
33	Erection of MS as well as galvanised structure for different equipment like isolator, C.T.'s, P.T.'s, CVT, LA's , ISO etc, cable supporting structure, 33kV/66 kV GI gantry structure , Tower Structure i/c consumables , welding electrode ,tack welding & hacksaw blades etc.	MT	2				
34	Painting of any M.S.Structure with one coat of Red oxide and two coats of AL. paint ISI marked including supply of paint by contractor.	KG	2000				
35	Erection of electrical equipment Including supply of T & P, all consumable items such as welding rods, hacksaw blades etc and minor modification in support structure for fixing as required.For 33 kV LA's with/without surge counter	EA	6				
36	Laying of MS flat in the excavated trench including risers, equipment earthing, overlapping of MS flat at the joints by twice of its width and welding of over lapping and cross joints including supply of electrodes, red oxide/bitumen compound , paint etcand Laying of GI earth strip for equipment earthing, along the wall, trench, cable trays etc including fabrication of supports/cleats and fixing with wall bolts, welding works, painting of earth strip and riser with red oxide paint/bitumen compound and final. For 50X6 sqmm	M	178				
37	Excavation of trench below the ultimate good earth level in following type of soil including refilling after laying of earth mat riser, fixing of earth electrodes welding etc. For Soft soil	CUM	78				
38	Digging of earth pit up to depth of 10 ft. in rocky/ semi rocky as per feasibility at site of embedding 600 x600mm earth plate with M.S Flate 50 x8 mm running the same through 3/4 " dia G.I. grouting pipe. Earth Plate to be covered by charcoal 200kg. And 100 Kg. Sodium chloride in the earth pit and refilling etc. NOTE: Charcoal, common salt, earth plate, G.I. Pipe, MS flat, Badarpur, Cement and bricks to be supplied by the contractor	EA	6				

39	Making of civil goomitties around GI earth pipe as per standard design of BSES. Supply of necessary bricks, cement, badarpur, sand, C1 cover of size 1'x1' and providing the same at the top of goomitties.	EA	6				
40	Grouting of cable mounting structure with cement concrete having ratio 1:3:6 including fixing with gantry structure. Badarpur, cement and stone ballast shall be supplied by contractor. Suitable for mounting 33/66 KV cable.	EA	2				
41	Mounting of 33KV,3x400sq.mm.XLPE cable with cable end box on the steel structure and fixing it with suitable wooden cleats (wooden cleats shall be supplied by contractor) i/c.its jumpering with the isolator as required.	EA	6				
42	Dismantling of poles of following sizes after digging the pit and taking out the pole and stacking the pole at a proper place in safe positions and refilling the pit with loose earth and ramming including removal of Malba..MS rails/Struts.	EA	32				
43	Dismantling of ACSR GOAT Conductor, Earth wire, Insulator & Hardware Fittings i.e. Single Tension String Insulator fittings with single tension clamp for single GOAT conductor ,Single Tension String Insulator fittings with double tension clamp for twin GOAT conductor, Double Tension String Insulator fittings with single tension clamp for single GOAT conductor, Single Suspension String Insulator fittings with single drop/tension clamp for single GOAT conductor, Single Suspension String Insulator fittings with double drop/tension clamp for twin GOAT conductor, Single Suspension String Insulator fittings with single suspension clamp for single GOAT conductor, Single Suspension String Insulator fittings with double suspension clamp for twin GOAT conductor ,Bolted type 'T' Connector suitable for single GOAT conductor, Vibration Damper for GOAT Conductor, Repair Sleeve for GOAT, Mid span compression joint for ACSR GOAT, Rigid Type Spacers for twin GOAT PER CIRCUIT INCLUDING EARTH WIRE (PER CIRCUIT MEANS 3 CONDUCTORS AND ONE EARTH WIRE INCLUDING HARDWARE FITTINGS AND ACCESSORIES)	KM	7.5				
44	Dismantling of MS as well as galvanised structure for different equipment like isolator, C.T.'s, P.T.'s, CVT, LA's , ISO etc, cable supporting structure, 33kV/66 kV GI gantry and tower structure including consumables , welding electrode & hacksaw blades etc.	MT	14				
45	Sringing and sagging of main bus and cover bus bar with ACSR Zebra conductor and Jumpering of various electrical equipment by ACSR Zebra conductor in between equipment to equipment of any length required and from bus bar to equipment of any length required	M	60				

	with the help of PG clamps, T connectors and other clamps. For 66 kV /33KV Yard						
46	Stringing of Rigid Spacer Clamp with tee – off suitable for single Zebra conductor and double zebra to single zebra convertor.	EA	24				
47	VLF High Voltage test as per IEEE 400.2	LS	1				
48	VLF Tan Delta as per IEEE 400.2	LS	1				
49	VLF Partial Discharge as per IEEE 400.2	LS	1				
50	Sheath integrity test	LS	1				

BSES

VOLUME – III

TECHNICAL SPECIFICATIONS

BSES

TECHNICAL SPECIFICATIONS OF MOLARBBANDH GRID

PACKAGE -A

SCHEME 1

(CIVIL & ELECTRICAL)

BSES Rajdhani Power Limited
BSES Bhawan, Nehru Place, New Delhi- 19

TECHNICAL SPECIFICATION

FOR

CIVIL WORKS

Prepared by	**Konchada Rao**			**Rev: 0**
Reviewed by	**Piyush Shrivastava**			**Date: 24th November, 2025**
Approved by	**Ajay Karan**			

1.0 GENERAL REQUIREMENT

1.1. This chapter includes the technical requirements for Establishment of **66/11 KV GIS Substation grid at Molarband, Sarita Vihar** including associated design and preparation of all civil & structural drawings and execution of all associated civil works. This chapter deals mainly with technical specifications for the design, supervision and construction of complete civil works including structural and finishing works.

1.2. The specifications are intended for general description of work, quality and workmanship. The specifications are not however exhaustive to cover minute details and the work shall be executed according to relevant latest Indian Standards/IRC specifications/CPWD specifications. In the absence of the above, the work shall be executed according to the best prevailing practices in the trade, recommendations of relevant American or British Standards or to the instructions of Engineer. The IS standards/IRC specifications/CPWD specifications to be followed are mentioned in the technical specifications attached hereto. They shall be latest edition/version of the same issued 15 days prior to the date of opening of this tender. The Contractor is expected to get himself clarified on any doubts about the specifications etc. before bidding and the discussions recorded in writing with the Owner in respect of interpretation of any portion of this document.

1.3. The work shall be carried out according to the design / drawings to be developed by the Contractor and approved by the Owner based on Tender Drawings supplied to the Contractor by the Owner. For all buildings, structures, foundations etc. necessary layout and details shall be developed by the Contractor keeping in view the functional requirement of the Sub-Station facilities and providing enough space and access for operation, use and maintenance based on the input provided by the Owner. Certain minimum requirements are indicated in this specification for guidance purposes only. However, the Contractor shall quote according to the complete requirements.

1.4. The Contractor shall take all necessary precautions to protect all the existing equipments, structures, facilities & buildings etc. from damage. In case any damage occurs due to the activities of the Contractor on account of negligence, ignorance, accidental or any other reason whatsoever, the damage shall be made good by the Contractor at his own cost to the satisfaction of the Engineer. The Contractor shall also take all necessary safety measures, at his own cost, to avoid any harm / injury to his workers and staff from the equipment & facilities of the power station.

1.5. During the progress of work, the Engineer will exercise supervision of the work to ensure that the technical provisions of the contract are being followed and the work is being executed accurately and properly. However, such supervision shall in no way relieve the Contractor of the responsibility for executing the work in accordance with the specifications.

1.6. Before submitting the bid, the Contractor shall inspect and examine the site and its surroundings and shall satisfy himself as to the nature of the ground and subsoil, the availability of materials necessary for completion of the work, means of access to site and in general shall himself obtain all necessary information as to risks, contingencies and other circumstances which may influence or affect his offer. No extra claim consequent on any misunderstanding or otherwise shall be allowed.

1.7. During execution, if any additional requirement arises for successful commissioning of grid ,then same shall be in scope of vendor by considering all safety and quality standards in all aspects

2.0 GEOTECHNICAL INVESTIGATION

The Owner will carry out Geo Technical Investigation and Topographical Survey for the entire Sub-

Station plot including switchyard. The copy of the report will be given as an input to bidder for Civil Design & estimation work. In case of any further detailed study is required, same shall be in scope of bidder.

3.0 SITE PREPARATION

3.1. Scope

3.1.1. This clause covers the design and execution of the work for site preparation, such as clearing of the site, the supply and compaction of fill material, excavation and compaction of backfill for foundation, road construction, drainage, trenches and final topping by stone (broken hard stone). This work shall also include disposal of any non-essential/excess soil or malba.

3.2. General

3.2.1. The layout and levels of all structures, etc shall be made by the Contractor at his own cost from the general grids of the plot and benchmarks finalized / approved by the Owner. (The required filling up to formation level shall be in the scope of Vendor). The Contractor shall give all help in instruments, materials and personnel to the Owner for checking the detailed layout and shall be solely responsible for the correctness of the layout and levels.

3.2.2. The Contractor shall have to make good to all the damages to the boundary wall and gates during work execution.

3.2.3. Contractor shall develop a building layout and other layouts so that the trees inside the plot shall be avoided from cutting. In extreme conditions, if the tree cutting is unavoidable, necessary liaison for permission shall be on part of Contractor from respective Govt. Agency. Requisite formalities shall be carried out by Owner. Fee shall be borne by the Owner. Compensatory plantation shall be done (if required) by vendor; BRPL shall provide space for the same.

3.2.4. The Contractor shall develop the site area to meet the requirements of the intended purpose. The site preparation shall confirm to the requirements of relevant sections of this specification or as per stipulations of standard specifications.

3.2.5. If fill material is required, the fill material shall be suitable for the above requirement. The fill shall be such a material and the site so designed as to prevent the erosion by wind and water of material from its final compacted position or the in-situ position of undisturbed soil.

3.2.6. Material unsuitable for filling works shall be removed and replaced by suitable fill material and to be approved by the Owner.

3.2.7. Backfill material around foundations or other works shall be suitable for the purpose for which it is used and shall be compacted to the density described under Compaction. Excavated material not suitable or not required for backfill shall be disposed off by the contractor in areas as directed by Owner upto a maximum lead of 5 km. Backfill material if found having mix of earth and fly ash should not be used for top 30 cm of formation level and should be supplemented with earth at the cost of contractor. The old / existing

foundations if not required shall be dismantled by the contractor.

3.3. Excavation and Backfill

3.3.1. Excavation and backfill for foundations shall be in accordance with the relevant code.

3.3.2. Whenever water level is met during the excavation, it shall be dewatered and water level shall be maintained below the bottom of the excavation level during excavation, concreting and backfilling. Nothing extra shall be payable by the owner on this account.

3.3.3. When embankments are to be constructed on slopes of 15% or greater, benches or steps with horizontal and vertical faces shall be cut in the original slope prior to placement of embankment material. Vertical face shall measure not more than 1 m in height.

3.3.4. Embankments adjacent to abutments, culverts, retaining walls and similar structures shall be constructed by compacting of the material in successive uniform horizontal layers not exceeding 15 cm in thickness (of loose material before compaction). Each layer shall be compacted as required by means of mechanical tampers approved by the Owner. Rocks larger than 10cm in any direction shall not be placed in embankment adjacent to structures.

3.3.5. Earth embankments of roadways and site areas adjacent to buildings shall be placed in successive uniform horizontal layers not exceeding 20 cm in thickness in loose stage measurement and compacted to the full width specified. The upper surface of the embankment shall be shaped so as to provide complete drainage of surface water at all times.

3.4. Compaction

3.4.1. The density to which fill materials shall be compacted shall be as per, relevant IS and as per direction of Owner. All compacted sand filling shall be confined as far as possible. Backfilled earth shall be compacted to minimum 95% of the Standard Proctor's density at OMC. The sub grade for the roads and embankment filling shall be compacted to minimum 95% of the Standard Proctor's density at OMC. Cohesion less material sub grade shall be compacted to 70% relative density (minimum).

3.4.2. At all times unfinished construction shall have adequate drainage. Upon completion of the roads surface course, adjacent shoulders shall be given a final shaping, true alignment and grade.

3.4.3. Each layer of earth embankment when compacted shall be as close to optimum moisture content as practicable. Embankment material which does not contain sufficient moisture to obtain proper compaction shall be wetted. If the material contains any excess moisture, then it shall be allowed to dry before rolling. The rolling shall begin at the edges overlapping half the width of the roller each time and progress to the center of the road or towards the building as applicable. Rolling will also be required on rock fills. No compaction shall be carried out in rainy weather.

3.5. Requirement for fill material under foundation

3.5.1. The thickness of fill material under the foundations shall be such that the maximum pressure from the footing, transferred through the fill material and distributed onto the original undisturbed soil will not exceed the allowable soil bearing pressure of the original undisturbed soil. For expansive soils the fill materials and other protections etc. to be used under the foundation has to be approved by the Owner.

4.0 CODES AND STANDARDS

All standards, specifications, acts and code of practice shall be followed. In case of conflict between this specification and those (IS standard/ IRC specification/CPWD Specification, etc.) referred to herein, the former shall prevail.

5.0 SUBMISSIONS

The following documents shall be submitted by the Contractor for approval of the BRPL prior to commencement of fabrication and erection / construction.
This list is not exhaustive but indicative only. Final list of drawings shall be prepared by successful bidder during detailed engineering. Bidder shall submit the qualification details of his licensed Architect & structural engineer (Approved by any Govt organization for detailed engineering/Structural design/approved by Institution of Engineers (India).

i. Design calculation, general arrangement drawings, foundation drawing & detailed erection / construction drawings including R/F drawings for Sub-Station Control Room Building.
ii. Foundation design and drawing of Cable Pot Head.
iii. Foundation design & drawing of all equipment foundations.
iv. Structural steel fabrication drawings for Cable Pot & equipment support structure.
v. Site preparation, filling up to formation level, removal of trees, if any and site cleanliness
vi. Foundation design & drawing of Power Transformer
vii. Design & drawing of transformer grating, firewall & burnt oil tank
viii. Foundation design & drawing for lighting pole.
ix. Foundation design & drawing of Capacitor bank (roof/yard as decided during engineering), Auxiliary Transformer and design of fencing for both.
x. Complete fencing along with gate for the Sub-Station yard
xi. Details of Indoor and Outdoor Cable Trenches with cable tray supports and trench covers
xii. Design & drawing of Rainwater Harvesting System, sewerage system including septic tank, water supply arrangement, landscaping, etc.
xiii. Design & drawing of roads and complete drainage system (with final connection to Rain Water Harvesting recharge pit) within Sub-Station including crossings.
xiv. Design & drawing Security room.
xv. Design & drawing NIFPS system & underground water tank.

6.0 SUB-STATION CONTROL ROOM BUILDINGS GENERAL REQUIREMENTS

6.1. General

6.1.1. The scope includes the design, engineering and construction including anti-termite treatment, plinth protection, DPC of buildings including sanitary, water supply, electrification, fire fighting system, etc. The building shall be of RCC framed structure of minimum concrete grade M25. The Sub-Station Building shall include rooms as specified below:

S. No.	Facility
i	Control & 11kV S/W Room
ii	GIS Hall
iii	Cellar floor
iv	Battery Room, Charger Room, Maintenance room and office rooms
v	Pantry
VI	Toilet (Male & Female separately)
VII	Staircase (for approach till topmost roof slab) including separate staircase for Fire-escape.
VIII	Steel staircase with all safety features for approach till mumty slab

6.1.2. Minimum floor area requirements have been given in tender drawings, which may be increased at the time of detailed engineering to suit project requirements.

6.1.3. An open space of 1200 mm minimum shall be provided on the periphery of the rows of panel and equipment generally in order to allow easy operator movement and access as well as maintenance.

6.1.4. The building shall be aesthetically designed keeping in view the surrounding landscape; proper architecture shall be used to design the exterior look and finish. The architectural drawing shall be submitted for Owner's approval.

6.1.5. Future extension of one floor shall be considered at the time of design. Any other possibility of annex building shall be taken care of while finalizing the layout of the control room building.

6.1.6. Control Room cum Administrative building shall be constructed as per the approved drawings by Owner. CPWD specification shall be followed in all the building works. The clear height of building shall be minimum 4.50 m (from Finish floor level to bottom of roof beam of First floor & Second Floor). The height of GIS hall shall be as per requirement of GIS equipment & EOT.

6.1.7. Cable cellar shall be provided in the building. The clear height of cable caller shall be minimum 3.00 m (from floor level to bottom of roof beam of Ground floor).

6.1.8. Plinth level of sub-station building shall be 750mm above the internal road. Internal road level shall be 750mm above the external main road.

6.2. Design

a) The Building shall be designed on Green Building Concept duly certified by (IGBC Green Service Building rating certification/Svagriha Certification). The design of control room building shall be such decided that's minimum one floor can be added in future.

Following parameters shall be followed: -

- To the requirements of the National Building Code of India and the standards quoted therein. The contractor shall also arrange approval of building from any local authorities such as MCD or fire officer if required so. The official fees shall be born by BRPL.
- For the specified climatic & loading conditions.
- The building shall have framed super structure.
- To adequately suit the requirements of the equipment and apparatus contained in the buildings and in all respects to be compatible with the intended use and occupancy.
- With a functional and economical space arrangement.
- To be aesthetically pleasing. Different structures shall show a uniformity and consistency in architectural design.
- To allow for easy access to equipment and maintenance of the equipment.
- With wherever required, fire retarding materials for walls, ceilings and doors which would prevent supporting or spreading of fire.
- With materials preventing dust accumulation.

b) Suitable expansion joints shall be provided in the longitudinal direction wherever necessary with provision of twin columns.

c) Individual members of the buildings frame shall be designed for the worst combination of forces such as bending moment, axial force, shear force, torsion etc.

d) Permissible stresses for different load combinations shall be taken as per relevant IS Codes.

e) The building lighting shall be designed in accordance with the requirements of relevant section.

f) The building auxiliary services like exhaust and ventilation systems, fire protection and detection systems and all other miscellaneous services shall be designed in accordance with the requirements specified in relevant section or elsewhere in the Specification for the project.

g) Two nos. of emergency exits shall be provided in the building.

6.3. Design Loads

Building structures shall be designed for the most critical combinations of dead loads, super- imposed loads, equipment loads, crane load, wind loads, seismic loads, and temperature loads Dead loads shall include the weight of structures complete with finishes, fixtures and partitions and should be taken as per IS:875. Super-imposed loads in different areas shall include live loads, minor equipment loads, cable trays, small pipe racks & hangers and erection, operation and maintenance loads. Equipment loads shall constitute, if applicable, all load of equipments to be supported on the building frame The wind loads shall be computed as per IS 875, Seismic Coefficient method shall be used for the seismic analysis as per IS 1893 with importance factor 1.5.

For crane loads an impact factor of 25% and lateral crane surge of 10% (of lifted weight + trolley weight) shall be considered in the analysis of frame according to provisions of IS : 875 (latest revision). The longitudinal crane surge shall be 5% of the static wheel load. For temperature loading, the total temperature variation shall be considered as 2/3 of the average maximum annual variation in temperature. The average maximum annual variation in temperature for the purpose shall be taken as the difference between the mean of the daily minimum temperature during the coldest month of the year and mean of daily maximum temperature during the hottest month of the year. The structure shall be designed to withstand stresses due to 50% of the total temperature variation. Wind and Seismic forces shall not be considered to act simultaneously.

Floors/slabs shall be designed to carry loads imposed by equipment. Floors shall be designed for live loads as per relevant IS codes. Cable and piping loads shall also be considered additionally for floors where these loads are expected.

In addition, beams shall be designed for any incidental point loads to be applied at any point along the beams, the floor loads shall be subject to Owner's approval.

For consideration of loads on structures IS: 875, the following minimum superimposed live loads shall however be considered for the design.

RCC-Floor	5 KN/M2	for offices,
GIS & all Equipments Room Floor	15 KN/M2 (min)	actual requirements if higher than 15KN/M2 based on equipment weight and Layout plan
Stairs & balconies	5 KN/M2	
Chequered plate floor	4 KN/M2	

Any additional load coming in the structure shall be calculated as per IS: 875.

6.4. Submission

The following information shall be submitted for review and approval to the Owner:

a) Design criteria shall comprise the codes and standards used. Applicable climatic data including wind loads, earthquake factors, maximum and minimum temperatures applicable to the building locations, assumptions of dead and live loads, including equipment loads, impact factors, safety factors and other relevant information.

b) Structural design calculations and drawing (including construction/fabrication) for all reinforced concrete and structural steel structures.

c) Fully, dimensioned concept plan including floor plans, cross sections, longitudinal sections, elevations and perspective view of each building. These drawings shall be drawn at a scale not

smaller than I : 50 and shall identify the major building components.

d) Fully dimensioned drawings showing details and sections drawn to scales of sufficient size to clearly show sizes and configuration of the building components and the relationship between them.

e) Product information of building components and materials, including walls partitions flooring ceiling, roofing, door and windows and building finishes.

f) A detailed schedule of building finishes including color schemes.

g) A door & window schedule showing door types and locations, door lock sets and latch sets and other door hardware.

h) Copy of all tests/ studies/ investigation carried out by bidder as per scope.

Approval of the above information shall be obtained before ordering materials or starting fabrication or construction as applicable.

6.5. Flooring

Flooring in various rooms of control room building shall be as per detailed schedules given in Table – 1 - Finishing Schedule.

1. False flooring: Providing and fixing Raised Access Flooring .The Access raised floor shall be heavy grade UNIFLOOR FS800H with point load of 3.6KN/over 25mm sq. and UDL of 15 KN /M2 panels manufactured from steel with lightweight cementitious core in the size 600x600x35mm.The bottom of the panel shall be embossed in hemispherical shape to give strength and flexural rigidity on the exposed surface for lifetime protection and shall be zinc whisker free. The panel has to be placed on the pedestal base plate 100x100x8mm x 25mm solid road 450mm/600MM height 75x75x4mm mm top plate made from all steel zinc plated construction. Pedestal assembly shall provide for easy adjustment of leveling and accurately align panels to ensure lateral restrain. Pedestal head shall be designed to avoid rattle or squeaks. The steel base plate of the pedestal shall be fixed on to the sub-floor with epoxy pedestal adhesive and /or mechanical fixing. An all-steel rectangular stringer system having pre punched holes at both ends to ensure correct alignment with pedestal heads be applied for maximum stability. The panel shall be finished with high abrasion anti-static HPL in size 600x600x0.9mm with beading on all sides to provide protection of edges as per Drawings and as per Manufacturers recommendations. Providing Heavy Duty Double Suction Panel Lifter is included in item. Grommets for Easy Cable Access shall be provided as per design wherever required.

600 mm Finished Floor Height (FFH)

6.6. Walls

Control room building shall be of framed superstructure. All walls shall be non-load bearing walls. Minimum thickness of walls shall be 340mm upto DPC level in cement mortar 1:4 (1 Cement: 4 Coarse sand) and 230mm above DPC level in cement mortar 1: 4 (1 Cement: 4 coarse sand). Parapet walls (Incl. s/stn building and mumty) shall be 230 mm thick and 1100mm high from top of roof treatment. 50 mm CC coping to be provided on parapet walls.

6.7. Plastering

All internal walls shall have minimum 12mm/ 15mm thick 1:4 (1 Cement : 4 coarse Sand) cement sand plaster. The ceiling shall have 6mm thick 1:3 cement sand plaster.

6.8. Finishing

All external surfaces (S/stn building, boundary wall and other structures) shall have Texture finish of Make UTTPL (Ultratech Texture Paints Pvt. LTD) as per below detail:

- Building area: GRANITE ATELOI SA – 36-50% LIGHT
- Beam/ column: GRANITE ATELIO SA – PINK

Granito Attiloe:
Application Process:
Thickness 1.5- 1.8mm
1. Applying Priming coat of acrylic Primer mixed with wall sealer & water in the ratio of (1:1).
2. Repair check of plaster surface with Exterior grade cement mixed with Primer. (Whereas cement is provided by client on FOC basis).
3. First coat to obtain highly dense smooth appearance of 0.5 to .7 mm thick by applying over the primer to be applied with spray / trowel depends upon the surface.
4. Second coat of 100% natural crushed granite material 0.8 to .9 mm thick by applying a spray gun with a pressure of 2bhp to achieve desired finish.
5. Two coat of water base Protective.

6.9. False Ceiling

a) Providing and fixing false ceiling at all height including providing and fixing of frame work made of special sections, power pressed from M.S. sheets and galvanized with zinc coating of 120 gms/sqm (both side inclusive) as per IS : 277 and consisting of angle cleats of size 50mm length x 50 mm wide x 3.0 mm thick with flanges of at 1200 mm centre to centre, one flange fixed to the steel truss members and other flange of cleat fixed to the angle hangers of 50x50x3 mm of required length with nuts & bolts of required size and other end of angle hanger fixed with intermediate G.I. channels 45x15x0.9 mm running at the spacing of 1200 mm centre to centre, to which the ceiling section 0.5 mm thick bottom wedge of 80 mm with tapered flanges of 26 mm each having lips of 10.5 mm, at 450 mm centre to centre, shall be fixed in a direction perpendicular to G.I. intermediate channel with connecting clips made out of 2.64 mm dia x 230 mm long G.I. wire at every junction, including fixing perimeter channels 0.5 mm thick 27 mm high having flanges of 20 mm and 30 mm long, the perimeter of ceiling fixed to wall/partition with the help of rawl plugs at 450 mm centre, with 25mm long dry wall screws @ 230 mm interval, including fixing of gypsum board to ceiling section and perimeter channel with the help of dry wall screws of size 3.5 x 25 mm at 230 mm c/c, including jointing and finishing to a flush finish of tapered and square edges of the board with recommended jointing compound , jointing tapes , finishing with jointing compound in 3 layers covering upto 150 mm on both sides of joint and two coats of primer suitable for board, all as per manufacturer's specification and also including the cost of making openings for light fittings, grills, diffusers, cutouts made with frame of perimeter

channels suitably fixed, all complete as per drawings, specification and direction of the Engineer in Charge .
12.0 mm thick tapered edge calcium silicate board is to be provided.(In control Room)

b) False ceiling in armstrong fine fissured butt edge tiles 595x595mm : Providing & fixing of armstrong fine fissured butt edge tile ceiling complete in all respects using armstrong channels, hangers etc. Item complete with all edge cut tiles and required cutting for lights, speakers, detectors, diffures, etc. Tile code-Armstrong fine fissured NF Butt edge (RH 99E)

c) False ceiling in gypsum board : P/F false ceiling, drops, ceiling " design in gypsum board. Providing and fixing at all heights false ceiling of 12.5MM thick tapered edge gypsum board confirming to IS: 2095 including providing and fixing of frame work made of special sections power pressed from MS Sheet and galvanized in accordance with Zinc coating 600 as per IS: 277 and consisting of angel cleats of size 25mm wide X 16mm thick with flanges of 22mm and 37mm at 1200 center to center one flange fixed to the ceiling with dash fastener 12.5mm DIA 40mm

6.10. Doors, Windows and ventilators

The details of doors and windows of the sub-station building shall be as under:

.

a) Steel door: Steel doors with Door Frames made with 1.5 mm (16 gauge) thick galvanized steel sheet pressed multi bend to S/L Rebate of Size 120 x 60 mm and Door Shutter shall be made with 18 gauge thick GI sheet pressed formed to provide a 46 mm thick fully flushed Door leaf skin panel shell with lock seam joint at stile edges and filled with Honey comb structure with metallic reinforcement at top, bottom and side surroundings. The item also includes the provision for required iron mongery and Powder coated Finish in RAL Color shades.
Each door leaf with 4 hinges (Make- Dauerhaft/ Hafele/ Equivalent), 1 no.of Door closure (make- Dauerhaft/ Hafele/ Equivalent), 1 no. of external trim (make- Dauerhaft/ Hafele/ Equivalent), , 1 no. Three Point Panic Bar (Make-Dauerhaft / Hafele/ equivalent) with necessary screws etc all complete.

b) Fire proof doors: Providing and fixing of Hollow metal fire rated doors as per IS 3614 part-1 & part-2 for stability and integrity. Pressed Galvanized steel confirming to IS 277 with the following specification. Recommended fire door should have been tested earlier of similar design at CBRI for maximum rating of 2hrs tested with vision panel of minimum 0.1 Sqmtr per shutter as requirement & application. Individual Test certificates should also be available for glass used in vision lites confirming the required fire ratings /panels being a part of the fire door assembly. Doors should be finished in Thermosetting Powder Coating desired RAL Shades. Manufacturer test certificate shall cover doors both single & double leaf doors and Hardwares should pass European certificate "CE" of conformity / UL with required fire ratings. Any deviation in specification and sheet thickness other than what is mentioned in the test certificates are not allowed. Proper label confirming the type of door and the hourly rating is mandatory. The manufacturer should be compliant to ISO 9001: 2008 and CE certified, manufacturer should be covered under IGBC scheme. Door frame shall be double rebate profile of minimum size 154mm X 77 mm made out of 1.60mm (16gauge) minimum thick galvanized steel sheet. NDRF 154x77 Frames shall be Butt jointed and field assembled with self bolted. The frames should be finished with Thermosetting Powder Coating in desired RAL Shade. All provision should be mortised, drilled and tapped for receiving appropriate hardware. Frames should be provided with back plate bracket and anchor fasteners for installation on a finished plastered masonry wall opening.

Door leaf shall be minimum 49mm thick fully flush double skin door with or without vision lite. Door leaf shall be manufactured from 1.25mm (18guage) minimum thick galvanised steel sheet. The internal construction of the door should be rigid reinforcement pads for receiving appropriate hardware. The infill material shall be Rockwool treated with Viper FRS 881 LH. All doors NSD 12049 shall be factory prepped for receiving appropriate hardware and provided with necessary reinforcement for hinges, locks, and door closers. The edges should be interlocked with a bending radius of 1.4mm. For pair of doors astragals has to be provided on the meeting stile for both active and inactive leaf. Vision lite wherever applicable should be provided as per manufacturers recommendation with a beeding and screws from inside. However the glass should be contraflam Door Lite 11 mm clear 120 min fire rated and partially insulated (EW120), Non Wired Toughened, interlatered glass having a sound reduction of >37dB, LT of 86% and compliant to class 2(B)2 category of Impact Resistance as per EN 12600 standard from Saint Gobain.
Each door leaf with 4 hinges (Make- Dauerhaft/ Hafele/ Equivalent), 1 no.of fire rated Door closure (make- Dauerhaft/ Hafele/ Equivalent), 1 no. of external trim (make- Dauerhaft/ Hafele/ Equivalent), 1 Fire Rated Wired Glass(200x300mm), (Make-Pilkington/ equivalent), 1 no. Three Point Panic Bar (Make-Dauerhaft / Hafele/ equivalent) with necessary screws

c) Aluminium Doors, Windows & Ventilators: Aluminium doors, Windows & Ventilators are Powder coated Aluminium Hindalco/ Jindal or equivalent extruded sections (minimum 3.0 mm thick) as per IS 733 & 1285 for windows and ventilators (minimum thickness of powder coating 50 micron of approved colour). Glazing for windows and ventilators will be hermetically sealed double glazing (DGU) with (6+12+6) i.e. 06 mm clear toughened glass +12 mm air gap + 6 mm toughened Glass (Heat reflective colour glass).

Door/ Window frame	101.60x44.50x3.18mm Code: 20011(Jindal)
Door/ Window Shutter	83.50x44.45x3.18mm Code: 19583 (Jindal)
Door/Windows middle section	83.50x44.45x3.27mm Code: 19593 (Jindal)
Square Tube Inside window Beading	25x25x2mm
Beading in Doors	Code: 19377 (Jindal)
Ventilator frame	101.60x44.50x3.18mm Code: 20011(Jindal)
Ventilator Middle frame	101.60x44.50x3.18mm Code: 20010 (Jindal)
Ventilator outerside beading Angle	35x35x2mm
Square Tube Inside ventilator Beading	25x25x2mm

d) Doors in various rooms of control room building shall be as per detailed schedules given in Table – 1. All entrance doors at ground floor/ cellar shall be steel doors. Partition door between adjacent panel rooms shall be 2 hours fire rated

e) The details for all other doors and windows shall be as per finish schedule Table-I and tender Drawings with the relevant IS code.

f) Floor springs and hydraulic door closer of make Dorma or equivalent to be provided.

g) To maintain proper size of opening for doors and windows, contractor shall provide rough round Aluminum tube of size 40 x 20 mm around all opening before plaster work.

h)The contractor shall provide a door and window sill of granite stone of size 18-20 mm.

i) All windows at ground floor/ cellar shall be provided with MS Grill.

6.11. Internal Electrification

Electrical wiring shall be through heavy duty concealed conduits. All fixtures and wiring shall be of best quality and ISI marked. (Fixtures shall be provided as per provision of energy conservation act). Internal wiring shall include all fittings and fixtures, control panel boards, main switch MCB's, etc.

6.12. Plumbing & Sanitation

a) All plumbing and sanitation works shall be executed to comply with the requirements of the appropriate bye-laws, rules and regulations of the Local Authority having jurisdiction over such matters. The Contractor shall arrange for all necessary formalities to be met in regard to inspection, testing, obtaining approval and giving notices etc.

b) PVC sintex or equivalent make Roof water tank of adequate capacity depending on the number of users for 24 hours storage shall be provided. Minimum 2 Nos. 1000 liters capacity shall be provided.

c) CPVC pipes & Fittings shall be used for internal & external piping (both concealed) work for potable water supply.

d) UPVC pipes shall be used for sanitary works above ground level.

e) Each toilet shall have minimum fittings

i) Wall Hung Water closet (European type W.C. pan) Jaquar/Kohler as per approval of Engineer In charge

ii) Half Stall Urinal (580 x 380 x 350 mm) Jaquar/Kohler as per approval of Engineer Incharge

iii) Counter top Wash basin (630 x 450 mm) Jaquar/Kohler as per approval of Engineer Incharge

iv) Bathroom mirror (600 x 450 x 6 mm thick) hard board backing

v) CP brass towel rail (600 x 20 mm) with C. P. brass brackets.

vi) Soap holder and liquid soap dispenser.

f) Water cooler for drinking water with adequate water storage facility shall be provided and located near control room instead of near toilet block.

g) 1 No stainless steel A ISI 304(18/8) kitchen sink with Drain board (510 x 1040 x 225mm bowl depth as per IS 13893 for pantry shall be provided complete with all fittings

h) All fittings, fastener, grating shall be chromium plated.

i) All sanitary fixtures and fittings shall be of approved quality and type manufactured by well known manufacturers. All items brought to site must bear identification marks of the type of the Manufacturer.

j) Soil, waste and drain pipes, for underground works shall be UPVC Pipes for areas not subject to traffic load. Heavy-duty cast iron pipes/ RCC NP-04 Pipes shall be used otherwise.

7.0 STORM WATER DRAINAGE FOR CONTROL ROOM BUILDING

The building drain shall be provided for the collection of storm water from the roofs. This water shall be collected in chambers and these chambers shall drain to the main drainage system of the station which shall in turn be connected to rain water harvesting recharge pits. Overflow of RWH Pits shall be connected to main drain

G.I Pipes of 150 MM dia rain water down comers shall be provided to drain off the rain water from the roof.. The number and size of down comers shall be governed by IS:1742 and IS:2527. Pipe will be covered by making suitable arrangement in structure and to be matched with external Finishes.

All external drains shall be covered with precast perforated RCC covers of suitable size and thickness.

For all buildings, suitable arrangement for draining out water collected from equipment blow down, leakages, floor washings fire fighting etc. shall be provided for each floor.

8.0 DEVELOPMENT OF YARD

8.1. Scope

8.1.1. The Contractor shall furnish all labour, equipments and materials required for complete performance of the work in accordance with the drawings, specifications and direction of the Owner.

8.1.2. Stone spreading shall be done in the Outdoor Sub-Station Yard area, Power Transformer, Capacitor Bank and wherever equipments and structures are to be provided under the present scope of work.

General Requirement:

The material required for site surfacing / stone filling shall be free from all types of organic materials and shall be of standard quality and as approved by the Owner.

Test for aggregates should be as follows:

a) Sieve Analysis limits (Gradation)

As per IS: 383-1970

The material to be used for stone filling / site surfacing shall be uncrushed / crushed / broken stone of 20 mm nominal size (ungraded single size) conforming to Table 2 of IS:383 - 1970.

Sieve Analysis (Gradation):
(IS: 383 - Table - 2)

Sieve size	% passing by weight

40mm	100
20mm	85-100
10mm	0 – 20
4.75mm	0-5

One test shall be conducted for every 50 cum.

b) Hardness:

Abrasion value (IS: 2386 Part-IV) - not more than 40%
Impact value (IS: 2386 Part-IV) - not more than 30% and frequency shall be one test per 50 cum with a minimum of one test per source

c) Flakiness Index

As per IS: 2386 Part I

8.1.3. Before taking up the final yard treatment, anti-weed treatment shall be applied in the switchyard area wherever yard treatment is to be done, and the area shall be thoroughly de-weeded including removal of roots. The recommendation of local agriculture or horticulture department shall be sought wherever feasible while choosing the type of chemical to be used. Nevertheless the effectiveness of the chemical shall be demonstrated by the contractor in a test area of 10M x 10M (approx.) and monitored over a period of two to three weeks by the Engineer-in-Charge. The final approval shall be given by Engineer-in-Charge and final approval given based on the results.

8.1.4. The anti-weed chemical shall be procured from reputed manufacturers. The dosage and application of chemical shall be strictly followed as per manufacturer's recommendation. The contractor shall be required to maintain the area free of weeds for a period of 1 year from the date of application of 1st dose of anti-weed chemicals

8.1.5. After all the structures/equipments are erected and anti-weed treatment is complete, the surface of the substation area shall be maintained, rolled/compacted to the lines and grades as decided by Engineer-in-Charge. De-weeding including removal of roots shall be done before rolling is commenced. Engineer-in-Charge shall decide final formation level so as to ensure that the site appears uniform free from undulations. The final formation level shall however be very close to the formation level using manual or machine roller with suitable water sprinkling arrangement to form a smooth and compact surface.

8.1.6. After anti-weed treatment & compaction of earth, final yard treatment shall be Carried out in the 4 layers as follows:

a. Providing and laying in position 75mm thick base layer of cement concrete 1:5:10 (1 cement: 5 coarse sand : 10 brick aggregate 40mm nominal size).

b. Flat brick flooring with over burnt bricks /class designation 100 as per approval of BRPL on the bed of 12 mm thick cement mortar 1:6 (1 cement : 6 coarse Sand) and filling the joints 12mm thick all around the bricks with same mortar.

c. Over the flat brick flooring a layer a final surface course of minimum 100 mm thickness of 20 mm nominal size (single size ungraded) broken stone shall be spread and uniformly leveled.

8.1.7. In areas that are considered by the Engineer-in-Charge to be too congested with foundations and structures for proper rolling of the site surfacing material by normal rolling equipments i.e., clear space between any 02 adjacent structures/foundation less than 01 meter, these adjoining structures/foundations shall constructed as a monolithic structure.

8.1.8. The sub grade shall be in moist condition at the time the cement concrete is placed. If necessary, it should be saturated with water for not less than 6 hours but not exceeding 20 hours before placing of cement concrete. If it becomes dry prior to the actual placing of cement concrete, it shall be sprinkled with water and it shall be ensured that no pools of water or soft patches are formed on the surface.

9.0 SUB-STATION TRENCHES

9.1. The cable trenches and precast removable RCC cover (with lifting arrangement) shall be constructed using RCC of minimum grade M25.

9.2. The RCC cable trench walls and raft shall not be less than 150 mm thick.

9.3. The cable trench wall shall be designed for the following loads.

- Dead load of 155 kg/m length of cable support + 75 Kg on one tier at the end.(Wall thickness Minimum-150 mm)
- Triangular earth pressure + uniform surcharge pressure of 2T/m2.

9.4. Cable trench covers shall be 50 mm thick. All trench covers/ drain covers shall have desired IRC Mesh of size 75x25mm (wire size 6 gauge/ 7.75 kg/m2) welded to M.S. frame of angle 50 x 50 x 6 mm all round the cover. Size of covers shall be as per site requirement / direction of Engineer in Charge.

9.5. Size of covers shall be per site requirement / direction of Engineer In Charge.

9.6. All cable trenches inside the buildings shall have covers comprising of 6 mm thick chequered plates fixed on angle 40 x 40 x 5 mm frame with arrangement of MS holes for lifting of cover.

9.7. Cable trench crossing the road/rails shall be designed for class AA loading of IRC/relevant IS Code and should be checked for transformer/reactor loading.

9.8. Trenches shall be drained. Necessary sumps be constructed and submersible sump pumps with stand by arrangement shall be supplied/ installed. Cable trenches shall not be used as storm water drains.

9.9. The top of cable trench shall be such that the surface rain water does not enter the trench.

9.10. All metal parts inside the trench shall be connected to the earthing system.

9.11. The trench bed shall have a perpendicular to the run. Trench wall shall not foul with the foundation. Suitable clear gap shall be provided.

9.12. The trench bed shall have a slope of 1/500 along the run & 1/250 perpendicular to the run.

9.13. All the construction joints of cable trenches i.e. between base slab to base slab and the junction of vertical wall to base slab as well as from vertical wall to wall and all the expansion, joints shall be provided with approved quality PVC water stops of approx. 230 x 5 mm size for those sections where

the ground water table is expected to rise above the junction of base slab and vertical wall of cable trenches.

9.14. Cable trenches shall be blocked at the ends if required with brick masonry in cement sand mortar 1:6 and plaster with 12mm/15mm thick 1:4 cement sand mortar.

9.15. Construction of Cable Trench 11Kv & 66Kv upto the plot boundary wall shall be in the scope of Vendor.

10.0 SUB-STATION DRAINAGE SYSTEM

Adequate site drainage system shall be provided by the Contractor. The Contractor shall design the storm water drainage system covering all culverts, ditches, drains, etc. The run off shall be calculated on the basis of maximum rainfall intensity that is likely to occur over the catchment area in one hour period on an average of once in ten years. The surface of the site shall be sloped to prevent the ponding of water. Outfall of drainage shall be suitably connected to rainwater harvesting recharge pits. While designing the drainage system following points shall be taken care of:

1. The maximum velocity for pipe drains and open drains shall be limited to 2.4m/sec and 1.8m/sec respectively. However, minimum non-silting velocity of 0.6m/sec shall be ensured. Longitudinal bed slope not milder than 1 in 1000 shall be provided.

2. For design of RCC pipes for drains and culverts, IS: 456 and IS: 783 shall be followed.

3. The Contractor shall ensure that water drains are away from the site area and shall prevent damage to adjacent property by this water. Adequate protection shall be given to site surfaces, roads, ditches, culverts, etc. to prevent erosion of material by water.

4. For pipe drains, concrete pipe of class NP3 shall be used. However, for road crossings etc. higher strength pipe of class NP4 shall be provided. For rail crossings, pipes conforming to railway loading standards or at least NP4 class shall be provided. Manholes shall be provided at every 30m interval, at connection points and at every change of alignment.

5. Pipe drains shall be connected through manholes at an interval of maximum 15mtrs. Effluents shall be suitably treated by the Contractor to meet all the prevalent statutory requirements and local pollution control norms and treated effluents shall be conveyed to the storm water drainage system at a suitable location for its final disposal.

6. All internal site drainage system, including the final connection/disposal to rainwater harvesting recharge pits shall be part of Contractor's scope including all required civil work, mechanical & electrical systems. The Contractor shall connect drain(s) at one or more points to rainwater harvesting recharge pits as feasible at site. The drainage layout of the substation shall be approved by the Owner & all works shall be carried out by the Contractor.

7. The drainage scheme and associated drawings shall be got approved from the Owner.

11.0 SUB-STATION ROAD

11.1. Inside substation roads to be provided for access along with car parking for at least three cars and two

wheeler parking for three vehicles. Building, Roads and parking are in the scope of bidder. Layout of the roads shall be based on layout drawing for the substation. Parking areas shall be provided for Site personnel and visitors as per layout drawing. Adequate turning space for vehicles shall be provided and bend radius shall be set accordingly. It has to be connected suitably with roads.

11.2. All substation roads shall be constructed so as to permit transportation of all heavy equipment up to 60MT. The main approach roads upto Control Room Building and other relevant roads will be RCC/ Cement Concrete Roads. The other connecting roads and pathways shall be of Paver blocks/ CC Road as per site requirement. The pavers blocks used for the roads shall be minimum 80mm thick with compressive strength not less than 450Kg/cm2.

11.3. Road construction shall be as per IRC standard.

11.4. Adequate provision shall be made for road drainage.

11.5. All the culverts and its allied structure (required for road/rail, drain trench crossings etc.) shall be designed for class AA loading as per IRC standard/IS code.

TRANSFORMER FOUNDATION, RAIL TRACK/ ROAD CUM RAIL TRACK

11.6. The Contractor shall provide a permanent transfer track system integrated with the power transformer foundation to enable installation and replacement of any failed unit by the spare unit located at the site. The transfer track system shall be suitable to permit the movement of any failed unit fully assembled with integral radiators and oil, without the de-energization of any other equipment in the station. This system shall enable the removal of any failed unit from its foundation to a repair area and the installation of the spare unit. This system, preferably, shall not interfere with the normal internal road and trench system. If trench/ drain crossings are required then suitable RCC culverts shall be provided in accordance with I.R.C Code/ relevant IS.

11.7. Rail track to be provided for all PTR foundations upto Grid Main Entry gate and shall be minimum of RCC M-25 grade. The space between the tracks shall be suitably filled with Concrete M-25. up to the formation level.. Suitable drainage system between the tracks shall be provided.

11.8. The rails shall be of first quality 52 kg/m medium manganese steel as per Indian Railway specification T-12-64 and its subsequent revision, joined together by fish plates as per Indian Railway specification T-1/57 and their drawing no. 090M and 27mm diameter fish bolts. No joint shall be provided at less than L/3 of the longest part.

11.9. The grating shall be made of MS flat of size 50mmx 5mm placed at 30mm center to center welded inclined (sideways) at an angle of 45-60 degrees from horizontal axis and 25mmx5mm MS flat at a spacing of 150mm at right angle to each other. Maximum length of grating shall be 1500mm and width shall not be more than 500mm. The gratings supported on ISMB 150mm shall be placed at the formation level and will be covered with 100mm thick layer of broken/crushed/non-crushed stone having size 40mm to 60mm which acts as an extinguisher for flaming oil.

12.0 OIL RECOVERY & BURNT OIL TANK

12.1. The oil recovery system shall be provided for all transformers (containing insulating oil or any flammable or polluting liquid) in order to avoid spread of fire by the oil and for environmental

protection.

12.2. Each transformer including oil conservator tank and cooler banks etc. shall be placed in a transformer pit surrounded by retaining walls (pit walls). The clear distance of the retaining wall from the transformer shall be 20% of the transformer height or 0.8m whichever is more. The transformer pit thus formed shall have a capacity equal to volume of oil in the transformers. The MS grating placed at the formation level shall be covered with 100mm thick gravel of 40mm nominal size which acts as an extinguisher for flaming oil.

12.3. Each transformer pit shall be drained towards a sump pit whose role is to recover the infiltrating water and the drained oil from the pit. The sump pit shall have sufficient capacity to receive without overflowing the oil content of large transformers plus the water content of any fixed fire fighting system and a certain quantity of rain water collected from the pit connected to it. The system shall be provided with air vents large enough to avoid over- pressure during operation. The whole internal surface of the sump pit should be impermeable.

12.4. The retaining walls which make up the transformer pit shall be made of reinforced cement concrete, with minimum grade of concrete as M-25.

12.5. The floor of the transformer pit shall be of Reinforced cement concrete of grade M25.

12.6. A Device showing level of sump pit shall be fitted along with the automatic submersible pumping system, which shall have sufficient capacity to evacuate the fire fighting & rainwater from the sump pit..

12.7. If the heights of the retaining wall which form the transformer pit exceed 60cm, steps shall be provided to facilitate access to the transformer and reactor.

12.8. When designing the transformer pit, the movement of the transformer must be taken into account.

12.9. It must be assured that the coefficient of crushed stone (granular material) penetration which fills the transformer pit will be retained regardless of the climatic conditions.

13.0 FIRE PROTECTION WALLS

13.1. General

13.1.1. Fire protection walls shall be provided, wherever required, in accordance with Tariff Advisory Committee (TAC) and certifying all mandatory safety clearances.

13.2. Material

13.2.1. The firewall shall be made up of reinforced cement concrete (at least M-25 grade) as per the system requirements. Materials used must conform to the standards of the National Fire Prevention Association & TAC Norms.

13.3. Fire Resistance

13.3.1. The firewall shall have a minimum fire resistance of 3 hours. The partitions, which are made to reduce the noise level of the transformers, shall have the same fire resistance where the partitions are also used as firewalls. The walls of the building, which are used as firewalls, shall also have a minimum fire resistance of 3 hours.

13.3.2. The firewall shall be designed to protect against the effect of radiant heat and flying debris from an adjacent fire.

13.4. Dimensions

13.4.1. The barrier shall extend at least 500 mm above the transformer bushing and pressure relief vent and length wise 600 mm beyond the transformer including any radiators and tap changer enclosure.

13.4.2. These dimensions might be reduced in special cases, as per the approval of owner where there is lack of space. A minimum of 2.0 meter clearance shall be provided between the Equipments e.g. Autotransformer/Power transformer.

13.4.3. The building walls, which act as firewalls, shall extend at least 1 m above the roof in order to protect it. Building wall adjacent to transformer shall act as fire resistance wall and shall be made up of solid concrete blocks

13.5. Mechanical Resistance

13.5.1. The firewall shall have the mechanical resistance to withstand local atmosphere conditions. If this wall shall serve as a support for equipment such as insulators etc, it mechanical rigidity must be increased. Connecting the walls by steel or other structures which may produce a reversing torque if overheated shall be avoided.

14.0 DESIGN CONSIDERATION FOR FOUNDATION

14.1. General

14.1.1. Work covered under this Clause of the Specification comprises the design and construction of foundations and other RCC constructions for switchyard structures, equipment supports, trenches, drains, jacking pad, pulling block, control cubicles, bus supports, Power transformer/Reactors, marshalling kiosks and auxiliary equipments, tanks or for any other equipment or service and any other foundation required to complete the work. This clause is as well applicable to the other RCC constructions.

14.1.2. Concrete shall conform to the requirements mentioned in IS: 456 and all the tests shall be conducted as per relevant Indian Standard Codes as mentioned in Standard field quality plan appended with the specification. A minimum grade of M25 concrete shall be used for all structural/load bearing members as per latest IS: 456 (latest revision).

14.1.3. If the site is sloppy, the foundation height will be adjusted to maintain the exact level of the top of structures to compensate such slopes.

14.1.4. The switchyard foundation's plinths shall be minimum 300mm above finished yard level.

14.1.5. Minimum 100mm thick lean concrete (1:4:8) shall be provided below all underground structures, foundations, trenches etc. to provide a base for construction.

14.1.6. Concrete made with Ordinary Portland cement shall be carefully cured and special importance shall be given during the placing of concrete and removal of shuttering.

14.1.7. The design and detailing of foundations shall be done based on the approved soil data and sub-soil conditions as well as for all possible critical loads and the combinations thereof. The Spread footing or pile foundation as may be required based on soil/sub-soil conditions and superimposed loads shall be provided.

14.1.8. If pile foundations are adopted, the same shall be cast-in-situ driven/bored or precast or under reamed type as per relevant. parts of IS Code 2911. Only RCC piles shall be provided. Suitability of the adopted pile foundations shall be justified by way of full design calculations. Detailed design calculations shall be submitted by the bidder showing complete details of piles/pile groups proposed to be used. Necessary initial load test shall also be carried out by the bidder at their cost to establish the piles design capacity. Only after the design capacities of piles have been established, the Contractor shall take up the job of piling. Routine tests for the piles shall also be conducted. All the work (design & testing) shall be planned in such a way that these shall not cause any delay in project completion. The contractor shall go for vertical load testing or lateral load testing. The contractor may choose static or dynamic load testing upon site condition and time constraint.

14.2. Design

14.2.1. All foundation shall be of reinforced cement concrete. The design and construction of RCC structures shall be carried out as per IS: 456 and minimum grade of concrete shall be M-25.

14.2.2. Limit state method of design shall be adopted unless specified otherwise in the specification.

14.2.3. For detailing of reinforcement IS: 2502 and SP: 16 shall be followed. TMT bars conforming to IS: 1786 shall be used as reinforcement. However, in specific areas mild steel (Grade I) conforming to IS: 432 can also be used. Two layers of reinforcement (on inner and outer face) shall be provided for wall & slab sections having thickness of 125 mm and above. For footings minimum cover shall be 50 mm.

14.2.4. RCC water retaining structures like storage tanks, etc. shall be designed as uncracked section in accordance with IS: 3370 (Part I to IV) by working stress method. However, water channels shall be designed as cracked section with limited steel stresses as per IS: 3370 (Part I to IV) by working stress method. Joints on each concrete lift shall be provided with approved quality PVC water stops of approx. 230 x 5 mm size to avoid water seepage through those joints

14.2.5. The procedure used for the design of the foundations shall be the most critical loading combination of the steel structure and or equipment and/or superstructure and other conditions, which produces the maximum stresses in the foundation or the foundation component and as per the relevant IS Codes of foundation design. Detailed design calculations shall be submitted by the bidder showing complete details of piles/pile groups proposed to be used.

14.2.6. Design shall consider any sub-soil water pressure that may be encountered following relevant standard strictly.

14.2.7. Necessary protection to the foundation work. If required shall be provided to take care of any special requirements for aggressive alkaline soil. Black cotton soil or any other type of

soil which is detrimental / harmful to the concrete foundations.

14.2.8. RCC columns shall be provided with rigid connection at the base. All columns shall be interconnected with RCC beams at Footing Level from all possible Directions/Suitable size raft footing will be provided.

14.2.9. All sub-structures shall be checked for sliding and overturning stability during both construction and operating conditions for various combinations of loads. Factor of safety for these cases shall be taken as mentioned in relevant IS Codes as stipulated elsewhere in the Specifications. For checking against overturning, weight of soil vertically above footing shall be taken and inverted frustum of pyramid of earth on the foundation should not be considered.

14.2.10. Earth pressure for all underground structures shall be calculated using coefficient of earth pressure at rest. Co-efficient of active or passive earth pressure (whichever is applicable). However, for the design of substructures of any underground enclosures, earth pressure at rest shall be considered.

14.2.11. In addition to earth pressure and ground water pressure etc., a surcharge load of 2T/Sq.m shall also be considered for the design of all underground structures including channels, sumps, tanks, trenches, and substructure of any underground hollow enclosure etc, for the vehicular traffic in the vicinity of the structure.

14.2.12. Following conditions shall be considered for the design of water tank in pumps house, channels, sumps, trenches and other underground structures:

a) Full water pressure from inside and no earth pressure, ground water pressure & surcharge pressure from outside (application only to structures, which are liable to be filled up with water or any other liquid).

b) Full earth pressure, surcharge pressure and ground water pressure from outside and no water pressure from inside.

c) Design shall also be checked against buoyancy due to the ground water during construction and maintenance stages. Minimum factor of safety of 1.5 against buoyancy shall be ensured ignoring the superimposed loadings.

14.2.13. Base slab of any underground enclosure shall also be designed for empty condition during construction and maintenance stages with maximum groundwater table (GWT). Minimum factor of safety of 1.5 against buoyancy shall be ensured ignoring the super-imposed loadings.

14.2.14. Base slab of any underground enclosure like water storage tank shall also be designed for the condition of different combination of pump sumps being empty during maintenance stages with maximum GWT. Intermediate dividing piers of such enclosures shall be designed considering water in one pump sump only and the other pumps sump being empty for maintenance.

14.2.15. The foundations shall be proportioned so that the estimated total and differential movements of the foundations are not greater than the movements that the structure or equipment is designed to accommodate.

14.2.16. The foundations of transformer shall be of block type foundation. Minimum reinforcement shall be governed by IS: 2974 and IS: 456.

14.2.17. The equipment foundations shall be checked for a factor of safety of 2.2 for normal condition and 1.65 for short circuit condition against sliding, overturning and pullout. The same factors shall be used as partial safety factor over loads in limit state design also.

14.3. Admixture & Additives

14.3.1. Only approved admixtures shall be used in the concrete for the Works. When more than one admixture is to be used, each admixture shall be batched in its own batch and added to the mixing water separately before discharging into the mixer. Admixtures shall be delivered in suitably labeled containers to enable identification.

14.3.2. Admixtures in concrete shall conform to IS: 9103. The waterproofing cement additives shall conform to IS: 2645. Owner shall approve concrete Admixtures/ Additives.

14.3.3. The contractor may propose and the Owner may improve the use of a water-reducing set-retarding admixture in some of the concrete. The use of such an admixture will not be approved to overcome problems associated with inadequate concrete plant capacity or improperly planned placing operation sand shall only be approved as an aid to overcoming unusual circumstances and placing conditions.

14.3.4. The water-reducing set-retarding admixture shall be an approved brand of Ligno-sulphonate type admixture.

14.3.5. The waterproofing cement additives shall be used as required/advised by the Owner.

14.3.6. Water proofing treatment on roof shall be as per Item No 22.7.1 - DSR 2012.

15.0 FENCING OF SUB-STATION (LIVE PART) AREA

15.1. General

Fencing shall be designed for the most critical loading combination taking care of wind force, stability, tension on wires, minimum requirements as per this clause for are materials IS 8910 and fabrication IS 800 as per recommendations

15.2. Areas Requiring Fencing

15.3. Fencing shall be providing for the following areas:

15.3.1. Site fencing for the complete Outdoor substation Yard area including Power transformer area. Gates shall be provided for men and machine / equipment to be taken out of the substation.

15.3.2. The IRC weld mesh Panels fencing of Capacitor Bank with roof cover (as per approved BRPL pattern).

15.3.3. Fencing of Aux. Substation Transformer (as per approved BRPL pattern).

15.4. Product Material

15.4.1. The minimum requirements are as follows:
IRC Weld Mesh fencing in accordance to relevant IS Code

- Size of IRC mesh — 25X75mm
- Nominal wire size — 6 gauge/ 7.75 kg/m2
- Width of fencing panel — 2400mm
- Height of fencing — 2000mm
- Fabrication of panels — 40mm Nominal bore M.S. Pipe (medium duty). Providing elbow/bend at corners & 40 x 5 mm M.S. flats in beading
- Paint — Aluminum Paint

15.4.2. Posts

- Intermediate Straining Post : 65mm Nominal bore, M.S. Pipe (Medium duty)
- Base Plate : 12mm M.S. Plate with 4 nos of hole. Nuts & bolts of suitable diameter.
- Paint : shall be painted with a coat of approved steel primer and two coats of synthetic enamel paint

The IRC weld mesh Panels shall be fixed to the post at the top and bottom of the 65mm Nominal bore, M.S. Pipe by Nuts and bolts. The Intermediate straining Posts to be erected by using holding down bolts and nuts grouted in toe wall around the Yard (the height of Yard) Posts shall be set in 1:1.5:3 Reinforced cement concrete blocks of minimum dimension (340 mm x 340 mm x 750 mm deep) and Toe wall to be at least 450 mm below & 450 mm above the yard level and 340 mm wide matched with External facade of the building(Grit-wash).

15.5. Installation

15.5.1. Fence shall be installed along switchyard line.

15.5.2. Post holes shall be excavated by approved methods.

15.5.3. Intermediate posts shall be spaced 2.5 m apart measured parallel to ground surface.

15.5.4. Concrete work shall conform to relevant clause. Post shall be braced and held in plumb position and true alignment and elevation until concrete has set.

15.5.5. Fence fabric shall not be installed until concrete has cured a minimum of 7 days.

15.5.6. Bottom and top of the fence panels shall be fixed with post by MS flats of 50 mm x 6 mm (min).

15.6. Toe wall of Brick masonry, 345 mm thk, with notches over 100 mm thick PCC (1:4:8) shall be provided below all fencing and shall be minimum 450 mm above and 450 mm below finished ground level. All exposed surfaces of brick toe wall shall be finished with Grit plaster/Matched with Building façade.

15.7. M.S. Gate

15.7.1. M.S. Gate of 6.0 m wide x 2.3 m height (2 nos) and 1.55 m x 2.3 m height (1 no) shall be provided to provide access through the fencing to the yard. M.S. Gate of 6.0 m wide x 2.3 m height shall be made in two leaf and 1.55 m x 2.3 m height shall be made in one leaf with locking arrangements. The gate shall be made with outer frame of 40 NB (Medium) M. S. Pipe. Weld mesh of opening size 25 x 75 mm and nominal wire size of mesh is 6 gauge/ 7.75 kg/m2 (as per standard approved drawing of BSES).

15.7.2. Hinges, al-drops and other accessories shall be provided for effective working of the gate.

16.0 GATES

16.1. The gates shall be fabricated with welded joints to achieve rigid connections. The gate frames shall be painted with one or more coat of approved steel primmer and two coats of synthetic enamel paint.

16.2. Gates shall be fitted with approved quality iron hinges. Hinges shall permit gates to swing through 180 degree.

16.3. Gates shall be fitted with galvanized chain hook or gate hold back to hold gates open. Double gates shall be fitted with centre rest and drop bolt to secure gates in closed position.

16.4. Main Gate shall be at least 6m wide. Gates shall be installed in locations shown on drawings. Next to the main gate, a small gate (1.25 m wide, single leaf) within main gate shall also be provided as a wicket gate.

16.5. Bottom of main gates (both at entry and exit) shall be set approximately 40mm above ground surface with necessary guiding mechanism i.e., wheels at bottom along with a track allowing its smooth movement on floor shall be fitted as per site requirement.

16.6. The gates shall be provided with suitable locking arrangement.

17.0 MISCELLANEOUS GENERAL REQUIREMENTS

17.1. Dense concrete with controlled water cement ratio as per IS-code shall be used for all underground concrete structures such as pump-house, tanks, water retaining structures, cable and pipe trenches etc. for achieving water tightness.

17.2. All joints including construction and expansion joints for the water retaining structures shall be made water tight by using PVC ribbed water stops with central bulb. However, kicker type (externally placed) PVC water stops shall be used for the base slab and in other areas where it is required to facilitate concreting. The minimum thickness of PVC water stops shall be 5 mm and minimum width shall be 230 mm.

17.3. All mild steel parts used in the water retaining structures shall be hot-double dip galvanized. The

minimum coating of the zinc shall be 610 gm/sqm. for galvanized structures and shall comply with IS:2629 and IS:2633. Galvanizing shall be checked and tested in accordance with IS:2633. The galvanizing shall be followed by the application of an etching primer and dipping in black bitumen in accordance with IS:3416.

17.4. A screed concrete layer not less than 100 mm thick and of grade not weaker than M10 conforming to IS: 456 shall be provided below all water retaining structures. A sliding layer of bitumen paper or craft paper shall be provided over the screed layer to destroy the bond between the screed and the base slab concrete of the water retaining structures.

17.5. Bricks having minimum 100 kg/cm2 compressive strength can only be used for masonry work. Contractor shall ascertain himself at site regarding the availability of bricks of minimum 100 kg/cm2 compressive strength before submitting his offer.

17.6. Doors and windows on external walls of the building (other than areas provided, with insulated metal claddings) shall be provided with RCC sunshade over the openings with 150 mm projection on either side of the openings. Projection of sunshade from the wall shall be minimum 600mm over window & door openings.

17.7. RCC staircase shall be provided for access to roof of the building. All stairs shall have maximum riser height of 150 mm and a minimum tread width of 300 mm Minimum width of stairs shall be 1500 mm. Steel doors shall be provided in the Mumty and height of Mumty should be at least 2.6m.

17.8. Angles 50x50x6 mm (minimum) with lugs shall be provided for edge protection all round cut outs/openings in floor slab, edges of drains supporting covers, edges of RCC cable/pipe trenches supporting covers, edges of manholes supporting covers, supporting edges of manhole precast cover and any other place where breakage of comers of concrete is expected.

17.9. Anti termite chemical treatment shall be given to column pits, wall trenches, foundations of buildings, filling below the floors etc. as per IS: 6313 and other relevant Indian Standards.

17.10. All reinforcement in RCC structures and structural steel members shall be of make TATA/ SAIL/ JSW.

17.11. The railing of staircase shall be 0.9 m average height comprising of stainless steel (Grade 304) Jindal Make member minimum 3 mm thick made of Hollow tubes, channels, plates etc., including welding, grinding, buffing, polishing and making curvature (wherever required) and fitting the same with necessary stainless steel nuts and bolts complete, i/c fixing the railing with necessary accessories & stainless steel dash fasteners , stainless steel bolts etc., of required size, on the top of the floor or the side of waist slab with suitable arrangement as per approval of Engineer-in-charge.

17.12. Loading/Unloading Platform stainless steel (Grade 304) Jindal make Balcony Railing hollow pipe 80x40x3 mm hand rail, horizontal pipes 40x20x3 mm .

17.13. All underground water retaining concrete structures shall have water proofing cement Plaster additive conforming to IS: 2645 water proofing for walls and base slab of all underground concrete structures like basements pump houses etc. shall be by "Injection Method".

17.14. All buildings shall have 750mm wide plinth protection all round.

17.15. Providing Fixing of Granite (Tan brown shade) to all Periphery of s/stn building 1000 mm above from Road level to give aesthetical look as per EIC shall be in scope of vendor.

17.16. Monorails, Monorail girders and fixtures shall be provided by the Bidder wherever required.

17.17. All foundations embedment, inserts, blockouts required for equipments shall be provided by bidder.

17.18. 50mm thick DPC shall be provided before laying of masonry (item no. 4.11 & 4.13-DSR 2012).

17.19. BSES Display board is to be provided of required size (3.0mx1.20m) and as per approved pattern /drawing of BRPL with name of the grid- ACP sheet signage with reverse 2D matter with LED Module Light having Automatic Timer on & off System.

17.20. Water and Sewer line connections to be done along with approval of CIVIC agency.

17.21. The details given in tender drawings shall be considered along with details available in this section of the specification while deciding various components of the building.

17.22. Balance Plot area should be covered with CC pavement/Pavers as per EIC

Items/components of buildings not explicitly covered in the specification but required for completion of the project shall be deemed to be included in the scope

18.0 INTERFACING

The proper coordination & execution of all interfacing civil works activities like fixing of conduits in roofs/walls/floors, fixing of lighting fixtures, fixing of supports/ embedments, provision of cutouts etc for indoor illumination, ventilation & Air conditioning shall be the sole responsibility of the Contractor. He shall plan all such activities in advance and execute in such a manner that interfacing activities do not become bottlenecks and dismantling, breakage etc. is reduced to minimum

19.0 FIELD QUALITY PLAN FOR CIVIL WORKS

The field quality plan for all civil works shall be in accordance with CPWD specification and other relevant Indian Standard Codes. All quality checks and procedures shall be followed as per relevant CPWD norms.

20.0 WATER SUPPLY

20.1. Water for construction work as well as drinking purpose shall be in the scope of Contractor.

20.2. The Contractor shall carry out all the plumbing/erection works required for supply of water in control room building.

20.3. A scheme shall be prepared by the Contractor indicating the layout and details of water supply which shall be got approved from the Owner before actual start of' work including all other incidental items not shown or specified but as may be required for complete performance of the works.

20.4. Either Bore-well or Connection from respective owners/DJB water source along with required pumps for water supply shall be in the scope of contractor. Although contractor shall provide an underground

water reservoir, near the gate of minimum 20 M3 or sufficient capacity for refill of one fire Tanker. The water reservoir shall be provided with a high-pressure pump and single point fire hydrant outlet for refilling the fire tender in case of fire and emergency with proper waterproofing treatment & ceramic tiles finish on walls & Floor. Necessary valve shall be provided in the outlet.

20.5. The details of tanks, pipes, fittings, fixtures etc for water supply shall be approved by engineer in charge.

21.0 SEWERAGE SYSTEM

21.1. Sewerage system shall be provided for control room building.

21.2. The Contractor shall construct septic tank and soak pit suitable for 20 users or make connection with nearby existing sewerage system of Civic agencies/respective owners.

21.3. The system shall be designed as per relevant IS Codes.

21.4. External sewerage system including connection with internal services of building shall be within the scope of this contract. The connection and laying of sewer lines and manholes upto the point of connection with the sewer line of local civic agency if existing within 100m from any point of boundary of sub-station. If the sewer line of local civic agency does not exist in the area then septic tank with soak pit shall be constructed for control room building (suitable for 20 users). Vendor shall obtain necessary approval from civic agency for laying of sewer lines as aforesaid and connection thereof. Any municipal charges for approval and connection shall be paid by BRPL directly to the local authorities.

22.0 RAIN WATER HARVESTING

(a) Providing two recharge structures with bore wells at different locations as per approved drawing for rainwater harvesting system. The recharge structures shall be suitably located within the sub-station. Branch drains from the main drain carrying rainwater from entire switchyard, constructed in accordance with clause 9 & 10 shall be connected to the recharge structures.

(b) The internal dimensions of recharge shafts shall be 3.0 m X 2.5 m with 230mm thick lining of brick work upto a depth of 2.0 meter from Finished Ground level and 345mm thick brickwork below 2.0 meter depth. The brickwork shall be constructed with cement mortar 1:6 (1cement: 6 coarse sand). The overall depth of shaft shall be 3.0 meter below invert level of drain. The shaft shall be covered with RCC slab for a live load of 300 kg. per sqm. Two openings of size 0.7 x 0.7 meter shall be provided in the RCC cover slab. An iron cover made of 5mm thick chequered plate with hinges shall be provided on the openings. Galvanized M.S. rungs of 16mm diameter at spacing of 300 mm shall be provided in the wall of shaft below the opening in the RCC slab to facilitate cleaning of shaft.

(c) A 300 mm diameter bore well shall be drilled in the centre of the shaft. The depth of bore well shall be 5.0 meter more than the depth of sub soil water.

(d) A 100 mm diameter medium duty MS pipe conforming to IS: 1161 shall be lowered in the bore well keeping bail plug towards bottom of bore well. The pipe shall have 1.58mm holes for 4.0 meter length starting from 1.0 meter from bottom of bore well. Holes of 3.0mm diameter shall be provided for a length of 2.0 meter starting from the bottom level of coarse sand and down wards.

The overall length of pipe shall be equal to total depth of bore well plus depth of shaft.

(e) Gravel of size 3mm to 6mm shall be filled around 100 diameter MS pipe in the bore well. The shaft shall be filled with 500 mm thick layers each from the bottom of shaft with boulders of size 50mm to 150mm, gravel of size 5mm to 10mm, coarse sand having particle size 1.5mm to 2.0mm and boulders of size not less than 200mm respectively.

(f) Drawing based on above details of recharge structure for rainwater harvesting has to be prepared by contractor and to be approved from engineer in charge.

23.0 STATUTORY RULES

23.1. Contractor shall comply with all the applicable statutory rules pertaining to factories act (as applicable far the State), Fire Safety Rules of Tariff Advisory Committee. Water Act for pollution control, Energy Conservation Act, etc.

23.2. Provisions for fire proof doors, no. of staircases, fire separation wall, plastering on structural members (in fire prone areas) etc. shall be made according to the recommendations of Tariff Advisory Committee.

23.3. Statutory clearance and norms of State Pollution Control Board shall be followed as per Water Act for effluent quality from plant.

23.4. Foundation system adopted by Bidder shall ensure that relative settlement and other criteria shall be as per provision in IS: 1904 and other Indian Standards.

23.5. All water retaining structures designed as uncracked section shall also be tested for water tightness at full water level in accordance with clause no. 10 of IS :3370 (Part-I).

23.6. Construction joints shall be as per IS: 456.

23.7. All underground concrete structures like basements, pumps houses, water retaining structures etc. shall have plasticizer cum water proofing cement plaster additive conforming to 1S:9103. In addition, limit on permeability as given in 1S:2645 shall also be met with. The concrete surface of these structures in contact with earth shall also be provided with two coat of bituminous painting for water/damp proofing. In case of water leakage in the above structures, Injection Method shall be applied for repairing the leakage.

23.8. All building/construction materials shall conform to the best quality specified in CPWD specifications if not otherwise mentioned in this specification.

23.9. All tests as required in the standard field quality plans of CPWD or as per sound engineering practices have to be carried out.

23.10. The type and treatment of all foundation shall be as per recommendation of geo-technical investigation reports.

24.0 TESTS FOR MATERIAL / WORKMANSHIP

All tests required for various bought out items, materials, quality of workmanship or any other tests as desired by Project Manager and as specified in technical specification shall be carried out by the

Bidder at his own cost in the presence of the authorized representative of the Engineer.

The quality assurance check lists are given at the end of respective chapters / sections of these specifications. The Bidder shall submit comprehensive Quality Assurance plan for all materials, equipment, workmanship, services etc. and get it approved from the Engineer. This shall include setting up a test laboratory at site. However, such check list shall in no way limit the liability and responsibility of the Bidder in regard to quality of workmanship as detailed out in the specifications.

The sampling & testing of the construction materials shall be in accordance to latest CPWD Specifications related to all activities of the building and other civil construction works.

25.0 DRAWINGS

The successful Bidder shall first submit the structural design calculations along with general arrangement drawings for approval. After the approval of the design calculations by the owner detailed construction drawings shall be prepared and submitted for Employer's approval along with revised design calculations if required within 15 days. Required number of sets of design calculations, drawings and documents shall be submitted by the Bidder.

BOQ, Calculations and other documents etc. shall be on A4 size paper. All the drawings shall be drawn to the scale as far as possible on A1 size or larger size paper and should be legible. The submission shall be

- Three (03) Sets of approved and released for construction drawings/BOQ/Calculation for Owners reference.
- Six (06) Sets of final As Built drawings, design, BOQ, Calculation & O&M manual for all equipments supplied.
- Soft copies of all drawings/Documents/calculation in Auto CAD and Microsoft office file format as applicable.

Drawings shall be treated as submitted, only if provided with BOQ (If applicable). Transmittal sheet shall be mandatory to attach with all the drawing and documents. Format for transmittal shall be provided to successful bidder for drawing approvals etc.

26.0 ALTERATION IN SPECIFICATION AND DESIGN

The Project Manager shall have the power to make any alteration and omissions from, additions to or substitution for the original specifications, drawings, designs and instructions that may appear to him to be necessary during the progress of the work and the Bidder shall carry out the work in accordance with any instruction which may be given to him in writing signed by the Project Manager and such alterations, omissions, additions or substitutions shall not invalidate the contract and any altered, added or substituted work which the Bidder may be directed to do in the manner above specified as part of the work shall be carried out by the Bidder on the same conditions in all respects on which the Bidder agreed to do the original contract work. The time for completion of work shall be altered in the proportion that the altered, added or substituted work bears to the original contract work and the certificate of the Project Manager shall be conclusive as to such proportion.

The rates for the altered items of work shall be worked out on the following basis and necessary

alternations in the total amount shall be made on that basis:

(a) The rates to be reimbursed or recovered shall be taken as same as those given in CPWD-DSR (2021) for those items for which the rates are available in CPWD - DSR (2021).

(b) Rates for the items not covered under CPWD - DSR (2021) shall be derived from the rates of similar items of CPWD schedule of rates.

(c) In the event there is no similar class of work specified in the CPWD - DSR (2021), the Bidder shall work on a rate for such an item on the basis of the prevalent market rates for materials / men / machines and submit the same together with the detailed analysis to the Project Manager within 7 days. The Project Manager shall thereafter review the correctness and then conduct necessary negotiations with the Bidder to arrive at a mutually agreeable rate. Engineer's decision in regard to rates of such items shall be final and binding on the Bidder.

In case of conflict between this chapter and other Chapters of Technical Specifications, provisions given in this chapter shall govern.

\

Table 1- Finishing Schedule

No	Location	Flooring	Wall Internal	Ceiling	Doors, Windows, Ventilators
1	Control room	52 mm thick CC flooring with concrete hardener topping & Dust proof Epoxy Paint & False Flooring as per specification clause No-6.5.1	Plastic emulsion Paint on smooth surface applied with putty	Oil bound washable distemper on smooth surface applied with putty to RCC Ceiling & P/F of False ceiling approved by EIC as per specification clause no. 6.9	Doors: 02 hours fire rated doors as per clause no. 6.10.b Windows & Ventilators: Aluminium Windows & Ventilators As per clause no. 6.10.c
2	Office rooms, maintenance room, Reception Lobby/ Passage, staircase area/ outdoor steps	Granite Flooring	Plastic emulsion Paint on smooth surface applied with putty	Oil bound washable distemper on smooth surface applied with putty	Doors: Steel door as per clause no. 6.10.a Windows & Ventilators: Aluminium Windows & Ventilators As per clause no. 6.10.c
3	Toilet	Anti skid Ceramic tiles with white cement.	Ceramic glazed tile for toilet, for pantry above working platform up to 750 mm.	Oil bound washable distemper on smooth surface applied with putty	Doors, Windows & Ventilators: Aluminium Doors, Windows & Ventilators As per clause no. 6.10.c
4	Cellar	52 mm thick CC flooring with concrete hardener topping	Plastic emulsion Paint on smooth surface applied with putty	Oil bound washable distemper on smooth surface applied with putty	Doors: Steel door as per clause no. 6.10.a Windows & Ventilators: Aluminium Windows & Ventilators As per clause no. 6.10.c
5	Other areas not specified	Double charged Vitrified tile of size 600x600mm of make Kajaria or equivalent	Plastic emulsion Paint on smooth surface applied with putty	Oil bound washable distemper on smooth surface applied with putty	Doors: Steel door as per clause no. 6.10.a Windows & Ventilators: Aluminium Windows & Ventilators As per clause no. 6.10.c

6	Switchgear Room/GIS Room	Self leveling Epoxy flooring 2mm thick after application of 2mm thick screed over 52 mm thick CC flooring with concrete hardener topping	Plastic emulsion Paint on smooth surface applied with putty	Oil bound washable distemper on smooth surface applied with putty	Doors: 02 hours fire rated doors as per clause no. 6.10.b Windows & Ventilators: Aluminium Windows & Ventilators As per clause no. 6.10.c
8	All external surfaces (S/stn building, boundary wall and other structures) shall have Texture finish of Make UTTPL (Ultratech Texture Paints Pvt. LTD) The texture finish and shade as approved by BRPL.				

SWATI STRUCTURE SOLUTIONS PVT. LTD.

An (ISO/IEC-17025) Accredited Laboratory
Kh. No. 7/9, Ground Floor, Nangloi, Jat Harsukh BLK, Prem Nagar Delhi-110041
E-mail: swatinabllab@gmail.com Ph. No. 9811016049
ISO/IEC 17025:2017 NABL TC No. T-11023

SOIL INVESTIGATION/ NON-DESTRUCTIVE TESTING (NDT) / BUILDING MATERIAL /CHEMICALS/MINERATS/WATER CALIBRATION & INSTRUMENTS SUPPLY SERVICES

Name of Work:

Geotechnical Soil Investigation of Establishment of 66/11 KV grid at Molarband, Div. SVR

Client:

BSES RAJDHANI POWER LIMITED
1ST FLOOR; C-BLOCK, BSES BHAWAN,
NEHRU PLACE DELHI, -110019.
TELEPHONE: 91-011 -39999444

REPORT REF. NO.	REVISION NO.	DATE
0825/SSSPL/BSES/ MOLARBAND, DIV. SVR /RT-15	----------	29-09-2025

National Accreditation Board for Testing and Calibration Laboratories

CERTIFICATE OF ACCREDITATION

SWATI STRUCTURE SOLUTIONS PRIVATE LIMITED

has been assessed and accredited in accordance with the standard

ISO/IEC 17025:2017

"General Requirements for the Competence of Testing & Calibration Laboratories"

for its facilities at

KH. NO. 7/9, GROUNDFLOOR, NANGLOI JAT HARSUKH BLK PREM NAGAR, WEST DELHI, DELHI, INDIA

in the field of

TESTING

Certificate Number: TC-15277

Issue Date: 11/01/2025 **Valid Until:** 10/01/2029

This certificate remains valid for the Scope of Accreditation as specified in the annexure subject to continued satisfactory compliance to the above standard & the relevant requirements of NABL.
(To see the scope of accreditation of thislaboratory, you may also visit NABL website www.nabl-india.org)

Name of Legal Entity: SWATI STRUCTURE SOLUTIONS PRIVATE LIMITED

Signed for and on behalf of NABL

Anita Rani
Director

N. Venkateswaran
Chief Executive Officer

TABLE OF CONTENTS

		Page No.
1.	Introduction	3
2.	Scope of Work	3
3.	Location of Bore Holes	3
4.	Field Investigation	4
5.	Ground Water Table	5
6.	Laboratory Tests	5
7.	Strength Characteristics of Soil	9
8.	Design Criteria	10
9.	Design Methodology	11
10.	Discussion on soil profile	15
11.	Chemical analysis	15
12.	Resistivity Test	16
13.	Bearing capacity	17
14.	Recommendations	18
15.	Closure	18
16.	Soil Profile	19
17.	Grain Size Analysis	22
18.	Results of Direct Shear Test	25
19.	Subsoil Profile (Fig. A)	27
20.	Site Photo	28
21.	List of Reference IS Codes	29

ABBREVIATION

BH	Borehole
ERT	Earth resistivity testing
IS	Indian standard
N Values	No of blows/30cm from standard penetration test
γ_d	Dry Density of Soil
N_m	Uncorrected SPT blow count
Q_{ab}	Allowable Net Bearing capacity
C	Cohesion in N/mm^2
B	Width of footing in m
D	Depth of Foundation in m
G	Specific Gravity
e	Void ratio
d_q, dr, d_c	Depth factors
S_q, S_c, $S\gamma$	Shape factors
I_q, Ir, I_c	Inclination factors
N'_c, N'_q, N'r,	Bearing capacity factor
q	Total surcharge at the base level of foundation
W’	Water table correction factor
Φ	Angle of shearing resistance of soil
N_R	Recorded standard penetration value
N_C	Corrected standard penetration value
k	Modulus of sub-grade reaction
EGL	Existing Ground Level
Qu	Ultimate bearing capacity
qs	Safe Bearing Capacity

1.0 INTRODUCTION

The work of Geotechnical Soil Investigation of Establishment of 66/11 KV grid at Molarband, Div. SVR. has been assigned to M/S Swati Structure Solutions Pvt. Ltd., having its address at KH No.7/9, Ground floor, Nangloi, Jat Harsukh BLK, Prem nagar, Delhi- 110041 by the BSES Rajdhani Power Limited with its address at 1st Floor; C-Block, BSES Bhawan, Nehru Place Delhi, -110019. The report presents the details of field investigation carried out in the month of September 2025 and the results are obtained from various fields and laboratory tests based on computation. Foundation analysis has been done and recommendation has been made as regards to suitable type of foundations to be provided for the proposed structure.

2.0 SCOPE OF WORK

a) Mobilization and demobilization of all relevant men and machinery including all T&P required for carrying out soil investigation work as per direction of Engineer-in-charge.
b) Drilling 3 Nos. Bore holes up to the depth of 15 or refusal whichever is earlier below the ground surface by shell and auger method.
c) Conducting Standard Penetration Test at 1.50m regular interval as per Indian Standard Specification.
d) Collection of disturbed and undisturbed soil samples from the bore holes at regular interval of 3.0m or change of strata.
e) Carrying out lab test to find physical properties of sub soil strata.
f) Recording of water table level in the bore hole after completion of bore hole.
g) Preparation and submission of report incorporating all the data obtained from the field and laboratory tests.
h) Evaluation of SBC based on shear & settlement Criteria.
i) The field testing for bore holes has been done on 03/09/2025 to 05/09/2025

3.0 LOCATION OF BORE HOLES

Three nos. of bore holes are drilled at the proposed site. All the test locations are given by the client.

4.0 FIELD INVESTIGATION

4.1 Grain size distribution of soil at various depths has been carried out and grain size distribution curve is drawn. The soil type and shear parameters as obtained in the various bore-hole are given in the table below:

Bore Hole (BH) No.	Subsoil Layers	Soil Type	Shear Parameters	
			Cohesion c in Kg/cm^2	Action of friction (in Degree)
BH-1	Layer-1 (0.0m to 1.0m)	Filled up soil	-	-
	Layer-2 (1.0m to 15.0m)	Silty Sand	0.00	28^0
BH-2	Layer-1 (0.0m to 0.7m)	Filled up soil	-	-
	Layer-2 (0.7 to 15.0m)	Silty Sand	0.00	28^0
BH-3	Layer-1 (0.0m to 0.6m)	Filled up soil	-	-
	Layer-2 (0.6 to 15.0m)	Silty Sand	0.00	28^0

4.2 Subsurface Exploration

Subsurface Exploration was carried out in 3 no. of bore hole at site using rotary drilling. The depth of bore- hole was taken from the existing ground surface.

4.3 Boring

The bore holes of 100 mm dia. were drilled by using rotary drilling method to collect soil sample up to the specified depth.

4.5 Standard Penetration Test (SPT)

Standard penetration tests as per IS: 2131-1981 was conducted at the bore hole, each at 1.5m interval or change of strata. The tests were performed by using a standard split spoon sampler attached to 'A' rod placed at the test level in the bore hole. The sampler was driven to a depth of 45cm by means of a standard hammer weighing 63.5 Kg. falling freely through a vertical height of 75 cm. Blows required for each 15 cm penetration (Total penetration 45cm) were recorded and the number of blows for last 30cm penetration of the sampler was taken as N values. Blows for first 15 cm penetration of the sampler in

each test, were discarded owing to the possible disturbance of the strata during auguring operations. The observed and the corrected N SPT values (IS: 2131-1981) are given with graphical representation on and soil profile.

5.0 GROUND WATER TABLE

Water table was not encountered in the bore hole up to the depth of exploration.

6.0 LABORATORY TESTS

A visual and discrete examination of all the soil samples collected was carried out for deciding the number and type of tests as well as the number of samples to be tested from each bore hole. Based on the strata met at site the following tests were conducted on samples to classify them and to evaluate their index and Engineering properties

a) Grain size distribution
b) Bulk density and Moisture content
c) Direct Shear Test
d) Triaxial Tests
e) Liquid limits and plastic limits
f) Specific Gravity
g) Chemical analysis of soil and water for chloride and sulphate content.
h) Electrical resistivity test.

a) Grain Size Distribution

Grain size distribution of the soil is determined by sieving the soil sample in a set of IS sieves: 4.75mm, 2.36mm, 0.825mm, 0.6mm, 0.425mm, 0.30mm, 0.150mm, 0.075mm size. Grain Size Analysis curve has been plotted and attached in the appendices of this report for the soil samples collected from various depths of bore-holes.

b) Bulk Density And Natural Moisture Content

Undisturbed samples were collected from the boreholes in thin wall steel sample tubes by taking the dimensions and weight of these sample tubes, the bulk density of the soil is determined. Moisture content of the soil has been calculated by Oven Drying Method.

c) Direct Shear Test

A direct shear test is a laboratory or field test used by geotechnical engineers to measure the shear strength properties of soil or rock material, or of discontinuities in soil or rock masses. The test is performed on specimens from undisturbed soil sample. A specimen is placed in a shear box which has two stacked rings to hold the sample; the contact between the two rings is at approximately the mid-height of the sample. A confining stress is applied vertically to the specimen, and the upper ring is pulled laterally until the sample fails, or through a specified strain. The load applied and the strain induced is recorded at frequent intervals to determine a stress-strain curve for each confining stress. Several specimens are tested at varying confining stresses to determine the shear strength parameters, the soil cohesion (c) and the angle of internal friction (commonly friction angle) (ϕ). The results of the tests on each specimen are plotted on a graph with the peak (or residual) stress on the x-axis and the confining stress on the y-axis. The y-intercept of the curve which fits the test results is the cohesion, and the slope of the line or curve is the friction angle.

d) Triaxial Test

In this test undisturbed soil specimen is subjected to 3 compressive stresses at right angle to one another, horizontally coffining constantly and the vertical stress is gradually increased until each specimen failsto evaluate cohesion and angle of shearing resistance. Triaxial shear tests have been performed by subjecting the cohesive-soil samples to major principal stresses in increase steps. The test specimen is allowed to consolidate under a number of successive increments of vertical pressure, each pressure increment being maintained constant until the deformation ceases, generally in 24 hours. The successive pressure employed are 0.10, 0.20, 0.40, 0.60, 0.80, 1.0, 1.5, 2.0, 2.5, 3.0, 3.5, 4.0 and 5.0 kg/cm2. Thus, these stress increments are progressively carried-out until the failure of the specimen. The dial gauge readings for measuring the deformation are taken after the application of the pressure increment at the following total elapsed time of 0.25, 1.0, 4.0, 9.0, 16.0, 25.0, 36.0, 49.0, 64.0, 0.81 and 100 minutes until the consolidation is completed.

e) Atterberg Limits

Atterberg Limits in the form of liquid limit, plastic limit and shrinkage limit are determined for the soil to establish its consistency. In the case of cohesion less soil, plastic limit is first determined and if it cannot be determined the soil sample is reported to be non-plastic.

f) Specific Gravity

Specific Gravity of the soil has been determined by Specific Gravity Bottle.

g) Chemical analysis of soil and water for chloride and sulphate content.

i. Chemical analysis for pH in water as per IS: 3025 (P-11)

Switch on the instrument. Calibrate the pH meter with buffer solution with 4.0, 7.0. After calibrate the instrument take direct reading of sample

ii. Chemical analysis for Organic & In-organic matter in water as per IS: 3025 (P-16 & 18)

Take 100 ml sample in beaker, take initial wt. of beaker digest on the hot plate put the beaker in the oven at 1100 C for one hour take final wt. of beaker, Put the beaker in furnace at 5500C

Calculation, Organic matter, mg/l: - (c- d) * 10^6 / Volume of sample

In- Organic matter, mg/l :- (e-c) * 10^6 / Vol. of sample taken

iii. Chemical analysis for Total Suspended matter in water as per IS: 3025 (P-17)

Take 100 ml sample in beaker, take initial wt. of beaker digest on the hot plate put the beaker in the oven at 1100 C for one hour take final wt. of beaker.

Calculation, mg/l: - (Final wt. - Initial wt.) * 10^6 / Volume of sample

iv. Chemical analysis for Acidity in water as per IS: 3025 (P-22)

Take 100 ml sample in conical flask add few drops of indicator in the sample titrate with NaOH (0.02N) until faint pink color appears burette reading in the result in ml of acidity.

v. Chemical analysis for Alkalinity in water as per IS: 3025 (P-23)

Take 100 ml sample in conical flask add few drops of mixed indicator titrate with H2SO4 until light pink color appears burette reading in the result in ml of Alkalinity.

vi. Chemical analysis for Sulphate in water as per IS: 3025 (P-24)

Take 100 ml sample in beaker add few ml of hydrochloric acid and some drops of methyl red indicator evaporate on hot plate and then add barium chloride in the solution set the solution for 4 hours and then filter with what man filter paper ignite the filter paper at 8000C take the wt. of crucible.

Calculation mg/l: - wt. of residue *411500*0.833 / Volume of sample taken

vii. Chemical analysis for Chloride in water as per IS: 3025 (P-32)

Take 25 ml sample in conical flask add few drops of potassium chromate indicator then Titrate with Silver nitrate until bricks Color appears note the reading of Burette use same procedure for blank titration.

Calculation, mg/l = (Blank- Sample) * Normality *35450/ Volume of sample taken

h) Electrical resistivity test

The purpose of electrical resistivity survey is to determine the subsurface resistivity distribution by making measurements on the ground surface. From these measurements the true resistivity of the subsurface can be estimated against corrosion. The ground resistivity is related to various geological parameters, such as, the mineral and fluid Content, porosity and degree of water saturation in rock. Electrical resistivity surveys have been used for many decades in hydrogeological, mining and geotechnical investigations. More recently, it has been used for environmental surveys. It has the following other purposes:

a) To rapidly explore the subsurface conditions in order to locate ground water, thickness of overburden, depth to different rock types and stratigraphic features.
b) To delineate weak formations, faults and dykes, if any, and to identify location of steeply dipping contacts between different rock types and earth material.
c) To delineate zones of seepage and identify its source around various structures of river valley projects.
d) Assessment of groundwater potential, quality and determination of aquifer characteristics.

e) To correlate data from resistivity survey with those obtained from borehole and trial pit logs.

For earthling of electrical conductors.

Range of Soil Resistivity (ohm-metres)	(Class of Soil)
Less than 25	Severely corrosive
25-50	Moderately corrosive
50-100	Mildly corrosive
Above 100	Very mildly corrosive

7.0 STRENGTH CHARACTERISTICS OF SOIL

The strength of a material is defined as the greatest stress it can sustain. If the stress exceeds strength, failure occurs. Strength analysis can be performed for tensile, compressive and shear stresses. Since soil mass has very little or negligible tensile strength, hence tensile strength analysis is rarely performed. Normally the geometry of most geotechnical problems is such that the soil mass is in compression, but do not fail in compression. Although the introduction of large compressive stresses may result in soil failure, the soil is actually failing in shear, not in compression. Therefore, nearly all geotechnical strength analysis is performed for shear stresses. The shear strength of a soil in any direction is the maximum shear stress that can be applied to the soil in that direction. It can also be defined as the resistance to deformation by continuous shear displacement of soil particles.

The shear strength of soil is basically made up of the following components:

(i) Frictional component:

It is mainly due to interlocking of soil particles and the friction between them.

(ii) Cohesion component:

It is due to mutual attraction that exists between the fine particles of some soils. The shear strength of cohesive soil results both from friction as well as cohesion whereas for cohesion-less soil it results from friction alone.

The shear strength equation was first proposed by French engineer Coulomb. He expressed the shear strength's' as a linear function of total normal stress 'σ' on the potential surface of sliding

$s = c + \sigma \tan(\phi)$

Where s = shear strength

To assess the strength characteristics of soil at the proposed site 3 nos. of bore hole were drilled up to the depth mentioned in the bore log data. This Bore hole was advanced by Shell and Auger method up to the depth specified below the ground surface. While advancing the bore holes SPT tests were conducted at regular intervals of 1.5m depth and representative samples were collected and analyzed for soil classification. Water table was not encountered in the bore hole up to the depth of exploration as given in bore log data. The SPT values obtained have been corrected for overburden pressure. These corrected values have been plotted against depth and are shown in the respective bore log. It has been seen from the plots that the SPT values varying from 10 to 44 has been achieved for various bore holes and at various depth as shown in bore log plot between SPT value and depth. Direct Shear Tests were conducted on undisturbed soil samples collected at regular intervals of 1.5m for evaluating the shear parameters. The results are shown in the bore log.

8.0 DESIGN CRITERIA

Any foundation (shallow footing) is to be safe against possible failure against

a) Excessive shear Failure (the bearing pressure should be within the permissible limits)
b) Excessive settlement

The settlement depends not only on the type of soil below the foundation but also on the type of foundation, material used for construction and functionality of the structure.

9.0 DESIGN METHODOLOGY FOR SOIL

9.1 Isolated/Raft foundation

Since the structure to be constructed on this site is RCC framed structure Isolated/Raft foundation has been analyzed, at a depth of 2.5m and 3.m below EGL as required by the client on limited soil sample. An allowable settlement of 75mm for raft foundation and 50mm settlement for isolated footing has been considered as per IS: 1904 – 1986. The evaluation of SBC of foundation has been done using following two criteria

Shear Failure Criteria

The safe bearing pressure from interpolation of General & Local Shear failure criteria can be obtained, using the Equation given below

Q_{ab} =0.67C NcSc dc ic + q (Nq-1) sq dq iq + 0.5 B γ Nr Sr dr ir Rw1

Where

C = cohesion in KN/m^2

B = Width of the footing in m

dq, dγ, dc = Depth factors

Sq, Sγ, Sc = Shape factors

Iq, Iγ, Ic = Inclination factors

N'q, N'γ, N'c = Bearing capacity factor

q = Total surcharge at the base level of foundation

W' = Water table correction factor (Considered for flooding and heavy rain)

γ = Bulk unit wt. of foundation soil, in KN/m^3

a) Settlements:

i) Soil profile is given for each bore hole. The Soil profile which is likely to cause greater settlements is to be considered for calculations.

ii) The imposed load at the foundation level is likely to compress the soil up to the depth of approximately equal to 1.5B below the foundations.

iii) The settlements can be calculated using IS-8009 part-I & II.

SAMPLE CALCULATION FOR ISOLATED FOUNDATION
2.5M DEPTH FOR SHEAR CRITERIA

SAFE BEARING CAPACITY		
Symbol	**Description**	**Value**
C	Cohesion	**0.0 KN/m2**
ϕ	Angle of shearing resistance of soil in degrees	**28**
ϕ_m	Angle of shearing resistance of soil in degrees [$\tan^{-1}(0.67(\tan\phi))$]	19.61
G	Specific Gravity	2.65
γ_d	Dry Density of Soil	15.90
e	Void ratio [$(G\gamma_w/\gamma_d)-1$]	0.67
Interpolation of Bearing Capacity Factor		
N'c	Bearing Capacity Factor (Local Shear)	**19.27**
N'q	Bearing Capacity Factor (Local Shear)	**9.85**
N'r	Bearing Capacity Factor (Local Shear)	**10.22**
	Shape of Base	Square
Sc	Shape Factor (Square)	1.30
Sq	Shape Factor (Square)	1.20
Sr	Shape Factor (Square)	0.80
D	Depth of Foundation	2.5
B	Width of Foundation	2
Nϕ	$\tan^2(\pi/4 + \phi/2)$	0.035
dc	Depth Factors (1 + 0.2 Dt/B$\sqrt{}$Nϕ)	1.05
ic	Inclination Factors	1
iq	Inclination Factors	1
ir	Inclination Factors	1
γ	Density at Foundation Level	17.50 KN/m3
q	Total surcharge at the base level of foundation (γ X D)	43.75 KN/m3
dq = dr	Depth Factors (1 for $\phi < 10^\circ$)	-
dq = dr	Depth Factors (1+0.1 Dt/B$\sqrt{}$Nϕ for $\phi < 10^\circ$)	1.023
Rw_1	Reduction Factor	0.5
Qu	Ultimat bearing capacity of Foundation	Qu = 0.5 C Nc Sc dc ic + q (Nq-1) sq dq iq + 0.5 B γ Nr Sr dr ir Rw1
Qu	**Ultimat bearing capacity of Foundation**	**549 KN/m2**
FS	Factor of Safety	2.5
qs	**Qu/FS**	**219 KN/m2**
	Allowable Bearing Capacity of Foundation	**21.94 t/m2**

SAMPLE CALCULATION FOR RAFT FOUNDATION
2.5M DEPTH FOR SHEAR CRITERIA

SAFE BEARING CAPACITY		
Symbol	**Description**	**Value**
C	Cohesion	**0.0 KN/m2**
ϕ	Angle of shearing resistance of soil in degrees	**28**
ϕ_m	Angle of shearing resistance of soil in degrees [$\tan^{-1}(0.67(\tan\phi))$]	19.61
G	Specific Gravity	2.65
γ_d	Dry Density of Soil	15.90
e	Void ratio [$(G\gamma_w/\gamma_d)-1$]	0.67
Interpolation of Bearing Capacity Factor		
N'c	Bearing Capacity Factor (Local Shear)	**19.27**
N'q	Bearing Capacity Factor (Local Shear)	**9.85**
N'r	Bearing Capacity Factor (Local Shear)	**10.22**
	Shape of Base	Rectangle
Sc	Shape Factor (Square)	1.10
Sq	Shape Factor (Square)	1.10
Sr	Shape Factor (Square)	0.80
D	Depth of Foundation level (m)	2.5
B	Width of Raft Foundation (m)	10
Nϕ	$\tan^2(\pi/4 + \phi/2)$	0.035
dc	Depth Factors $(1 + 0.2\ Dt/B\sqrt{N\phi})$	1.01
ic	Inclination Factors	1
iq	Inclination Factors	1
ir	Inclination Factors	1
γ	Density at Foundation Level	17.50 KN/m3
q	Total surcharge at the base level of foundation (γ X D)	43.75 KN/m3
dq = dr	Depth Factors (1 for $\phi < 10^\circ$)	-
dq = dr	Depth Factors ($1+0.1\ Dt/B\sqrt{N\phi}$ for $\phi < 10^\circ$)	1.005
Rw_1	Reduction Factor	0.5
Qu	Ultimat bearing capacity of Foundation	Qu = 0.5 C Nc Sc dc ic + q (Nq-1) sq dq iq + 0.5 B γ Nr Sr dr ir Rw1
Qu	**Ultimat bearing capacity of Foundation**	**787 KN/m2**
FS	Factor of Safety	3
qs	**Qu/FS**	**262 KN/m2**
	Allowable Bearing Capacity of Foundation	**26.24 t/m2**
	Gross Bearing Capacity of Foundation = Net + (Y×Depth of Footing)	**30.61 t/m2**

SAMPLE CALCULATION FOR ISOLATED FOUNDATION 2.5M DEPTH FOR SETTLEMENTS CRITERIA

SETTLEMENT CONSIDERATION AS PER IS: 8009 Part I (Fig. 9) (AT THE DEPTH OF 2.5M FROM E.G.L.)		
N_R	N Value Recorded at a depth of 2.5m	12.0
N_C	N Value Corrected at a depth of 2.5m	12.0
B	Width of Footing	2.0 m
	Permissible Settlement As Per IS: 8009 Part I(Fig. 9)	50 mm
	Settlement by applying 1kg/sqcm pressure as per IS:8009-I - 1976	26.4 mm
	Corrected settlement by applying W' (RW) for 1 kg/cm^2	26.4 mm
	Pressure allowed for 50mm settlement (50/corr. Settlement)	1.894
	Bearing Capacity of Foundation	**18.94 t/m2**
	Allowable Bearing Capacity of Foundation	**18.94 t/m2**

SAMPLE CALCULATION FOR RAFT FOUNDATION 2.5M DEPTH FOR SETTLEMENTS CRITERIA

SETTLEMENT CONSIDERATION AS PER IS: 8009 Part I (Fig. 9) (AT THE DEPTH OF 2.5M FROM E.G.L.)		
N_R	N Value Recorded at a depth of 2.5m	12.0
N_C	N Value Corrected at a depth of 2.5m	12.0
B	Width of Footing	10.0 m
	Permissible Settlement As Per IS: 8009 Part I(Fig. 9)	75 mm
	Settlement by applying 1kg/sqcm pressure as per IS:8009-I - 1976	33.0 mm
	Corrected settlement by applying W' (RW) for 1 kg/cm^2	33.0 mm
	Pressure allowed for 75mm settlement (75/corr. Settlement)	2.273
	Bearing Capacity of Foundation	**22.73 t/m2**
	Gross Bearing Capacity of Foundation = Net + (Y×Depth of Footing)	**27.10 t/m2**

10.0 DISCUSSION ON SOIL PROFILE

Results of field and laboratory tests indicate that the soil strata in all bore holes filled up soil up to a maximum depth of 1.0m. Below 1.0m soil strata is Silty Sand up to the depth of exploration (15m). Bore log data of various bore holes are shown in Fig. A.

11.0 CHEMICAL ANALYSIS OF WATER (BIS CODE IS: 456-2000)

Sr. No.	Test Parameters	Units of Measurements	Results	Requirement as per IS: 456-2000 (Cl. 5.4)	Method Reference
1.	Requirement of 0.02 N-NaOH to Neutralize 100ml. of water sample using Phenolphthalein indicator	ml.	0.9	5 max.	IS: 3025(P-22)-2024
2.	Requirement of 0.02 N-H_2SO_4 to neutralize 100ml of water sample using mixed indicator	ml.	15.4	25 max.	IS: 3025(P-23)-2023
3.	Solids				
I)	Organic Solid	mg/l	58	200 max.	IS: 3025(P-18)-2022
ii)	Inorganic Solid	mg/l	142	3000 max.	IS: 3025(P-16)-2023
iii)	Sulphate as SO_3	mg/l	60.40	400 max.	IS: 3025(P-24)-1986
iv)	Chloride as Cl	mg/l	55.98	500 Max. for RCC & 2000 Max. for concrete without embedded steel.	IS: 3025(P-32)-1988
v)	Suspended matter	mg/l	15	2000 max.	IS: 3025(P-17)-2022
4.	pH at 25^0C	--	7.12	Not less than 6.0	IS: 3025(P-11)-2022

Remarks: The Sample Conforms to IS: 456-2000 (Clause 5.4) for Construction Water w.r.t. to the above tests only.

12.0 RESULTS OF ELECTRICAL RESISTIVITY TEST (IS CODE: 3043 – 1987)

EARTH RESISTIVITY TEST	
PROJECT:-	**GEOTECHNICAL SOIL INVESTIGATION OF ESTABLISHMENT OF 66/11 KV GRID AT MOLARBAND, DIV. SVR**
LOCATION:-	**NEW DELHI**
DATE OF TESTING:-	**04.09.2025**

RESULTS

LOCATION	DIRECTION	NORTH (1)		SOUTH (2)		EAST (3)		WEST (4)	
	PROBE DISTANCE "S" (M)	MEGGER READING "R" (Ω)	RESISTIVITY (Ω-M) ρ = 2x3.14xS R	MEGGER READING "R" (Ω)	RESISTIVITY (Ω-M) ρ = 2x3.14xS R	MEGGER READING "R" (Ω)	RESISTIVITY (Ω-M) ρ = 2x3.14xS R	MEGGER READING "R" (Ω)	RESISTIVITY (Ω-M) ρ = 2x3.14xS R
BH-01	0.5	5.185	16.281	5.752	18.061	5.651	17.744	5.529	17.362
	1	5.258	33.020	5.821	36.556	5.921	37.184	5.667	35.587
	2	6.115	76.804	6.250	78.500	7.113	89.339	6.493	81.548
	3	6.250	117.750	6.450	121.518	7.569	142.600	6.756	127.289
BH-02	0.5	5.189	16.293	5.841	18.341	6.112	19.192	5.714	17.942
	1	5.268	33.083	5.746	36.085	6.121	38.440	5.712	35.869
	2	6.250	78.500	6.451	81.025	6.821	85.672	6.507	81.732
	3	6.311	118.899	6.879	129.600	7.145	134.612	6.778	127.704
BH-03	0.5	5.201	16.331	5.891	18.498	6.210	19.499	5.767	18.109
	1	5.350	33.598	6.111	38.377	6.366	39.978	5.942	37.318
	2	5.450	68.452	7.010	88.046	7.325	92.002	6.595	82.833
	3	6.351	119.653	7.125	134.235	7.820	147.329	7.099	133.739

DIRECTION	AVERAGE RESISTIVITY (Ω-M)
0.00	**60.72**
0.00	**66.57**
0.00	**71.97**
0.00	**66.42**
Average Resistivity =	**66.42**

Ohm-m

Sample Calculation =	**2π X S R**	
=	**2*3.14*0.5*5.185**	
=	**16.28**	**RESISTIVITY**

13.0 BEARING CAPACITY

13.1 FROM SHEAR CRITERIA

ISOLATED FOUNDATION

Depth of Foundation (m)	Founding Level of Foundation (m)	Size of footing (m)	Net Allowable Bearing Capacity (T/Sq.M)
2.5	Isolated	2.0X2.0	21.94
		2.5X2.5	22.57
3.0	Isolated	2.0X2.0	25.86
		2.5X2.5	26.45
2.5	RAFT	10>	30.61
3.0	RAFT	10>	34.37

13.2 FROM SETTLEMENT CRITERIA

ISOLATED/RAFT FOUNDATION

Depth of Foundation (m)	Founding Level of Foundation (m)	Size of footing (m)	Net Allowable Bearing Capacity (T/Sq.M)
2.5	Isolated	2.0X2.0	18.94
		2.5X2.5	17.24
3.0	Isolated	2.0X2.0	24.04
		2.5X2.5	21.74
2.5	RAFT	10>	27.10
3.0	RAFT	10>	33.03

14.0 RECOMMENDATIONS

ISOLATED/RAFT FOUNDATION

Depth of Foundation (m)	Founding Level of Foundation (m)	Size of footing (m)	Net Allowable Bearing Capacity (T/Sq.M)
2.5	Isolated	2.0X2.0	18.9
		2.5X2.5	17.2
3.0	Isolated	2.0X2.0	24.0
		2.5X2.5	21.7
2.5	RAFT	10>	27.0
3.0	RAFT	10>	33.0

1. Modulus of Subgrade Reaction: The Modulus of soil Subgrade reaction shall be taken as 8817 kN/m^3 at a depth of 2.5m and 11647 kN/m^3 at a depth of 3.0m for design of raft foundation.

NOTE:-

1. If any loose pockets are observed during excavation for foundation, the same shall be filled with PCC 1:5:10. Foundation can subsequently be placed over this prepared surface.
2. If the profile of soil at any location defers from what is shown, the same shall be brought in notice of soil consultant before laying any foundation.

15.0 CLOSURE

We appreciate the opportunity to perform this investigation for you and have pleasure in submitting this report. Please contact us when we can be of further service to you.

For Swati Structure Solutions Pvt. Ltd



Er. Shubham Ojha

SWATI STRUCTURE SOLUTIONS PVT. LTD.

S.P.T. PLOT

Observed

Corrected

PROJECT: GEOTECHNICAL SOIL INVESTIGATION OF SARITA VIHAR.

SHEET NO 19

BOREHOLE NO	**TERMINAL DEPTH (m)**	**Water Table**
BH 1	15.0 meter	NIL

N Values	N Values Corrected	DEPTH (m)	Type of Sample	Soil Classification	GRAIN SIZE ANALYSIS				LIQUID LIMIT	PLASTIC LIMIT	DRY DENSITY	BULK DENSITY	MOIST. CONT.	SHEAR PARAMETER			Sp. Gr.
					GRAVEL	SAND	SILT	CLAY						TEST TYPE	C	f	
					%	%	%	%	%	%	gm/cc	gm/cc	%		Kg/cm^2	deg.	
		0.50	DS-1	RCC													
11	11	1.95	SPT-1	Silty Sand	0.0	66.2	31.1	2.6	20	NP							
		2.80	UDS-1								1.60	1.75	10	UU	0.00	28	2.65
16	16	3.45	SPT-2		2.6	74.8	20.0	2.6	20	NP							
16	16	4.95	SPT-3		6.2	63.1	26.2	4.6	22	NP							
		5.80	UDS-2								1.68	1.76	5	UU	0.00	28	2.65
18	17	6.45	SPT-4		6.1	73.5	16.3	4.1	21	NP							
20	18	7.95	SPT-5		19.1	68.7	12.2	0.0	22	NP							
		8.80	UDS-3								1.60	1.78	11	UU	0.00	28	2.66
22	19	9.45	SPT-6		3.0	75.8	18.8	2.4	22	NP							
25	20	10.95	SPT-7		15.3	74.5	10.2	0.0	21	NP							
		11.80	UDS-4								1.60	1.78	11	UU	0.00	28	2.66
32	24	12.45	SPT-8		8.4	69.5	22.1	0.0	22	NP							
35	25	13.95	SPT-9		1.3	84.2	14.5	0.0	20	NP							
44	30	15.45	SPT-10		6.8	81.1	12.2	0.0	22	NP							

SWATI STRUCTURE SOLUTIONS PVT. LTD.

S.P.T. PLOT

Observed

Corrected

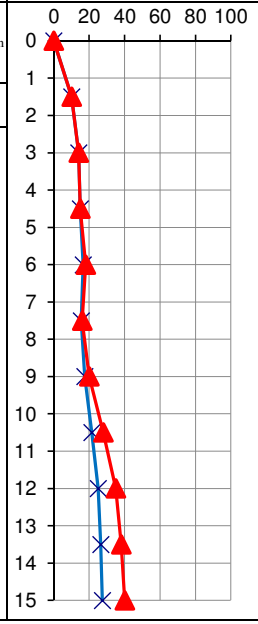

PROJECT: GEOTECHNICAL SOIL INVESTIGATION OF SARITA VIHAR.

SHEET NO 20

BOREHOLE NO	**TERMINAL DEPTH (m)**	**Water Table**
BH 2	15.0 meter	NIL

N Values	N Values Corrected	DEPTH (m)	Type of Sample	Soil Classification	GRAIN SIZE ANALYSIS				LIQUID LIMIT	PLASTIC LIMIT	DRY DENSITY	BULK DENSITY	MOIST. CONT.	SHEAR PARAMETER			Sp. Gr.
					GRAVEL	SAND	SILT	CLAY						TEST TYPE	C	f	
					%	%	%	%	%	%	gm/cc	gm/cc	%		Kg/cm^2	deg.	
		0.50	DS-1	Filled Up Soil													
10	10	1.95	SPT-1	Silty Sand	1.0	74.9	19.0	5.1	19	NP							
		2.80	UDS-1								1.58	1.75	11	UU	0.00	28	2.65
14	14	3.45	SPT-2		5.6	59.5	28.2	6.7	20	NP							
15	15	4.95	SPT-3		2.8	78.0	16.5	2.8	21	NP							
		5.80	UDS-2								1.56	1.75	12	UU	0.00	28	2.65
18	17	6.45	SPT-4		4.9	77.3	14.1	3.7	21	NP							
16	16	7.95	SPT-5		2.4	94.0	3.0	0.6	22	NP							
		8.80	UDS-3								1.58	1.77	12	UU	0.00	28	2.67
20	18	9.45	SPT-6		9.9	77.7	9.9	2.5	22	NP							
28	22	10.95	SPT-7		19.6	71.0	9.3	0.0	20	NP							
		11.80	UDS-4								1.56	1.78	14	UU	0.00	28	2.65
35	25	12.45	SPT-8		7.8	71.6	20.6	0.0	22	NP							
38	27	13.95	SPT-9		1.5	79.5	18.9	0.0	21	NP							
40	28	15.45	SPT-10		9.2	78.9	11.8	0.0	22	NP							

SWATI STRUCTURE SOLUTIONS PVT. LTD.

S.P.T. PLOT

Observed

Corrected

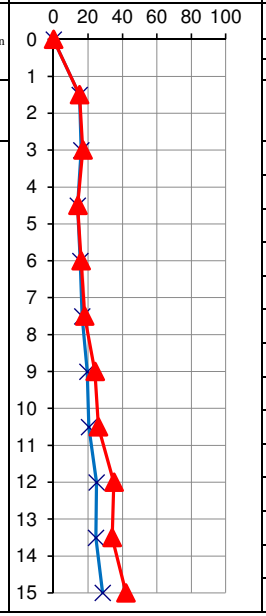

PROJECT: GEOTECHNICAL SOIL INVESTIGATION OF SARITA VIHAR.

SHEET NO 21

BOREHOLE NO	**TERMINAL DEPTH (m)**	**Water Table**
BH 3	15.0 meter	NIL

N Values	N Values Corrected	DEPTH (m)	Type of Sample	Soil Classification	GRAIN SIZE ANALYSIS				LIQUID LIMIT	PLASTIC LIMIT	DRY DENSITY	BULK DENSITY	MOIST. CONT.	SHEAR PARAMETER			Sp. Gr.
					GRAVEL	SAND	SILT	CLAY						TEST TYPE	C	f	
					%	%	%	%	%	%	gm/cc	gm/cc	%		Kg/cm^2	deg.	
		0.50	DS-1	Filled Up Soil													
15	15	1.95	SPT-1		0.0	53.8	41.3	4.9	20	NP							
		2.80	UDS-1								1.55	1.75	13	UU	0.00	28	2.65
17	16	3.45	SPT-2		0.0	80.5	19.5	0.0	21	NP							
14	14	4.95	SPT-3		3.5	76.6	19.9	0.0	22	NP							
		5.80	UDS-2								1.65	1.77	7	UU	0.00	28	2.66
16	16	6.45	SPT-4		0.0	71.6	25.5	2.8	21	NP							
18	17	7.95	SPT-5		4.4	69.6	23.7	2.2	22	NP							
		8.80	UDS-3	Silty Sand							1.51	1.77	17	UU	0.00	28	2.65
24	20	9.45	SPT-6		17.5	70.0	12.5	0.0	22	NP							
26	21	10.95	SPT-7		10.3	79.4	10.3	0.0	20	NP							
		11.80	UDS-4								1.53	1.78	16	UU	0.00	28	2.67
35	25	12.45	SPT-8		6.5	73.4	20.2	0.0	20	NP							
34	25	13.95	SPT-9		1.3	84.0	14.7	0.0	20	NP							
42	29	15.45	SPT-10		7.1	77.1	15.7	0.0	21	NP							

SWATI STRUCTURE SOLUTIONS PVT. LTD. SHEET NO. 22

GRAIN SIZE ANALYSIS

BORE HOLE NO. BH - 1

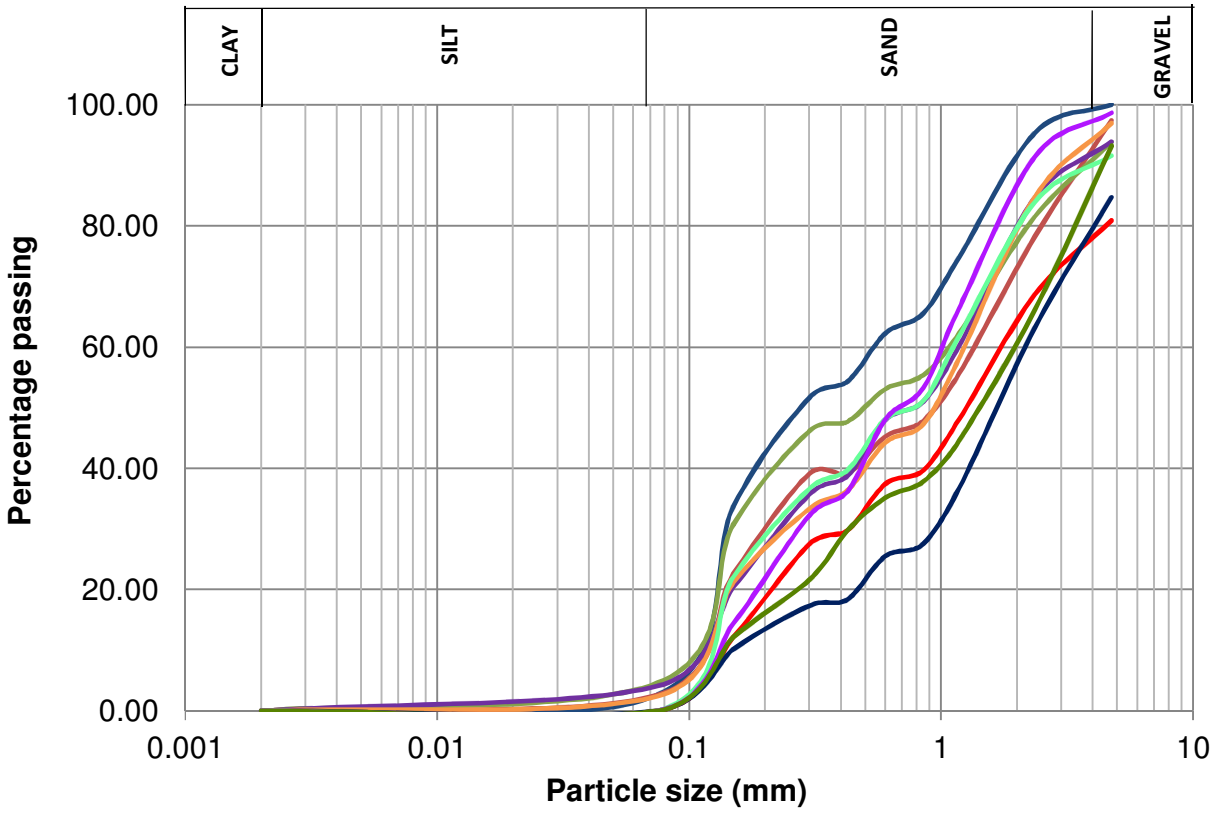

Symbol	Description	Depth (m)	Gravel (%)	Sand (%)	Silt (%)	Clay (%)
	Silty Sand	1.50	0.0	66.2	31.1	2.6
	Silty Sand	3.00	2.6	74.8	20.0	2.6
	Silty Sand	4.50	6.2	63.1	26.2	4.6
	Silty Sand	6.00	6.1	73.5	16.3	4.1
	Silty Sand	7.50	19.1	68.7	12.2	0.0
	Silty Sand	9.00	3.0	75.8	18.8	2.4
	Silty Sand	10.50	15.3	74.5	10.2	0.0
	Silty Sand	12.00	8.4	69.5	22.1	0.0
	Silty Sand	13.50	1.3	84.2	14.5	0.0
	Silty Sand	15.00	6.8	81.1	12.2	0.0

SWATI STRUCTURE SOLUTIONS PVT. LTD. SHEET NO. 23

GRAIN SIZE ANALYSIS

BORE HOLE NO. BH - 2

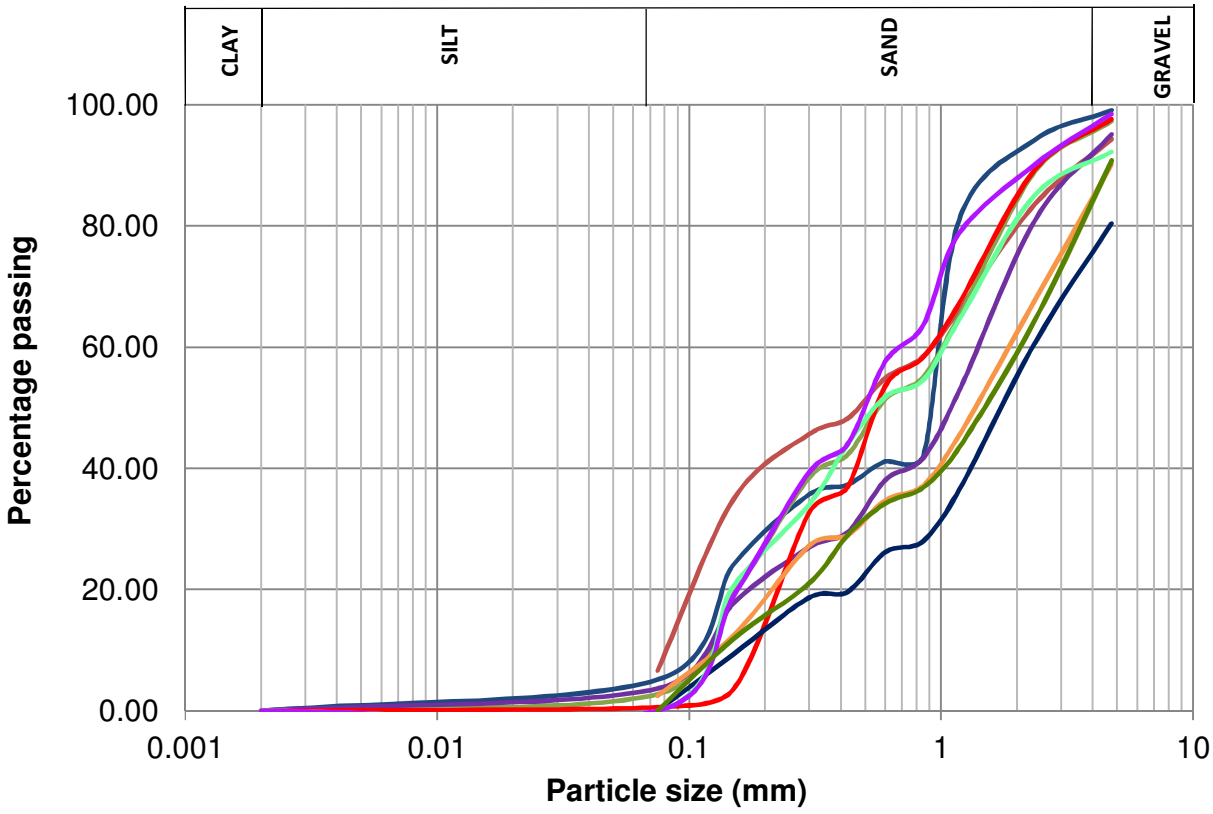

Symbol	Description	Depth (m)	Gravel (%)	Sand (%)	Silt (%)	Clay (%)
	Silty Sand	1.50	1.0	74.9	19.0	5.1
	Silty Sand	3.00	5.6	59.5	28.2	6.7
	Silty Sand	4.50	2.8	78.0	16.5	2.8
	Silty Sand	6.00	4.9	77.3	14.1	3.7
	Silty Sand	7.50	2.4	94.0	3.0	0.6
	Silty Sand	9.00	9.9	77.7	9.9	2.5
	Silty Sand	10.50	19.6	71.0	9.3	0.0
	Silty Sand	12.00	7.8	71.6	20.6	0.0
	Silty Sand	13.50	1.5	79.5	18.9	0.0
	Silty Sand	15.00	9.2	78.9	11.8	0.0

SWATI STRUCTURE SOLUTIONS PVT. LTD. **SHEET NO. 24**

GRAIN SIZE ANALYSIS

BORE HOLE NO. BH - 3

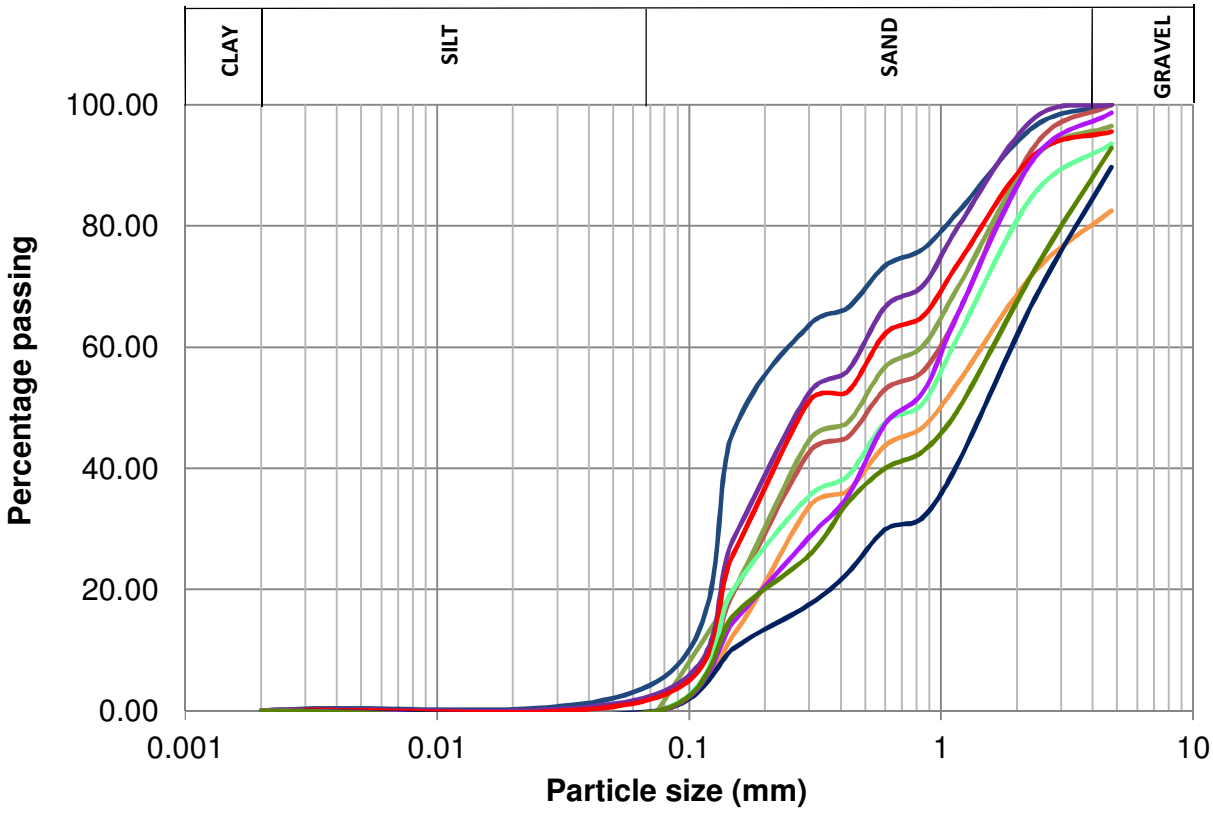

Symbol	Description	Depth (m)	Gravel (%)	Sand (%)	Silt (%)	Clay (%)
	Silty Sand	1.50	0.0	53.8	41.3	4.9
	Silty Sand	3.00	0.0	80.5	19.5	0.0
	Silty Sand	4.50	3.5	76.6	19.9	0.0
	Silty Sand	6.00	0.0	71.6	25.5	2.8
	Silty Sand	7.50	4.4	69.6	23.7	2.2
	Silty Sand	9.00	17.5	70.0	12.5	0.0
	Silty Sand	10.50	10.3	79.4	10.3	0.0
	Silty Sand	12.00	6.5	73.4	20.2	0.0
	Silty Sand	13.50	1.3	84.0	14.7	0.0
	Silty Sand	15.00	7.1	77.1	15.7	0.0

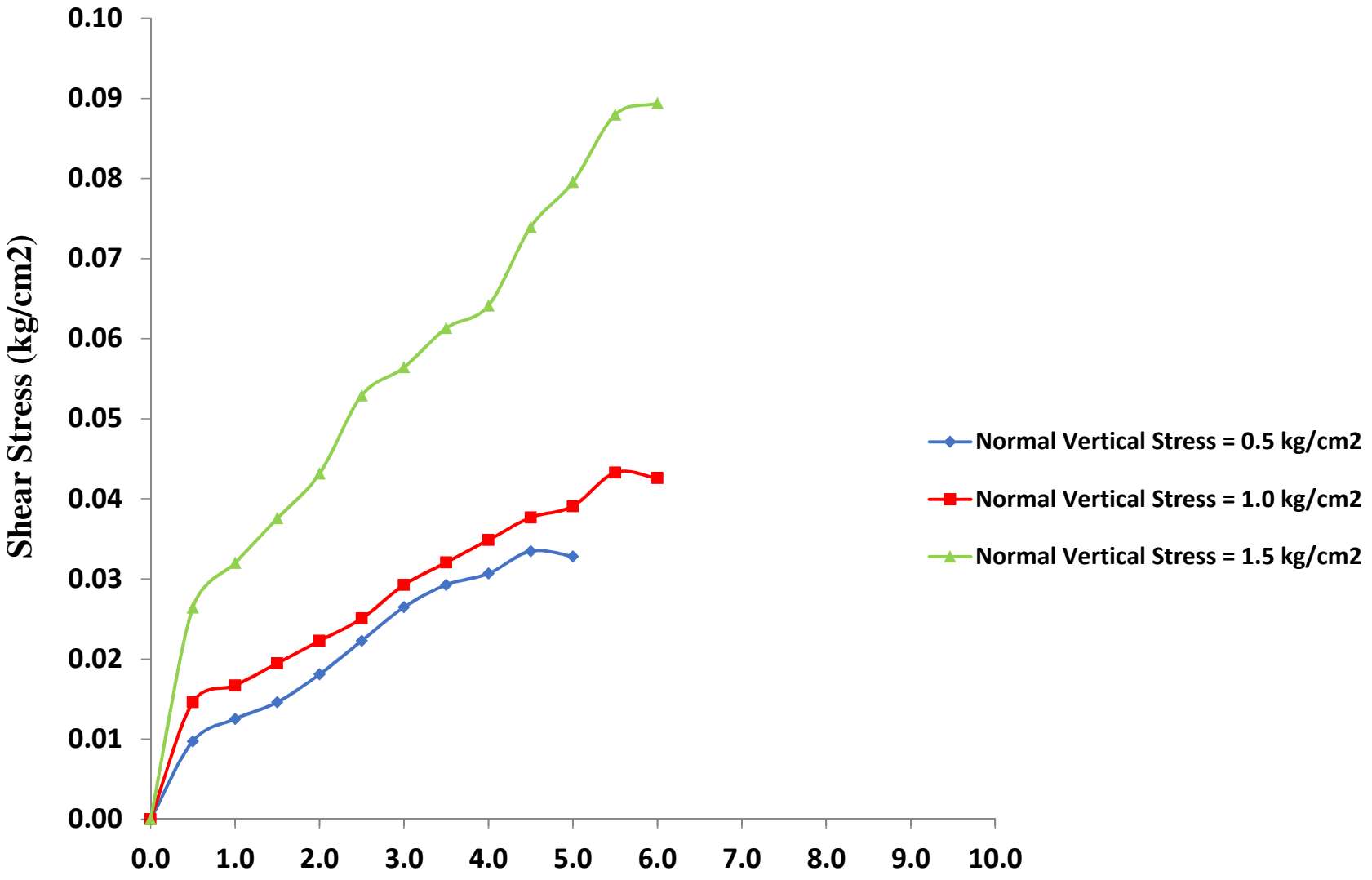

SHEAR STRESS-STRAIN CURVE

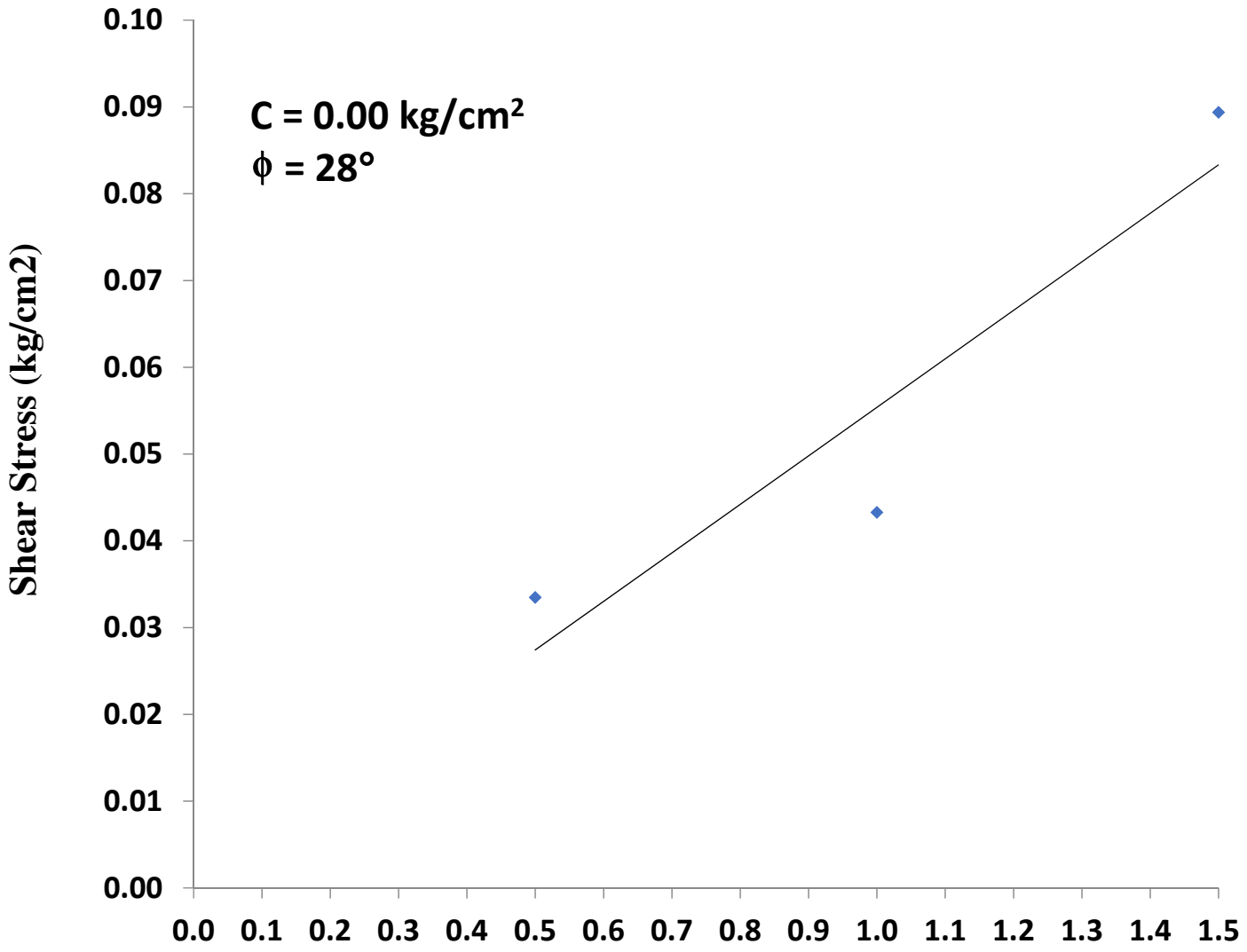

FAILURE ENVELOP

Fig. A

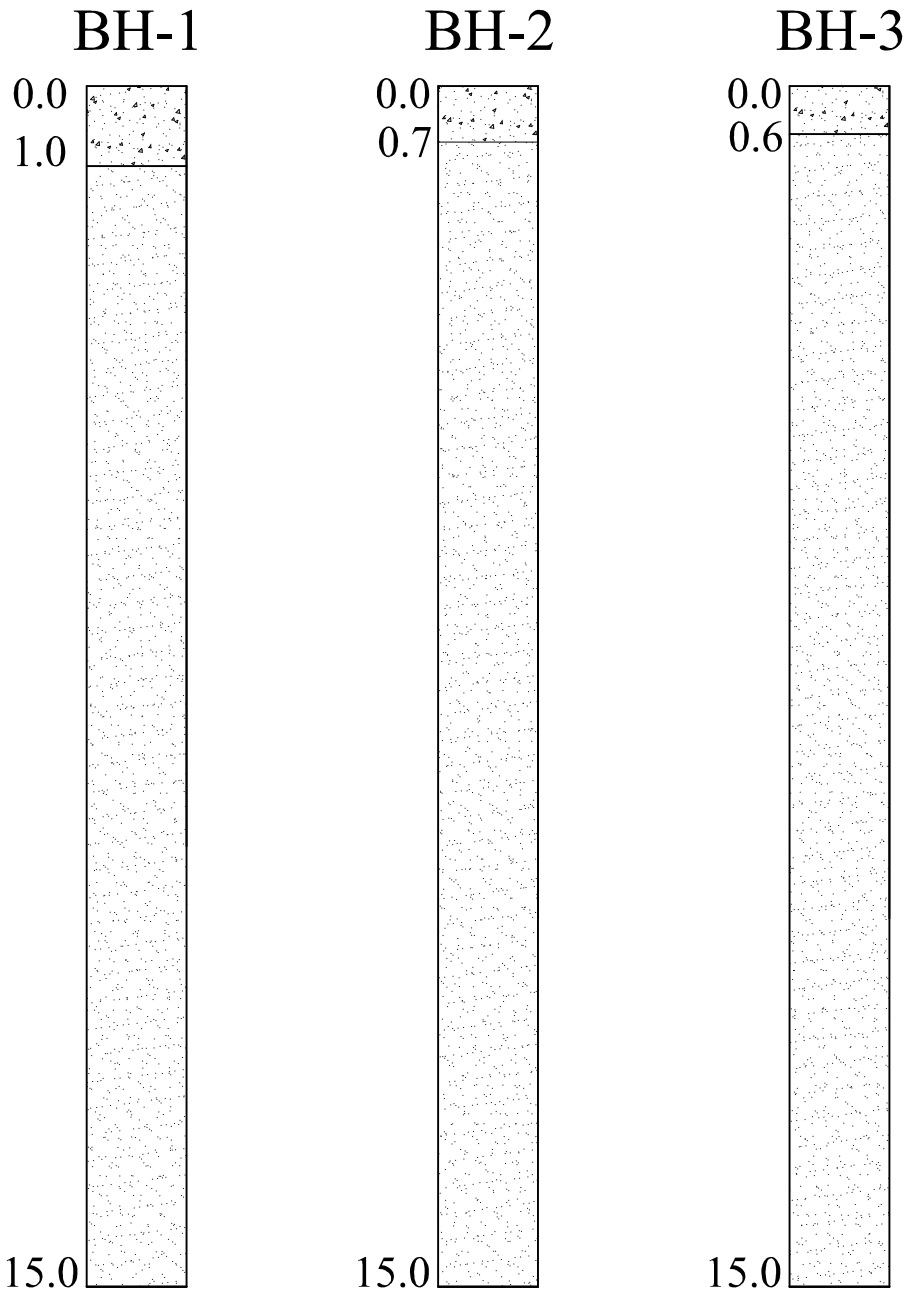

LEGEND	
FILLED UP SOIL	
Silty Sand	

SITE IMAGE









APPENDIX – 'A'

LIST OF REFERRED IS CODES

1. IS 12070:1987 Code of Practice for Design and construction of Shallow Foundations on rocks
2. IS 11315 (Part11) 1985 Method for the quantitative description of discontinuities in rock masses Core recovery and rock quality
3. IS 13365 (Part 1) : 1998 Quantitative Classification Systems of Rock Mass — Guidelines Part 1 Rock Mass Rating (RMR) For Predicting Engineering Properties
4. IS 3043: 1987 Code of Practice for Earthing - Electrical Resistivity Test.
5. IS 1892: 2021 Practice For Subsurface Investigation For Foundations.
6. IS: 1948-1970 Classification and identification of soils for general Engineering purposes (first revision) Amendment 2
7. IS: 1892-1979 Code of practice for sub surface investigations for Foundations
8. IS: 2131-1981 Method of standard penetration tests for soils
9. IS: 2132-1986 Code of practice for thin walled tube sampling of soils
10. IS: 2720-1983 (Part 1) Methods of tests for soils: Preparation of dry soil samples for various tests (second revision)
11. IS: 2720-1980 (Part-2) Methods of test for soils: Determination of water content (second revision) Amendment 1
12. IS: 2720-1980 (Part-3/Sec 1) Method of test for soil: Determination of specific gravity : Fine grained soils
13. IS: 2720-1980 (Part-3/Sec 2) Method of test for soil: Determination of specific gravity : Fine , medium & coarse grained soils.(First revision)
14. IS : 2720-1985 (Part-4) Methods of test for soils: Grain size analysis (Second revision)
15. IS: 2720-1985 (Part-5) Methods of test for soils: Determination of liquid and plastic limit (Second revision)
16. IS: 2720 (Part-8) Determination of water content – dry density relation using heavy compaction. (First revision)
17. IS :1904-1986Code of Practice for design and construction of foundation in soils: First Revision (Amendment 1)
18. IS :6403-1981 Code of Practice for determination of bearing capacity of shallow foundation: First revision (Amendment 1)

BSES Rajdhani Power Limited
BSES Bhawan, Nehru Place, New Delhi- 19

TECHNICAL SPECIFICATION

FOR

ERECTION, TESTING & COMMISIONING OF 66/11kV MOLARBAND GIS GRID SUBSTATION AT NEW DELHI ON TURNKEY BASIS

(SPEC NO. BRPL-EHV-TS- MRB)

Prepared by	**Sonia Mittal**		**Rev: 0**
Reviewed by	**Uttam Shukla**		**Date: 21.11.2025**
Approved by	**Deepti Sharma**		

Technical Specification for 66/11KV Molarband GIS Grid Substation in New Delhi

INDEX

S.No	Description	Page. No
1	General Design Criteria	3
2	Civil Work	17
3	66kV GIS	49
4	66kV CRP	88
5	Battery Charger & DCDB	88
6	Li-Ion Battery	115
7	415 V AC Distribution Board	128
8	Grounding & Lightning Protection System	145
9	LT Power Cable	156
10	Control Cable	175
11	Illumination System	186
12	11KV Indoor Switchgear	198
13	Cable Installation & Accessories	260
14	Exhaust and Ventilation	266
15	Fire Extinguisher	270
16	Fire Suppression system	273
17	Video Surveillance System	281
18	Fire Detection & Alarm System	287
19	Packing & Transportation	291
20	Materials Workmanship & Tests	294
21	Misc Activities	298
22	EOT Crane	305
23	Cable Seal Solution	311
24	Insulating Mat	317
25	Station Transformer	320
26	SCADA Interface Works & Automation	402
27	11KV Auto-Switched Capacitor Bank	429
28	Power Transformer(incl NIFPS)	441
29	Structural Work	531
30	Lightning Arrestor	538
31	High Mast	541
32	Outdoor Switchyard Material	554
33	IT Devices	566
34	Tri vector ABT meters	574
35	GIS Termination Kit	590
36	Approved Vendors	612
37	Training and Inspection	618
38	Spares Maintenance Tools and Tackles	622

SCHEDULE & ANNEXURE

Volume-2

Schedule	Description	Page No.
Annexure M	Specification for Measurement Instruments	
Annexure-O	Technical specification for New Grids 24x7 O&M support	
Schedule – A	Schedule of General Information	
Schedule – B	List of Drawings enclosed with Bid	
Schedule – C1	Technical Data Sheets of HT Indoor Switchgear	
Schedule – C2	Technical Data Sheets of CRP	
Schedule – C3	Technical Data Sheets of Battery Chargers	
Schedule – C4	Technical Data Sheets of Battery Bank	
Schedule – C6	Technical Data Sheets of 11KV Capacitor Bank	
Schedule – C7	Technical Data Sheets of LT Power Cable	
Schedule – C8	Technical Data Sheets of Control Cable	
Schedule – C9	Technical Data Sheets of Illumination System	
Schedule – C10	Technical Data Sheets of 415 V AC Distribution Board	
Schedule – C11	Technical Data Sheets of Station Transformer	
Schedule – C12	Technical Data Sheets of Grounding & Lightning Protection System	
Schedule – C13	Technical Data Sheets of Cable Accessories	
Schedule – C14	Technical Data Sheets of Cable Trays	
Schedule – C15	Technical Data Sheets of 66kV GIS	
Schedule – C16	Technical Data Sheets of Power Transformer	
Schedule – C17	Technical Data Sheets of Outdoor LA	
Schedule – D	List of Installation	
Schedule – E1 & E2	Deviation from Specification	
Schedule – F	Delivery, Terms and Conditions	
Schedule – G	Schedule of Tests	
Schedule – H	List of instruments, Testing Equipment, Tools & Tackles for Erection & Maintenance	
Schedule – I	Schedule of Recommended Spares	
Schedule – J	Declaration	
Drawings.		
1	Main Single Line Diagram	
2	Substation Layout Plan (suggestive)	

Technical Specification for 66/11KV Molarband GIS Grid Substation in New Delhi

BSES Rajdhani Power Limited

TECHNICAL SPECIFICATION

FOR

GENERAL DESIGN CRITERIA

Prepared by	**Sonia Mittal**		**Rev: 0**
Reviewed by	**Uttam Shukla**		**Date: 21st Nov, 2025**
Approved by	**Deepti Sharma**		

1.0 INTENT OF SPECIFICATION

This specification is intended to cover complete design, engineering, manufacturing, assembling, testing at manufacturer's works, supply and Transportation F.O.R. site of all equipment and accessories, steel structures, all structural work, substation building, Civil and architectural work, complete erection, testing, commissioning & putting into successful commercial operation of 66/11 KV GIS substation including supply of all Labour, supervision, tools & plants and supplies as required.

The 66kV Gas insulated Double Bus substation shall have following bays with equipments and civil works: - Four (04) no's Feeder Bay – four(04) no's Transformer bay - One (01) no Bus Coupler bay. -Two (02) sets Bus PT.

The substation shall have control room building with 11kV Indoor Switchgear, 66kV Control and Relay Panel, 66kV GIS, Battery & Battery Charger, ACDB and DCDB etc. The suggestive Layout Plan and Single Line diagram of the substation is enclosed.

This specification shall be read in conjunction with other sections of bidding document. In the event of any discrepancy with the listed document, the most stringent one shall govern. In the tender document, the term 'Contractor', 'Bidder' and 'Vendor' has been used interchangeably.

It is advisable that bidder should visit the site to confirm its present status prior to submission of their bid.

2.0 SCOPE OF SUPPLY

This scope of work shall include design, engineering, manufacture, shop floor testing, inspection, packing, dispatch, loading, unloading and storage at site, transit/storage and construction insurance, assembly, erection, civil structural, architectural work, complete pre-commissioning checks, testing & commissioning at site, obtaining statutory clearance & certification from State Electrical Inspector, Municipal Corporation department, Fire officer, Horticulture department etc. and handing over to the Owner after satisfactory commissioning of complete 66/11 kV GIS substation of BSES Rajdhani Power Ltd. at Molarband, New Delhi.

The scope includes all material, equipment and works required for the construction of the Substation complete with all items considered essential for safe and trouble-free continuous commercial operation of the system in a manner acceptable to the Owner and complying with latest revision of National and International Standards, Codes & Practices, Indian Electricity Rules, CEA (Measures relating to Safety and Electric Supply) **Regulations 2023** and Indian Electricity Act.

The scope of supply broadly includes the following:

2.1 Major Equipments:

- 11kV Auto-Switched Capacitor Bank (APFC) Outdoor Type -
  - 7.2 MVAR -2 Sets
  - 3.6 MVAR -2 Sets
- 66/11kV **31.5MVA** Power Transformer and NIFPS along with accessories- 2 Sets
- 66KV GIS Panels (as per SLD) including GIS termination Kits **- 9 Sets**
- 220V Ni-Cad Battery bank As per battery sizing calculation with **2 hours** Backup time and minimum 150AH - **2 Set**
- Battery charger with DCDB -1 Set
- ACDB -1 No.
- Station Aux. Transformer, 11/0.433kV, 400kVA -1 No
- SCADA RTU-1 Set
- High mast lights 16 M high **- 4 Nos**
- Gas filling device with filter and leakage detector for above GIS Panel (DILO Make)- 1 Set

2.2 Item as System

- 11kV VCB Switchgear Panel board with Numerical protection relays (refer SLD).
- Earthing trucks for 11KV Panels -2Nos of bus earthing truck and 2Nos of cable earthing truck for each size of panel.
- All Numerical protection Relay shall be supplied with Conformal coating
- Grounding and earthing of entire substation including all the fences such as Power Transformer Fencing, Aux. transformer fencing and capacitor bank fencing as per Technical Specification.
- 220V Ni-Cad Battery bank and one set of Battery charger compatible with Ni-Cad Battery bank.
- Outdoor illumination system including street lighting with Poles and its cables
- Indoor illumination system including emergency lighting (DC lighting incase of black out)
- Air Conditioning, Exhaust and Ventilation for complete substation building.
- Fire detection and alarm system including its SCADA integration.
- Direct stroke lightning protection by shielding spikes.
- 11kV Panel Fire Suppression System including its SCADA integration
- Video Surveillance system including its SCADA integration.
- Material GPS Tracking System for transit of all the material
- Fiber optic Cable including patch cord, LIU splicing etc. inside substation as well as remote end substation for line differential protection.
- Cable Trench Indoor and Outdoor (Control and Power Cable Trench shall be separate)
- In GIS room height till the hook of EOT crane shall not be less than twice the GIS height plus sling sag clearance. Additional height for EOT Crane Maintenance space shall be provided.
- Plinth of Power Transformer shall be considered for minimum 31.5MVA Power Transformer.
- GIS Cable cellar minimum height 3000mm with spare cable entry provision at least 4 nos circuit.
- Culvert for road crossing
- The building foundation shall be designed for Ground floor + First floor + 2nd Floor
- Fire retardant paint for all cable entering to panels till the cable opening
- 6 Months O&M from the date of handing over of Substation (refer Annexure-O for Details).
- AC and DC Failure Hooter near Security gate at any pole
- Cyber security readiness substation for entire substation

2.3 Items as Lot

- LT Power & Control cables (fire retardant type) supply and termination and Glands.
- Building Cable entry Sealing
- Supply and erection of 11KV/33KV/66KV Power cable termination kits and Glands.
- Cable trays with supporting structure.
- Supply and ETC of GIS Termination Kits
- Supply and installation of Fire extinguisher
- Direct Stroke Lightning Protection for outdoor equipments
- Maintenance tools & tackles including testing & measuring instruments
- Cabling between equipments and RTU
- Supply & Erection testing and commissioning of Line differential protection Relay at remote end
- Rubber Mat for all Indoor equipments front and back side
- Laying and Termination of all Free issue 11KV/33KV/66KV cables.
- Supply and erection of Zebra Conductor as per requirement.
- Supply and installation of Material required for IMS (Entry and Exit Sign, First aid Box etc.)
- Any other Misc. work (like nomenclature writing, SLD framing etc.)
- Free issue and return of items/excess materials from BRPL Stores to Site or Site to BRPL stores shall be in Vendors Scope of work.

2.4 Civil Works

- As per Civil specification

2.5. Design Work

Design documentation in sufficient copies including design memo, calculations, general arrangement, plans, elevations and sectional drawings, sag/tension calculations, short circuit calculations, electro-dynamic force calculations, single line diagrams, schematic interconnection drawings, wiring diagrams, foundation calculations, foundation plans/details, cable schedules, bill of materials, lighting system design calculations, earthing system design calculations, illumination system design, calculation, conductor sizing, calculation insulation coordination, protection coordination etc.

- Submission of drawings/GTP/Layout/SLD etc. in A3 size of Hard Copy (2 sets) for BRPL Approvals.
- Operation & Maintenance Manuals and As-built drawings. (Six sets hard copy & two sets soft copy)
- Documentation required by State Electrical Inspector or by other statutory body for statutory approval/certification of the Substation installation. (as required)
- Temporary sheds for storage of equipment, tools & tackles, construction offices with required fittings & furnishings.

The above equipment and services are specifically listed for the guidance of the Bidder. Apart from the above, Single Line Diagram and Layout Plan (suggestive) may also be referred for further details of equipment. However, it is to be understood that the Contractor's scope is not limited to the items specifically listed above but covers all items required for the completion of a safe and fully functional Substation.

2.6 Tools and Spares

Tools & Commissioning Spares: Contractor should be equipped with all tools, tackles and commissioning spares for successful commissioning of substation.

Recommended Spares: Contractor shall be providing the Owner a list of recommended spares along with quantity and market/budgetary prices. This shall be a recommendation only and shall not be a part of quotation for price bid

3.0 COMPLETION SCHEDULE

The contractor shall be fully responsible to complete the project in time. It is desired that the total project should complete in *300 days* from the date of LOA. The broad completion schedule is attached here under for reference. The detailed completion schedule shall be prepared by contractor in MS-Project or Primavera software and shall be submitted at the time of detail engineering for approval. The detailed schedule shall be finalized with the help of schedule given by Owner.

Activity schedule shall be as tabulated below. The reference date shall be the date of LOA.

Sl. No.	Description of Work	Time Line from Zero Date(in days)	Responsibility
1	Zero Date (Letter of Award)	0	BRPL
2	Mobilization of manpower	15	Contractor
3	Inception Report	15	Contractor
4	PERT chart approval / L2 schedule majorly including : • Manpower & Machinery to be deployed • Procurement of major equipment • Dispatch schedule of the major item • Intermediate milestone schedule	15	Contractor
5	Submission of Drawings/Documents/ calculations for Engineering Approval	30	Contractor
6	Engineering Approval	60	BRPL
7	Civil Works	130	Contractor
8	Procurement/Supplies	210	Contractor
9	Equipment Erection	240	Contractor
10	Commissioning of 66kV line	255	BRPL
11	Commissioning of 1st Power Transformer	255	Contractor
12	Commissioning of 2nd Power Transformer	270	Contractor
13	Testing & Commissioning of entire substation	285	Contractor
14	Handing Over	300	Contractor

4.0 ELECTRICITY & WATER FOR CONSTRUCTION

Electricity Supply and Water for construction purpose shall be arranged by Contractor.

5.0 SUPPLY AND WORKS BY BIDDER

The termination kits/jumpers, Glands, Cable Seal and interconnections for all the Cables/Conductors shall be in the scope of Contractor. Extension of 48 core (12 Single Mode and 36 Multimode) Fiber optic embedded in Infeed Power Cable and interconnections for all the Cables/Conductors (with all the accessories of 48 core FO including LIU, joint box, patch cord and extension of fiber optic from Power Cable to LIU), shall be in the scope of Contractor. Laying of cables and stringing of Conductors including its hardware fitting and insulators in the substation premises shall also be in the scope of Contractor only. Cable mounting structure for Power transformer Incoming shall be in Contractors scope.
Works for Future Transformer like Transformer Foundation, Cable trench, Earthing, Cable Seal, Cable Trays shall be in Contractors scope. Also Earthing and grounding, DSLP, illumination, trenches for future transformer shall be in Contractors scope.

.**WORKS BY OWNER:** The following works shall be carried out by Owners:

1. Soil Investigation and Soil resistivity test
2. Topographical survey

The trenches and cable trays for Incoming/outgoing cables inside the Substation premises shall be in the scope of Contractor.

6.0 SUPPLIES AS FREE ISSUE ITEMS:

The following items shall be supplied free of cost to vendor:

- 11 kV 1x1000 sq. mm. XLPE Cables
- 11 kV 3x300 sq. mm. XLPE Cables
- 66kV 3Cx300 sq. mm XLPE Cables (If required)
- 66 kV 1x1000 sq.mm. XLPE Cables (if required)

However, the termination kits/jumpers, Glands and interconnections for the above Cables/Conductors shall be in the scope of vendor. Laying of these free issued cables, stringing of Conductors including its hardware fitting & insulators and ETC of Power Transformers in the substation premises shall also be in the scope of vendor only.
Free issue and return of items/excess materials Transportation from BRPL Stores to Site or Site to BRPL stores or other sites shall be in Vendors Scope of work.

7.0 COORDINATION WITH STATUTORY BODIES & OUTSIDE AGENCIES

The Contractor shall be fully responsible for getting all statutory clearances, including but not limited to Electrical Inspector clearance, Civic Agencies (MCD/DDA/PWD or any other), Horticulture department, Fire officer or any other statutory bodies for implementation of the work.

The contractor shall be fully responsible for carrying out all co-ordination and liaison work as may be required with Electrical Inspector, Civic Agencies (MCD/DDA/PWD or any other), Horticulture department, Fire officer or any other statutory bodies for implementation of the work.

The application on behalf of BRPL for submission to the Electrical Inspector and other statutory bodies along with copies of drawings complete in all respects shall be done by the contractor & approval / certificates shall be obtained by the contractor well ahead of time so that the actual commissioning of equipment is not delayed for want of inspection and approval by the inspector & statutory bodies. The contractor shall arrange the actual inspection work by Electrical Inspector.

Official fees to electrical inspector / statutory bodies shall be paid by the Contractor.

8.0 COORDINATION WITH OTHER CONTRACTOR & OWNER'S SYSTEM

The contractor shall be fully responsible for carrying out all the co-ordination work required with their sub-contractors, if any, as well as with Owners system for execution and completion of work.

9.0 TERMINAL POINTS OF CONTRACTOR'S SCOPE

9.1 Up to Line take off point and including provision for Cable termination at the incomer and outgoing bays.

9.2 Outdoor Cable Trenches : Upto the boundary wall of substation

9.3 Lighting/Illumination/Lightning : Within Outdoor &Indoor Substation Area

9.4 Earthing : Within Substation area and building.

9.5 Water supply and drainage at suitable point near the substation boundary wall at location to be decided during detailed engineering.

10.0 SALIENT FEATURES, BASIC DESIGN CRITERIA AND MINIMUM TECHNICAL REQUIREMENTS OF 66/11 KV SUBSTATION/SUBSTATION EQUIPMENTS

10.1 Introduction

BRPL is setting up 66/11KV GIS Grid substation at Molarband New Delhi. The Substation shall be constructed on turnkey EPC execution. EPC contractor is responsible for detailed design also. In this paragraph only salient features, basic design criteria and Owner's minimum technical requirements are enumerated for the guidance of the Bidder. However, this should be referred in conjunction with SLD enclosed. The salient features of substation have been tabulated as under:

Particulars	Description
Voltage Level	66/11 kV
Infeed Plan	66 kV Double Circuit
Infeed arrangement	66 kV U/G Cables
Substation Capacity	**4 x 31.5 MVA**
Present status of Land	In possession of BRPL
Previous work done at site(if any)	Boundary wall

10.2 Substation Capacity

The substation capacity shall be as per the table in Clause no. 10.1 above.

10.3 11KV Switchgears

The 11KV Switchgear shall be installed inside the substation building. The switchgears shall be equipped with Vacuum Circuit Breaker. The metering and protection relays shall be part of switchgear only. Control voltage shall be 220 V DC.

10.4 66/11KV Power Transformer

The Outdoor Power transformer shall be 25/31.5MVA, ONAN/ONAF with OLTC. The microprocessor based Transformer monitoring relay shall be provided in place of RTCC panel. Each Transformer shall be provided with NIFPS. Each Transformer shall be provided with NIFPS along with its cables, one extra N2 cylinder and extra valves as per specification.

10.5 Battery Charger and Battery Bank

The Control supply shall be 220V DC. The Ni-Cd Battery bank shall be installed in separate room with proper ventilation system as per safety requirement .The battery charger shall be SMPS based installed inside control room building and shall be SCADA compatible.

10.6 11kV APFC Capacitor Bank

Two set of 7.2MVAR capacitor bank shall be installed indoor. Each capacitor bank shall have one **fixed step of 0.9 MVAR and two steps of 1.8 MVAR and last step of 2.7 MVAR**. Each sub bank shall be provided with motorized 11KV Isolator cum earth switch, 0.2% series reactors, capacitor switch/vacuum contactor, LA, HT fuses, RVT, Neutral Displacement Relay (numerical type), Under voltage Relay. Automatic power factor controller and all necessary equipment for auto switching.

Two set of 3.6MVAR capacitor bank shall be installed indoor. Each capacitor bank shall have one fixed step of 1.8 MVAR and one steps of 1.8 MVAR. Each sub bank shall be provided with motorized 11KV Isolator cum earth switch, 0.2% series reactors, capacitor switch/vacuum contactor, LA, HT fuses, RVT, Neutral Displacement Relay (numerical type), Under voltage Relay. Automatic power factor controller and all necessary equipment for auto switching.

10.7 Gas Insulated Switchgear

The GIS switch gear shall be of modular design offering high degree of flexibility. Each module shall be complete with SF6 gas circuit breaker, Isolators, fast Earthing switches, Voltage transformers, cable end enclosures, Surge Arrester., local control cubicle, Line Side Isolator shall be integral part of GIS. One set Gas filling device along with filter, Gas leakage detector shall be integral part of GIS.

10.8 Protection coordination through **ETAP Software.**

10.9 Power and Control cable -

All power and control cables within substation premise will be laid in single piece. No cable joint shall be accepted within substation premise.

10.10 Other Parameters for 66 KV Substation

Following parameters /service conditions shall prevail for entire system design under the scope of this turnkey project:

General Service Condition

S. No	Particulars	Data
1	Design Ambient temperature	50 °C
2	Seismic Condition	Zone IV as per IS 1893
3	Wind Pressure	195 kg/M² upto elevation of 30 M as per IS 875
4	Maximum Relative Humidity	100%
5	Maximum Altitude above Sea level	1000M
6	Rainfall	750mm (concentrated in 4 months)
7	Pollution level	Heavy/Dry

System Parameters

S. No.	Parameters	HV Side	LV Side
1	Nominal Voltage (kV)	66	11
2	Rated Voltage (kV)	72.5	12
3	Rated Frequency (Hz)	50 +/- 3%	50 +/- 3%
4	System Neutral Earthing	Solidly Grounded	Solidly Grounded
5	Short Circuit rating (for 3 sec)	3600 MVA / 31.5 kA	500 MVA / 26.3 kA
6	Basic Insulation Level		
6.1	Impulse frequency withstand voltage (kVp)	325	75
6.2	Power frequency withstand voltage (kV rms)	140	28

Parameters for Switchyard Equipments (66kV)

S.No	Particulars	66kV	11kV
1	Minimum Creepage	31mm/KV	31mm/KV
2	Minimum Clearances		
2.1	Phase to Phase	630 mm	280mm
2.2	Phase to Earth	630 mm	140mm
3	Safety Clearances		
3.1	Sectional Clearances	3000 mm	
3.2	Height of lowest live point on the insulator from the ground	4300 mm	
4	Bus Configuration	Double Bus	Single Bus
5	Conductor	Silver Platted/tinned electrolytic copper / ACSR Zebra(For Jumpering)	Silver Platted/tinned electrolytic copper

Site Service Conditions (considering main external road at 0.00 level)

S. No.	Particulars	Level
1	Substation Road level	+750 mm
2	Final top level of gravel in outdoor yard	+750 mm
3	Final top level of Equipment & gantry foundation	+1050 mm
4	Control Room Building Plinth Level	+1500 mm

11.0 CODES & STANDARDS

The contractor shall follow latest Indian Standards or international standard. Refer respective equipment specification for applicable standards.

12.0 ENGINEERING DELIVERABLES

The Bidder shall submit following minimum Engineering Deliverables from award of the Contract. Any other drawing / calculation which is not listed below and may be required for execution of the job shall also be submitted by the bidder.

S. No.	Drawing Title
A.	Inception report including work schedule and PERT chart within two weeks from LOA(Letter of Award)
B.	**Electrical Drawing**
1	Main Single Line Diagram indicating bus/breaker rating, cable/overhead conductor size, fault levels of different voltage grade, Transformer details, metering and protection with CT / PT cores / ratio / burden / accuracy class.
2	Complete BOQ of the substation with technical details.
3	Single Line Diagram of 415 V AC Distribution board
4	Single Line Diagram of 220V DC Distribution board
5	Overall Site Layout Plan
6	Maximum & Minimum fault level calculation for the substations
7	Insulation coordination
8	Switchgear/Control building layout – Plan
9	Cable trench layout Plan & Section – outdoor
10	Cable tray layout Plan & Section – Indoor
11	BOQ of Cable trays and accessories
12	Sizing calculation of LV Cables
13	Power cable schedules
14	Control cable schedules
15	BOQ of Cables
16	Codification of cable trays and cable tray/cable tag marking concept
17	Ground mat design Calculation from actual site soil investigation
18	Drawing of ground mat along with BOQ
19	Drawing of Indoor equipment grounding details
20	Outdoor equipment grounding arrangement and details
21	Input /Output list of SCADA system
22	Outdoor Illumination system design Calculation
23	Indoor Illumination system design Calculation
24	Drawing of Outdoor Illumination with erection details
25	Drawing of Indoor Illumination with erection details

S. No.	Drawing Title
26	Complete BOQ indoor and outdoor illumination system
27	CT/PT sizing/detail calculation of burden, knee point voltage
28	All major equipment sizing calculation
29	Cabling, earthing & lightning concept
30	Power Transformer foundation details, soak pit arrangement, firewall segregation
31	Fire fighting arrangement of Transformers and indoor equipments
32	Relay setting with calculations
33	GIS details and its calculations
34	As built documentation of the drawing / documents
35	DC Sizing Calculation
36	Exhaust and Ventilation
37	All the other required design Documents
C.	**Civil Drawings**
S. No	**Drawing Title**
1	GA & RCC detail of boundary Wall.
2	Layout Plan For Control Building
3	RCC detail of Control Room Building
4	RCC detail of Outdoor Cable Trench including trench cover
5	GA & RCC detail of Transformer foundation & Oil Soak pit
6	GA & RCC detail of Auxiliary Transformer
7	GA & RCC detail of Capacitor Bank
8	GA & RCC detail of Burnt Oil Tank
9	GA & RCC detail of Lighting poles
10	GA & RCC detail of Equipment foundation
11	Structural Detail of Equipment
12	Overall layout plan indicating landscaping.
13	Detail of Fire wall
14	GA & RCC detail of NIFPS System
15	Detail of Water Supply and Sanitary system
16	GA & RCC detail of Septic Tank
17	Detail of Rainwater Harvesting System (detail of recharge pit)
18	GA & RCC detail of Underground Water Tank
19	GA and detail of fencing with gates of Switchyard, Capacitor Bank & Auxiliary Transformer
20	GA and Section of Road & Storm Water Drain
21	RCC detail of Security Gumtee
22	Outdoor Trench layout for switch yard
23	Sectional Details for Outdoor Trenches
24	Conduit plan for Control room building.
25	Switch yard layout

13.0 SUBMISSION OF DRAWINGS & OTHER DOCUMENTS

BOQ, Calculations and other documents etc. shall be on A4 size paper. All the drawings shall be drawn to the scale as far as possible on A3 size or larger size paper and should be legible. The submission shall be

- Two (02) Sets of approved and released for construction drawings/BOQ/Calculation for Owners reference.

- Six (06) Sets of final As Built drawings, design, BOQ, Calculation. O&M manual, for all equipments supplied.
- Soft copies of all drawings/Documents/calculation in Auto CAD and Microsoft office file format as applicable.

Drawings shall be treated as submitted, only if provided with BOQ (If applicable). Transmittal sheet shall be mandatory to attach with all the drawing and documents. Format for transmittal shall be provided to successful bidder for drawing approvals etc.

14.0 TEST CERTIFICATES

All equipments shall be tested as per their corresponding specification in Tender document.
All tests (Type test, Routine test, Acceptance test) shall be carried out at bidders cost. However prices against special test for equipments have to be quoted separately. Special test shall be Owners decision.
Type and Special test has to be carried out at CPRI/ERDA or as mentioned in specification. Routine, and Acceptance tests may be carried out at manufacturer's lab.

Bidder shall submit type test certificate of all the equipment with validity of five years (on the date of bid opening carried out at CPRI/ERDA.

15.0 QUALITY PLAN

15.1 Manufacturing Quality Plan

Manufacturing Quality plan with respect to all major equipment and work has to be submitted by the successful bidder for following as a minimum:

I. An outline of the proposed work and execution plan for approval.
II. The structure of the supplier's organization for the contract
III. The duties and responsibilities assigned to staff ensuring quality of work for the contract
IV. Hold and notification points
V. Submission of engineering documents required as per specification
VI. The inspection of materials and components Inspection during fabrication /construction
VII. Final inspection & tests

Successful bidder shall include submittal of bills invoice, Bill of lading, and factory test certificate for grade, physical tests, dimension, and specific watt loss per kg of core material to the purchaser for verification in quality plan suitably.

15.2 Field Quality Plan

15.2.1 Quality Assurance Plan for various stages of execution work shall be submitted by Contractor for approval of Owner. The plan should include the Organization structure so the Safety personnel to ensure the Manpower and Material safety during the entire duration of execution.

15.2.2 Environment, Health and Safety (EHS) shall be covered in the plan submitted by Contractor.

15.2.3 A checklist to ensure the quality of equipment installation shall be submitted by Contractor for approval

16.0 INSPECTION

As per Chapter 35 (Training and Inspection) Volume - 1

17.0 TRAINING OF BRPL OFFICIALS

As per Chapter 35 (Training and Inspection) Volume - 1

18.0 MONITORING OF MATERIAL DISPATCH STATUS

Once the material is dispatched after Final clearance Transport Vehicle shall have GPS Tracking Device (Preferably Map My India Asset Tracking Device) and status of dispatch of material shall be sent to all the stake holders via SMS thru GPS Device. This shall be applicable to all the major equipments like GIS Panels, HT Panel, and Power Transformers, CRP and RTU.

19.0 OPERATION AND AFTER SALE SERVICES

Contractor shall carry out all day to day operations of entire Substation after successful commissioning for a period of 6Months. Contractor shall assign 24x7 operating personnel for operation activities.
Contractor shall appoint appropriate after sale services staff for all necessary service requirements for a period of 6 Months. Contractor shall keep all necessary spares, tools & tackles, T& P, testing equipments for successful operation and maintenance requirement for said period.

Contractor shall provide after sale support for the tenure of stipulated time.
Responsibility of Contractor O&M Engineer shall include:

a) Training of BRPL officials on successful operation of all the substation equipments including GIS, Relays and SCADA.

b) Operation and Maintenance of entire substation including GIS, Relays and SCADA.

c) Refer Annexure-O for details

BSES Rajdhani Power Limited
BSES Bhawan, Nehru Place, New Delhi- 19

TECHNICAL SPECIFICATION

FOR

CIVIL WORKS

Prepared by	**Konchada Rao**			**Rev: 0**
Reviewed by	**Piyush Shrivastava**			**Date: 24th November, 2025**
Approved by	**Ajay Karan**			

1.0 GENERAL REQUIREMENT

1.1. This chapter includes the technical requirements for Establishment of **66/11 KV GIS Substation grid at Molarband, Sarita Vihar** including associated design and preparation of all civil & structural drawings and execution of all associated civil works. This chapter deals mainly with technical specifications for the design, supervision and construction of complete civil works including structural and finishing works.

1.2. The specifications are intended for general description of work, quality and workmanship. The specifications are not however exhaustive to cover minute details and the work shall be executed according to relevant latest Indian Standards/IRC specifications/CPWD specifications. In the absence of the above, the work shall be executed according to the best prevailing practices in the trade, recommendations of relevant American or British Standards or to the instructions of Engineer. The IS standards/IRC specifications/CPWD specifications to be followed are mentioned in the technical specifications attached hereto. They shall be latest edition/version of the same issued 15 days prior to the date of opening of this tender. The Contractor is expected to get himself clarified on any doubts about the specifications etc. before bidding and the discussions recorded in writing with the Owner in respect of interpretation of any portion of this document.

1.3. The work shall be carried out according to the design / drawings to be developed by the Contractor and approved by the Owner based on Tender Drawings supplied to the Contractor by the Owner. For all buildings, structures, foundations etc. necessary layout and details shall be developed by the Contractor keeping in view the functional requirement of the Sub-Station facilities and providing enough space and access for operation, use and maintenance based on the input provided by the Owner. Certain minimum requirements are indicated in this specification for guidance purposes only. However, the Contractor shall quote according to the complete requirements.

1.4. The Contractor shall take all necessary precautions to protect all the existing equipments, structures, facilities & buildings etc. from damage. In case any damage occurs due to the activities of the Contractor on account of negligence, ignorance, accidental or any other reason whatsoever, the damage shall be made good by the Contractor at his own cost to the satisfaction of the Engineer. The Contractor shall also take all necessary safety measures, at his own cost, to avoid any harm / injury to his workers and staff from the equipment & facilities of the power station.

1.5. During the progress of work, the Engineer will exercise supervision of the work to ensure that the technical provisions of the contract are being followed and the work is being executed accurately and properly. However, such supervision shall in no way relieve the Contractor of the responsibility for executing the work in accordance with the specifications.

1.6. Before submitting the bid, the Contractor shall inspect and examine the site and its surroundings and shall satisfy himself as to the nature of the ground and subsoil, the availability of materials necessary for completion of the work, means of access to site and in general shall himself obtain all necessary information as to risks, contingencies and other circumstances which may influence or affect his offer. No extra claim consequent on any misunderstanding or otherwise shall be allowed.

1.7. During execution, if any additional requirement arises for successful commissioning of grid ,then same shall be in scope of vendor by considering all safety and quality standards in all aspects

2.0 GEOTECHNICAL INVESTIGATION

The Owner will carry out Geo Technical Investigation and Topographical Survey for the entire Sub-

Station plot including switchyard. The copy of the report will be given as an input to bidder for Civil Design & estimation work. In case of any further detailed study is required, same shall be in scope of bidder.

3.0 SITE PREPARATION

3.1. Scope

3.1.1. This clause covers the design and execution of the work for site preparation, such as clearing of the site, the supply and compaction of fill material, excavation and compaction of backfill for foundation, road construction, drainage, trenches and final topping by stone (broken hard stone). This work shall also include disposal of any non-essential/excess soil or malba.

3.2. General

3.2.1. The layout and levels of all structures, etc shall be made by the Contractor at his own cost from the general grids of the plot and benchmarks finalized / approved by the Owner. (The required filling up to formation level shall be in the scope of Vendor). The Contractor shall give all help in instruments, materials and personnel to the Owner for checking the detailed layout and shall be solely responsible for the correctness of the layout and levels.

3.2.2. The Contractor shall have to make good to all the damages to the boundary wall and gates during work execution.

3.2.3. Contractor shall develop a building layout and other layouts so that the trees inside the plot shall be avoided from cutting. In extreme conditions, if the tree cutting is unavoidable, necessary liaison for permission shall be on part of Contractor from respective Govt. Agency. Requisite formalities shall be carried out by Owner. Fee shall be borne by the Owner. Compensatory plantation shall be done (if required) by vendor; BRPL shall provide space for the same.

3.2.4. The Contractor shall develop the site area to meet the requirements of the intended purpose. The site preparation shall confirm to the requirements of relevant sections of this specification or as per stipulations of standard specifications.

3.2.5. If fill material is required, the fill material shall be suitable for the above requirement. The fill shall be such a material and the site so designed as to prevent the erosion by wind and water of material from its final compacted position or the in-situ position of undisturbed soil.

3.2.6. Material unsuitable for filling works shall be removed and replaced by suitable fill material and to be approved by the Owner.

3.2.7. Backfill material around foundations or other works shall be suitable for the purpose for which it is used and shall be compacted to the density described under Compaction. Excavated material not suitable or not required for backfill shall be disposed off by the contractor in areas as directed by Owner upto a maximum lead of 5 km. Backfill material if found having mix of earth and fly ash should not be used for top 30 cm of formation level and should be supplemented with earth at the cost of contractor. The old / existing

foundations if not required shall be dismantled by the contractor.

3.3. Excavation and Backfill

3.3.1. Excavation and backfill for foundations shall be in accordance with the relevant code.

3.3.2. Whenever water level is met during the excavation, it shall be dewatered and water level shall be maintained below the bottom of the excavation level during excavation, concreting and backfilling. Nothing extra shall be payable by the owner on this account.

3.3.3. When embankments are to be constructed on slopes of 15% or greater, benches or steps with horizontal and vertical faces shall be cut in the original slope prior to placement of embankment material. Vertical face shall measure not more than 1 m in height.

3.3.4. Embankments adjacent to abutments, culverts, retaining walls and similar structures shall be constructed by compacting of the material in successive uniform horizontal layers not exceeding 15 cm in thickness (of loose material before compaction). Each layer shall be compacted as required by means of mechanical tampers approved by the Owner. Rocks larger than 10cm in any direction shall not be placed in embankment adjacent to structures.

3.3.5. Earth embankments of roadways and site areas adjacent to buildings shall be placed in successive uniform horizontal layers not exceeding 20 cm in thickness in loose stage measurement and compacted to the full width specified. The upper surface of the embankment shall be shaped so as to provide complete drainage of surface water at all times.

3.4. Compaction

3.4.1. The density to which fill materials shall be compacted shall be as per, relevant IS and as per direction of Owner. All compacted sand filling shall be confined as far as possible. Backfilled earth shall be compacted to minimum 95% of the Standard Proctor's density at OMC. The sub grade for the roads and embankment filling shall be compacted to minimum 95% of the Standard Proctor's density at OMC. Cohesion less material sub grade shall be compacted to 70% relative density (minimum).

3.4.2. At all times unfinished construction shall have adequate drainage. Upon completion of the roads surface course, adjacent shoulders shall be given a final shaping, true alignment and grade.

3.4.3. Each layer of earth embankment when compacted shall be as close to optimum moisture content as practicable. Embankment material which does not contain sufficient moisture to obtain proper compaction shall be wetted. If the material contains any excess moisture, then it shall be allowed to dry before rolling. The rolling shall begin at the edges overlapping half the width of the roller each time and progress to the center of the road or towards the building as applicable. Rolling will also be required on rock fills. No compaction shall be carried out in rainy weather.

3.5. Requirement for fill material under foundation

3.5.1. The thickness of fill material under the foundations shall be such that the maximum pressure from the footing, transferred through the fill material and distributed onto the original undisturbed soil will not exceed the allowable soil bearing pressure of the original undisturbed soil. For expansive soils the fill materials and other protections etc. to be used under the foundation has to be approved by the Owner.

4.0 CODES AND STANDARDS

All standards, specifications, acts and code of practice shall be followed. In case of conflict between this specification and those (IS standard/ IRC specification/CPWD Specification, etc.) referred to herein, the former shall prevail.

5.0 SUBMISSIONS

The following documents shall be submitted by the Contractor for approval of the BRPL prior to commencement of fabrication and erection / construction.
This list is not exhaustive but indicative only. Final list of drawings shall be prepared by successful bidder during detailed engineering. Bidder shall submit the qualification details of his licensed Architect & structural engineer (Approved by any Govt organization for detailed engineering/Structural design/approved by Institution of Engineers (India).

i. Design calculation, general arrangement drawings, foundation drawing & detailed erection / construction drawings including R/F drawings for Sub-Station Control Room Building.
ii. Foundation design and drawing of Cable Pot Head.
iii. Foundation design & drawing of all equipment foundations.
iv. Structural steel fabrication drawings for Cable Pot & equipment support structure.
v. Site preparation, filling up to formation level, removal of trees, if any and site cleanliness
vi. Foundation design & drawing of Power Transformer
vii. Design & drawing of transformer grating, firewall & burnt oil tank
viii. Foundation design & drawing for lighting pole.
ix. Foundation design & drawing of Capacitor bank (roof/yard as decided during engineering), Auxiliary Transformer and design of fencing for both.
x. Complete fencing along with gate for the Sub-Station yard
xi. Details of Indoor and Outdoor Cable Trenches with cable tray supports and trench covers
xii. Design & drawing of Rainwater Harvesting System, sewerage system including septic tank, water supply arrangement, landscaping, etc.
xiii. Design & drawing of roads and complete drainage system (with final connection to Rain Water Harvesting recharge pit) within Sub-Station including crossings.
xiv. Design & drawing Security room.
xv. Design & drawing NIFPS system & underground water tank.

6.0 SUB-STATION CONTROL ROOM BUILDINGS GENERAL REQUIREMENTS

6.1. General

6.1.1. The scope includes the design, engineering and construction including anti-termite treatment, plinth protection, DPC of buildings including sanitary, water supply, electrification, fire fighting system, etc. The building shall be of RCC framed structure of minimum concrete grade M25. The Sub-Station Building shall include rooms as specified below:

S. No.	Facility
i	Control & 11kV S/W Room
ii	GIS Hall
iii	Cellar floor
iv	Battery Room, Charger Room, Maintenance room and office rooms
v	Pantry
VI	Toilet (Male & Female separately)
VII	Staircase (for approach till topmost roof slab) including separate staircase for Fire-escape.
VIII	Steel staircase with all safety features for approach till mumty slab

6.1.2. Minimum floor area requirements have been given in tender drawings, which may be increased at the time of detailed engineering to suit project requirements.

6.1.3. An open space of 1200 mm minimum shall be provided on the periphery of the rows of panel and equipment generally in order to allow easy operator movement and access as well as maintenance.

6.1.4. The building shall be aesthetically designed keeping in view the surrounding landscape; proper architecture shall be used to design the exterior look and finish. The architectural drawing shall be submitted for Owner's approval.

6.1.5. Future extension of one floor shall be considered at the time of design. Any other possibility of annex building shall be taken care of while finalizing the layout of the control room building.

6.1.6. Control Room cum Administrative building shall be constructed as per the approved drawings by Owner. CPWD specification shall be followed in all the building works. The clear height of building shall be minimum 4.50 m (from Finish floor level to bottom of roof beam of First floor & Second Floor). The height of GIS hall shall be as per requirement of GIS equipment & EOT.

6.1.7. Cable cellar shall be provided in the building. The clear height of cable caller shall be minimum 3.00 m (from floor level to bottom of roof beam of Ground floor).

6.1.8. Plinth level of sub-station building shall be 750mm above the internal road. Internal road level shall be 750mm above the external main road.

6.2. Design

a) The Building shall be designed on Green Building Concept duly certified by (IGBC Green Service Building rating certification/Svagriha Certification). The design of control room building shall be such decided that's minimum one floor can be added in future.

Following parameters shall be followed: -

- To the requirements of the National Building Code of India and the standards quoted therein. The contractor shall also arrange approval of building from any local authorities such as MCD or fire officer if required so. The official fees shall be born by BRPL.
- For the specified climatic & loading conditions.
- The building shall have framed super structure.
- To adequately suit the requirements of the equipment and apparatus contained in the buildings and in all respects to be compatible with the intended use and occupancy.
- With a functional and economical space arrangement.
- To be aesthetically pleasing. Different structures shall show a uniformity and consistency in architectural design.
- To allow for easy access to equipment and maintenance of the equipment.
- With wherever required, fire retarding materials for walls, ceilings and doors which would prevent supporting or spreading of fire.
- With materials preventing dust accumulation.

b) Suitable expansion joints shall be provided in the longitudinal direction wherever necessary with provision of twin columns.

c) Individual members of the buildings frame shall be designed for the worst combination of forces such as bending moment, axial force, shear force, torsion etc.

d) Permissible stresses for different load combinations shall be taken as per relevant IS Codes.

e) The building lighting shall be designed in accordance with the requirements of relevant section.

f) The building auxiliary services like exhaust and ventilation systems, fire protection and detection systems and all other miscellaneous services shall be designed in accordance with the requirements specified in relevant section or elsewhere in the Specification for the project.

g) Two nos. of emergency exits shall be provided in the building.

6.3. Design Loads

Building structures shall be designed for the most critical combinations of dead loads, super- imposed loads, equipment loads, crane load, wind loads, seismic loads, and temperature loads Dead loads shall include the weight of structures complete with finishes, fixtures and partitions and should be taken as per IS:875. Super-imposed loads in different areas shall include live loads, minor equipment loads, cable trays, small pipe racks & hangers and erection, operation and maintenance loads. Equipment loads shall constitute, if applicable, all load of equipments to be supported on the building frame The wind loads shall be computed as per IS 875, Seismic Coefficient method shall be used for the seismic analysis as per IS 1893 with importance factor 1.5.

For crane loads an impact factor of 25% and lateral crane surge of 10% (of lifted weight + trolley weight) shall be considered in the analysis of frame according to provisions of IS : 875 (latest revision). The longitudinal crane surge shall be 5% of the static wheel load. For temperature loading, the total temperature variation shall be considered as 2/3 of the average maximum annual variation in temperature. The average maximum annual variation in temperature for the purpose shall be taken as the difference between the mean of the daily minimum temperature during the coldest month of the year and mean of daily maximum temperature during the hottest month of the year. The structure shall be designed to withstand stresses due to 50% of the total temperature variation. Wind and Seismic forces shall not be considered to act simultaneously.

Floors/slabs shall be designed to carry loads imposed by equipment. Floors shall be designed for live loads as per relevant IS codes. Cable and piping loads shall also be considered additionally for floors where these loads are expected.

In addition, beams shall be designed for any incidental point loads to be applied at any point along the beams, the floor loads shall be subject to Owner's approval.

For consideration of loads on structures IS: 875, the following minimum superimposed live loads shall however be considered for the design.

RCC-Floor	5 KN/M2	for offices,
GIS & all Equipments Room Floor	15 KN/M2 (min)	actual requirements if higher than 15KN/M2 based on equipment weight and Layout plan
Stairs & balconies	5 KN/M2	
Chequered plate floor	4 KN/M2	

Any additional load coming in the structure shall be calculated as per IS: 875.

6.4. Submission

The following information shall be submitted for review and approval to the Owner:

a) Design criteria shall comprise the codes and standards used. Applicable climatic data including wind loads, earthquake factors, maximum and minimum temperatures applicable to the building locations, assumptions of dead and live loads, including equipment loads, impact factors, safety factors and other relevant information.

b) Structural design calculations and drawing (including construction/fabrication) for all reinforced concrete and structural steel structures.

c) Fully, dimensioned concept plan including floor plans, cross sections, longitudinal sections, elevations and perspective view of each building. These drawings shall be drawn at a scale not

smaller than I : 50 and shall identify the major building components.

d) Fully dimensioned drawings showing details and sections drawn to scales of sufficient size to clearly show sizes and configuration of the building components and the relationship between them.

e) Product information of building components and materials, including walls partitions flooring ceiling, roofing, door and windows and building finishes.

f) A detailed schedule of building finishes including color schemes.

g) A door & window schedule showing door types and locations, door lock sets and latch sets and other door hardware.

h) Copy of all tests/ studies/ investigation carried out by bidder as per scope.

Approval of the above information shall be obtained before ordering materials or starting fabrication or construction as applicable.

6.5. Flooring

Flooring in various rooms of control room building shall be as per detailed schedules given in Table – 1 - Finishing Schedule.

1. False flooring: Providing and fixing Raised Access Flooring .The Access raised floor shall be heavy grade UNIFLOOR FS800H with point load of 3.6KN/over 25mm sq. and UDL of 15 KN /M2 panels manufactured from steel with lightweight cementitious core in the size 600x600x35mm.The bottom of the panel shall be embossed in hemispherical shape to give strength and flexural rigidity on the exposed surface for lifetime protection and shall be zinc whisker free. The panel has to be placed on the pedestal base plate 100x100x8mm x 25mm solid road 450mm/600MM height 75x75x4mm mm top plate made from all steel zinc plated construction. Pedestal assembly shall provide for easy adjustment of leveling and accurately align panels to ensure lateral restrain. Pedestal head shall be designed to avoid rattle or squeaks. The steel base plate of the pedestal shall be fixed on to the sub-floor with epoxy pedestal adhesive and /or mechanical fixing. An all-steel rectangular stringer system having pre punched holes at both ends to ensure correct alignment with pedestal heads be applied for maximum stability. The panel shall be finished with high abrasion anti-static HPL in size 600x600x0.9mm with beading on all sides to provide protection of edges as per Drawings and as per Manufacturers recommendations. Providing Heavy Duty Double Suction Panel Lifter is included in item. Grommets for Easy Cable Access shall be provided as per design wherever required.

600 mm Finished Floor Height (FFH)

6.6. Walls

Control room building shall be of framed superstructure. All walls shall be non-load bearing walls. Minimum thickness of walls shall be 340mm upto DPC level in cement mortar 1:4 (1 Cement: 4 Coarse sand) and 230mm above DPC level in cement mortar 1: 4 (1 Cement: 4 coarse sand). Parapet walls (Incl. s/stn building and mumty) shall be 230 mm thick and 1100mm high from top of roof treatment. 50 mm CC coping to be provided on parapet walls.

6.7. Plastering

All internal walls shall have minimum 12mm/ 15mm thick 1:4 (1 Cement : 4 coarse Sand) cement sand plaster. The ceiling shall have 6mm thick 1:3 cement sand plaster.

6.8. Finishing

All external surfaces (S/stn building, boundary wall and other structures) shall have Texture finish of Make UTTPL (Ultratech Texture Paints Pvt. LTD) as per below detail:

- Building area: GRANITE ATELOI SA – 36-50% LIGHT
- Beam/ column: GRANITE ATELIO SA – PINK

Granito Attiloe:
Application Process:
Thickness 1.5- 1.8mm
1. Applying Priming coat of acrylic Primer mixed with wall sealer & water in the ratio of (1:1).
2. Repair check of plaster surface with Exterior grade cement mixed with Primer. (Whereas cement is provided by client on FOC basis).
3. First coat to obtain highly dense smooth appearance of 0.5 to .7 mm thick by applying over the primer to be applied with spray / trowel depends upon the surface.
4. Second coat of 100% natural crushed granite material 0.8 to .9 mm thick by applying a spray gun with a pressure of 2bhp to achieve desired finish.
5. Two coat of water base Protective.

6.9. False Ceiling

a) Providing and fixing false ceiling at all height including providing and fixing of frame work made of special sections, power pressed from M.S. sheets and galvanized with zinc coating of 120 gms/sqm (both side inclusive) as per IS : 277 and consisting of angle cleats of size 50mm length x 50 mm wide x 3.0 mm thick with flanges of at 1200 mm centre to centre, one flange fixed to the steel truss members and other flange of cleat fixed to the angle hangers of 50x50x3 mm of required length with nuts & bolts of required size and other end of angle hanger fixed with intermediate G.I. channels 45x15x0.9 mm running at the spacing of 1200 mm centre to centre, to which the ceiling section 0.5 mm thick bottom wedge of 80 mm with tapered flanges of 26 mm each having lips of 10.5 mm, at 450 mm centre to centre, shall be fixed in a direction perpendicular to G.I. intermediate channel with connecting clips made out of 2.64 mm dia x 230 mm long G.I. wire at every junction, including fixing perimeter channels 0.5 mm thick 27 mm high having flanges of 20 mm and 30 mm long, the perimeter of ceiling fixed to wall/partition with the help of rawl plugs at 450 mm centre, with 25mm long dry wall screws @ 230 mm interval, including fixing of gypsum board to ceiling section and perimeter channel with the help of dry wall screws of size 3.5 x 25 mm at 230 mm c/c, including jointing and finishing to a flush finish of tapered and square edges of the board with recommended jointing compound , jointing tapes , finishing with jointing compound in 3 layers covering upto 150 mm on both sides of joint and two coats of primer suitable for board, all as per manufacturer's specification and also including the cost of making openings for light fittings, grills, diffusers, cutouts made with frame of perimeter

channels suitably fixed, all complete as per drawings, specification and direction of the Engineer in Charge .
12.0 mm thick tapered edge calcium silicate board is to be provided.(In control Room)

b) False ceiling in armstrong fine fissured butt edge tiles 595x595mm : Providing & fixing of armstrong fine fissured butt edge tile ceiling complete in all respects using armstrong channels, hangers etc. Item complete with all edge cut tiles and required cutting for lights, speakers, detectors, diffures, etc. Tile code-Armstrong fine fissured NF Butt edge (RH 99E)

c) False ceiling in gypsum board : P/F false ceiling, drops, ceiling " design in gypsum board. Providing and fixing at all heights false ceiling of 12.5MM thick tapered edge gypsum board confirming to IS: 2095 including providing and fixing of frame work made of special sections power pressed from MS Sheet and galvanized in accordance with Zinc coating 600 as per IS: 277 and consisting of angel cleats of size 25mm wide X 16mm thick with flanges of 22mm and 37mm at 1200 center to center one flange fixed to the ceiling with dash fastener 12.5mm DIA 40mm

6.10. Doors, Windows and ventilators

The details of doors and windows of the sub-station building shall be as under:

.

a) Steel door: Steel doors with Door Frames made with 1.5 mm (16 gauge) thick galvanized steel sheet pressed multi bend to S/L Rebate of Size 120 x 60 mm and Door Shutter shall be made with 18 gauge thick GI sheet pressed formed to provide a 46 mm thick fully flushed Door leaf skin panel shell with lock seam joint at stile edges and filled with Honey comb structure with metallic reinforcement at top, bottom and side surroundings. The item also includes the provision for required iron mongery and Powder coated Finish in RAL Color shades.
Each door leaf with 4 hinges (Make- Dauerhaft/ Hafele/ Equivalent), 1 no.of Door closure (make- Dauerhaft/ Hafele/ Equivalent), 1 no. of external trim (make- Dauerhaft/ Hafele/ Equivalent), , 1 no. Three Point Panic Bar (Make-Dauerhaft / Hafele/ equivalent) with necessary screws etc all complete.

b) Fire proof doors: Providing and fixing of Hollow metal fire rated doors as per IS 3614 part-1 & part-2 for stability and integrity. Pressed Galvanized steel confirming to IS 277 with the following specification. Recommended fire door should have been tested earlier of similar design at CBRI for maximum rating of 2hrs tested with vision panel of minimum 0.1 Sqmtr per shutter as requirement & application. Individual Test certificates should also be available for glass used in vision lites confirming the required fire ratings /panels being a part of the fire door assembly. Doors should be finished in Thermosetting Powder Coating desired RAL Shades. Manufacturer test certificate shall cover doors both single & double leaf doors and Hardwares should pass European certificate "CE" of conformity / UL with required fire ratings. Any deviation in specification and sheet thickness other than what is mentioned in the test certificates are not allowed. Proper label confirming the type of door and the hourly rating is mandatory. The manufacturer should be compliant to ISO 9001: 2008 and CE certified, manufacturer should be covered under IGBC scheme. Door frame shall be double rebate profile of minimum size 154mm X 77 mm made out of 1.60mm (16gauge) minimum thick galvanized steel sheet. NDRF 154x77 Frames shall be Butt jointed and field assembled with self bolted. The frames should be finished with Thermosetting Powder Coating in desired RAL Shade. All provision should be mortised, drilled and tapped for receiving appropriate hardware. Frames should be provided with back plate bracket and anchor fasteners for installation on a finished plastered masonry wall opening.

Door leaf shall be minimum 49mm thick fully flush double skin door with or without vision lite. Door leaf shall be manufactured from 1.25mm (18guage) minimum thick galvanised steel sheet. The internal construction of the door should be rigid reinforcement pads for receiving appropriate hardware. The infill material shall be Rockwool treated with Viper FRS 881 LH. All doors NSD 12049 shall be factory prepped for receiving appropriate hardware and provided with necessary reinforcement for hinges, locks, and door closers. The edges should be interlocked with a bending radius of 1.4mm. For pair of doors astragals has to be provided on the meeting stile for both active and inactive leaf. Vision lite wherever applicable should be provided as per manufacturers recommendation with a beeding and screws from inside. However the glass should be contraflam Door Lite 11 mm clear 120 min fire rated and partially insulated (EW120), Non Wired Toughened, interlatered glass having a sound reduction of >37dB, LT of 86% and compliant to class 2(B)2 category of Impact Resistance as per EN 12600 standard from Saint Gobain.
Each door leaf with 4 hinges (Make- Dauerhaft/ Hafele/ Equivalent), 1 no.of fire rated Door closure (make- Dauerhaft/ Hafele/ Equivalent), 1 no. of external trim (make- Dauerhaft/ Hafele/ Equivalent), 1 Fire Rated Wired Glass(200x300mm), (Make-Pilkington/ equivalent), 1 no. Three Point Panic Bar (Make-Dauerhaft / Hafele/ equivalent) with necessary screws

c) Aluminium Doors, Windows & Ventilators: Aluminium doors, Windows & Ventilators are Powder coated Aluminium Hindalco/ Jindal or equivalent extruded sections (minimum 3.0 mm thick) as per IS 733 & 1285 for windows and ventilators (minimum thickness of powder coating 50 micron of approved colour). Glazing for windows and ventilators will be hermetically sealed double glazing (DGU) with (6+12+6) i.e. 06 mm clear toughened glass +12 mm air gap + 6 mm toughened Glass (Heat reflective colour glass).

Door/ Window frame	101.60x44.50x3.18mm Code: 20011(Jindal)
Door/ Window Shutter	83.50x44.45x3.18mm Code: 19583 (Jindal)
Door/Windows middle section	83.50x44.45x3.27mm Code: 19593 (Jindal)
Square Tube Inside window Beading	25x25x2mm
Beading in Doors	Code: 19377 (Jindal)
Ventilator frame	101.60x44.50x3.18mm Code: 20011(Jindal)
Ventilator Middle frame	101.60x44.50x3.18mm Code: 20010 (Jindal)
Ventilator outerside beading Angle	35x35x2mm
Square Tube Inside ventilator Beading	25x25x2mm

d) Doors in various rooms of control room building shall be as per detailed schedules given in Table – 1. All entrance doors at ground floor/ cellar shall be steel doors. Partition door between adjacent panel rooms shall be 2 hours fire rated

e) The details for all other doors and windows shall be as per finish schedule Table-I and tender Drawings with the relevant IS code.

f) Floor springs and hydraulic door closer of make Dorma or equivalent to be provided.

g) To maintain proper size of opening for doors and windows, contractor shall provide rough round Aluminum tube of size 40 x 20 mm around all opening before plaster work.

h)The contractor shall provide a door and window sill of granite stone of size 18-20 mm.

i) All windows at ground floor/ cellar shall be provided with MS Grill.

6.11. Internal Electrification

Electrical wiring shall be through heavy duty concealed conduits. All fixtures and wiring shall be of best quality and ISI marked. (Fixtures shall be provided as per provision of energy conservation act). Internal wiring shall include all fittings and fixtures, control panel boards, main switch MCB's, etc.

6.12. Plumbing & Sanitation

a) All plumbing and sanitation works shall be executed to comply with the requirements of the appropriate bye-laws, rules and regulations of the Local Authority having jurisdiction over such matters. The Contractor shall arrange for all necessary formalities to be met in regard to inspection, testing, obtaining approval and giving notices etc.

b) PVC sintex or equivalent make Roof water tank of adequate capacity depending on the number of users for 24 hours storage shall be provided. Minimum 2 Nos. 1000 liters capacity shall be provided.

c) CPVC pipes & Fittings shall be used for internal & external piping (both concealed) work for potable water supply.

d) UPVC pipes shall be used for sanitary works above ground level.

e) Each toilet shall have minimum fittings

i) Wall Hung Water closet (European type W.C. pan) Jaquar/Kohler as per approval of Engineer In charge

ii) Half Stall Urinal (580 x 380 x 350 mm) Jaquar/Kohler as per approval of Engineer Incharge

iii) Counter top Wash basin (630 x 450 mm) Jaquar/Kohler as per approval of Engineer Incharge

iv) Bathroom mirror (600 x 450 x 6 mm thick) hard board backing

v) CP brass towel rail (600 x 20 mm) with C. P. brass brackets.

vi) Soap holder and liquid soap dispenser.

f) Water cooler for drinking water with adequate water storage facility shall be provided and located near control room instead of near toilet block.

g) 1 No stainless steel A ISI 304(18/8) kitchen sink with Drain board (510 x 1040 x 225mm bowl depth as per IS 13893 for pantry shall be provided complete with all fittings

h) All fittings, fastener, grating shall be chromium plated.

i) All sanitary fixtures and fittings shall be of approved quality and type manufactured by well known manufacturers. All items brought to site must bear identification marks of the type of the Manufacturer.

j) Soil, waste and drain pipes, for underground works shall be UPVC Pipes for areas not subject to traffic load. Heavy-duty cast iron pipes/ RCC NP-04 Pipes shall be used otherwise.

7.0 STORM WATER DRAINAGE FOR CONTROL ROOM BUILDING

The building drain shall be provided for the collection of storm water from the roofs. This water shall be collected in chambers and these chambers shall drain to the main drainage system of the station which shall in turn be connected to rain water harvesting recharge pits. Overflow of RWH Pits shall be connected to main drain

G.I Pipes of 150 MM dia rain water down comers shall be provided to drain off the rain water from the roof.. The number and size of down comers shall be governed by IS:1742 and IS:2527. Pipe will be covered by making suitable arrangement in structure and to be matched with external Finishes.

All external drains shall be covered with precast perforated RCC covers of suitable size and thickness.

For all buildings, suitable arrangement for draining out water collected from equipment blow down, leakages, floor washings fire fighting etc. shall be provided for each floor.

8.0 DEVELOPMENT OF YARD

8.1. Scope

8.1.1. The Contractor shall furnish all labour, equipments and materials required for complete performance of the work in accordance with the drawings, specifications and direction of the Owner.

8.1.2. Stone spreading shall be done in the Outdoor Sub-Station Yard area, Power Transformer, Capacitor Bank and wherever equipments and structures are to be provided under the present scope of work.

General Requirement:

The material required for site surfacing / stone filling shall be free from all types of organic materials and shall be of standard quality and as approved by the Owner.

Test for aggregates should be as follows:

a) Sieve Analysis limits (Gradation)

As per IS: 383-1970

The material to be used for stone filling / site surfacing shall be uncrushed / crushed / broken stone of 20 mm nominal size (ungraded single size) conforming to Table 2 of IS:383 - 1970.

Sieve Analysis (Gradation):
(IS: 383 - Table - 2)

Sieve size	% passing by weight

40mm	100
20mm	85-100
10mm	0 – 20
4.75mm	0-5

One test shall be conducted for every 50 cum.

b) Hardness:

Abrasion value (IS: 2386 Part-IV) - not more than 40%
Impact value (IS: 2386 Part-IV) - not more than 30% and frequency shall be one test per 50 cum with a minimum of one test per source

c) Flakiness Index

As per IS: 2386 Part I

8.1.3. Before taking up the final yard treatment, anti-weed treatment shall be applied in the switchyard area wherever yard treatment is to be done, and the area shall be thoroughly de-weeded including removal of roots. The recommendation of local agriculture or horticulture department shall be sought wherever feasible while choosing the type of chemical to be used. Nevertheless the effectiveness of the chemical shall be demonstrated by the contractor in a test area of 10M x 10M (approx.) and monitored over a period of two to three weeks by the Engineer-in-Charge. The final approval shall be given by Engineer-in-Charge and final approval given based on the results.

8.1.4. The anti-weed chemical shall be procured from reputed manufacturers. The dosage and application of chemical shall be strictly followed as per manufacturer's recommendation. The contractor shall be required to maintain the area free of weeds for a period of 1 year from the date of application of 1st dose of anti-weed chemicals

8.1.5. After all the structures/equipments are erected and anti-weed treatment is complete, the surface of the substation area shall be maintained, rolled/compacted to the lines and grades as decided by Engineer-in-Charge. De-weeding including removal of roots shall be done before rolling is commenced. Engineer-in-Charge shall decide final formation level so as to ensure that the site appears uniform free from undulations. The final formation level shall however be very close to the formation level using manual or machine roller with suitable water sprinkling arrangement to form a smooth and compact surface.

8.1.6. After anti-weed treatment & compaction of earth, final yard treatment shall be Carried out in the 4 layers as follows:

a. Providing and laying in position 75mm thick base layer of cement concrete 1:5:10 (1 cement: 5 coarse sand : 10 brick aggregate 40mm nominal size).

b. Flat brick flooring with over burnt bricks /class designation 100 as per approval of BRPL on the bed of 12 mm thick cement mortar 1:6 (1 cement : 6 coarse Sand) and filling the joints 12mm thick all around the bricks with same mortar.

c. Over the flat brick flooring a layer a final surface course of minimum 100 mm thickness of 20 mm nominal size (single size ungraded) broken stone shall be spread and uniformly leveled.

8.1.7. In areas that are considered by the Engineer-in-Charge to be too congested with foundations and structures for proper rolling of the site surfacing material by normal rolling equipments i.e., clear space between any 02 adjacent structures/foundation less than 01 meter, these adjoining structures/foundations shall constructed as a monolithic structure.

8.1.8. The sub grade shall be in moist condition at the time the cement concrete is placed. If necessary, it should be saturated with water for not less than 6 hours but not exceeding 20 hours before placing of cement concrete. If it becomes dry prior to the actual placing of cement concrete, it shall be sprinkled with water and it shall be ensured that no pools of water or soft patches are formed on the surface.

9.0 SUB-STATION TRENCHES

9.1. The cable trenches and precast removable RCC cover (with lifting arrangement) shall be constructed using RCC of minimum grade M25.

9.2. The RCC cable trench walls and raft shall not be less than 150 mm thick.

9.3. The cable trench wall shall be designed for the following loads.

- Dead load of 155 kg/m length of cable support + 75 Kg on one tier at the end.(Wall thickness Minimum-150 mm)
- Triangular earth pressure + uniform surcharge pressure of 2T/m2.

9.4. Cable trench covers shall be 50 mm thick. All trench covers/ drain covers shall have desired IRC Mesh of size 75x25mm (wire size 6 gauge/ 7.75 kg/m2) welded to M.S. frame of angle 50 x 50 x 6 mm all round the cover. Size of covers shall be as per site requirement / direction of Engineer in Charge.

9.5. Size of covers shall be per site requirement / direction of Engineer In Charge.

9.6. All cable trenches inside the buildings shall have covers comprising of 6 mm thick chequered plates fixed on angle 40 x 40 x 5 mm frame with arrangement of MS holes for lifting of cover.

9.7. Cable trench crossing the road/rails shall be designed for class AA loading of IRC/relevant IS Code and should be checked for transformer/reactor loading.

9.8. Trenches shall be drained. Necessary sumps be constructed and submersible sump pumps with stand by arrangement shall be supplied/ installed. Cable trenches shall not be used as storm water drains.

9.9. The top of cable trench shall be such that the surface rain water does not enter the trench.

9.10. All metal parts inside the trench shall be connected to the earthing system.

9.11. The trench bed shall have a perpendicular to the run. Trench wall shall not foul with the foundation. Suitable clear gap shall be provided.

9.12. The trench bed shall have a slope of 1/500 along the run & 1/250 perpendicular to the run.

9.13. All the construction joints of cable trenches i.e. between base slab to base slab and the junction of vertical wall to base slab as well as from vertical wall to wall and all the expansion, joints shall be provided with approved quality PVC water stops of approx. 230 x 5 mm size for those sections where

the ground water table is expected to rise above the junction of base slab and vertical wall of cable trenches.

9.14. Cable trenches shall be blocked at the ends if required with brick masonry in cement sand mortar 1:6 and plaster with 12mm/15mm thick 1:4 cement sand mortar.

9.15. Construction of Cable Trench 11Kv & 66Kv upto the plot boundary wall shall be in the scope of Vendor.

10.0 SUB-STATION DRAINAGE SYSTEM

Adequate site drainage system shall be provided by the Contractor. The Contractor shall design the storm water drainage system covering all culverts, ditches, drains, etc. The run off shall be calculated on the basis of maximum rainfall intensity that is likely to occur over the catchment area in one hour period on an average of once in ten years. The surface of the site shall be sloped to prevent the ponding of water. Outfall of drainage shall be suitably connected to rainwater harvesting recharge pits. While designing the drainage system following points shall be taken care of:

1. The maximum velocity for pipe drains and open drains shall be limited to 2.4m/sec and 1.8m/sec respectively. However, minimum non-silting velocity of 0.6m/sec shall be ensured. Longitudinal bed slope not milder than 1 in 1000 shall be provided.

2. For design of RCC pipes for drains and culverts, IS: 456 and IS: 783 shall be followed.

3. The Contractor shall ensure that water drains are away from the site area and shall prevent damage to adjacent property by this water. Adequate protection shall be given to site surfaces, roads, ditches, culverts, etc. to prevent erosion of material by water.

4. For pipe drains, concrete pipe of class NP3 shall be used. However, for road crossings etc. higher strength pipe of class NP4 shall be provided. For rail crossings, pipes conforming to railway loading standards or at least NP4 class shall be provided. Manholes shall be provided at every 30m interval, at connection points and at every change of alignment.

5. Pipe drains shall be connected through manholes at an interval of maximum 15mtrs. Effluents shall be suitably treated by the Contractor to meet all the prevalent statutory requirements and local pollution control norms and treated effluents shall be conveyed to the storm water drainage system at a suitable location for its final disposal.

6. All internal site drainage system, including the final connection/disposal to rainwater harvesting recharge pits shall be part of Contractor's scope including all required civil work, mechanical & electrical systems. The Contractor shall connect drain(s) at one or more points to rainwater harvesting recharge pits as feasible at site. The drainage layout of the substation shall be approved by the Owner & all works shall be carried out by the Contractor.

7. The drainage scheme and associated drawings shall be got approved from the Owner.

11.0 SUB-STATION ROAD

11.1. Inside substation roads to be provided for access along with car parking for at least three cars and two

wheeler parking for three vehicles. Building, Roads and parking are in the scope of bidder. Layout of the roads shall be based on layout drawing for the substation. Parking areas shall be provided for Site personnel and visitors as per layout drawing. Adequate turning space for vehicles shall be provided and bend radius shall be set accordingly. It has to be connected suitably with roads.

11.2. All substation roads shall be constructed so as to permit transportation of all heavy equipment up to 60MT. The main approach roads upto Control Room Building and other relevant roads will be RCC/ Cement Concrete Roads. The other connecting roads and pathways shall be of Paver blocks/ CC Road as per site requirement. The pavers blocks used for the roads shall be minimum 80mm thick with compressive strength not less than 450Kg/cm2.

11.3. Road construction shall be as per IRC standard.

11.4. Adequate provision shall be made for road drainage.

11.5. All the culverts and its allied structure (required for road/rail, drain trench crossings etc.) shall be designed for class AA loading as per IRC standard/IS code.

TRANSFORMER FOUNDATION, RAIL TRACK/ ROAD CUM RAIL TRACK

11.6. The Contractor shall provide a permanent transfer track system integrated with the power transformer foundation to enable installation and replacement of any failed unit by the spare unit located at the site. The transfer track system shall be suitable to permit the movement of any failed unit fully assembled with integral radiators and oil, without the de-energization of any other equipment in the station. This system shall enable the removal of any failed unit from its foundation to a repair area and the installation of the spare unit. This system, preferably, shall not interfere with the normal internal road and trench system. If trench/ drain crossings are required then suitable RCC culverts shall be provided in accordance with I.R.C Code/ relevant IS.

11.7. Rail track to be provided for all PTR foundations upto Grid Main Entry gate and shall be minimum of RCC M-25 grade. The space between the tracks shall be suitably filled with Concrete M-25. up to the formation level.. Suitable drainage system between the tracks shall be provided.

11.8. The rails shall be of first quality 52 kg/m medium manganese steel as per Indian Railway specification T-12-64 and its subsequent revision, joined together by fish plates as per Indian Railway specification T-1/57 and their drawing no. 090M and 27mm diameter fish bolts. No joint shall be provided at less than L/3 of the longest part.

11.9. The grating shall be made of MS flat of size 50mmx 5mm placed at 30mm center to center welded inclined (sideways) at an angle of 45-60 degrees from horizontal axis and 25mmx5mm MS flat at a spacing of 150mm at right angle to each other. Maximum length of grating shall be 1500mm and width shall not be more than 500mm. The gratings supported on ISMB 150mm shall be placed at the formation level and will be covered with 100mm thick layer of broken/crushed/non-crushed stone having size 40mm to 60mm which acts as an extinguisher for flaming oil.

12.0 OIL RECOVERY & BURNT OIL TANK

12.1. The oil recovery system shall be provided for all transformers (containing insulating oil or any flammable or polluting liquid) in order to avoid spread of fire by the oil and for environmental

protection.

12.2. Each transformer including oil conservator tank and cooler banks etc. shall be placed in a transformer pit surrounded by retaining walls (pit walls). The clear distance of the retaining wall from the transformer shall be 20% of the transformer height or 0.8m whichever is more. The transformer pit thus formed shall have a capacity equal to volume of oil in the transformers. The MS grating placed at the formation level shall be covered with 100mm thick gravel of 40mm nominal size which acts as an extinguisher for flaming oil.

12.3. Each transformer pit shall be drained towards a sump pit whose role is to recover the infiltrating water and the drained oil from the pit. The sump pit shall have sufficient capacity to receive without overflowing the oil content of large transformers plus the water content of any fixed fire fighting system and a certain quantity of rain water collected from the pit connected to it. The system shall be provided with air vents large enough to avoid over- pressure during operation. The whole internal surface of the sump pit should be impermeable.

12.4. The retaining walls which make up the transformer pit shall be made of reinforced cement concrete, with minimum grade of concrete as M-25.

12.5. The floor of the transformer pit shall be of Reinforced cement concrete of grade M25.

12.6. A Device showing level of sump pit shall be fitted along with the automatic submersible pumping system, which shall have sufficient capacity to evacuate the fire fighting & rainwater from the sump pit..

12.7. If the heights of the retaining wall which form the transformer pit exceed 60cm, steps shall be provided to facilitate access to the transformer and reactor.

12.8. When designing the transformer pit, the movement of the transformer must be taken into account.

12.9. It must be assured that the coefficient of crushed stone (granular material) penetration which fills the transformer pit will be retained regardless of the climatic conditions.

13.0 FIRE PROTECTION WALLS

13.1. General

13.1.1. Fire protection walls shall be provided, wherever required, in accordance with Tariff Advisory Committee (TAC) and certifying all mandatory safety clearances.

13.2. Material

13.2.1. The firewall shall be made up of reinforced cement concrete (at least M-25 grade) as per the system requirements. Materials used must conform to the standards of the National Fire Prevention Association & TAC Norms.

13.3. Fire Resistance

13.3.1. The firewall shall have a minimum fire resistance of 3 hours. The partitions, which are made to reduce the noise level of the transformers, shall have the same fire resistance where the partitions are also used as firewalls. The walls of the building, which are used as firewalls, shall also have a minimum fire resistance of 3 hours.

13.3.2. The firewall shall be designed to protect against the effect of radiant heat and flying debris from an adjacent fire.

13.4. Dimensions

13.4.1. The barrier shall extend at least 500 mm above the transformer bushing and pressure relief vent and length wise 600 mm beyond the transformer including any radiators and tap changer enclosure.

13.4.2. These dimensions might be reduced in special cases, as per the approval of owner where there is lack of space. A minimum of 2.0 meter clearance shall be provided between the Equipments e.g. Autotransformer/Power transformer.

13.4.3. The building walls, which act as firewalls, shall extend at least 1 m above the roof in order to protect it. Building wall adjacent to transformer shall act as fire resistance wall and shall be made up of solid concrete blocks

13.5. Mechanical Resistance

13.5.1. The firewall shall have the mechanical resistance to withstand local atmosphere conditions. If this wall shall serve as a support for equipment such as insulators etc, it mechanical rigidity must be increased. Connecting the walls by steel or other structures which may produce a reversing torque if overheated shall be avoided.

14.0 DESIGN CONSIDERATION FOR FOUNDATION

14.1. General

14.1.1. Work covered under this Clause of the Specification comprises the design and construction of foundations and other RCC constructions for switchyard structures, equipment supports, trenches, drains, jacking pad, pulling block, control cubicles, bus supports, Power transformer/Reactors, marshalling kiosks and auxiliary equipments, tanks or for any other equipment or service and any other foundation required to complete the work. This clause is as well applicable to the other RCC constructions.

14.1.2. Concrete shall conform to the requirements mentioned in IS: 456 and all the tests shall be conducted as per relevant Indian Standard Codes as mentioned in Standard field quality plan appended with the specification. A minimum grade of M25 concrete shall be used for all structural/load bearing members as per latest IS: 456 (latest revision).

14.1.3. If the site is sloppy, the foundation height will be adjusted to maintain the exact level of the top of structures to compensate such slopes.

14.1.4. The switchyard foundation's plinths shall be minimum 300mm above finished yard level.

14.1.5. Minimum 100mm thick lean concrete (1:4:8) shall be provided below all underground structures, foundations, trenches etc. to provide a base for construction.

14.1.6. Concrete made with Ordinary Portland cement shall be carefully cured and special importance shall be given during the placing of concrete and removal of shuttering.

14.1.7. The design and detailing of foundations shall be done based on the approved soil data and sub-soil conditions as well as for all possible critical loads and the combinations thereof. The Spread footing or pile foundation as may be required based on soil/sub-soil conditions and superimposed loads shall be provided.

14.1.8. If pile foundations are adopted, the same shall be cast-in-situ driven/bored or precast or under reamed type as per relevant. parts of IS Code 2911. Only RCC piles shall be provided. Suitability of the adopted pile foundations shall be justified by way of full design calculations. Detailed design calculations shall be submitted by the bidder showing complete details of piles/pile groups proposed to be used. Necessary initial load test shall also be carried out by the bidder at their cost to establish the piles design capacity. Only after the design capacities of piles have been established, the Contractor shall take up the job of piling. Routine tests for the piles shall also be conducted. All the work (design & testing) shall be planned in such a way that these shall not cause any delay in project completion. The contractor shall go for vertical load testing or lateral load testing. The contractor may choose static or dynamic load testing upon site condition and time constraint.

14.2. Design

14.2.1. All foundation shall be of reinforced cement concrete. The design and construction of RCC structures shall be carried out as per IS: 456 and minimum grade of concrete shall be M-25.

14.2.2. Limit state method of design shall be adopted unless specified otherwise in the specification.

14.2.3. For detailing of reinforcement IS: 2502 and SP: 16 shall be followed. TMT bars conforming to IS: 1786 shall be used as reinforcement. However, in specific areas mild steel (Grade I) conforming to IS: 432 can also be used. Two layers of reinforcement (on inner and outer face) shall be provided for wall & slab sections having thickness of 125 mm and above. For footings minimum cover shall be 50 mm.

14.2.4. RCC water retaining structures like storage tanks, etc. shall be designed as uncracked section in accordance with IS: 3370 (Part I to IV) by working stress method. However, water channels shall be designed as cracked section with limited steel stresses as per IS: 3370 (Part I to IV) by working stress method. Joints on each concrete lift shall be provided with approved quality PVC water stops of approx. 230 x 5 mm size to avoid water seepage through those joints

14.2.5. The procedure used for the design of the foundations shall be the most critical loading combination of the steel structure and or equipment and/or superstructure and other conditions, which produces the maximum stresses in the foundation or the foundation component and as per the relevant IS Codes of foundation design. Detailed design calculations shall be submitted by the bidder showing complete details of piles/pile groups proposed to be used.

14.2.6. Design shall consider any sub-soil water pressure that may be encountered following relevant standard strictly.

14.2.7. Necessary protection to the foundation work. If required shall be provided to take care of any special requirements for aggressive alkaline soil. Black cotton soil or any other type of

soil which is detrimental / harmful to the concrete foundations.

14.2.8. RCC columns shall be provided with rigid connection at the base. All columns shall be interconnected with RCC beams at Footing Level from all possible Directions/Suitable size raft footing will be provided.

14.2.9. All sub-structures shall be checked for sliding and overturning stability during both construction and operating conditions for various combinations of loads. Factor of safety for these cases shall be taken as mentioned in relevant IS Codes as stipulated elsewhere in the Specifications. For checking against overturning, weight of soil vertically above footing shall be taken and inverted frustum of pyramid of earth on the foundation should not be considered.

14.2.10. Earth pressure for all underground structures shall be calculated using coefficient of earth pressure at rest. Co-efficient of active or passive earth pressure (whichever is applicable). However, for the design of substructures of any underground enclosures, earth pressure at rest shall be considered.

14.2.11. In addition to earth pressure and ground water pressure etc., a surcharge load of 2T/Sq.m shall also be considered for the design of all underground structures including channels, sumps, tanks, trenches, and substructure of any underground hollow enclosure etc, for the vehicular traffic in the vicinity of the structure.

14.2.12. Following conditions shall be considered for the design of water tank in pumps house, channels, sumps, trenches and other underground structures:

a) Full water pressure from inside and no earth pressure, ground water pressure & surcharge pressure from outside (application only to structures, which are liable to be filled up with water or any other liquid).

b) Full earth pressure, surcharge pressure and ground water pressure from outside and no water pressure from inside.

c) Design shall also be checked against buoyancy due to the ground water during construction and maintenance stages. Minimum factor of safety of 1.5 against buoyancy shall be ensured ignoring the superimposed loadings.

14.2.13. Base slab of any underground enclosure shall also be designed for empty condition during construction and maintenance stages with maximum groundwater table (GWT). Minimum factor of safety of 1.5 against buoyancy shall be ensured ignoring the super-imposed loadings.

14.2.14. Base slab of any underground enclosure like water storage tank shall also be designed for the condition of different combination of pump sumps being empty during maintenance stages with maximum GWT. Intermediate dividing piers of such enclosures shall be designed considering water in one pump sump only and the other pumps sump being empty for maintenance.

14.2.15. The foundations shall be proportioned so that the estimated total and differential movements of the foundations are not greater than the movements that the structure or equipment is designed to accommodate.

14.2.16. The foundations of transformer shall be of block type foundation. Minimum reinforcement shall be governed by IS: 2974 and IS: 456.

14.2.17. The equipment foundations shall be checked for a factor of safety of 2.2 for normal condition and 1.65 for short circuit condition against sliding, overturning and pullout. The same factors shall be used as partial safety factor over loads in limit state design also.

14.3. Admixture & Additives

14.3.1. Only approved admixtures shall be used in the concrete for the Works. When more than one admixture is to be used, each admixture shall be batched in its own batch and added to the mixing water separately before discharging into the mixer. Admixtures shall be delivered in suitably labeled containers to enable identification.

14.3.2. Admixtures in concrete shall conform to IS: 9103. The waterproofing cement additives shall conform to IS: 2645. Owner shall approve concrete Admixtures/ Additives.

14.3.3. The contractor may propose and the Owner may improve the use of a water-reducing set-retarding admixture in some of the concrete. The use of such an admixture will not be approved to overcome problems associated with inadequate concrete plant capacity or improperly planned placing operation sand shall only be approved as an aid to overcoming unusual circumstances and placing conditions.

14.3.4. The water-reducing set-retarding admixture shall be an approved brand of Ligno-sulphonate type admixture.

14.3.5. The waterproofing cement additives shall be used as required/advised by the Owner.

14.3.6. Water proofing treatment on roof shall be as per Item No 22.7.1 - DSR 2012.

15.0 FENCING OF SUB-STATION (LIVE PART) AREA

15.1. General

Fencing shall be designed for the most critical loading combination taking care of wind force, stability, tension on wires, minimum requirements as per this clause for are materials IS 8910 and fabrication IS 800 as per recommendations

15.2. Areas Requiring Fencing

15.3. Fencing shall be providing for the following areas:

15.3.1. Site fencing for the complete Outdoor substation Yard area including Power transformer area. Gates shall be provided for men and machine / equipment to be taken out of the substation.

15.3.2. The IRC weld mesh Panels fencing of Capacitor Bank with roof cover (as per approved BRPL pattern).

15.3.3. Fencing of Aux. Substation Transformer (as per approved BRPL pattern).

15.4. Product Material

15.4.1. The minimum requirements are as follows:
IRC Weld Mesh fencing in accordance to relevant IS Code

• Size of IRC mesh	25X75mm
• Nominal wire size	6 gauge/ 7.75 kg/m2
• Width of fencing panel	2400mm
• Height of fencing	2000mm
• Fabrication of panels	40mm Nominal bore M.S. Pipe (medium duty). Providing elbow/bend at corners & 40 x 5 mm M.S. flats in beading
• Paint	Aluminum Paint

15.4.2. Posts

• Intermediate Straining Post	: 65mm Nominal bore, M.S. Pipe (Medium duty)
• Base Plate	: 12mm M.S. Plate with 4 nos of hole. Nuts & bolts of suitable diameter.
• Paint	: shall be painted with a coat of approved steel primer and two coats of synthetic enamel paint

The IRC weld mesh Panels shall be fixed to the post at the top and bottom of the 65mm Nominal bore, M.S. Pipe by Nuts and bolts. The Intermediate straining Posts to be erected by using holding down bolts and nuts grouted in toe wall around the Yard (the height of Yard) Posts shall be set in 1:1.5:3 Reinforced cement concrete blocks of minimum dimension (340 mm x 340 mm x 750 mm deep) and Toe wall to be at least 450 mm below & 450 mm above the yard level and 340 mm wide matched with External facade of the building(Grit-wash).

15.5. Installation

15.5.1. Fence shall be installed along switchyard line.

15.5.2. Post holes shall be excavated by approved methods.

15.5.3. Intermediate posts shall be spaced 2.5 m apart measured parallel to ground surface.

15.5.4. Concrete work shall conform to relevant clause. Post shall be braced and held in plumb position and true alignment and elevation until concrete has set.

15.5.5. Fence fabric shall not be installed until concrete has cured a minimum of 7 days.

15.5.6. Bottom and top of the fence panels shall be fixed with post by MS flats of 50 mm x 6 mm (min).

15.6. Toe wall of Brick masonry, 345 mm thk, with notches over 100 mm thick PCC (1:4:8) shall be provided below all fencing and shall be minimum 450 mm above and 450 mm below finished ground level. All exposed surfaces of brick toe wall shall be finished with Grit plaster/Matched with Building façade.

15.7. M.S. Gate

15.7.1. M.S. Gate of 6.0 m wide x 2.3 m height (2 nos) and 1.55 m x 2.3 m height (1 no) shall be provided to provide access through the fencing to the yard. M.S. Gate of 6.0 m wide x 2.3 m height shall be made in two leaf and 1.55 m x 2.3 m height shall be made in one leaf with locking arrangements. The gate shall be made with outer frame of 40 NB (Medium) M. S. Pipe. Weld mesh of opening size 25 x 75 mm and nominal wire size of mesh is 6 gauge/ 7.75 kg/m2 (as per standard approved drawing of BSES).

15.7.2. Hinges, al-drops and other accessories shall be provided for effective working of the gate.

16.0 GATES

16.1. The gates shall be fabricated with welded joints to achieve rigid connections. The gate frames shall be painted with one or more coat of approved steel primmer and two coats of synthetic enamel paint.

16.2. Gates shall be fitted with approved quality iron hinges. Hinges shall permit gates to swing through 180 degree.

16.3. Gates shall be fitted with galvanized chain hook or gate hold back to hold gates open. Double gates shall be fitted with centre rest and drop bolt to secure gates in closed position.

16.4. Main Gate shall be at least 6m wide. Gates shall be installed in locations shown on drawings. Next to the main gate, a small gate (1.25 m wide, single leaf) within main gate shall also be provided as a wicket gate.

16.5. Bottom of main gates (both at entry and exit) shall be set approximately 40mm above ground surface with necessary guiding mechanism i.e., wheels at bottom along with a track allowing its smooth movement on floor shall be fitted as per site requirement.

16.6. The gates shall be provided with suitable locking arrangement.

17.0 MISCELLANEOUS GENERAL REQUIREMENTS

17.1. Dense concrete with controlled water cement ratio as per IS-code shall be used for all underground concrete structures such as pump-house, tanks, water retaining structures, cable and pipe trenches etc. for achieving water tightness.

17.2. All joints including construction and expansion joints for the water retaining structures shall be made water tight by using PVC ribbed water stops with central bulb. However, kicker type (externally placed) PVC water stops shall be used for the base slab and in other areas where it is required to facilitate concreting. The minimum thickness of PVC water stops shall be 5 mm and minimum width shall be 230 mm.

17.3. All mild steel parts used in the water retaining structures shall be hot-double dip galvanized. The

minimum coating of the zinc shall be 610 gm/sqm. for galvanized structures and shall comply with IS:2629 and IS:2633. Galvanizing shall be checked and tested in accordance with IS:2633. The galvanizing shall be followed by the application of an etching primer and dipping in black bitumen in accordance with IS:3416.

17.4. A screed concrete layer not less than 100 mm thick and of grade not weaker than M10 conforming to IS: 456 shall be provided below all water retaining structures. A sliding layer of bitumen paper or craft paper shall be provided over the screed layer to destroy the bond between the screed and the base slab concrete of the water retaining structures.

17.5. Bricks having minimum 100 kg/cm2 compressive strength can only be used for masonry work. Contractor shall ascertain himself at site regarding the availability of bricks of minimum 100 kg/cm2 compressive strength before submitting his offer.

17.6. Doors and windows on external walls of the building (other than areas provided, with insulated metal claddings) shall be provided with RCC sunshade over the openings with 150 mm projection on either side of the openings. Projection of sunshade from the wall shall be minimum 600mm over window & door openings.

17.7. RCC staircase shall be provided for access to roof of the building. All stairs shall have maximum riser height of 150 mm and a minimum tread width of 300 mm Minimum width of stairs shall be 1500 mm. Steel doors shall be provided in the Mumty and height of Mumty should be at least 2.6m.

17.8. Angles 50x50x6 mm (minimum) with lugs shall be provided for edge protection all round cut outs/openings in floor slab, edges of drains supporting covers, edges of RCC cable/pipe trenches supporting covers, edges of manholes supporting covers, supporting edges of manhole precast cover and any other place where breakage of comers of concrete is expected.

17.9. Anti termite chemical treatment shall be given to column pits, wall trenches, foundations of buildings, filling below the floors etc. as per IS: 6313 and other relevant Indian Standards.

17.10. All reinforcement in RCC structures and structural steel members shall be of make TATA/ SAIL/ JSW.

17.11. The railing of staircase shall be 0.9 m average height comprising of stainless steel (Grade 304) Jindal Make member minimum 3 mm thick made of Hollow tubes, channels, plates etc., including welding, grinding, buffing, polishing and making curvature (wherever required) and fitting the same with necessary stainless steel nuts and bolts complete, i/c fixing the railing with necessary accessories & stainless steel dash fasteners , stainless steel bolts etc., of required size, on the top of the floor or the side of waist slab with suitable arrangement as per approval of Engineer-in-charge.

17.12. Loading/Unloading Platform stainless steel (Grade 304) Jindal make Balcony Railing hollow pipe 80x40x3 mm hand rail, horizontal pipes 40x20x3 mm .

17.13. All underground water retaining concrete structures shall have water proofing cement Plaster additive conforming to IS: 2645 water proofing for walls and base slab of all underground concrete structures like basements pump houses etc. shall be by "Injection Method".

17.14. All buildings shall have 750mm wide plinth protection all round.

17.15. Providing Fixing of Granite (Tan brown shade) to all Periphery of s/stn building 1000 mm above from Road level to give aesthetical look as per EIC shall be in scope of vendor.

17.16. Monorails, Monorail girders and fixtures shall be provided by the Bidder wherever required.

17.17. All foundations embedment, inserts, blockouts required for equipments shall be provided by bidder.

17.18. 50mm thick DPC shall be provided before laying of masonry (item no. 4.11 & 4.13-DSR 2012).

17.19. BSES Display board is to be provided of required size (3.0mx1.20m) and as per approved pattern /drawing of BRPL with name of the grid- ACP sheet signage with reverse 2D matter with LED Module Light having Automatic Timer on & off System.

17.20. Water and Sewer line connections to be done along with approval of CIVIC agency.

17.21. The details given in tender drawings shall be considered along with details available in this section of the specification while deciding various components of the building.

17.22. Balance Plot area should be covered with CC pavement/Pavers as per EIC

Items/components of buildings not explicitly covered in the specification but required for completion of the project shall be deemed to be included in the scope

18.0 INTERFACING

The proper coordination & execution of all interfacing civil works activities like fixing of conduits in roofs/walls/floors, fixing of lighting fixtures, fixing of supports/ embedments, provision of cutouts etc for indoor illumination, ventilation & Air conditioning shall be the sole responsibility of the Contractor. He shall plan all such activities in advance and execute in such a manner that interfacing activities do not become bottlenecks and dismantling, breakage etc. is reduced to minimum

19.0 FIELD QUALITY PLAN FOR CIVIL WORKS

The field quality plan for all civil works shall be in accordance with CPWD specification and other relevant Indian Standard Codes. All quality checks and procedures shall be followed as per relevant CPWD norms.

20.0 WATER SUPPLY

20.1. Water for construction work as well as drinking purpose shall be in the scope of Contractor.

20.2. The Contractor shall carry out all the plumbing/erection works required for supply of water in control room building.

20.3. A scheme shall be prepared by the Contractor indicating the layout and details of water supply which shall be got approved from the Owner before actual start of' work including all other incidental items not shown or specified but as may be required for complete performance of the works.

20.4. Either Bore-well or Connection from respective owners/DJB water source along with required pumps for water supply shall be in the scope of contractor. Although contractor shall provide an underground

water reservoir, near the gate of minimum 20 M3 or sufficient capacity for refill of one fire Tanker. The water reservoir shall be provided with a high-pressure pump and single point fire hydrant outlet for refilling the fire tender in case of fire and emergency with proper waterproofing treatment & ceramic tiles finish on walls & Floor. Necessary valve shall be provided in the outlet.

20.5. The details of tanks, pipes, fittings, fixtures etc for water supply shall be approved by engineer in charge.

21.0 SEWERAGE SYSTEM

21.1. Sewerage system shall be provided for control room building.

21.2. The Contractor shall construct septic tank and soak pit suitable for 20 users or make connection with nearby existing sewerage system of Civic agencies/respective owners.

21.3. The system shall be designed as per relevant IS Codes.

21.4. External sewerage system including connection with internal services of building shall be within the scope of this contract. The connection and laying of sewer lines and manholes upto the point of connection with the sewer line of local civic agency if existing within 100m from any point of boundary of sub-station. If the sewer line of local civic agency does not exist in the area then septic tank with soak pit shall be constructed for control room building (suitable for 20 users). Vendor shall obtain necessary approval from civic agency for laying of sewer lines as aforesaid and connection thereof. Any municipal charges for approval and connection shall be paid by BRPL directly to the local authorities.

22.0 RAIN WATER HARVESTING

(a) Providing two recharge structures with bore wells at different locations as per approved drawing for rainwater harvesting system. The recharge structures shall be suitably located within the sub-station. Branch drains from the main drain carrying rainwater from entire switchyard, constructed in accordance with clause 9 & 10 shall be connected to the recharge structures.

(b) The internal dimensions of recharge shafts shall be 3.0 m X 2.5 m with 230mm thick lining of brick work upto a depth of 2.0 meter from Finished Ground level and 345mm thick brickwork below 2.0 meter depth. The brickwork shall be constructed with cement mortar 1:6 (1cement: 6 coarse sand). The overall depth of shaft shall be 3.0 meter below invert level of drain. The shaft shall be covered with RCC slab for a live load of 300 kg. per sqm. Two openings of size 0.7 x 0.7 meter shall be provided in the RCC cover slab. An iron cover made of 5mm thick chequered plate with hinges shall be provided on the openings. Galvanized M.S. rungs of 16mm diameter at spacing of 300 mm shall be provided in the wall of shaft below the opening in the RCC slab to facilitate cleaning of shaft.

(c) A 300 mm diameter bore well shall be drilled in the centre of the shaft. The depth of bore well shall be 5.0 meter more than the depth of sub soil water.

(d) A 100 mm diameter medium duty MS pipe conforming to IS: 1161 shall be lowered in the bore well keeping bail plug towards bottom of bore well. The pipe shall have 1.58mm holes for 4.0 meter length starting from 1.0 meter from bottom of bore well. Holes of 3.0mm diameter shall be provided for a length of 2.0 meter starting from the bottom level of coarse sand and down wards.

The overall length of pipe shall be equal to total depth of bore well plus depth of shaft.

(e) Gravel of size 3mm to 6mm shall be filled around 100 diameter MS pipe in the bore well. The shaft shall be filled with 500 mm thick layers each from the bottom of shaft with boulders of size 50mm to 150mm, gravel of size 5mm to 10mm, coarse sand having particle size 1.5mm to 2.0mm and boulders of size not less than 200mm respectively.

(f) Drawing based on above details of recharge structure for rainwater harvesting has to be prepared by contractor and to be approved from engineer in charge.

23.0 STATUTORY RULES

23.1. Contractor shall comply with all the applicable statutory rules pertaining to factories act (as applicable far the State), Fire Safety Rules of Tariff Advisory Committee. Water Act for pollution control, Energy Conservation Act, etc.

23.2. Provisions for fire proof doors, no. of staircases, fire separation wall, plastering on structural members (in fire prone areas) etc. shall be made according to the recommendations of Tariff Advisory Committee.

23.3. Statutory clearance and norms of State Pollution Control Board shall be followed as per Water Act for effluent quality from plant.

23.4. Foundation system adopted by Bidder shall ensure that relative settlement and other criteria shall be as per provision in IS: 1904 and other Indian Standards.

23.5. All water retaining structures designed as uncracked section shall also be tested for water tightness at full water level in accordance with clause no. 10 of IS :3370 (Part-I).

23.6. Construction joints shall be as per IS: 456.

23.7. All underground concrete structures like basements, pumps houses, water retaining structures etc. shall have plasticizer cum water proofing cement plaster additive conforming to 1S:9103. In addition, limit on permeability as given in 1S:2645 shall also be met with. The concrete surface of these structures in contact with earth shall also be provided with two coat of bituminous painting for water/damp proofing. In case of water leakage in the above structures, Injection Method shall be applied for repairing the leakage.

23.8. All building/construction materials shall conform to the best quality specified in CPWD specifications if not otherwise mentioned in this specification.

23.9. All tests as required in the standard field quality plans of CPWD or as per sound engineering practices have to be carried out.

23.10. The type and treatment of all foundation shall be as per recommendation of geo-technical investigation reports.

24.0 TESTS FOR MATERIAL / WORKMANSHIP

All tests required for various bought out items, materials, quality of workmanship or any other tests as desired by Project Manager and as specified in technical specification shall be carried out by the

Bidder at his own cost in the presence of the authorized representative of the Engineer.

The quality assurance check lists are given at the end of respective chapters / sections of these specifications. The Bidder shall submit comprehensive Quality Assurance plan for all materials, equipment, workmanship, services etc. and get it approved from the Engineer. This shall include setting up a test laboratory at site. However, such check list shall in no way limit the liability and responsibility of the Bidder in regard to quality of workmanship as detailed out in the specifications.

The sampling & testing of the construction materials shall be in accordance to latest CPWD Specifications related to all activities of the building and other civil construction works.

25.0 DRAWINGS

The successful Bidder shall first submit the structural design calculations along with general arrangement drawings for approval. After the approval of the design calculations by the owner detailed construction drawings shall be prepared and submitted for Employer's approval along with revised design calculations if required within 15 days. Required number of sets of design calculations, drawings and documents shall be submitted by the Bidder.

BOQ, Calculations and other documents etc. shall be on A4 size paper. All the drawings shall be drawn to the scale as far as possible on A1 size or larger size paper and should be legible. The submission shall be

- Three (03) Sets of approved and released for construction drawings/BOQ/Calculation for Owners reference.
- Six (06) Sets of final As Built drawings, design, BOQ, Calculation & O&M manual for all equipments supplied.
- Soft copies of all drawings/Documents/calculation in Auto CAD and Microsoft office file format as applicable.

Drawings shall be treated as submitted, only if provided with BOQ (If applicable). Transmittal sheet shall be mandatory to attach with all the drawing and documents. Format for transmittal shall be provided to successful bidder for drawing approvals etc.

26.0 ALTERATION IN SPECIFICATION AND DESIGN

The Project Manager shall have the power to make any alteration and omissions from, additions to or substitution for the original specifications, drawings, designs and instructions that may appear to him to be necessary during the progress of the work and the Bidder shall carry out the work in accordance with any instruction which may be given to him in writing signed by the Project Manager and such alterations, omissions, additions or substitutions shall not invalidate the contract and any altered, added or substituted work which the Bidder may be directed to do in the manner above specified as part of the work shall be carried out by the Bidder on the same conditions in all respects on which the Bidder agreed to do the original contract work. The time for completion of work shall be altered in the proportion that the altered, added or substituted work bears to the original contract work and the certificate of the Project Manager shall be conclusive as to such proportion.

The rates for the altered items of work shall be worked out on the following basis and necessary

alternations in the total amount shall be made on that basis:

(a) The rates to be reimbursed or recovered shall be taken as same as those given in CPWD-DSR (2021) for those items for which the rates are available in CPWD - DSR (2021).

(b) Rates for the items not covered under CPWD - DSR (2021) shall be derived from the rates of similar items of CPWD schedule of rates.

(c) In the event there is no similar class of work specified in the CPWD - DSR (2021), the Bidder shall work on a rate for such an item on the basis of the prevalent market rates for materials / men / machines and submit the same together with the detailed analysis to the Project Manager within 7 days. The Project Manager shall thereafter review the correctness and then conduct necessary negotiations with the Bidder to arrive at a mutually agreeable rate. Engineer's decision in regard to rates of such items shall be final and binding on the Bidder.

In case of conflict between this chapter and other Chapters of Technical Specifications, provisions given in this chapter shall govern.

\

Table 1- Finishing Schedule

No	Location	Flooring	Wall Internal	Ceiling	Doors, Windows, Ventilators
1	Control room	52 mm thick CC flooring with concrete hardener topping & Dust proof Epoxy Paint & False Flooring as per specification clause No-6.5.1	Plastic emulsion Paint on smooth surface applied with putty	Oil bound washable distemper on smooth surface applied with putty to RCC Ceiling & P/F of False ceiling approved by EIC as per specification clause no. 6.9	Doors: 02 hours fire rated doors as per clause no. 6.10.b Windows & Ventilators: Aluminium Windows & Ventilators As per clause no. 6.10.c
2	Office rooms, maintenance room, Reception Lobby/ Passage, staircase area/ outdoor steps	Granite Flooring	Plastic emulsion Paint on smooth surface applied with putty	Oil bound washable distemper on smooth surface applied with putty	Doors: Steel door as per clause no. 6.10.a Windows & Ventilators: Aluminium Windows & Ventilators As per clause no. 6.10.c
3	Toilet	Anti skid Ceramic tiles with white cement.	Ceramic glazed tile for toilet, for pantry above working platform up to 750 mm.	Oil bound washable distemper on smooth surface applied with putty	Doors, Windows & Ventilators: Aluminium Doors, Windows & Ventilators As per clause no. 6.10.c
4	Cellar	52 mm thick CC flooring with concrete hardener topping	Plastic emulsion Paint on smooth surface applied with putty	Oil bound washable distemper on smooth surface applied with putty	Doors: Steel door as per clause no. 6.10.a Windows & Ventilators: Aluminium Windows & Ventilators As per clause no. 6.10.c
5	Other areas not specified	Double charged Vitrified tile of size 600x600mm of make Kajaria or equivalent	Plastic emulsion Paint on smooth surface applied with putty	Oil bound washable distemper on smooth surface applied with putty	Doors: Steel door as per clause no. 6.10.a Windows & Ventilators: Aluminium Windows & Ventilators As per clause no. 6.10.c

6	Switchgear Room/GIS Room	Self leveling Epoxy flooring 2mm thick after application of 2mm thick screed over 52 mm thick CC flooring with concrete hardener topping	Plastic emulsion Paint on smooth surface applied with putty	Oil bound washable distemper on smooth surface applied with putty	Doors: 02 hours fire rated doors as per clause no. 6.10.b Windows & Ventilators: Aluminium Windows & Ventilators As per clause no. 6.10.c
8	All external surfaces (S/stn building, boundary wall and other structures) shall have Texture finish of Make UTTPL (Ultratech Texture Paints Pvt. LTD) The texture finish and shade as approved by BRPL.				

Technical Specification

For

66 kV Gas Insulated Switchgear

Specification no – BSES-TS-84-66GIS-R0

Rev:		0
Page		1 of 39
Date:		11 May 2022
Prepared by	Abhishek Harsh	
	Javed Ahmed	
Reviewed by	Srinivas Gopu	
	Abhinav Srivastava	
Approved by	Gaurav Sharma	
	Gopal Nariya	

12/5/2022

INDEX

1.0 SCOPE 3
2.0 CODES & STANDARDS 3
3.0 SERVICE CONDITIONS 4
4.0 ELECTRICAL SYSTEM 4
5.0 SWITCHGEAR 5
6.0 LOCAL CONTROL CABINET 10
7.0 CIRCUIT BREAKER & THREE POSITION DISCONNECTOR 12
8.0 FUNCTIONAL REQUIREMENTS 13
9.0 BUSBARS 14
10.0 EARTHING 15
11.0 SURGE SUPPRESSOR 16
12.0 CURRENT TRANSFORMER 16
13.0 VOLTAGE TRANSFORMER 16
14.0 CABLE TERMINATION 17
15.0 METERS 17
16.0 MULTIFUNCTION METER 17
17.0 INDICATIONS & ALARMS 18
18.0 SELECTOR SWITCHES & PUSH BUTTONS 18
19.0 INTERNAL WIRING 19
20.0 TERMINAL BLOCKS 19
21.0 SPACE HEATERS, SOCKETS & ILLUMINATION LAMPS 20
22.0 NAMEPLATES AND MARKING 20
23.0 MIMIC, LABEL AND FINISH 21
24.0 APPROVED MAKES OF COMPONENTS 22
25.0 INSPECTION AND TESTING 23
26.0 DEVIATIONS 27
27.0 GTP 27
28.0 DRAWINGS & DATA SUBMISSION MATRIX 27
29.0 PACKING 28
30.0 SHIPPING 29
31.0 HANDLING AND STORAGE 29
32.0 ACCESSORIES 29
33.0 SPARES 30
34.0 ANNEXURE – A – TECHNICAL PARTICULARS 31
35.0 ANNEXURE-B- SLDS 36

DocUUID : ef633536-12e1-468c-ba98-703264fe0eb1

1.0 SCOPE

1.1 This specification covers the design, manufacture, testing, supply, erection & commissioning of 66kV, Gas Insulated (GIS), GIS bay module, connecting flanges, support structure, GIS ducts, SF6/Air Bushing, gas monitoring devices, barriers, pressure switches etc. Metal enclosed and factory assembled switchgear for BSES Rajdhani/Yamuna Power Ltd at Delhi.

1.2 This specification shall be used in conjunction with all specifications, switchgear data sheet, 66kV switchgear single line diagram and other drawing attached to the specification / Purchase requisition.

1.3 Special attention shall be given to an optimized GIS design with minimum space requirements. The contractor shall propose as part of this contract with the layout design of the GIS building to ensure that the most suitable arrangement is obtained for housing, supporting and fixing of the GIS. The bidder shall also provide a complete floor plan detailing the fixing points, size of foundation, required cable trenches, wall openings, doors, transport ways and lay down areas. All static and dynamic loads plus dimensional tolerances shall be given on these drawings to enable the civil works design to be optimized.

1.4 Supplier shall furnish all material, necessary hardware's, special tools for installation and maintenance, drawings and instructions for the constructions of the complete and ready to operate GIS.

2.0 CODES & STANDARDS

- Materials, equipment and methods used in the manufacture of switchboards shall conform to the latest edition of following –

2.1	Indian Electricity Rules 1956	
2.2	Switchgear and control gear	IEC : 60694, IEC: 60298, IEC : 62271, IEC : 60529, IS: 3427, IS: 12729, IS: 12063, IS: 13947, IS: 9046
2.3	Circuit breaker	IEC 62271 - 100, IS 13118, IS 2516
2.4	Alternating current disconnectors. Bus-transfer current switching by disconnectors.	IEC 61128
2.5	Alternating current earthing switches	IEC 61129
2.6	Isolators & earthing switches	IEC 62271 - 102
2.7	Current transformers	IS:2705, IEC 66044-1
2.8	Voltage transformer	IS:3156, IEC 66044-2
2.9	Cable connections for gas insulated switchgear	IEC 60859
2.10	New sulphur hexafluoride	IEC 60376
2.11	Non-linear resistor type arresters for AC systems	IEC 60099-1/4
2.12	Bushings for alternating voltages above 1000 V	IEC 60137
2.13	Factory-built assemblies of low-voltage switchgear and control gear.	IEC 60439
2.14	Indicating Instruments	IS:1248
2.15	Energy meters	IS 13010

DocUUID : ef633536-12e1-468c-ba98-703264fe0eb1

2.16	Relays	IS:8686, IS:3231, IS:3842
2.17	Control switches and push buttons	IS 6875
2.18	Arrangement of Switchgear bus bars, main connections and auxiliary wiring	IS:375
2.19	Code of practice for phosphating iron & steel	IS 6005
2.20	Colours for ready mixed paints	IS 5
2.21	Code of practice for installation and maintenance of switchgear	IS 3072

3.0 SERVICE CONDITIONS

3.1	Location	Indoor
3.2	Average grade atmosphere	Heavily polluted, Dry
3.3	Maximum altitude above sea level	1000M
3.4	Ambient air temperature	Highest 50^0C Average 40^0 C
3.5	Minimum ambient air temperature	0^0C
3.6	Relative Humidity	100%
3.7	Rainfall	750mm concentrated in four months
3.8	Seismic Zone	IV

4.0 ELECTRICAL SYSTEM

4.1	Type	Switchgear Shall be 66 kV, 3 Phase, 3 wire, 50 Hz
4.2	Earthing type	Solidly Earth
4.3	Fault Current	31.5 kA for 3 sec
4.4	Maximum Ambient Temperature	45^0 C
4.5	Minimum Ambient Temperature	0^0 C
4.6	Design Ambient Temperature	50^0 C
4.7	Relative Humidity	100%
4.8	Rating	As per Annexure –A / Tender SLD

DocUUID : ef633536-12e1-468c-ba98-703264fe0eb1

5.0 SWITCHGEAR

5.1	Structural Requirements	Switchgear shall be metal-clad cubicle design with double bus bar system having three phase common enclosure concept, in accordance with tender requirement. Refer Tender SLD/Annexure-A for details. Each bay shall be metal enclosed, free standing, floor mounting, flush fronted and arranged to form a single structure with a common bus bar assembly. Construction, including cable entry, shall be vermin proof.
5.2	Enclosure	The metal enclosures for the SF6 gas insulated equipment modules shall be made from Aluminum alloy. Suitable anti-corrosive paints must be applied on the exterior of the enclosures. The enclosure shall be suitable for three phases, i.e. Single Enclosure. The external fixtures should be made of corrosion resistant material and should be capped where required. Bellow compensators shall be made of Stainless steel to preserve the mechanical strength of the equipment at the connection portions to deal with the following problems: a. Expansion and Contraction of outer enclosure and conductor due to temperature variations. b. Mismatch in various components of GIS c. Vibration of the transformer and switching equipment d. Dimensional variations due to uneven settling of foundation e. Seismic forces as mentioned in climatic condition.
5.3	Compartments	f. Switchgear should be completely partitioned from bay to bay. Also, each bay should have separate compartments for the following- ➢ Busbars ➢ Circuit breakers ➢ Disconnectors ➢ Incoming/Outgoing power cables ➢ Local control cabinet g. The bus bars shall be further sub-divided into compartments including the associated bus bar disconnector. h. Sectionalisation shall ensure that circuit breaker enclosure will not include any other equipment in its gas compartment.
5.4	High Voltage Compartments	All high voltage parts shall be metal enclosed and filled with SF6 gas. Gas leakage rate for all gas filled compartments should be less than 0.5 % per annum. Bidder shall specify the type, quantity and operating pressure for all gas filled compartments or equipment. Degree of protection for HV compartment should be IP65.

DocUUID : ef633536-12e1-468c-ba98-703264fe0eb1

5.5	Gas sections	Each section shall be provided with necessary valves to allow evacuation and refill of gas without evacuation of any other section. Location of gas barrier insulators is to be clearly discriminated outside the enclosure by a band of distinct colour normally used for safety purposes. The gas system proposed shall be shown on a "gas single line diagram" and submitted with the technical bid and in the event of an order for approval. It should include the necessary valves, connections, density monitors, gas monitor system and controls, indication, orifices, and isolation to prevent current circulation. Means of calibrating density monitors without de-energizing the equipment should be specified by the supplier. For the purpose of gas monitoring and maintenance, the GIS shall be divided into various individual zones in each bay. The CB gas zone shall be independent from all other gas compartments and shall meet the requirement of relevant IEC.
5.5.1	Pressure Indicators	a. A pressure indicator shall be provided for each gas filled compartment with three stage alert i.e alarm, lockout and overpressure. b. Alarm stage shall be set appropriately to alert the operator of the reduction in gas pressure. c. Lockout stage shall be set to avoid any mal-operation in absence of gas pressure. d. Over pressure stage shall be provided to indicate abnormal pressure rise in the gas compartment. e. It shall be possible to test all gas monitoring relays without de-energizing the primary equipment and without reducing pressure in the main section. Disconnecting type plugs and sockets shall be used for test purposes. Pressure/density device shall be suitable for connecting to the male portion of the plug. f. Two potential free electrical changeover contacts shall be provided with each and every alarm condition.
5.6	HV Cable compartment	Each panel shall have an SF6 Gas-insulated cable connection compartment The connection between GIS and high voltage cable at GIS end shall be done through cable termination / cable sealing end. Plug in cable sealing ends for XLPE cables shall consist of gas tight plug in sockets, and prefabricated plugs with grading elements of silicone rubber. The design of the cable end box shall fully comply with the IEC standard. The type and size of cable is specified. All end cable modules shall be suitable for connecting single core, XLPE specified cable. Necessary provision for termination of specified nos. of such power cables shall be made in GIS.
5.7	Conductors	The conductors shall be made of aluminum alloy suitable for specified voltage and current ratings. The electrical connections between the various gas sections shall be made by means of multiple contact connectors (plug-in

DocUUID : ef633536-12e1-468c-ba98-703264fe0eb1

		type) so that electrical connection is automatically achieved when bolting one section to another. Field welding of conductor is not acceptable. The surface of the connector fingers and conductor on such connections shall be silver plated. Both, the conductors as well as the contacts for the conductor connections must be designed for the continuous rated current of the switch gear under the ambient conditions furnished, and shall not exceed the permissible temperature rise.
5.8	Safety from Internal faults	The structure, including doors and panels, shall be capable of withstanding the internal pressures created by faults within the structure (equal to the maximum fault-current rating) without danger to the operating personnel. Type test reports regarding internal arc withstand performance shall be available with bids.
5.8.1	Passive Protection from internal faults	A passive safety section shall ensure that hot gases shall be guided via pressure relief disks from each compartment. The pressure relief duct ends shall be guided to open air or fitted with absorbers to cool the hot gases. Relief into a cable basement or cavity below a false floor is not acceptable. Hazards to persons or risk of fire shall be reliably prevented. An arcing fault in one compartment should not cause damage to other compartments. Structure shall be provided with barriers to prevent the transfer of ionized gases between two adjacent compartments. Separate pressure relief vents shall be provided in bus bar, cable and circuit breaker compartments to release arc fault pressure quickly and safely. The orientation of pressure relief vents and gas exhaust ducts as necessary shall be coordinated during detailed engineering.
5.8.2	Internal arc classification	As per Annexure A
5.9	Tamper proof and Dust resistant	Required
5.10	Workability	Switchgear shall be designed and constructed to facilitate inspection, cleaning, repair and maintenance and to ensure absolute safety during such work. Interlocks, busbar shutters and covers shall be provided to prevent incorrect or unsafe operation and to prevent access to live parts. It shall be possible to work safely within individual panels, such as equipping and commissioning of spare panels as well as connecting main, control and auxiliary cabling, while the remainder of the switchgear is energized.

DocUUID : ef633536-12e1-468c-ba98-703264fe0eb1

5.11	Service continuity	a. Arc faults caused by external reasons shall be positively confined to the originating compartment and shall not spread to other parts of the switchgear. b. In case of any internal arc fault in a busbar, busbar disconnector or circuit breaker, of double bus system, repair works must be possible without shutting down complete substation and at least one busbar and the undisturbed bays must remain in operation. c. For Bus Coupler / sectionaliser - In case of any internal arc fault in a busbar, busbar disconnector or sectionaliser, repair work must be possible without shutting down the complete substation and at least one half of the substation must remain in operation. d. Documents indicating sequence of repair work steps and description of necessary restrictions during work shall be submitted with the technical bid. Each bay module should be equipped with suitable arrangement for easy dismantling and refitting during maintenance without disturbing other units.
5.12	Interchange-ability	Similar parts and components shall be interchangeable wherever practical. An interlock system shall be provided to prevent the interchange of modules with higher current rating with modules of lower current rating. Replacement of circuit breaker module shall be without interfering busbar operation and without gas work.
5.13	Doors and Covers	a. All doors, hinged covers, and hinged panels larger than 0.36 m^2 in area shall open at least 95 degrees and be equipped with doorstops to hold them in the open position. Door swing must allow withdrawable equipment to be withdrawn. All such doors and hinged covers shall be equipped with handles and secured by captive bolts, lockable with a key or pad-lockable. b. Breaker compartment door shall open and close without obstruction with and without rubber mats laid in front of the switchgear. Door of one panel should not cause hindrance for opening of adjacent panel.
5.14	Cover Plates	All cover plates that exceed 0.7 m^2 that require removal for installation or maintenance of the equipment shall be equipped with lifting handles and self-supporting lips. With the exception of the backs of panels cover plates shall not exceed 1.1 m^2 in area or 27 kg in weight, unless they are hinged and bolted or locked. Cover plates shall be secured using captive bolt fixings.

DocUUID : ef633536-12e1-468c-ba98-703264fe0eb1

5.15	Test Facilities	Each panel shall be provided with test facilities to allow for: a. Voltage testing of the primary circuit at rated voltage with all parts connected to the facility b. Current testing of primary circuit (primary injection test) c. Protection testing suitable for continuous operation at maximum current d. Access for test devices shall be clearly identified and covers shall be secured using captive fixings that require the use of a tool for access. Provision shall be included to secure the test devices in the test position.
5.16	Panel Dimension	Operating height maximum 1600mm
5.17	Extensibility	Switch gear shall be capable of extension in the future on either end by the addition of extra feeders, bus couplers, bus-bars, circuit breakers, Disconnectors, and other switch gear components without drilling cutting, welding or dismantling any major part of the equipment. The Vendor is required to demonstrate clearly in his submitted documents the suitability of the switchgear design in this respect. The arrangement shall be such that expansion of the original installation can be accomplished with minimum GIS down time. In case of extension, the interface shall incorporate facilities for installation and testing of extension to limit the part of the existing GIS to be re-tested and to allow for connection to the existing GIS without further dielectric testing.
5.18	Maintenance	a. The positioning of the circuit breaker in the GIS shall be such that it shall be possible to access the circuit breaker of any feeder from the front side for routine inspection, maintenance and repair without interfering with the operation of the adjacent feeders. b. The GIS shall be so designed that any component of the GIS can be removed easily. With minimum flexibility in the layout arrangement it shall be possible to remove the circuit breaker with both busbars remaining in service and it shall be possible to remove the disconnector of the busbars, with one bus bar remaining in service.
5.19	Safety	a. The switch-gear must provide a maximum degree of safety for the operators and others in the vicinity of the switch gear under all normal and fault conditions. The safety clearances of all live parts of the equipment shall be as per relevant standards. b. It must be made impossible to touch any live part of the switch-gear unwillingly i.e. without use of tools or brute force. c. An operator standing in the normal operating position should not be endangered by any moving external part of the switch-gear.

DocUUID : ef633536-12e1-468c-ba98-703264fe0eb1

5.20	Panel Base Frame	Steel Base frame as per manufacturer's standard. Bidder shall provide facilities for bolting the switchgear to its foundation. Such facilities shall be suitable for the specified seismic service.
5.21	Non- tiered construction	Incoming and bus-section units shall be located in non-tiered separate panels.

6.0 LOCAL CONTROL CABINET

6.1	Requirement	One local control cabinet (LCC) shall be supplied for the local control and operation of each bay. Each LCC shall contain the local control, interlocking, operation and indication devices for the associated GIS bay
6.2	Place	The LCC shall be free standing type and shall be mounted in front of each GIS bay. The LCC's shall be located with sufficient space for access and the possibility to work at the equipment even when the LCC doors are open, or directly at the switch-gear in front of the related circuit breaker
6.3	Dimension	Subject to buyer's approval
6.4	Enclosure type	The LCC's shall be designed to ensure that all LCC's are drip and splash proof. The LCC's shall also be dust and vermin proof. LCC shall comply degree of protection class IP-42 according to IEC60529
6.5	Enclosure material	Pre-galvanized, cold-rolled sheet steel of thickness not less than 2.0 mm. Stiffeners shall be provided wherever necessary.
6.6	Doors	Doors shall be provided for easy access of all equipment connections mounted in the LCC. Doors shall have handles with built-in locking facility.
6.7	Gland Plate	At least two separate gland plates of removable type with gasket shall be provided for each panel. They shall be of sheet steel of thickness not less than 3.0 mm.
6.8	Cable Entry	Shall be from the bottom
6.9	Control Circuit	The control and operation circuits shall be well shielded and with safety measures to protect operator from touching energized parts. Power frequency withstand of control circuits shall be 2 kV for 1 minute.
6.10	Gaskets	All doors, removable covers and panels shall be Gasketed all around with neoprene gaskets.
6.11	Ventilating louvers	Ventilating louvers, if required, shall have screens and filters. The screens shall be made of either brass or GI wires mesh.
6.12	Foundation	The panels shall be fixed on the embedded foundation channels with intervening layers anti vibration strips made of shock absorbing materials.

DocUUID : ef633536-12e1-468c-ba98-703264fe0eb1

6.13	Base Frame	Base frames shall be supplied along with panels. 100mm channel painted black.
6.14	Mounting	Equipment on front of panel shall be flush mounted. No equipment shall be mounted on the doors.
6.15	Working level	The centre lines of switches, push buttons and indicating lamps shall not be less than 750mm and higher than 1600mm from panel base. Height of relays, meters and recorders shall not be less than 450 mm from the bottom of the panel.
6.16	Appearance	The centre lines of switches, push buttons and indicating lamps shall be matched to give a neat and uniform appearance. Likewise the top lines of all meters, relays and recorders etc, shall be matched.
6.17	Control and Operation	The LCC should have required arrangement for control and operations of GIS from Remote i.e. from the control room through SCADA as well as SCADA compatible control and protection panel. The LCC shall include all required functions for control and supervision of a complete GIS as well as the marshalling of all connections to and from the GIS bays.
6.18	Switches & Lamps	a. Circuit breaker control switch with ON – OFF indicating lamps. – Circuit breaker “local-remote” selector switch. b. Disconnect switch, control switch with ON – OFF indicating lamps. c. Grounding switch, control switch with ON – OFF indicating lamps. d. Monitoring control of all high voltage switching devices in a bay. e. Any interposing relays and control switches associated with the circuit breakers disconnect switches, grounding switches etc.
6.19	Indication and Alarm	As specified in specification
6.20	Terminal Block	As specified in specification
6.21	Fuses, links and MCBs	These shall be installed in the interior of the LCC’s for protection of respective circuits based on scheme requirement.
6.22	Space heaters, Sockets & Illumination lamps	As specified in specification
6.23	Cable Connections	All cable connections between the various GIS modules and the LCC’s shall be made by prefabricated multi-core cables with multipoint plug in connections on both the ends. PTs & CTs circuit shall be wired with crimped type copper lugs. All cables shall be shielded and adequate for their application (indoor / outdoor). The cables shall be fire retardant low smoke. The length and the number of terminal points of control wiring & SF6 gas connections shall be minimized. The

DocUUID : ef633536-12e1-468c-ba98-703264fe0eb1

		electrical connections between the various gas sections shall preferably be made by means of multiple contact connectors so that electrical connection is automatically achieved when bolting on section to another. The surface of the connector fingers and conductor tubes on such connections shall be silver plated.

7.0 CIRCUIT BREAKER & THREE POSITION DISCONNECTOR

7.1	Circuit Breaker	
7.1.1	Interrupting medium	SF6
7.1.2	Type	Circuit – breakers shall be of single pressure, single break, self-compression self-blast / auto puffer type with SF6 as arc quenching & insulation medium and with a minimum- maintenance contact system
7.1.3	Breaker operation	Three separate identical single pole units operated through a common shaft
7.1.4	Operating Mechanism	Re-strike free, Trip free, with electrical anti-pumping feature
7.1.5	Type	Motor wound, spring charged, stored energy type with manual charging facility
7.1.6	Operation on supply failure	One O-C-O operation possible after failure of power supply to the spring charging motor
7.1.7	Shunt Release	For closing and tripping
7.1.8	Number of Trip coils	Two
7.1.9	Push buttons	a. Manual / mechanical ON/ OFF / Emergency trip push button b. Emergency Off push button should be provided with a protective flap. c. Mechanical ON shall have padlocking facility d. Labels giving clear instructions for manual operation should be provided wherever appropriate
7.1.10	Mechanical Indications	a. On-Off b. Operation counter c. Mechanism charge/discharge
7.1.11	Position detection	Through proximity sensors/Aux Switches
7.1.12	Breaker Control	On panel front only
7.1.13	Technical particulars	As per Annexure-A
7.1.14	Manufacturer/Model No	Vendor Specific
7.1.15	Short Circuit Current	31.5 kA for 3 Sec
7.1.16	Operations	10000 maintenance free operations at rated capacity
7.2	Three position Disconnector	
7.2.1	Functions	Three phase, three position suitable for- a. Connecting b. Disconnecting c. Earthing
7.2.2	Type	Motorized with provision for local and remote operation.

DocUUID : ef633536-12e1-468c-ba98-703264fe0eb1

		Operation of earth switch should be through local only. Provision for Manual operation shall also be there.
7.2.3	Place	For both line side and Bus Side
7.2.4	Position detection	Through proximity sensors/Aux Switches
7.2.5	Mechanical indications	Earthing switch close/open.
7.2.6	Padlocking facility	For locking the earthing device in the open and close position.
7.2.7	Rating	Continuous and Short circuit rating should be same as specified for switchgear.
7.2.8	High speed earthing switch	Required for all bays
7.2.9	On load bus transfer capability	Required for all bays
7.2.10	Maintenance Earthing Switches	Each maintenance-earthing switch shall be electrically interlocked with its associated disconnecting switch and circuit breaker such that it can only be closed if both the circuit breaker and disconnecting switch are open. Once closed it shall be secured against re-opening. Maintenance earthing switch shall be operable locally from the bay module control cabinet only; SCADA operation not required. Each earthing switches shall be provided with 4NO & 4NC auxiliary Switches. Provision shall be made for padlocking the earthing switches in either the open or closed positions.

8.0 FUNCTIONAL REQUIREMENTS

8.1	Interlocking requirements	Mechanical & electrical interlocks must be provided to ensure absolute and reliable protection against potentially harmful Mal-operation of the switchgear. All interlocks that prevent potentially dangerous mal-operations shall be so constructed such that they cannot be defeated easily, i.e. the operator must use tools and/or technique to over-ride them only in case of emergency.

DocUUID : ef633536-12e1-468c-ba98-703264fe0eb1

8.2	Interlock philosophy	a. The operator must be forced in to the only safe and logical sequence to actuate the circuit breakers, disconnectors & earthing switches. b. The actual, completely closed or completely opened position of all switching devices must be checked before and after each move. c. Implementation of logic checks and issuing the resultant signals Enabled or Blocked for the switching device.
8.3	Mechanical and electrical interlock conditions	a. To prevent earthing of an incoming supply which has not been isolated b. To prevent switching on an incoming supply which is earthed c. To prevent earthing of feeder circuit when the circuit breaker is in the closed position d. To prevent switching on a circuit breaker when the feeder is earthed
8.4	Breaker Operation	
8.4.1	Closing from local	Only when local/remote selector switch is in local position
8.4.2	Closing from remote	Only when local/remote selector switch is in remote position
8.4.3	Tripping from local	Only when local/remote selector switch is in local position
8.4.4	Tripping from remote	Only when local/remote selector switch is in remote position
8.4.5	Tripping from protective relays	Irrespective of position of local/remote switch
8.4.6	Trip circuit supervision	To be given for breaker close & open condition
8.4.7	Trip circuit supervision relay contact	For indication, alarm & to inhibit closing of breaker
8.4.8	Emergency trip push button contact	Wired directly to trip coil (wired to Master trip relay if second trip coil provided)
8.4.9	Emergency trip push button contact	Wired to inhibit closing of breaker
8.4.10	Master trip relay contact (if given)	Wired to inhibit closing of breaker
8.5	DC control supply bus in all panels	Fed by two DC incoming sources in Bus coupler panel with auto changeover facility
8.6	PT supply bus in all panels	Fed normally by bus PT with automatic changeover facility to incomer line PT

9.0 BUSBARS

9.1	Material	Aluminium alloy
9.2	Cross section	Uniform throughout length of switchgear

DocUUID : ef633536-12e1-468c-ba98-703264fe0eb1

9.3	Phase busbars	The phase busbars shall be enclosed in individual or a combined gas filled compartment. Busbars shall be silver or tin-plated at joints. Provision shall be made at the bolted connections to enable accessibility for maintenance and extension where appropriate.
9.4	Marking	All busbars and cable connections shall be marked to indicate the phase colouring, which shall be red, yellow and blue unless otherwise specified or explicitly precluded by relevant national standards.
9.5	Earth busbar	An earth busbar, sized for the earth fault rating of the electrical system and switchgear, shall be provided along the full length of the switchgear structure. The earth busbar shall have provision for earth cable connections at each end.
9.6	Supports	All phase and earth busbars and connections shall be sized, braced and supported to withstand the dynamic, dielectric stresses and thermal affects resulting from the switchgear rated short circuit current over the full length of the switchgear and carry certification from a recognized testing authority.
9.7	Rating	As per Annexure A / Tender SLD

10.0 EARTHING

10.1	Earthing of enclosure & non - current carrying parts	All metallic non-current carrying parts of the switchgear shall be bonded together and connected to the switchgear earth busbar. The frame of each functional unit and each device requiring earthing shall be connected directly to the earth busbar. For direct connection to the station earthing grid, earthing bolts of at least 10mm shall be provided at both ends of the main earth bar.
10.2	Busbar and Feeder Earthing	Through three position switch
10.3	Circuit breaker frame earthing	Integral earthing shall be provided on feeder/incoming circuit breakers for cable earthing, and on incoming or bus coupler circuit breakers for busbar earthing.
10.4	Earthing of withdrawable parts	Withdrawable parts shall be effectively earthed until they are completely withdrawn with all power and control connections disconnected.
10.5	Cable armour Earthing	Provision shall be made, adjacent to the cable termination, for connecting earthing cable armouring to the earth busbar.
10.6	Hinged doors	Earthed through flexible copper braid

DocUUID : ef633536-12e1-468c-ba98-703264fe0eb1

10.7	Metallic cases of relays, instruments and other LT panel mounted equipment	Connected to the earth bus by independent copper wires of size not less than 2.5 sq. mm with green colour insulation. For this purpose LT compartment should have a clear designated earth bus to which earth connections from all components are to be connected.
10.8	CT and PT neutral	Earthed at one place at the terminal blocks through links.
10.9	Instructions	Clear instructions, preferably pictorial, shall be provided showing methods of earthing wherever appropriate.

11.0 SURGE SUPPRESSOR

11.1	Provision	To be provided in all panels except bus coupler and BPT.
11.2	Type	Gapless, metal oxide type
11.3	Technical particulars	As per Annexure A / Tender SLD

12.0 CURRENT TRANSFORMER

12.1	Type	Window type with solid insulation of class of E or better.
12.2	Location	Shall be located outside the gas compartment.Each current transformer shall be provided such that the enclosure current does not affect the accuracy or the ratio of the device or the conductor current being measured. Provision shall be made to prevent arcing across the enclosure insulation.
12.3	Secondary terminals	The secondary terminals of current transformers shall be placed outside the high voltage enclosures, mounted in suitable, accessible terminal boxes and the secondary leads of all the current transformers shall be wired to shorting type terminals.
12.4	Rating plate	Should be located at position so that the details can be easily read.
12.5	No of cores and Rating	As per Tender SLD

13.0 VOLTAGE TRANSFORMER

13.1	Type	Each voltage transformer shall be metal enclosed, SF6 insulated in accordance with relevant IEC 60044. The location, polarity, ratios, and accuracy shall be as specified.
13.2	Location	VTs should be in segregated compartment and not forming a part of bus bar.
13.3	Disconnection provision	Motorised Disconnecting switch with provision for Manual operation.
13.4	No of cores and Rating	As per Tender SLD

DocUUID : ef633536-12e1-468c-ba98-703264fe0eb1

14.0 CABLE TERMINATION

14.1	Power Cable termination	
14.1.1	Cable entry	Socket and plug assembly shall be provided for the field power cables. Facilities shall be provided for cable testing including current and voltage injection of cables alongwith appropriate test plugs.
14.1.2	Dummy Plug	One dummy plug to be provided for each bay
14.1.3	Cable size and nos. of runs	As per Annexure B/ Tender SLD
14.1.4	Cable supports	Cable supports shall be provided to avoid undue strain on the cable termination assembly of GIS.
14.1.5	Gland plates	Termination of single core cables shall be through a non-magnetic metal panel or gland plate. Minimum air clearances shall be maintained over and above cable lugs and fixing bolts.
14.1.6	Armour Earthing	Provision should be made for bonding and earthing any armour and/or concentric earth conductors.
14.2	Control Cable termination	
14.2.1	Cable entry	Bottom and front entry
14.2.2	Gland plate	Undrilled 3mm CRCA

15.0 METERS

15.1	Mounting	Flush mounted
15.2	Voltmeter	Digital type with programmable ratio
15.3	Size	96x96 mm
15.4	Panels where to be provided	Incomer and bus PT panel
15.5	Voltmeter switch	Inbuilt in meter
15.6	Accuracy Class	1.0
15.7	Auxiliary supply	Universal type suitable for 230VAC and 220VDC
15.8	Energy meter provision	Energy meter is not in supplier's scope. Only space and CT/PT wiring is to be provided in all panels except bus coupler and bus PT. Dimension shall be 350(H)x200(W) mm^2.

16.0 MULTIFUNCTION METER

16.1	Model	**RISH 3440 and Conzerv EM 6400NG**
16.2	Make	Rishabh/Schneider
16.3	SCADA Interfacing	RS485 rear port suitable for integration on Modbus Protocol
16.4	Size	96x96 mm^2
16.5	Panels where to be provided	All panels

DocUUID : ef633536-12e1-468c-ba98-703264fe0eb1

16.6	Accuracy Class	1
16.7	Auxiliary Supply	48 – 240VDC and AC i.e universal type.

17.0 INDICATIONS & ALARMS

17.1	Indications	Flush mounted, High intensity, clustered LED type
17.1.1	Breaker ON	Red
17.1.2	Breaker Off	Green
17.1.3	Isolator On	Red
17.1.4	Isolator Off	Green
17.1.5	Earth switch On	Red
17.1.6	Earth switch Off	Green
17.1.7	Spring Charged	Blue
17.1.8	DC control supply fail	Amber
17.1.9	AC control supply fail	Amber
17.1.10	Auto trip	Amber
17.1.11	Heater circuit healthy	Yellow (Indication with integrated push button for checking)
17.1.12	Trip circuit healthy	White
17.1.13	PT supply as applicable	R,Y B
17.2	Alarm scheme with isolation switch	a. For DC fail, TC fail and CB auto trip in 11kV panels b. For all signals wired to annunciator in 66kV panels

18.0 SELECTOR SWITCHES & PUSH BUTTONS

18.1	Selector switches	Flush mounted on LV compartment door, with shrouded terminals
18.1.1	TNC switch with pistol grip	Lockable, spring return to normal position for CB, Isolator and earth switch control
18.1.2	Local / SCADA selector switch	2 pole
18.1.3	Rotary ON/OFF switches	For heater / illumination circuit
18.1.4	Rating	16 A
18.2	Push Button	Flush mounted on LV compartment door, with shrouded terminals
18.2.1	Emergency trip push button	Red color with stay put
18.2.2	Accept push buttons	Black color – Trip alarm / DC fail alarm
18.2.3	Reset push buttons	Yellow color – Trip alarm / DC fail alarm
18.2.4	Rating	10 A

DocUUID : ef633536-12e1-468c-ba98-703264fe0eb1

19.0 INTERNAL WIRING

19.1	Grade and type	1100 V, PVC insulated, FRLS type stranded flexible copper wire.
19.2	Voltage Rating	600 / 1000 Vac
19.3	Size	2.5 sq mm for CT circuit, 1.5 sq mm for PT & control circuits
19.4	Colour code	
19.4.1	CT & PT	R Ph – Red Y Ph – Yellow B Ph – Blue Neutral – Black
19.4.2	Others	DC– grey, AC-black, Earth – green
19.5	Ferrules	At both ends of wire
19.6	Ferrule type	Interlocked type (one additional red colour ferrule for all wires in trip circuit)
19.7	Lugs	Tinned copper, pre-insulated, ring type, fork type and pin type as applicable. CT circuits should use ring type lugs only.
19.8	Spare contacts	Spare contacts of relays and contactors etc. should be wired upto the terminal block.
19.9	Panel wiring	Panel wiring shall be on one side of the terminal block only. No more than two wires shall be connected to a terminal.
19.10	Interpanel wiring	Interpanel wiring for AC and DC supplies, voltage transformer circuits, annunciation circuits and other common services shall be provided on the same set of terminals in all the panels with proper segregation. Wires with ferrule to be terminated in the adjacent shipping section should be supplied with one end terminated and the other end bunched and coiled.
19.11	Wiring enclosure	Plastic channels for panel wiring, PVC sleeves for Inter panel wiring. Where wiring enters or passes through compartments containing high voltage apparatus, it shall be run in earthed continuous metallic conduit/trunking without gaps, holes or joints.

20.0 TERMINAL BLOCKS

20.1	Rating and Type	1100 V grade, moulded piece, stud type screw driver operated terminals complete with insulated barriers, washers, nuts and lock nuts.
20.2	Suitability	For termination of minimum 6sqmm flexible copper conductor.
20.3	Marking and covers	White fibre markings strip with clear plastic, slip-on / clip-on terminal covers to be provided.
20.4	Disconnecting Facility	To be provided in CT and PT terminals
20.5	Shorting & Earthing Facility	To be provided in CT Terminals

DocUUID : ef633536-12e1-468c-ba98-703264fe0eb1

20.6	Spare Terminals	20% in each TB row
20.7	TB shrouds & separators	Moulded non- inflammable plastic material
20.8	Clearance between 2 sets of TB	100 mm min
20.9	Clearance with cable gland plate	250 mm min
20.10	Clearance between AC / DC set of TB	100 mm min
20.11	Test terminal blocks	Screw driver operated stud type for metering circuit

21.0 SPACE HEATERS, SOCKETS & ILLUMINATION LAMPS

21.1	Space Heaters	
21.1.1	Type	Thermostat controlled with switch for isolation
21.1.2	Location	In Breaker & HV cable compartment, mounted on an insulator. Heater position in cable compartment should be easily accessible after cable termination.
21.2	Illumination lamp with switch	For LV & cable chamber
21.3	Universal type (5/15 A) Socket with Switch	In LV chamber

22.0 NAMEPLATES AND MARKING

22.1	Nameplates	To be provided as per the following description
22.1.1	Equipment Nameplates	a. All equipment mounted on front as well as inside the panels shall be provided with individual name plates with equipment designation/description engraved. b. All front mounted equipment shall be also provided at the rear with individual name plates engraved with tag numbers corresponding to the one shown in the panel internal wiring to facilitate easy tracing of the wiring.
22.1.2	Gas Single Line diagram	Single Line Diagram showing all HV devices in a single line diagram with the gas sectionalizing of the GIS indicated. Also shown shall be the GIS nomenclature, a legend, Manufacturer's type and serial number and year of manufacture.
22.1.3	Feeder Nameplates	Large and bold name plate carrying feeder identification/ feeder number shall be provided on the top of each panel on front as well as rear side. On rear side, nameplate should be provided on frame.
22.1.4	Panel Rating Plate	Following details are to be provided on Panel rating plate: a. Manufacturers name or trade mark

DocUUID : ef633536-12e1-468c-ba98-703264fe0eb1

		b. Switchgear designation c. Rated system voltage, phases, wires and frequency d. Rated fault current e. Busbar rating f. Insulation Gas Type and rated filling pressure for insulation g. Alarm pressure for insulation h. Minimum functional pressure for insulation i. Minimum functional pressure for operation j. Design pressure of gas filled compartment k. Year of manufacture l. Warranty Period m. Purchasers name n. Serial no o. Customer – BSES p. PO No. & Date – As per respective PO. q. CT rating details r. PT rating details
22.1.5	CB Rating Plate	a. Type / Model No. b. Month /Year of Manufacturing c. Current and voltage rating. d. Rated fault making and breaking current.
22.1.6	Material	Non-rusting metal or 3 ply lamicoid. Nameplates shall be black with white engraved lettering. Stickers are not allowed.
22.1.7	Fixing of rating plates and external nameplates	Shall be riveted to the panels at all four corners. Bolting/screwing is not acceptable.
22.1.8	Fixing of internal nameplates	Internal labels may make use of a durable proprietary labeling system unless specifically indicated otherwise.
22.2	Markings	Each switch shall bear clear inscription identifying its function. Similar inscription shall also be provided on each device whose function is not otherwise identified. If any switch or device does not bear this inscription separate nameplate giving its function shall be provided for it. Switch shall also have clear inscription for each position indicating e.g. Trip-Neutral close, ON-OFF etc.

23.0 MIMIC, LABEL AND FINISH

23.1	Mimic	
23.1.1	System Representation	Colored mimic diagram and symbols showing the exact representation of the system shall be provided in the front of Control & Relay Panel panel & LCC Panel

DocUUID : ef633536-12e1-468c-ba98-703264fe0eb1

23.1.2	Material	Mimic diagram shall be made preferably of painted aluminum or plastic (approved material), which shall be screwed on to the panel and can be easily cleaned. Painted overlaid mimic is also acceptable. The mimic bus shall be 2-3 mm thick. The width of the mimic bus shall be 12mm for bus bars and 10 mm for other connections
23.1.3	Mimic Indications	LED indications are to be used for breaker and isolator position and semaphore indicators shall be used for earth switch position.
23.2	Label	
23.2.1	Labels for meters, indication & all cards / sub assemblies in panel	Anodized aluminum with white character on black background
23.2.2	Danger plate on front & rear side	Anodized aluminum with white letters on red background
23.3	Finish	
23.3.1	Painting surface preparation	Shot blasting or chemical 7 tank process
23.3.2	Painting external finish	Powder coated polyester base grade A, shade –RAL 7032, uniform
23.3.3	Painting internal finish	Powder coated polyester base grade A, shade – white, uniform thickness 50 micron minimum
23.3.4	Labels for all components in panel	Anodized aluminum with white character on black background, fixed by rivets only
23.3.5	SLD	SLD of charges shall be provided at backside of the main door of Charger on Aluminium plate

24.0 APPROVED MAKES OF COMPONENTS

24.1	Contact Multiplication Relays	Alstom/Schneider/Siemens/ABB
24.2	Contactors	ABB/Siemens/Schneider/ Telemechanique
24.3	MCBs	Siemens/Schneider/Legrand/ABB
24.4	Control switches	Switron/Kaycee
24.5	Test terminal blocks	IMP/Schneider/Alstom
24.6	Terminal blocks	Elmex/Connectwell
24.7	Indicating lamps	Siemens/Teknic/ Binay
24.8	Surge Suppressors	Oblum/Tyco
24.9	Cable termination	Pfisterer/Sudkabel/ NKT/ Euromold
24.10	Multifunction Meter	Rishabh/Schneider

DocUUID : ef633536-12e1-468c-ba98-703264fe0eb1

25.0 INSPECTION AND TESTING

25.1	Type Tests	The product must be of type tested quality as per applicable Indian standards / IEC
25.2	Type test report validity period	Last five years from date of bid submission. Bidder with type test report more than 5 years old needs to re-conduct the tests without any commercial implication to BSES
25.3	Pressure relief device operation	Test certificate for panel to be submitted
25.4	Acceptance & Routine tests	To be done as per this specification and relevant standards. Charges for all these tests shall be deemed to be included in the equipment price. In addition to these tests, following tests have to be carried out as acceptance tests -
25.5	Primary injection test	To be carried out on panels selected for testing
25.6	Temperature rise test	One panel per Purchase order (PO with minimum 10 panels) without any commercial implication to BSES. In-house testing is acceptable.
25.7	Paint Thickness/ Peel off	To be carried out on panels selected for testing
25.8	Inspection	The purchaser/owner reserves the right to witness all the acceptance/routine tests during inspection.
25.9	Notice to purchaser for conducting type tests	At least three weeks in advance
25.10	Test reports before dispatch for approval	Six (6) copies of acceptance and routine test reports
25.11	Factory Acceptance Tests	The following type tests should be submitted for the GIS / CB / other equipments as applicable. Tests shall be conducted on one GIS bay of Each type. 1. Dielectric voltage withstand tests • Power frequency withstand voltage • Impulse withstand voltage 2. Making and breaking capability test 3. Short time current test and peak current test 4. Electrical / Mechanical endurance test 5. Continuous current carrying and temperature rise test 6. Current path resistance measurement 7. Pressure Tests 8. Partial discharge test 9. Internal arc tests 10. Proof tests for enclosures

DocUUID : ef633536-12e1-468c-ba98-703264fe0eb1

		a) Circuit breakers (in accordance with IEC 56) - Tests to prove performance when breaking line charging currents. - Tests to prove performance when breaking small inductive currents. - Mechanical and environmental test b) Gapless Surge Arresters (in accordance with IEC 99 - 4) - Insulation withstand test - Residual voltage test c) Steep current test d) Lightning current test e) Switching current test - Long duration current impulse withstands test - Operating duty test f) Disconnectors and Earthing Switches (in accordance with IEC 1259) - bus charging current switching test g) Current Transformers (in accordance with IEC 185) h) Potential Transformer (in accordance with IEC 186) i) Pressure Vessel Test - Test according to Pressure Vessel Code of the country of origin or CENELEC standards shall be performed on the enclosures.
25.12	Site Tests	The following tests shall be performed on the completely assembled switchgear at site after installation. Test results as well as test conditions like ambient temperature, gas pressure, dew point etc. shall be documented and the results compared with the relevant instructions and factory test reports. A final site test

DocUUID : ef633536-12e1-468c-ba98-703264fe0eb1

		report shall be supplied to the owner within 3 weeks after the tests have been finished. The vendor shall arrange all the required test equipments. 1. Visual inspection, checks and verifications. The following shall be inspected and verified: - Conformity of the assembly with the manufacturer's drawings and instructions. - Tightening of all pipe junctions, bolts and terminal connections. - Visual check of all control circuits, PT circuits, and CT circuits. - Proper function of the control, measuring, protective and regulating equipment including heating and lighting by means of the relevant commissioning reports. - Mechanical operation tests of Circuit Breaker, Disconnecting switch, earthing switch and fast acting earthing switch. - Rated SF6 gas pressure and control voltage: - O-C-O operation. - Maximum control voltage: O-C-O operation. - Minimum control voltage: O-C-O operation. 2. SF6 gas leakage test. The following parts shall be checked, using a leakage detector for SF6 gas indication: - each flange connection installed on site - each gas coupling - each bursting disc 2a. Internal fault location after arching

DocUUID : ef633536-12e1-468c-ba98-703264fe0eb1

		3. DC resistance measurement of the main circuits: 4. Gas density monitor check 5. Interlock test 6. Measurement of moisture content: The moisture test (dew point measuring) shall be made on > 10% of the SF6 gas compartments 3-4 weeks after gas filling. The moisture level shall then be within the specified level. 7. Manual operating check of circuit breaker, disconnect switch, earthing switch and fault making earthing switch . 8. Power frequency withstand of main circuit: After the completion of installation the GIS shall be tested with 80% of the AC voltage applied for the factory routine tests. Test duration shall be 1 minute. These tests shall be performed by means of special HV testing equipment connected to the GIS. The special testing equipment and special test adapters for flange connection (if required) shall be supplied by the manufacturer for temporary use during the tests. 9. Power frequency test of control circuit at 2 kV r.m.s. (1 min) 10. Any other tests to be recommended by the manufacturer.

DocUUID : ef633536-12e1-468c-ba98-703264fe0eb1

26.0 DEVIATIONS

- Deviation from this specification shall be stated in writing with the tender by reference to the specification clause/ GTP/ Drawing and description of alternative offer. In absence of such a statement, it shall be assumed by the buyer that the seller complies fully with this specification.

27.0 GTP

- Vendor must submit clause wise compliance against specification at the time of drawing approval clearly highlighting the deviations from specification against each clause.

28.0 DRAWINGS & DATA SUBMISSION MATRIX

- Drawing submission shall be as per the matrix given below. All documents/ drawing shall be provided on A3/A4 sheet in box file with separators for each section. PDF shall also be provided of all documents via USB.
- Language of the documents shall be English only. Deficient/ improper document/ drawing submission shall be liable for rejection.

S. No	Head	Bid	Drawing Approval	Pre Dispatch	Pre Closure
28.1	Contact Person Name, Email ID and Mobile Number	Required	Required		
28.2	Deviation Sheet (as per “Deviations” Clause)	Required			
28.3	GTP	Required	Required		
28.4	Relevant Type Test as per IS/IEC/UL	Required	Required		
28.5	Manufacturer's quality assurance plan and certification for quality standards		Required		
28.6	Sizing Calculation of Associated Equipment		Required		
28.7	Recommended Spares for five years of operation)		Required		
28.8	66 kV Switchgear , CRP and LCC				
28.8.1	General Arrangement	Required	Required		
28.8.2	Sectional Layout		Required		
28.8.3	Cabinet Layout		Required		

DocUUID : ef633536-12e1-468c-ba98-703264fe0eb1

S. No	Head	Bid	Drawing Approval	Pre Dispatch	Pre Closure
28.8.4	SLD	Required	Required		
28.8.5	Schematic Circuit diagram and Scheme of Each type of Panel		Required		
28.8.6	Communication Architecture		Required		
28.8.7	QAP		Required		
28.8.8	BOQ		Required		
28.8.9	Plan		Required		
28.8.10	Foundation Diagram		Required		
28.8.11	Make of all Component as per specification		Required		
28.8.12	Drawing of Substation Room		Required		
28.9	Installation, erection and commissioning manual		Required		
28.10	Inspection Reports			Required	
28.11	As manufacturing Drawings			Required	
28.12	Operation and Maintenance Manual			Required	
28.13	Trouble shooting manual			Required	
28.14	As built Drawings				Required

29.0 PACKING

29.1	Packing Protection	Against corrosion, dampness, heavy rains, breakage and vibration. During transportation/ transit and storage, panels may be subjected to outdoor conditions. Hence, packing of each panel shall be weatherproof.
29.2	Packing for accessories and spares	Robust wooden non returnable packing case with all the above protection & identification Label
29.3	Packing Identification Label to be provided on each packing case with the following details	
29.3.1	Individual serial number	
29.3.2	Purchaser's name	
29.3.3	PO number (along with SAP item code, if any) & date	
29.3.4	Equipment Tag no. (if any)	

DocUUID : ef633536-12e1-468c-ba98-703264fe0eb1

29.3.5	Destination
29.3.6	Project Details
29.3.7	Manufacturer / Supplier's name
29.3.8	Address of Manufacturer / Supplier / it's agent
29.3.9	Description and Quantity
29.3.10	Country of origin
29.3.11	Month & year of Manufacturing
29.3.12	Case measurements
29.3.13	Gross and net weights in kilograms
29.3.14	All necessary slinging and stacking instructions

30.0 SHIPPING

30.1	Shipping	The bidder shall ascertain at an early date and definitely before the commencement of manufacture, any transport limitations such as weights, dimensions, road culverts, Overhead lines, free access etc. from the Manufacturing plant to the project site. Bidder shall furnish the confirmation that the proposed Packages can be safely transported, as normal or oversize packages, up to the site. Any modifications required in the infrastructure and cost thereof in this connection shall be brought to the notice of the Purchaser.
		The Bidder shall be responsible for all transit damage due to improper packing.

31.0 HANDLING AND STORAGE

31.1	Handling and Storage	Manufacturer instruction shall be followed. Detail handling & storage instruction sheet / manual needs to be furnished before commencement of supply.

32.0 ACCESSORIES

- Should be supplied along with the each switchgear as per table below

S No.	Description	Qty
32.1	Current test plug/ adapter	2
32.2	Voltage test plug/ adapter	2
32.3	Operating Handles	2 sets
32.4	Adaptor Plug	2 sets
32.5	Gas leak detector – DILO make	1
32.6	Cable dummy plugs	1 set per Incomer/Trafo panel

DocUUID : ef633536-12e1-468c-ba98-703264fe0eb1

32.7	Special tools and tackles required for erection, testing, commissioning and maintenance of the switchboard should be supplied with the switchboard.	1 set
32.8	Other accessories required for trouble free operation of switchgear as per manufacturer recommendation.	1 set
32.9	Support Structure for GIS	1 Lot (As per requirement)

33.0 SPARES

- Spares requirement are tabulated below.
- Unit price for all the spares should be indicated in price bid.

S No.	Description	Qty
33.1	Contactors of each type	5
33.2	Contact Multiplication Relay of each type	5
33.3	Line voltage transformer	3 (1 set)
33.4	Bus voltage transformer	3 (1 set)
33.5	GIS End Termination Kit for 3 Phase cable	2 sets (Cable as mentioned in Tender SLD/ Annexure- B)
33.6	Current transformers suitable for incomer panel	3 (1 set)
33.7	Current transformers suitable for transformer panel	3 (1 set)
33.8	Current transformers suitable for bus coupler panel	3 (1 set)
33.9	Trip Coil	4
33.10	Closing Coil	4
33.11	CB Spring charging motor	2
33.12	Auxiliary switch	2 sets (2 Nos. each type)
33.13	Disconnector motor for isolator	1
33.14	Disconnector motor for earthswitch	1
33.15	Gas density switch	2
33.16	Bursting disc / pressure relief plate complete	2
33.17	Capacitive voltage indicator	6 (2 sets)
33.18	Mobile gas filling and evacuation along with Gas Filter device along with Gas Filter -DILO make	1 Set
33.19	SF6 Gas cylinders	4
33.20	Precision pressure gauge	1 No
33.21	Electronic moisture/SF6 gas humidity tester with dew point	1 No
33.22	Spare Terminals	20% of Supplied Items (Minimum)
33.23	Gas Leakage Detectors-Dilo Make	1 No
33.24	Other spares recommended by manufacturer may be added to this list	

DocUUID : ef633536-12e1-468c-ba98-703264fe0eb1

34.0 ANNEXURE – A – TECHNICAL PARTICULARS

34.1	SWITCHGEAR		
34.1.1	Type	Metal clad, SF6 gas insulated with SF6 type circuit breaker	
34.1.2	Service	Indoor	
34.1.3	Mounting	Free standing, floor mounted	
34.1.4	System Voltage	66kV	
34.1.5	Voltage variation	+/- 10%	
34.1.6	Frequency	50 Hz +/- 5%	
34.1.7	Phase	3	
34.1.8	Rated voltage	72.5 kV	
34.1.9	Rated current	As per Single line diagram	
34.1.10	Short time rating for 3 sec.	31.5 kA	
34.1.11	Internal arc classification and rating		
34.1.11.1	Classification	IAC – A – FLR	
34.1.11.2	Rating	31.5 kA for 3 second.	
34.1.12	Insulation level (PF rms / Impulse peak)	140 kV/ 325 kV	
34.1.13	System ground	Solidly earthed	Solidly earthed
34.1.14	Enclosure degree of protection	IP – 65 for gas filled compartments IP – 4X for Cable and LV compartment	
34.1.15	Bus bar – Main	Rating as per SLD, Short time rating as per clause 1.10.	
34.1.15.1	Material	Copper	
34.1.15.2	Bus bar joint plating	As per manufacturer's standard. Tape on joints is not acceptable.	
34.1.15.3	Bus identification	Colour coded	
34.1.15.4	Temperature rise	40 deg. C for conventional joints. 55 deg. C for silver plated joints	
34.1.16	Auxiliary bus bar	Electrolytic grade tinned copper	
34.1.17	Auxiliary DC Supply	220 V DC / 50 V DC	
34.1.18	Auxiliary AC supply	240 V AC 50 Hz	
34.1.19	Hardware	Stainless steel.	
34.1.20	Earth bus	Aluminium	
34.1.21	Power cable entry	From bottom and rear	
34.1.22	Control cable entry	From bottom and front (i.e breaker compartment)	
34.1.23	Gas pressure – busbar compartment		
34.1.23.1	Normal gas pressure		
34.1.23.2	Permitted range of Gas pressure for safe operation		

DocUUID : ef633536-12e1-468c-ba98-703264fe0eb1

34.1.23.3	Alarm level	
34.1.23.4	Gas pressure for operation of PRD	
34.1.23.5	Withstand gas pressure of enclosure	
34.1.23.6	Number of aux.contacts /stages provided for the gas density meter	
34.1.24	Gas pressure – breaker compartment	
34.1.24.1	Normal gas pressure	
34.1.24.2	Permitted range of Gas pressure for safe operation	
34.1.24.3	Alarm level	
34.1.24.4	Gas pressure for operation of PRD	
34.1.24.5	Withstand gas pressure of enclosure	
34.1.24.6	Number of aux. contacts /stages provided for the gas density meter	
34.1.25	Material and thickness of gas enclosure	
34.1.26	Total no. of Gas compartments per panel	
34.1.27	Number of Gas Density meters provided per panel	
34.1.28	Rating of Isolator (A)	Same as CB Rating
34.1.29	Rating of earthing switch (A)	Same as CB Rating
34.1.30	Guaranteed Gas leakage Rate	<0.5%
34.1.31	Rodent damage protection	Required
34.1.32	Ground and test device	Required
34.1.33	Equipment Labeling	Anodized Aluminium
34.1.34	Lift truck	If Required
34.1.35	Testing facility	
34.1.35.1	For Cable	Required
34.1.35.2	For CT	Required
34.1.35.3	For PT	Required
34.2	CIRCUIT BREAKER	
34.2.1	Voltage class, insulation level, short time rating	As specified for switchgear
34.2.2	Rated current	As per SLD.

DocUUID : ef633536-12e1-468c-ba98-703264fe0eb1

34.2.3	Duty cycle	O – 0.3 sec – CO – 3min – CO
34.2.4	Short circuit rating	
34.2.4.1	A.C sym. Breaking current	31.5 kA
34.2.4.2	Short circuit making current	78.75 kA
34.2.5	Operation time	
34.2.5.1	Break time	Not more than 4 cycles
34.2.5.2	Make time	Not more than 5 cycles
34.2.6	Range of Auxiliary Voltage	
34.2.6.1	Closing	85% - 110%
34.2.6.2	Tripping	70% - 110%
34.2.6.3	Spring Charging	85% - 110%
34.2.7	No. of spare aux. Contacts of Breaker, for Owner's use.	Minimum 4 NO + 4 NC
34.2.8	Nos. of spare auxiliary contacts of disconnector	Minimum 2 NO + 2 NC
34.2.9	Nos. of spare auxiliary contacts of earth switch	Minimum 2 NO + 2 NC
34.2.10	Manufacturer / Model No.	
34.2.11	Rated Voltage Range Factor, K	1.1
34.2.12	Power Frequency Withstand Voltage	140 kV
34.2.13	Lightning Impulse Withstand Voltage	325 kV
34.2.14	Rated Continuous Current	As per single line drawing.
34.2.15	Rated Transient Recovery Voltage Time to Peak (T2)	Manufacturers Standard
34.2.16	Rated Interrupting Time	60 ms
34.2.17	Time for Opening Operation	3 cycles
34.2.18	Time for Closing Operation	4 cycles
34.2.19	Closing and latching capability (peak)	Manufacturers Standard
34.2.20	Control Power Voltage Range, Trip Coil	220VDC
34.2.21	Control Power Voltage Range, Closing Coil	220VDC
34.2.22	Auxiliary Contacts Total	12

DocUUID : ef633536-12e1-468c-ba98-703264fe0eb1

34.2.23	Min. Auxiliary Contacts for Customer use	6
34.2.24	Auxiliary Contact voltage rating	220VDC
34.2.25	Auxiliary Contact current rating	10 A
34.2.26	Stored Energy System Minimum Voltage	187 VDC
34.2.27	Stored Energy Spring Charging Motor Current	MS
34.2.28	Stored Energy Spring Charging Motor Inrush	MS
34.2.29	Stored Energy Time to Fully Recharge Spring:	MS
34.2.30	Rated Operating duty cycle	O – 0.3Sec – CO -3min -CO
34.2.31	Rated out of phase switching capability to IEC 56	
34.2.32	Operating Power Consumption	
34.2.32.1	Trip Coil	
34.2.32.2	Closing Coil	
34.2.32.3	Operating Motor	
34.2.33	Number of trip coils	2
34.2.34	Quantity of Gas in CB	
34.2.34.1	Mass	
34.2.34.2	Volume at Normal Pressure	
34.2.35	Interrupting Gas Pressure Maximum / Normal / Minimum	
34.2.36	Number of Close / Open Operation possible without re-charging	
34.2.37	Number of operations possible before interrupter maintenance required	
34.2.37.1	At rated S.C. current	
34.2.37.2	At full load current	

DocUUID : ef633536-12e1-468c-ba98-703264fe0eb1

34.2.37.3	At no load	
34.2.38	Method used to relieve internal overpressure due to short circuit (Bursting disc / relief valve / none. Etc.)	
34.2.39	Operating pressure of pressure relief device	
34.3	CURRENT TRANSFORMERS	
34.3.1	Manufacturer and Model No	
34.3.2	Voltage class, insulation level and short time rating	As specified for switchgear
34.3.3	Type	Solid Insulation
34.3.4	Class of insulation	Class E or better
34.3.5	Ratio	As per SLD
34.3.6	Number of secondaries	As per SLD
34.3.7	Accuracy class	
34.3.7.1	Protection core	5P20
34.3.7.2	Protection (Diff. / REF)	PS
34.3.7.3	Metering	0.2s
34.3.8	Burden (VA)	Adequate for the protection & instruments offered i.e atleast 1.5 times the connected burden.
34.3.9	Excitation current of PS Class CTs	30 mA at Vk/4
34.4	VOLTAGE TRANSFORMERS	
34.4.1	Manufacturer and Model No	
34.4.2	Type	Cast resin, single phase unit
34.4.3	Rated Voltage	
34.4.3.1	Primary	66000/sq.rt.3
34.4.3.2	Secondary	110V/sq.rt.3
34.4.4	No. of phases	3
34.4.5	No. of secondary windings	2
34.4.6	Method of connection	Star/Star
34.4.7	Rated voltage factor	1.2 continuous, 1.9 for 30 seconds
34.4.8	Class of insulation	Class E or better
34.4.9	Accuracy class	
34.4.9.1	Protection	3P
34.4.9.2	Metering	0.2
34.5	SURGE ARRESTORS	

DocUUID : ef633536-12e1-468c-ba98-703264fe0eb1

34.5.1	Rated Voltage	60 kV
34.5.2	Maximum continuous operating voltage (MCOV)	52 kV
34.5.3	Nominal discharge current (Amps) (8/20 micro sec. wave) peak value	10kA
34.5.4	Discharge class	3

35.0 ANNEXURE- B - SLDS

DocUUID : ef633536-12e1-468c-ba98-703264fe0eb1

ANNEXURE-B1

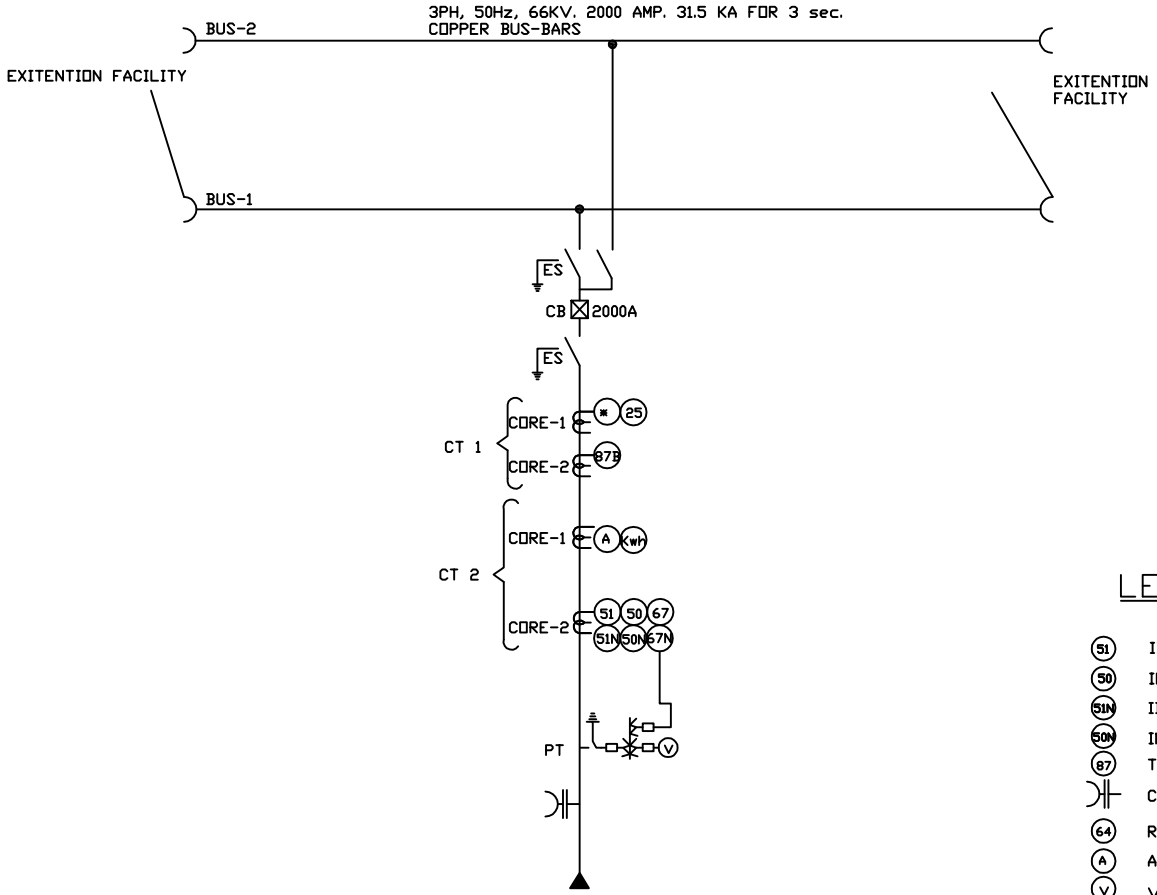

2X3CX300SQMM/3X1CX1000.AL.CONDUCTOR XLPE CABLES

CT-1
CORE1-1600-800/1A
ACCURACY-PS
Ie<-30mA at VK/4
Vk>40(Rct+4)V

CORE2-1600-800/1A
ACCURACY-PS
Ie<-30mA at VK/4
Vk>40(Rct+4)V

CT-2
CORE1-1600-800/1A
ACCURACY-0.2S
ISF>=10

CORE2-1600-800/1A
ACCURACY-5P20

PT
WINDING 1-66KV/√3/110/√3
CL-0.2

WINDING 2-66KV/√3/110/√3
CL-3P

LEGEND:

51	IDMT PHASE OVER CURRENT RELAY
50	INSTANTANEOUS PHASE OVER CURRENT RELAY
51N	IDMT EARTH FAULT RELAY
50N	INSTANTANEOUS EARTH FAULT RELAY
87	TRANSFORMER DIFFERNTIAL RELAY
	CAPACITIVE VOLTAGE INDICATOR
64	RESTRICTED EARTH FAULT RELAY (66 KV OF TRANSFORMER)
A	AMMETER WITH SELECTOR SWITCH
V	VOLTMETER WITH SELECTOR SWITCH
Kwh	ENERGY METER
*	LINE DIFFERENTIAL CUM DISTANCE OR DISTANCE RELAY AS PER TENDER DOCUMENT
67	DIRECTIONAL OVER CURRENT RELAY
67N	DIRECTIONAL EARTH FAULT RELAY
25	SYNCHRO CHECK RELAY
87B	BUSBAR PROTECTION

NOTE
1. REFER SPECIFICATION FOR DETAILED FUNCTIONAL REQUIREMENT OF RELAYS.

DRAWN	A.H/J.A	TITLE:- STANDARD SLD FOR 66KV INCOMER
CHECKED	S.G/A.S	
APPD.	G.S/G.N	
DATE	11.05.22	
SCALE	NTS	

BSES

SLD-GIS-66KV-01

ANNEXURE-B2

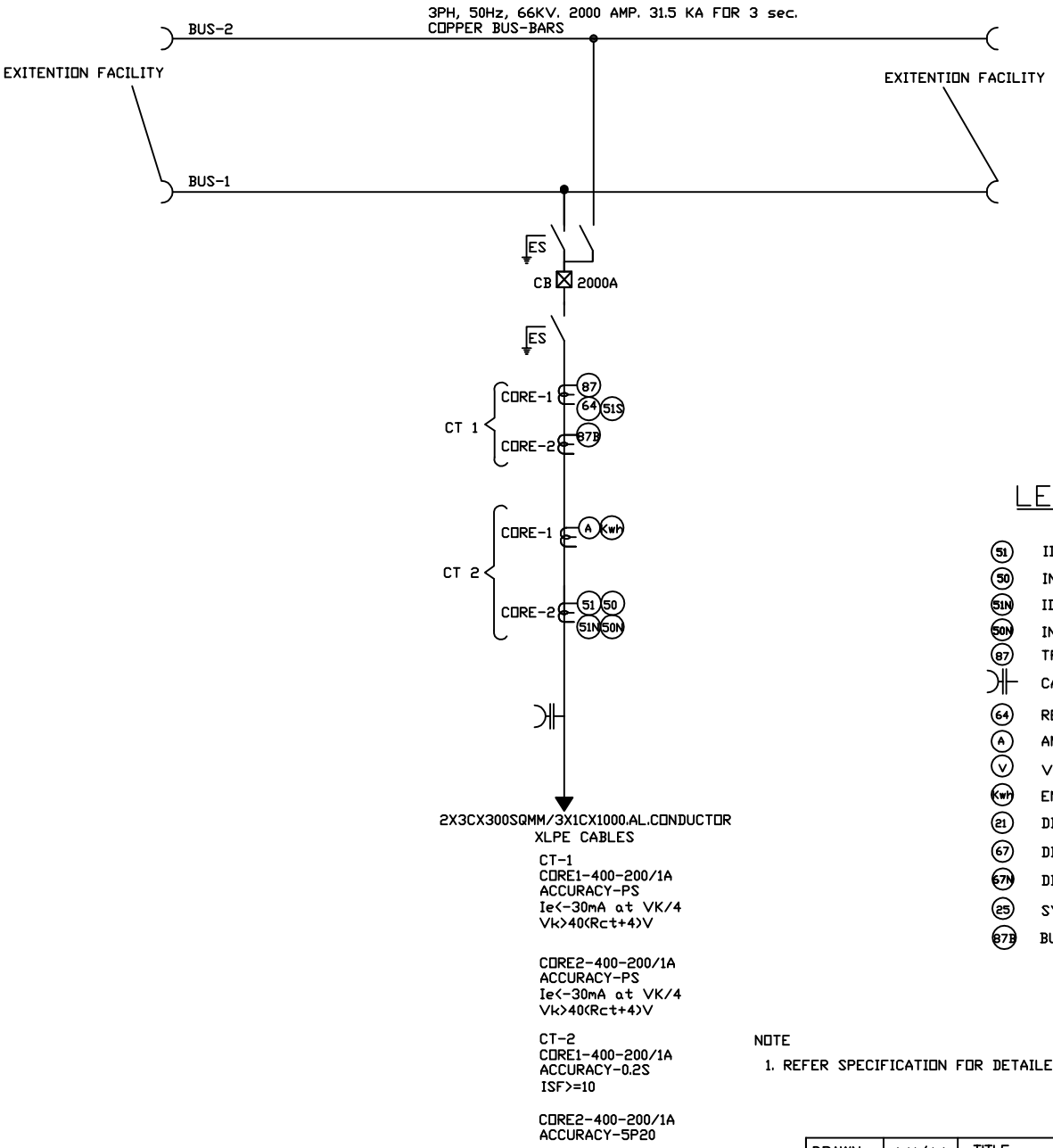

LEGEND:

- (51) IDMT PHASE OVER CURRENT RELAY
- (50) INSTANTANEOUS PHASE OVER CURRENT RELAY
- (51N) IDMT EARTH FAULT RELAY
- (50N) INSTANTANEOUS EARTH FAULT RELAY
- (87) TRANSFORMER DIFFERNTIAL RELAY
- CAPACITIVE VOLTAGE INDICATOR
- (64) RESTRICTED EARTH FAULT RELAY (66 KV OF TRANSFORMER)
- (A) AMMETER WITH SELECTOR SWITCH
- (V) VOLTMETER WITH SELECTOR SWITCH
- (Kwh) ENERGY METER
- (21) DISTANCE RELAY
- (67) DIRECTIONAL OVER CURRENT RELAY
- (67N) DIRECTIONAL EARTH FAULT RELAY
- (25) SYNCHRO CHECK RELAY
- (87B) BUSBAR PROTECTION

NOTE

1. REFER SPECIFICATION FOR DETAILED FUNCTIONAL REQUIREMENT OF RELAYS.

DRAWN	A.H/J.A
CHECKED	S.G/A.S
APPD.	G.S/G.N
DATE	11.05.22
SCALE	NTS

TITLE:-

STANDARD SLD FOR 66KV TRANSFORMER FEEDER

BSES

SLD-GIS-66KV-02

ANNEXURE-B3

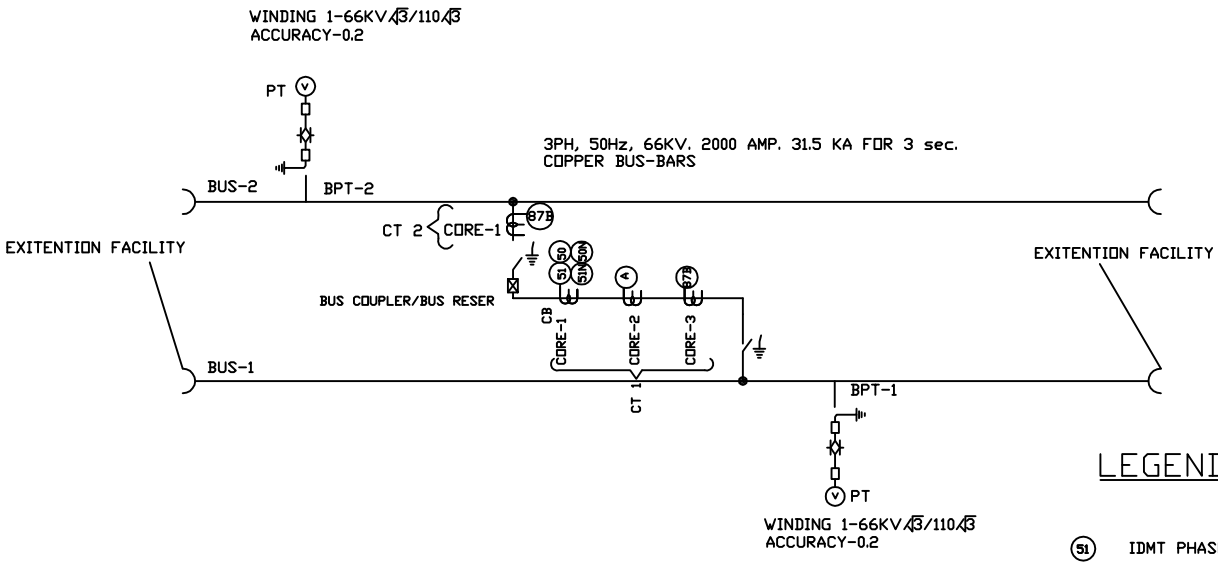

CT-1
CORE1-1600-800/1A
ACCURACY-5P20

CORE2-1600-800/1A
ACCURACY-0.5

CORE3-1600-800/1A
ACCURACY-PS
Ie<-30mA at VK/4
Vk>40(Rct+4)V

CT-2
CORE1-1600-800/1A
ACCURACY-PS
Ie<-30mA at VK/4
Vk>40(Rct+4)V

LEGEND:

- (51) IDMT PHASE OVER CURRENT RELAY
- (50) INSTANTANEOUS PHASE OVER CURRENT RELAY
- (51N) IDMT EARTH FAULT RELAY
- (50N) INSTANTANEOUS EARTH FAULT RELAY
- (87) TRANSFORMER DIFFERNTIAL RELAY
- CAPACITIVE VOLTAGE INDICATOR
- (64) RESTRICTED EARTH FAULT RELAY (66 KV OF TRANSFORMER)
- (A) AMMETER WITH SELECTOR SWITCH
- (V) VOLTMETER WITH SELECTOR SWITCH
- (kwh) ENERGY METER
- (21) DISTANCE RELAY
- (67) DIRECTIONAL OVER CURRENT RELAY
- (67N) DIRECTIONAL EARTH FAULT RELAY
- (25) SYNCHRO CHECK RELAY
- (87B) BUSBAR PROTECTION

NOTE
1. REFER SPECIFICATION FOR DETAILED FUNCTIONAL REQUIREMENT OF RELAYS.
2. ONE BPT TO BE PROVIDED FOR EACH BUS SECTION.

DRAWN	A.H/J.A
CHECKED	S.G/A.S
APPD.	G.S/G.N
DATE	11.05.22
SCALE	NTS

TITLE:-

STANDARD SLD FOR 66KV BUS COUPLER CUM BUS PT

BSES

SLD-GIS-66KV-03

BSES

Technical Specification

Of

66/33 kV Control and Relay Panel

Specification no – BSES-TS-86-CRP-R2

Rev:		2
Date:		26 Aug 2025
Prepared by	Shanmugam B	
Reviewed by	Uttam Shukla	
Approved by	Deepti R Sharma	

Contents

1.0 SCOPE 3
2.0 CODES AND STANDARDS 3
3.0 CYBER SECURITY 4
4.0 PANEL CONSTRUCTION 7
5.0 WIRING 9
6.0 TERMINAL BLOCKS 15
7.0 PAINT 17
8.0 MIMIC DIAGRAM 17
9.0 NAMEPLATES AND MARKINGS 18
10.0 EARTHING 19
11.0 NUMERICAL RELAYS 19
12.0 AUXILIARY RELAYS 32
13.0 SYNCH CHECK PHILOSPHY 35
14.0 MANAGED ETHERNET SWITCH 36
15.0 ANNUNCIATION 37
16.0 INSTRUMENTS 39
17.0 INDICATIONS 40
18.0 SELECTOR SWITCHES AND PUSH BUTTONS 41
19.0 CRP PANEL ACCESSORIES 42
20.0 APPROVED MAKES OF COMPONENTS 43
21.0 DEVIATIONS 44
22.0 DRAWINGS AND DATA SUBMISSION MATRIX 44
23.0 QUALITY ASSURANCE, INSPECTION & TESTING 46
24.0 PACKING 48
25.0 SHIPPING 49
26.0 HANDLING AND STORAGE 49
27.0 ABBREVATIONS 49
29. 0 ANNEXURE A, B, C, D, E

1.0 SCOPE

- This specification covers design, manufacture, testing at manufacturer's works, packing and delivery of control and relay panel (CRP) for 66kV and 33kV substations.
- The control and relay panel shall be complete with all components and accessories, which are necessary or usual for their efficient performance and trouble free operation under the various operating and atmospheric conditions. Such parts that may have not been specifically included, but otherwise form part of the CRP as per standard trade and/or professional practice and/or are necessary for proper operation of control and relay panel, will be deemed to be included in this specification.
- Scope also Includes-Licensed programming software and communication cord for offered numerical relays, one set of special tools and tackles (if any) required for maintenance of CRP and its components, Spares as per Annexure C, All relevant drawings, data and instruction manuals.

2.0 CODES AND STANDARDS

Control and Relay panels strictly designed and manufactured in accordance IS/IEC Std standards & purchaser requirements for smooth of the primary system equipments for proper power distribution.

Sl no.	Heading	Function Description
2.1	IS:1248, Part 1- 1993	Direct acting indicating analogue electrical measuring instruments and their accessories.
2.2	IEC:60688	Electrical measuring transducers.
2.3	IS:3231, Part 1- 1986 Part 2 &3 -1987	Electrical relays for power system protection.
2.4	IS:12729	Routine tests.
2.5	IEEE: 908-2018	Standard Guide for Safety in Substations.
2.6	IS:9000 Part 1 -1988	Basic environmental testing procedures for electronics & electrical items.
2.7	IEC:60255 / IEC61000	Specification for electrical relays. Measuring relays and protection equipment.
2.8	IEE:C37.24-2018	Standard for Power System Relaying terms and definitions.
2.9	IEEE:C37.90-2005	All Protection Trip Relays.
2.10	IEEE:C37.112- 2010	Guide for relay application in power systems.
2.11	IS:9000 part1-1998	Basic environmental testing procedures for electronics & electrical items.
2.12	IEEE:80	Guide for Safety in AC Substation Design.
2.13	IS:13703 - 1993	Low voltage fuses for voltages not exceeding 1000V AC or 1500V DC.
2.14	IEC:60629	Low Voltage fuses.
2.15	IEC:60282	High Voltage fuses.

2.16	IS:9244(part3) / IS:13703	HRC fuses.
2.17	IS:694	PVC insulated cables for working voltages upto and including 1100V.
2.18	IS:722	AC Electricity meters.
2.19	IEC:61850	Communication Networks and Systems in substations.
2.20	IEC:60529	Degrees of Protection provided by Enclosures.
2.21	IS:2982	Copper conductor in insulated cables.
2.22	IS:3961 (part1-part5)	Current rating for cables.
2.23	IS:5831	PVC insulating and sheath of electrical cables.
2.24	IS:375	Auxiliary wirings.
2.25	IS 2165 – 1977	Impulse withstand
2.26	BSS 162 – 1961	Indoor switchgear air clearance
2.27	IS 3042 – 1966	Earthing system
2.28	IS:1248	Indicating instruments and other applicable standards.
2.29	IEC:62351	Cyber Security type tests of IEDs/Numerical relays/Gateways/Transformer Tap controllers/Changers, etc with IEC 61850, IEC101, IEC103, IEC104 communication protocol network systems.
2.30	IEC:27036 IEC:20243 IEC:62443	Supply Electrical Devices from outside India, type tests for communications, cyber security conformance tests.
2.31	IEC:60973	OFC used for various equipments & panels located in AC/DC Switchyards, Control rooms, valve halls to transmit the required signals for integration, control, monitor, etc.

3.0 CYBER SECURITY

Sl no	Heading	Function description
3.1	Reference Standards	IEC:61850 – 5 to 10, IEC:27036, IEC:20243, IEC:62443, IEC:62351 and other relevant standards of IS/IEC/ANSI/IEEE,etc must be incorporated and Rules & Standards of Govt. of India, Ministry of Power/Other Central, State Departments & International best practice on Cyber security in Electrical Power Systems.
3.2	Policy	The documented type test & conformance valid parameters for a set of business rules and process for protecting information, computer resources, networks, devices,

		electrical/electronic programmable devices, software's, industrial control systems and other Information Technology (IT) / Operation Technology (OT) systems shall be used to protect a sensitive & critical infrastructure of Electrical Power generation, transmission, distribution in protections, control operations, measurements, monitoring purposes.
3.3	Cyber Security Threats, Violations, Incidents, Unauthorized access on Power System ITs/OTs.	Cyber security violation/incident occurs by unauthorized or illegitimate accessor a person, group of persons, entity, of data, applications, services, networks and/or devices through bypass of the underlying cyber security protocols, policies and mechanisms resulting in the compromise of the confidentiality, integrity or availability of data/information maintained in a computer resource, protection equipment's, protection devices, sensors, meter devices, mechanism, automation, RTUs, PLCs, SCADA and other connected within respective electrical utilities & organizations.
3.4	Cyber Security systems	The cyber security of electrical power systems/ networks shall be available to protect the security, integrity and reliability. The protection of IED's/other Electric/Electronic devices information (or data's) against unauthorized or destruction whether accidental or intentional.
3.5	Critical Assets	The critical assets shall be of system, equipments and facilities which, if destroyed, degraded or otherwise declared unavailable, would affect the reliability or operability of the electrical power system.
3.6	Type test reports IEC:62443, IEC:62351 (India made devices)	The IEDs, RTU, FRTUs, PLCs, SCADA, Communication network switches, any related programmable software's/hardware's, etc systems that involved in electrical power sector for control & monitoring critical information shall be verified for a sample size for testing minimum one number from each make, type and having same firmware version for the supply one lot size of 200 numbers or less.
3.7	Type test reports IEC:62443, IEC:62351 (India made devices)	The Smart meters, other energy meters the sample six for testing shall be minimum one number for each make, type and have same firmware version for the supply one lot size of 5000 numbers or less.
3.8	Type test reports IEC:27036 IEC:62443 IEC:62351 IEC:20243 (Other country made devices)	The IEDs, RTU, FRTUs, PLCs, SCADA, Meters, Communication network switches, any related programmable software's/hardware's, etc systems that involved in electrical power sector for control & monitoring critical information for importing products/system shall be verified for a sample size 5% of the supply lot for each make, type and having same firmware version for the supply lot.

3.9	Protection & Control devices, Network & Programmable devices of substation equipments	The IEDs, Communication Networks related devices, Software's, Hardware's in relation of critical electrical equipment which ever transfer data files, control & monitoring data files within power sector, state utilities for reliable power sector, which is a strategic & critical sector.
3.10	RBAC	Role Based Access Control a form of identity based access control where the system entities that are identified and controlled function positions in an organization or process.
3.11	IED'S like Protection devices, Control devices.	Communication protocol conformance standards shall be followed as per IEC 61850-5 to IEC 61850-10 and respective clauses.
3.12	RTUs,FRTUs,SCADA, PLC, etc with IEC communications.	Communication protocol conformance standards shall be followed as per IEC:60870-5-101/ IEC:60870-5-103/ IEC: 60870-5-104 and respective clauses.
3.13		Protocol Security conformance standards shall be followed as per IEC:60870-7, IEC:62351-100 part1&3 and respective clauses.
3.14	Smart meters with IEC 62056	Protocol Security conformance & Communication protocol conformance standards shall be followed as per IS:15959 series, IS:16444 series and respective clauses.
3.15	Mandatory tests case	The test is referencing a clause that is mandatory in IEC: TS 62351-5, IEC: TS 60870-5, IEC: 62351-3 which defines the requirements related to the authentication/encryption protocol, procedures and methods to be implemented at Fiber, TCP/IP(transport) level, Modbus, etc.
3.16	Approved/ Designated Laboratories	Central Power Research Institute (CPRI) approved laboratory for IEDs, RTU, FRTUs, SCADA, PLC systems. Central Power Research Institute (CPRI) Electrical Research & Development Association (ERDA), Yadav Measurements Pvt Ltd(YMPL) for Smart meter devices. If any other departments if approved shall be as per Ministry of Power/Other related departments for confirmation of Cyber security in power systems. If any changes according to Govt.rules/notifications/MoP,etc the same shall be incorporated time to time without cost implications.
3.17	Miscellaneous	Words and expressions used and not identified in these above regulations but defined in the information technology Act 2000 and the Electricity Act, 2003 shall be followed for cyber security of power system time to time.
3.18	Certificates Validity	Product certifications/type test reports of any Electrical/Electronic devices connected in power systems for respective protection/functions/controls/monitoring shall not be older than 5 years during supply of same items.
3.19	Reports	All necessary type test reports, certifications shall be submitted for CRP panel/ Equipments at Pre Bid / Engineering/ Inspection by supplier/vendor.

4.0 PANEL CONSTRUCTION

Sl no.	Heading	Function Description
4.1	Panel Type	Simplex panels with Height: 2200 Width min.1000mm to max.1200mm and Depth min.800mm and Total Height 2315mm (Inc. AV pad and Base frame). Equipment shall be mounted on the front of the panel and doors for wiring access shall be at the back of panels. Size of panel shall be decided during engineering.
4.2	Enclosure type	Completely metal enclosed and dust, moisture and vermin proof. Degree of protection not less than IP4X in accordance with IS 13947.
4.3	Enclosure material	Pre-galvanized, cold-rolled sheet steel of thickness not less than 2mm. Stiffeners shall be provided wherever necessary.
4.4	Doors	Double leaf doors shall be provided at the rear. Doors shall have handles with built-in locking facility. Doors hinged with padlocking type / Locks of the door shall be lever type(min 130º hinges). Door handles shall be of protruding type with three point locking facility as per industrial standards of IS/IEC.
4.5	Mounting plates	Mounting plates inside the cabinet's sheet steel of 3mm. Vertical front panel equipment mounted thereon and having wiring access from rear for relays. Any wiring between enclosures or mounting plates to the door shall be performed in cable conduits made of lupolen with fireproofing along with suitable conduit clips, providing conduit fixing, strain relief and cable tie eyelets.
4.6	Drawing placement	In each panel door shall be equipped with >A3 size steel pocket for wiring plan/scheme drawing/ test report, FAT, SAT reports, SOP, maintenance register, etc., placement and removals with safe hands by human.
4.7	Gland Plate	At least four separate gland plates of removable type with gasket shall be provided for each panel. They shall be of sheet steel of thickness not less than 3 mm.
4.8	Cable Entry	Shall be from the bottom unless otherwise specified.
4.9	Cable clamping	Cable glands shall not be used to support control cables. Vendor must provide clamping arrangement of control cable.
4.10	Gaskets	All doors, removable covers of panels shall be Gasketed all around with synthetic Neoprene/EPDM gaskets as per IS: 11149. However, XLPE gaskets can also be fixing protective glass doors.
4.11	Ventilating louvers	Ventilating louvers (Top/bottom) required & shall have screens and filters. The screens shall be made of either brass or GI wires mesh.

4.12	Foundation	The panels shall be fixed on the embedded foundation channels with intervening layers anti vibration strips made of shock absorbing materials.
4.13	Base Frame	Base frames shall be supplied along with panels. 100mm channel painted black.
4.14	Mounting	Equipment on front of panel shall be flush mounted. No equipment shall be mounted on the doors.
4.15	Equipment mounting	The center lines of switches, SLDs, push buttons and indicating lamps, 750mm and 1100mm. Height of aux.relays, meters >300 mm from the bottom of the panel and Numerical relays fix at 1200~1600mm from panel base. (shall be decided during engineering stage) SLD, MFM, TVM, Control switches, indication lamps between 650mm~1150mm from bottom of panels. From 1200 ~ 1600 mm protection relays. (shall be decided during engineering stage)
4.16	Device access	All panels shall have maintenance access to the hardware and wiring through lockable full height doors.
4.17	Appearance	The center lines of switches, push buttons and indicating lamps shall be matched to give a neat and uniform appearance. Likewise the top lines of all meters, relays and recorders etc, shall be matched.
4.18	Fluorescent Lamps for illumination	Enclosure lighting with fluorescent tube light with quick-start facility, suitable for local LVAC supply and controlled by a door or swing frame operated switch shall be fitted at the top of each single cubicle or cabinet part.
4.19	Panel illumination	All panels should be provided 240V AC illumination lamp with white LED lights 15W~20W rating at front and rear for illumination. Limit switches should be provided on the doors to control the switching.
4.20	Heater Circuits	All panels should be provided with heater, thermostat, hygrostat for controlling moisture and should be installed on safe location inside the panel.
4.21	Auxiliary power	All panels shall be supplied with 230V AC, 50Hz Single phase, 5A switches & duplex socket arrangement for maintenance.
4.22	Power Socket and switch	240V, 5/15A universal type socket to be provided in each panel with on-off switch.
4.23	MCBs and Fuses	Provision for receiving, distribution, isolation and fusing of DC and AC supplies to various control circuits should be made using MCBs, RCDs, RCCBs, ELM and HRC Fuses of appropriate ratings as per purchaser requirements.
4.24	Logo	BSES logo shall be fixed at Top - left of panel.

4.25	Make	ABB/HITACHI/SIEMENS/SCHNEIDERELECTRIC/GE
4.26	Cable Trays and NS enable support	Perforated / ladder type (Galvanized Iron) with cover for laying all types of the cables. Installation of cable trays with accessories or trench as required for the cabling work.
4.27	Cable Gland	Double compression cable glands (Materials – Brass and Stainless Steel & Suitable for Industrial Grade) of different sizes for cable entry into the RTU, DCU, CRP & Other panels.
4.28	Corner Edge	There shall be no sharp corners or edges. All edges shall be rounded to prevent injury.

5.0 WIRING

Sl no.	Heading	Function Description
5.1	Internal wiring	All wiring shall be carried out with 1100V grade single core multi strand flexible copper conductor wires with PVC insulation and shall be Flame Retardant Low Smoke (FRLS) type, vermin and rodent proof. The current carrying capacity of wire shall be adequate for the duty assigned to it considering short circuit condition and shall have sufficient flexibility to facilitate proper termination at any location. Make of wire shall be of Polycab/KEI/Finolex,etc.
5.2	Wiring size	Energy metering : CT,VT circuits of 2.5 SQ.MM Current Transformer : CT circuits of 2.5 SQ.MM Voltage Transformer : VT circuits of 2.5 SQ.MM Control Circuits(ckts) : DC circuits of 1.5 SQ.MM Tripping ckts : DC circuits of 2.5 SQ.MM DC Bus wirings : DC circuits of 4.0 SQ.MM AC & Earthing ckts : Unless otherwise specified shall be of 2.5 SQ.MM. In case of space constraint imposed by equipment terminal blocks 1.5 Sq mm wire shall be allowed after prior approval for RTU/SCADA signal ckts.
5.3	Color Code	
5.3.1	Current Transformer (CT) circuits	RED, YELLOW, BLUE, BLACK.
5.3.2	Voltage Transformer (VT or PT) circuits	RED, YELLOW, BLUE, BLACK.
5.4	Cable wiring colours	DC Control Circuits : GREY. AC Circuits : WHITE. Earthing Circuits : YELLOW-GREEN.

5.5	DC Bus wiring	The DC wire 4.0SQMM conductor of extra flexible class 6 conductors with insulation Red & Black TPE of Double sheath transparent PVC(Type TM2 to VDE0207) or XLPO cable [min.1100 – max.1800Vdc rated] shall be used with temperature rating -25˚C to +70˚C.
5.6	Ferrules	Ferrules marked to correspond with panel wiring diagram shall be fitted at both ends of each wire. Ferrules shall fit tightly on the wire. Heat shrinking ferrule sleeves with printed ferrules to be used for identifying cables & signals.
5.7	External cables	The supplied cable shall be as per latest IS std, also refer control cable specification &Armoured cables should be supplied for tray/trench applications.
5.8	AC & DC Circuits ferrules	CT,VT circuits, Control ckts, AC/DC ckts, Earthing ckts : WHITE tube with BLACK text letters.
5.9	Tripping Circuits	Tripping ckts : RED tube with WHITE text letters Note: In case of tripping circuits "T" marked in ferrules. Example: K101T.
5.5	Termination	Fork type, pin type and ring type (as applicable) tinned copper lugs to be used. Only ring type lugs should be used in CT circuits. Insulated sleeves shall be provided at all the wire terminations. All the lugs shall be Dowells / Jaison make only.
5.6	Wiring Enclosure	Plastic channels to be used as enclosures. PVC sleeves to be used for interpanel wiring.
5.7	Spare Contacts	Spare contacts of relays and contactors etc. should be wired up to the terminal block.
5.8	Inter-panel wiring	When panels are arranged to be located adjacent to each other inter panel wiring of common bus wires between the panels should be supplied with one end terminated and the other end bunched and coiled with proper lugs crimped and insulation for safe handling at site. Inter panel wiring shall be clearly indicated in the wiring tables. Longitudinal troughs extending throughout the full length of the panel shall be preferred for inter panel wiring. Inter-connections to adjacent panel shall be brought out to a separate set of terminal blocks located near the slots of holes meant for taking the inter-connecting wires. Wiring termination at interface panel end shall be through prefabricated plug-in type connectors.
5.9	FO patch chord	The FO patch chord between interpanel shall be run through separate longitudinal troughs inside panels and flexible PVC conduits for cross section between panels, Ethernet switch sides, Numerical relays side with proper insulations.

5.10	RS485	2P X 0.5 SQMM Screened GI Armored RS485, Twisted pair(2 pair), 22 Gauge Belden, 98428761 or equivalent for external (RTU to BCU, BCPU, MFM, BATT.CHG, TVM, Annunciations, Transformer Monitoring Devices, Load shedding, Cyber security devices, DCU, other devices whichever applicable with RS485 communication as per BSES requirements.
5.11	RJ45 – CAT6 cable	Ethernet cables (CAT6) with conduit pipe for internal connections and GI armored cables for external connections.
5.12	Auxiliary supply	Auxiliary bus wiring for AC and DC supplies, voltage transformer circuits, annunciation circuits and other common services shall be provided on the same set of terminals in all the panels with proper segregation.
5.13	DC selection scheme	Individual DC source from DCDB with DC changeover selection switch for each panels. DC Bus wiring between panels shall be provided as redundancy of DC wiring circuits.
5.14	DC Safe Wiring methodology	Panel wiring shall be securely supported, installed by lacing, tying, readily accessible and connected to equipment terminals and terminal blocks. Accidental short circuiting of certain wires is likely to result in malfunction of equipment, such as CB closing/tripping of or Positive/Negative wires, these wires shall not be terminated on adjacent terminal blocks (Except source input DC positive/negative terminals).
5.15	Termination at TB	Maximum of two wires shall be at one side of terminal block allowed. Not more than two wires shall be connected to any terminals such terminal block, relay contacts, auxiliary relay, etc where ever wiring connected in CRP panels. If necessary additional looping with adjacent terminal blocks shall be allowed as per scheme requirements.
5.16	Spares	At least 20% spare terminals shall be provided with corresponding lugs fixed in it. These spare terminals shall be uniformly distributed on all terminal blocks.
5.17	External cables	The supplied cable shall be as per latest IS std, also refer control cable specification & Armored cables should be supplied for tray/trench applications.
5.18	**Fiber Optic (OFC) Armoured Cable**	
5.18.1	FO cable	Armoured multimode (OM2) with corrugated polymer coated steel tape uni-tube LSZH FO cable, Fiber count 6 nos, 62.5/125 µmfor external connections
5.18.2	Operating Temperature	-20ºC to +80 ºC.(Installation, Service, Storage)
5.18.3	Fiber	Multimode : 48nos
5.18.4	Fiber type	OM2 50/125

5.18.5	Max.Cabled Fiber attenuation dB/km	8500nm:3.5; 1300nm:1.5
5.18.6	Tensile load	Max Tensile load: Short Term = 2700N, Long Term = 800N.
5.18.7	Cable OD	Cable OD: 11.5 mm±0.25%
5.18.8	Cladding Diameter	Cladding Diameter: 125± µm
5.18.9	Standard	As per standards IEC 11801, EIA/TIA 568B.
5.18.10	Filling Gel	Thixotropic gel to prevent water ingress in loose tube (ITCO T 250)
5.18.11	Fiber per Tube	12nos.
5.18.12	Tube	4nos. (Thermoplastic Material PBT)
5.18.13	Central strength member filler	2nos. FRP reinforced plastic (FRP) to provide tensile strength and antibuckling properties.
5.18.14	Water blocking elements	Cable flooding gel is added in interstices of core to prevent water ingress in the cable cable (ITCO C 480)
5.18.15	Water penetration	1m heat, 3m samples, 24hr
5.18.16	Core covering	Binder & Polyester tape
5.18.17	Rip cord	2 nos Polyester based twisted yarn
5.18.18	Outer sheathing	UV Proof Black MDPE(ME 6052/ME 6056)
5.18.19	Optical Fiber colour	Blue, Orange, Green, Brown, Slate, White, Red, Black, Yellow, Violet, Pink, Aqua
5.18.20	Loose Tube colour	OM2: Brown
5.18.21	Other Sheath colour	Black
5.18.22	Drip Test	30cm, 70 ºC, 24hr
5.18.23	Type test	Type test shall be carried out as per IEC60793, IEC60794-1-2/GR20 std.
5.18.24	Attenuation	Change in attenuation shall be ≤0.05dB
5.19	**Fiber Optic Patch Cable (FO Patch Chord/Patch card)**	
5.19.1	Mode/Connector	Multimode Duplex with LC connector on both sides.
5.19.2	Operating Temperature	-40ºC to +80 ºC.
5.19.3	Loss	Insertion loss ≤0.2dB
5.19.4	Connector	Ceramic connector ferrule.
5.19.5	Repeatability	Repeatability should be less than 0.2dB, 100 mating cycle.
5.20	**Light Interface Unit (LIU)**	

5.20.1	Mounting	12 port wall mount / 19" panel mount LIU loaded with LC pigtails and adaptors with adaptor plates as per site requirements.
5.20.2	Steel	Aluminium / Stainless steel base material
5.20.3	LIU inner portion	LIU shall be provided with splice tray, cable spool provision inside for fiber connections.
5.20.4	Accessories	Cable ties, mounting ear screw, earthing & spiral wrap tubes shall be provided as per requirements.
5.20.5	Materials	Adaptor plate shall be made of Cold Rolled Steel material.
5.20.6	Insertion loss	Insertion loss ≤0.2dB for Zirconia sleeve.
5.21	LAN SWITCHES	
5.21.1	Cyber security	Compliance as per NERC CIP - 3,5,7 for cyber security
5.21.2	SNMP	Support SNMPv3 (Full SNMP support including Traps)
5.21.3	Web interface	Web based GUI or CLI based with HTTPS/HTTP and SSH / Telnet support
5.21.4	IPvX support	Support for IPv4 & IPv6 switching simultaneously
5.21.5	Layer	Layer 3 static routing functionality
5.21.6	Syslog	Syslog facility for local as well as remote server
5.21.7	Remote support	Support for remote management
5.21.8	LED	LED indication for port status/supply etc.
5.21.9	VLAN	Shall support VLAN IEEE 802.1Q
5.21.10	IGMP	IGMP snooping
5.21.11	Spanning Tree	Spanning tree protocol IEEE 802.1d or RSTP IEEE 802.1w
5.21.12	SNTP	Shall support SNTP
5.21.13	IEEE	Shall support IEEE 1588 PTP
5.21.14	Network access	Port based network access control (IEEE 802.1x)
5.21.15	Quality	Quality of service (IEEE 802.1p)
5.21.16	IP traffic	Shall support unicast as well as multicast IP traffic
5.21.17	SNTP time	SNTP time synchronization
5.21.18	Mac	Shall support Mac Binding
5.21.19	Fan	Fanless design
5.22	**Cable Gland**	
5.22.1	Cable Gland	Double compression cable glands (Materials – Brass and Stainless Steel & Suitable for Industrial Grade) of different sizes for cable entry into the RTU, DCU, CRP & Other panels. The gland shall be robust and heavy duty.

5.22.2	Material	Brass as per IS-319 standard. If Aluminium/M.S/S.S IS:304/316)
5.22.3	Non-Armoured cable glands	Double compression cable glands for un-armoured cables providing 2 nos of environmental seal for the outer sheath of cables having universal clamping range, allowing the cable to be easily disconnected from the equipment, for maintenance and changeout, etc.
5.22.4	IS/IEC std	Gland shall comply to IS12943:1990/ IEC 62444, IEC 60529(Weather proof)
5.22.5	Temperature	Armored cable: -60ºC to +100 ºC, Un-Armoured cable: -30ºC to +100 º C.
5.22.6	Ingress protection	IP-67 weather proof glands as per IEC 60529:2001, IP-66 as per IS/IEC 60079 for armoured& un-armoured cables
5.23	**RS485 to RS232 converter**	
5.23.1	Power supply	Operating power supply ranges min.24 – 60V dc source.
5.23.2	Isolation of signals	Galvanic isolation of 1kV between RS485 & RS232 signals.
5.23.3	Nodes	Should support 32nodes on RS485 side.
5.23.4	Physical wiring	RS485 interface should support both 2 wire & 4 wire signals.
5.23.5	Communication range	Communication speed / data transfer rages shall be user selectable type.
5.23.6	Mounting method	Din Rail Mounting system
5.24	**RJ – 45Connectors**	
5.24.1	Standards	Applicable standards: EIA/TIA 568 C-2, IEC 60603-7-4.
5.24.2	Voltage & Current levels	Max. Voltage: 250Volts, Current: 2Amps.
5.24.3	Contact Resistance	Contact Resistance: 20m Ω.
5.24.4	IR value	Insulation resistance: 100MΩ.
5.25	**RS 485 Cable for serial communication**	
5.25.1	Dielectric	Dielectric withstand of 1KV, 50Hz AC for 1 min
5.25.2	Pair	2 pair/4 pair, 22 AWG(7x32), Tinned copper, PE insulation, Overall Beldfoil + tinned copper braided (90%) shielded, PVC outer jacket.
5.25.3	Impedance	Characteristics impedance shall be 120Ω.
5.25.4	Capacitance	Capacitance between conductors shall be less than 100pF/mtr. Conductor and shield shall be less than 200pF/mtr.
5.26	**Cable Tray**	
5.26.1	Type	Perforated / ladder type (Galvanized Iron) with cover for laying all types of the cables. Installation of cable trays with accessories or trench as required for the cabling work.

5.26.2	Standard	IS 1079
5.26.3	Steel	Cable trays shall be made of single MS sheet
5.26.4	Dimension	Widthx300mm, Depthx75mmx Thicknessx2mm. Coupling plates shall be 3mm thickness.
5.26.5	Connections	Cable tray shall be heavy duty and perforated type with matching fittings like elbows, bends etc and accessories like bolts, nuts, washers, GI strip, hook.
5.26.6	Edge	All tray corners shall be smooth and free from sharp edges.
5.26.7	Certificates	Test certificates shall be submitted during inspection for cable tray materials and Galvanizing coating.
5.27	Spare Contacts	Spare contacts of relays and contactors etc. should be wired up to the terminal block.
5.28	RTU to Substation devices hardwire connections / communications	Laying and Termination of armoured communication cables (Ethernet, Fiber Optic Patch chords/cards, FO cables, RS 485 cables) between Grid Devices (Numerical relays, Transformer monitoring devices/modules, TRF.M.Box, TRF.OLTC M.Box, Smoke detectors, CCTV n/ws, Cyber security, NIFPS panel, MFM, Battery Charger, Battery banks to RTU/DCU/Gateway with proper tagging and dressing up to RTU panel.
5.29	Other accessories	Supply of suitable glands, white sleeves PVC Ferrule with black text letter, tagging, lugs shall be scope of vendor's supply. RTU to all device communication with suitable cables shall be in scope of vendor's supply.

6.0 TERMINAL BLOCKS

Sl no.	Heading	Function Description
6.1	Rating and Type	Terminal Blocks (TB) of 1100 V grade, continuous current rating of max.35A on the terminals and non-breakable type. Molded piece, stud type screw terminals complete with insulated barriers, melamine housing brass terminals, washers, nuts and lock nuts. Screw clamp, overall insulated, insertion type, channel/rail mounted terminals can be used in place of stud type terminals as per requirements.
6.2	Suitability	Unless otherwise specified, terminal blocks shall be suitable for connecting the following conductors of cable on each side- a. All circuits including current / voltage transformer circuits: 6mm^2 flexible copper. b. AC / DC power supply circuits: one no of 10 mm^2 Al(aluminum)./ 6 mm^2 flexible Cu(copper).
6.3	Marking and covers	White fiber markings strip with clear plastic, slip-on / clip-on terminal covers to be provided and A reflective prints on HIP(High Intensity Prismatic) films which contain lens to reflect at night when light shines with clear plastic, slip-on /

		clip-on terminal covers to be provided in yellow stickers.
6.4	Disconnecting Facility	To be provided in CT,VT terminals.
6.5	Shorting & Earthing Facility	To be provided in CT, VT Terminals.
6.6	CT,VT terminals	Refer Single Line Diagram for details of CT,VT wiring/communications cables as per purchaser approved documents.
6.7	Spare Terminals	20% in each TB row. The spare terminals shall be provided with lugs mounted on it.
6.8	Segregation	TBs shall be segregated by application i.e separate terminal blocks shall be provided for each application as follows (a) CT (b) VT or PT (c) Circuit Breaker (d) Transformer Cubicle/OLTC Cubicle (e) Individual Bay Marshalling kiosk (f) Bus Isolator / Disconnector -1,2 (g) Line/Transformer Isolator / Disconnector -1 (h) Line Isolator-2 (i) Line/Transformer/Bus Earth Switch-1 (j) Line/Transformer/Bus Earth Switch-2 (k) Interpanel Bus wiring (l) RTU/SCADA wiring etc. (m) AC source ckts. (n) DC source ckts. (o) Announciation ckts. (p) Indication lamp ckts. (q) Metering ckts (r) Bus Inter-panel wiring ckts of AC/DC/VT/Control ckts.
6.9	Vertical clearance with gland plate	Minimum 250mm.
6.10	Clearance between two rows of TBs	Minimum 150mm.
6.11	Test Terminal Blocks	Screw driver operated stud type for metering circuits.
6.12	TB contact materials	The terminal shall be such that maximum contact area is achieved when a cable is terminated. The terminal shall have a locking characteristic to prevent cable from escaping from the terminal clamp unless it is done intentionally. The TB conducting part in contact with cable/wire shall be preferably tinned/silver/nickel/copper/zinc shall be preferred.

6.13	Arrangement	Arrangement of the terminal block assemblies and the wiring channel within the enclosure shall be such that a row of terminal block runs in parallel and close proximity to each side of the wiring duct. The side of the terminal block opposite the wiring duct shall be reserved for the external cable connection.
6.14	Categorization	For ease of external connections, terminal blocks shall be categorized based on their usage i.e all terminals for wiring of particular equipment like circuit breaker should form one terminal block.
6.15	Tightness	The Terminal block wiring shall be tight with respect to its function as per standard Torque limit wherever applicable as per IS/IEC Std and OEM recommended values.

7.0 PAINT

Sl no.	Heading	Function Description
7.1	Paint Type	Powder coated. Pure Polyester base grade-A, structure finish.
7.2	Paint Shade	Exterior: RAL 7032 “Siemens Grey”.
7.3	Paint Shade	Interior: RAL 9003 “Glossy White”.
7.4	Paint Thickness	Minimum 70 microns.

8.0 MIMIC DIAGRAM

Sl no.	Heading	Function Description
8.1	System Representation	Colored mimic diagram and symbols showing the exact representation of the system shall be provided in the front of control panels.
8.2	Material	Mimic diagram shall be made preferably of painted aluminum or plastic (approved material), which shall be screwed on to the panel and can be easily cleaned. Painted overlaid mimic is also acceptable. The mimic bus shall be 2-3 mm thick. The width of the mimic bus shall be 12mm for bus bars and 10 mm for other connections.
8.3	Mimic Indications	LED indications are to be used for breaker and isolator position and semaphore indicators shall be used for earth switch position.

9.0 NAMEPLATES AND MARKINGS

Sl no.	Heading	Function Description
9.1	Nameplates	To be provided as per the following description.
9.2	Equipment Nameplates	a. All equipment mounted on front side as well as equipment mounted inside the panels shall be provided with individual name plates with equipment designation engraved. b. All front mounted equipment shall be also provided at the rear with individual name plates engraved with tag numbers corresponding to the one shown in the panel internal wiring to facilitate easy tracing of the wiring.
9.3	Feeder Nameplates	(a) Large and bold name plate carrying the feeder identification numbers shall be provided for circuit / feeder designation on the top of each panel on front as well as rear side. (b) Rear bottom of each panel shall have a nameplate clearly indicating the following: (i) Purchaser Name (ii) BSES, PO No. & date (iii) Drawing Reference No (iv) Voltage Level, Bay No (v) Panel Serial No (vi) Year of Manufacture (vii) Control Voltage (viii) Customer care No
9.4	Material	Non-rusting metal or 3 ply lamacoid. Nameplates shall be black with white engraving lettering with reflection Or Reflective Stickers are allowed which have a reflective prints on HIP(High Intensity Prismatic) films which contain lens to reflect at night when light shines on them [Suitable text/background colours] with suitable base material fixture.(shall be discussed during engineering stage).
9.5	Fixing	All nameplates/rating plates shall be riveted to the panels at all four corners. Bolting/screwing is not acceptable.
9.6	Markings	Each switch shall bear clear inscription identifying its function. Similar inscription shall also be provided on each device whose function is not otherwise identified. If any switch or device does not bear this inscription separate nameplate giving its function shall be provided for it. Switch shall also have clear inscription for each position. Ex. Trip-Neutral close, ON-OFF etc.

10.0 EARTHING

Sl no.	Heading	Function Description
10.1	Panel Earthing	All panels shall be equipped with an earth bus securely fixed.
10.2	Location of earthing bus	Earthing bus shall be at rear side of CRP panel (Flush mounting front equipment back side).
10.3	Material	The material and the sizes of the bus bar shall be 25 x 6 mm copper flat unless specified otherwise. Bimetallic strips shall be provided in order to connect external earth grids as per site requirements.(if required)
10.4	Earth Bus joints	All bolted joints in the bus should be connection of two bolts.
10.5	Hinged Doors	Earthed through flexible copper braid wires of at least $16mm^2$.
10.6	Relays & Instruments earthing	All metallic cases of relays, instruments and other panel mounted equipment including gland plate, shall be connected to the earth bus by copper wires of size not less than 2.5 mm^2. The color code of earthing wires shall be yellow-green. The earth wire connecting at earth bar with copper bolt & nut. Each panel shall be provided with additional copper bolt & nuts throughout the earth bus bar with space between each bolt & nut. Only two wires permitted for each earth connection at a time.
10.7	CT and VT circuit earthing	CT and VT secondary neutral shall be earthed at one place only at the terminal blocks through links.
10.8	Electronics Earth Pit / Earth riser	All Numerical relays, Ethernet Switches, other Electronics products shall be equipped with Electronics Earth pits (min.2 no) separately as per IS standards, Industrial standards of practice.

11.0 NUMERICAL RELAYS

Sl no.	Heading	Function Description
11.1	**General features of Protection Numerical Relays**	
11.1.1	Relay details	All relay shall comply with latest cyber security guidelines. Relay-1 & Relay -2 shall be of same make. The Relay shall be finalized during details CRP panel scheme final approval and relays must fulfill site commissioning requirements with integration of RTU/SCADA system stage and it is deemed to be without any cost implications. All relays shall be provided with conformal coated. The repair cost within 5 years after lapse of warranty shall not be more than 30% of Relay

		purchase price.
11.1.2	Technology and Functionality	Numerical, Artificial Intelligence, Microprocessor based with latest version, provision for multifunction protection, control, metering and monitoring, etc
11.1.3	Coating	Conformal Type. Coatings shall also protect relays against corrosive gases such as H_2S or SO_2 other gases for safe & reliable function of Hardware/Firmware/Comm. modules.
11.1.4	Mounting	Flush Mounting, IP5X. In case of vents/perforations on Top of relay necessary wedge covers with side vents/perforations to be provided. Relays shall be fixed above 400mm from base plate.
11.1.5	Architecture	Hardware and software architecture shall be modular and dis-connectable to adapt the protection and control unit to the required level of complexity as per the application.
11.1.6	Redundant Ethernet Port	2xfiber, 2xelectrical port running PRP, HSR, Failover (two fiber pairs/two copper pair), Dual IP and a mixture of Fiber ports & Copper ports and Maintenance/Engineering port additional. ❖ Communication port: LC duplex/RJ45. As per protection & RTU/SCADA requirements.
11.1.7	Data Transfer rates	The Fiber port/Copper Ethernet ports connections shall be 1310nm with single mode/multi mode 100Base Fx – High speed data rates with multiple masters “Clients” capability.
11.1.8	Date Model layers	The Standard practice of Data model layer with Physical device, Logical device, Wrapper/Logical node instance, Data object, Data attribute shall be followed & meet latest IEC formats.
11.1.9	Protection relay System	The protection relay shall be carefully designed for independent electrically, physically from equipments of CRP and terminal wirings from other segregated circuits of primary systems & other associated panels during cable wiring connections.
11.1.10	Protection relay operation with primary system	The protection relays shall be carefully designed such a way that there will be no operational restrictions for control interlocks & operations of primary system equipments [SWGR / CB/ ISOLATOR / EARTH SWITCH, etc] of AIS / GIS / SWGR, etc. for its normal operations, including conditions of ON LOAD BUS TRANSFER function of individual feeders.
11.1.11	Relay interference with primary system	The relay must be carefully programmed with latest software, firmware, hardware versions for control, operations, Interlocking logics, GOOSE signals [interlock signals, reports measurement, IO signals] between IEDs for safe operation of primary system without abnormal protection alarms & events [Volt – functions like under/over volt/VT fuse fail; Current – CT supervision, protection starts or trip] in DCS/SAS/SCADA.
11.1.12	Protection relay & auxiliary interface	All protection relay shall be provided functions with internal timer logics for safe operations of respective binary input/output commands, aux.relay pickup/drop off for voltage

		selection & contact multiplications in scheme drawings. At any condition these aux.relays OFF/Fail/Mal operation conditions must not trip main primary system CB/SWGR devices. If any deviations which result power loss then suitable penalty imposed on vendor/supplier based on BSES standards & Indian Govt.rules of power ministry & other respective organizations. (Ex.CPRI, CBIP, CEA, PowerGrid, etc)
11.1.13	Power fails	No control relay, which shall trip the power circuit breaker when the relay is de-energized, shall be employed in the circuits.
11.1.14	Relay wiring circuits	All protection and its aux.relay wiring carefully provided in such a way that there should not be different voltage levels AC/DC volts (RTU volts/DC volts/ Other device volts) within a single relay IO module(NO,NC), aux.relay (NO, NC) contacts. This may cause unwanted magnetic interference between NO, NC contacts leads to failure of relay IO module/aux.relay contact failure and produce abnormal conditions for primary system of feeder.
11.1.15	Protection relay communication cable power limits	The attenuation and receive power shall be measured and confirmed to be within the specified limits as per relay OEM recommendations/instruction sheets/manuals.
11.1.16	Relay communication Protocol	IEC 61850-1, IEC 61850-9-2LE OR IEC 61850-9-2/IEC 61869 Flexible streams, IEC 60870-5-103, IEC 60870-5-104, MODBUS TCP, DNP 3.0 Serial/TCP, IEEE C37.94**,** IEEE 802.1X VLAN, LON, SPA, etc. shall be provided as per site requirements.
11.1.17	Advanced Security	Extensive security like AAA, Radius, RBAC(Role Based Access Control), logging of security-related events(Syslog), signed firmware, authenticated network access, etc.
11.1.18	Processing Indications	SCADA functions in monitoring direction shall be executed on SPI (Single Point Input) and DPI (Double Point Input). DPI shall only be used in case of Isolator and Circuit breaker “close” and “open” indication.
11.1.19	Command Processing	Functionality of command processing offered for SCADA interface shall include the processing of single and double commands i.e SCO (Single Command Output) and DCO (Double object command Output). DCO shall only be used in case of Isolator and Circuit Breaker “close” and “open” command. If any other commands shall be same discussed during engineering stage.
11.1.20	PC/Laptop Interface port	For each relay type one set of communication leads with necessary accessories/converters (USB type required- For PC/Laptop side) must be provided along with original licensed software of Unlimited users application (min.10 users) for all relay programming & settings, etc. The software and communication cable for each site must be provided separately without any cost implications.

11.1.21	Human machine Interface (HMI)	An alphanumeric key pad and graphical LCD display with backlight indicating measurement values and operating messages. It should be possible to access and change all setting and parameters without the use of PC.
11.1.22	GOOSE messaging	Relays shall communicate all status signals, commands, analog signals, interlocks signals and events on GOOSE messaging. Status of GOOSE signal shall be monitored. Goose signal shall be reported without time delay at SCADA & between IEDs.
11.1.23	Relay Characteristics	Relay shall integrate all necessary protections for different applications in accordance with IS and IEC. Relay shall provide wide setting ranges and choice of all IEC, IEEE, ANSI and other tripping curves through a minimum of three setting groups.
11.1.24	Relay Event & Fault records	i. Relay shall have the facility of recording of various parameters during event/fault with option to set the duration of record through settable pre fault and post fault time. ii. Relay should store last 100 events (minimum). iii. Relay should store last 10 fault records (minimum). iv. Fault/Disturbance records must be downloaded locally to PC/Laptop and to remote SCADA. v. Relay shall provided Maximum fault current value on 61850 for all the protection settings vi. Sys Log shall be store at IEDs & shall be retrievable via front/rear communication as per requirements.(If login & password protection required, the same shall be intimated to customer) vii. Relay should record waveform of not less than 1sec each which can be triggered through user selectable inputs such as Protection start, trip stage signals, Analog, Binary(BI/BO), Virtual/GOOSE signals and other user defined signals. The waveform record should support standard Comtrade file explorer software. Waveform recorder configuration should be user friendly. For Differential Protection relay, Waveform recorder of relay should record all differential and Bias current, REF volt/current along with standard Current and Voltage channel. All Virtual Signals(Input, Output), Commands should be user configurable as latched and un-latched. viii. Disturbance recorder shall have minimum recording time of 3 sec (0.5 sec for prefault and 2.5sec for postfault) per fault generated & shall be user settable.
11.2	**Relay supply and analog input, binary input & outputs ratings and details**	
11.2.1	Power supply	48 ~ 250V DC/AC universal power supply module as per purchaser requirement.

11.2.2	Temperature	-20ºC to +70ºC with humidity parameters.
11.2.3	Analog Module	Refer Single Line Diagram for details of CT,VT secondary circuit for wiring/communications as per purchaser approved documents. Example: CT 1/5 A AC; VT 110V AC.
11.2.4	Ratio corrections	Software based CT,VT Ratio & Vector corrections feature (Without Interposing CT, other CTs). Line/cable capacitive current compensation protection functions.
11.2.5	Thermal rating of voltage circuit	Continuous: 2xVn.
11.2.6	VA Burden	≤ 0.4VA.
11.2.7	Operating Frequency range of 50Hz	At least : 20 ~ 65 Hz.
11.2.8	High Break contacts	30VA, 40W (resistive loads), 25VA for L/R≤40ms 25W.
11.2.9	Operating time of contacts	≤ 12ms.
11.2.10	Transducer Input Module	Transducer 4 – 20mA inputs shall be required for as per site requirements.
11.2.11	RTD inputs	Resistance Temperature detection inputs shall be required as per site requirements.
11.2.12	PT100	PT100 inputs shall be required as per site requirements.
11.2.13	Binary Inputs	Opto coupler based binary inputs shall be provided.
11.2.14	Binary Output	Standard Output, High-speed Power Output contacts, etc shall be provided.
11.2.15	Binary Input & Binary Output signals	The following **primary equipment signals** shall be wired to the relays' binary inputs/outputs as applicable: For GIS/AIS Bays: ❖ **Circuit Breaker (CB)**: Status, control, operations, auto-reclose (A/R), breaker failure (LBB). ❖ **Disconnector & Earth Switches**: Status, control, operations, interlocking within the bay, with respect to busbars and bus coupler bays. ❖ **LCC Panel Signals**: ➢ Control operations, interlocking, DC fail, annunciation, circuit trouble alarms, and other necessary signals. wired to relays' binary inputs/outputs. ❖ **SF_6 Gas or Green Gas or Siemens Blue GIS**: **The SF6 gas (Sulfur hexafluoride)** for GIS equipments **Or** **Green potential gas (**a **potent greenhouse gas**, [C4-FN, CO2, N2,O2, CO2O2,etc]with a mixture of carbon dioxide

		(CO2), oxygen (O2), and small amounts of fluoronitrile (C4-FN) in their GIS equipment) For AIS Bays: ❖ **Circuit Breaker (CB)**: Status, control, operations, auto-reclose (A/R), breaker failure (LBB), SF_6 gas pressure low, lockout alarms. ❖ **Disconnector/Isolator & Earth Switches**: Status, control, operations, interlocking within the bay and with respect to busbars and bus coupler bays. ❖ **Panel & System Alarms**: Control signals, interlocking, DC fail, annunciator circuit trouble alarms, wired to the relays' binary inputs/outputs. For Other Devices: ❖ All relevant signals from **Transformers, OLTCs, Capacitor Banks, NIFPS**, **Ethernet switches, RTU/SCADA/DR Systems** and other equipment / devices, etc. The signals are to be taken from field equipments to numerical relays through hardwires. This list is indicative and signals should not be limited to this. Additional signals can be taken during review of actual drawings. The **final configuration and mapping** of all binary inputs and outputs shall be finalized during the detailed engineering stage based on site-specific requirements and approved design documentation as per BSES requirements only.
11.2.16	Spares	Binary input, Binary output of minimum 5% spare contacts must be provided other the scheme, which shall be wired upto spare terminal blocks for purchase use.
11.3	**Numerical Relay protection program, setting, signals, communication details**	
11.3.1	Relay capability	Relay programmable for logic, control, settings, events, fault recorders, GOOSE and block of unused ports. The LEDs shall be RESET via both HMI/Relay software/SCADA system shall be preferred. Software based Ratio & Vector corrections feature (Without ICTs). All programs/settings shall be with password lock facility is must.
11.3.2	Relay measurement	Relays shall communicate all measured and monitored parameters like current, voltage, active power, reactive power, apparent power, power factor, phase angle, event record, fault record, BIs ,BOs etc to SCADA.
11.3.3	Relays stability	High stability during external fault with heavy CT saturation due to transients.

11.3.4	Relay communication	Dedicated port for communication with remote end relay through optical fiber. This port should be in addition to PC/Laptop interface and SCADA interface ports. Necessary accessories must be provided like patch chords, LIU according to BSES requirements only to meet communication of relays.
11.3.5	Self-diagnosis	Relay shall be able to detect internal failures and same shall be transmitted to SCADA as a soft signal. A watchdog relay with changeover contact shall provide information about the failure for annunciation. Any binary input & output contact failure by internal a event shall be provided as alarm & report to SCADA. The IRF shall not be generated in such cases. Watchdog should be other than BO count. Two watchdog contact shall be provided as per purchaser requirements.
11.3.6	Time synchronization	All relays shall be capable of being synchronized with the system clock through SCADA, PC/Laptop, SNTP, IRIG-B, PTP. (To be discussed during engineering stage)
11.3.7	HMI Indication/LEDs	Multicoloured /Coloured LEDs with push button for resetting. RESET of LEDs must be provided via HMI/Relay software (PC/Laptop), SCADA(Work stations) possible from SCADA through dedicated function blocks.
11.3.8	Signal Integration for binary inputs & outputs	Relays must have provision for inversion of binary input signal High/Low as per control/protection logic requirements without affecting external wiring connections. All signal integration shall only be through NO,NC contact as per site & purchaser requirements.
11.3.9	Relay Function keys with Locking facility	Relay shall have properly defined function key set as per Protection requirements with locking facilities of Local/Remote control modes of functions.
11.4	**CRP Panels & Relay Sales, Service Supports**	
11.4.1	Numerical Relay performance	The relay performance certificates (<5 year) must be submitted by vendor as per IS/IEC std during bidding stages.
11.4.2	Num. Relay Life cycle	Protection relay shall be chosen in such a way that OEM supplier shall not phase out relay for next 10 years in International/India origin manufacturing units.
11.4.3	Num. Relay Rejection	Relays likely to be phased out in next 5 years must not be offered by vendor & if found offered will be rejected at any stage even post award/drawing approval/site execution.
11.4.4	Num. Relay Operation & Maintenance	The vendor shall supply relay such a way that where OEM supply support spare modules of relay if in case fail, relay configuration modifications along with updates as per firmware/software for 15 years duration after expiry of warranty period.
11.4.5	Warranty & Guarantee	Warranty & Guarantee should cover 66 months for CRP panel & numerical relays from supply.
11.4.6	CRP panel & numerical relay warranty	The vendor/supplier CRP panels all products & devices including numerical relays shall be five year warranty period from commissioned date. If any material found faulty during

		warranty period shall be replaced within min.24hrs to max.one weeks time. If purchaser replaced with any cost implication, the same shall be deducted or borne by vendor/supplier.	
11.4.7	Warranty sales & service supports	A service to enable any faulty items of protection equipments to be rectified or replaced within 24 hours by vendor or OEM during warranty periods. Suitable spares and support engineers shall be available to meet this equipment normalization without any additional cost implications & there by charging primary system for its stable operation & monitoring. If purchaser replaced with any cost implication, the same shall be deducted or borne by vendor/supplier.	
11.5	**Protection Relay Requirement for Line CRP (66kV/33kV)**		
11.5.1	Relay 1: M1FP	Line/Cable Differential protection(two/three terminals), Line/Cable Distance protection of relay with latest version & necessary additional protection functions as per site requirements.(shall be decided during detailed engineering)	
		Combine Line/Cable differential (Dual Channel, ST/SC/LC port compatible for Single Mode fibre having wavelength min.1310nm max.1510nm.(shall be decided during detailed engineering)	
		Distance Protection	
		Current Protection: Dir.OC, Dir.EF, Ins.OC, Ins.EF, TOC, TEF etc. each of min.3 stages shall be provided.	
		Voltage Protection: OV, VT Fail, etc.	
		Power Swing Block, Broken Conductor	
		Auto reclose functions (3phase) with its enable/disable, interlock inputs internal logic/external inputs shall be provided. (if OHL Fdr ckt)	
		Block Auto Reclose internally or externally at local end and facility to send blocking signals to remote end relay internally (through FO Communication Channels) during SOTF trips.	
		Other protection & control logic functions shall be decided during engineering stage.	
		Communication port	1. ST/SC/LC – Line/Cable Differential OFC. 2. 2xLC duplex FO/2xRJ45 copper – SCADA. (shall be decided during detailed engineering)
		The relay shall have features to test at one end all the functions associated with the protection, without the presence of personnel at the remote end.	
		The relay shall have inter-tripping compliant with IEC60834-1 & IEC 60834-2 respectively for signaling as appropriate.	
		These includes necessary optical fiber cable & associated accessories for connection between the current differential	

		relay panel and existing fiber optic distribution panel(FODP).
		The attenuation and receive power shall be measured and confirmed to be within the specified limits as per relay OEM recommendations/instruction sheets/manuals.
11.5.2	Relay 2: M2FP	Bay control relay of 3 phase operations of Isolators/Disconnector, Circuit Breaker, Earth Switches with latest version & necessary additional protection functions as per site requirements.(shall be decided during detailed engineering)
		Current Protection: Dir.OC, Dir.EF, Ins.OC, Ins.EF, TOC, TEF etc. each of min.3 stages shall be provided.
		Voltage Protection: UV, OV, Sync, VT Fail, etc.
		Auto reclose functions (3phase) with its enable/disable, interlock inputs internal logic/external inputs shall be provided. (if OHL Fdr ckt)
		Reverse Blocking Function.
		Local Breaker Backup protection, Broken Conductor functions.
		Other protection & control logic functions shall be decided during engineering stage.
		Communication port: 2xLC duplex FO/2xRJ45 copper – SCADA. (shall be decided during detailed engineering)
11.5.3	Configurable Binary input/outputs	Relays Analog, Binary inputs, Binary outputs shall be provided as per scheme requirements with additional 4 BI, 4 BO for future use.
11.5.4	SLD	Refer annexure E1 and E5 for SLD of 66kV and 33kV line bays respectively or Refer Single Line Diagram as per purchaser approved documents.
11.6	**Protection Relay Requirement for Transformer CRP (66kV/33kV)**	
11.6.1	Relay 1: M1PTP	Two or Three winding low impedance biased differential protection / high impedance differential protection & necessary additional protection functions as per site requirements.(shall be decided during detailed engineering)
		2nd Harmonic & 5th Harmonic function.
		Current Protection: Dir.OC, Dir.EF, Ins.OC, Ins.EF, TOC, TEF etc. each of min.3 stages shall be provided.
		Overflux protection.
		StandBy EF (HV/LV), Sensitive EF (HV/LV) protections.
		Other protection & control logic functions shall be decided during engineering stage.
		Communication port: 2xLC duplex FO/2xRJ45 copper – SCADA. (shall be decided during detailed engineering)
11.6.2	Relay 2: M2PTP	Bay control relay of 3 phase operations of

		Isolators/Disconnector, Circuit Breaker, Earth Switches, OLTC operations with latest version & necessary additional protection functions as per site requirements.(shall be decided during detailed engineering)
		Current Protection: Dir.OC, Dir.EF, Ins.OC, Ins.EF, TOC, TEF etc. each of min.3 stages shall be provided.
		Voltage Protection: OV, Sync, VT Fail, etc.
		Frequency Protection: OF, UF, df/dt, etc.
		Local Breaker Backup protection, Broken Conductor functions.
		Local Breaker Backup protection, Broken Conductor functions.
		Other protection & control logic functions shall be decided during engineering stage.
		Communication port: LC duplex
11.6.3	Configurable Binary input/outputs	Relays Analog, Binary inputs, Binary outputs shall be provided as per scheme requirements with additional 4 BI, 4 BO for future use.
11.6.4	SLD	Refer annexure E2 and E6 for SLD of 66kV and 33kV transformer bays respectively or Refer Single Line Diagram as per purchaser approved documents.
11.7	**Protection Relay Requirement for Bus Coupler CRP (66kV/33kV)**	
11.7.1	Relay 1: M1BCP	Protection functions as per site requirements.(shall be decided during detailed engineering)
		Voltage Protection: OV, UV, Sync, VT Fail, etc.
		VT fuse fail monitoring Bus-2 VT ckt
		Other protection & control logic functions shall be decided during engineering stage.
		Communication port: 2xLC duplex FO/2xRJ45 copper – SCADA. (shall be decided during detailed engineering)
11.7.2	Relay2: M2BCP	Bay control relay of 3 phase operations of Isolators/Disconnector, Circuit Breaker, Earth Switches with latest version & necessary additional protection functions as per site requirements.(shall be decided during detailed engineering)
		Current Protection: Dir.OC, Dir.EF, Ins.OC, Ins.EF, TOC, TEF etc. each of min.3 stages shall be provided.
		Voltage Protection: OV, UV, Sync, VT Fail, etc.
		Local Breaker Backup protection functions.
		Reverse Blocking Function.
		Other protection & control logic functions shall be decided during engineering stage.

		Communication port: 2xLC duplex FO/2xRJ45 copper – SCADA. (shall be decided during detailed engineering)
11.7.3	Configurable Binary input/outputs	Relays Analog, Binary inputs, Binary outputs shall be provided as per scheme requirements with additional 4 BI, 4 BO for future use.
11.7.4	SLD	Refer annexure E3 and E7 for SLD of 66kV and 33kV bus coupler bays respectively or Refer Single Line Diagram as per purchaser approved documents.
11.8	**Protection Relay Requirement for Capacitor Bank CRP (66kV/33kV)**	
11.8.1	Relay 1: M1CBP	Current Protection: Dir.OC, Dir.EF, Ins.OC, Ins.EF, TOC, TEF etc. each of min.3 stages shall be provided.
		Frequency Protection: UF, df/dt, etc.
		Out of balance protection with Close inhibit function with timer with min.0.0 sec to max.60 minute.
		Over load protection
		Under Current protection
		Other protection & control logic functions shall be decided during engineering stage.
		Communication port: 2xLC duplex FO/2xRJ45 copper – SCADA. (shall be decided during detailed engineering)
11.8.2	Relay 2: M2CBP	Bay control relay of 3 phase operations of Isolators/Disconnector, Circuit Breaker, Earth Switches with latest version & necessary additional protection functions as per site requirements.(shall be decided during detailed engineering)
		Current Protection: Dir.OC, Dir.EF, Ins.OC, Ins.EF, TOC, TEF etc. each of min.3 stages shall be provided.
		Voltage Protection: OV, UV, Sync, VT Fail, etc.
		Frequency Protection: OF, UF, df/dt, etc.
		Reverse Blocking Function.
		Local Breaker Backup protection, Broken Conductor functions.
		Other protection & control logic functions shall be decided during engineering stage.
		Communication port: 2xLC duplex FO/2xRJ45 copper – SCADA. (shall be decided during detailed engineering)
11.8.3	Configurable Binary input/outputs	Relays Analog, Binary inputs, Binary outputs shall be provided as per scheme requirements with additional 4 BI, 4 BO for future use.
11.8.4	Stabilizing resistor & Metrosil	The protection relays which requires setting of stabilizing resistor, non-linear resistor (Metrosil) shall be provided for protection functions as per site requirements.(shall be decided during detailed engineering)

11.8.5	SLD	Refer annexure E4 and E8 for SLD of 66kV and 33kV capacitor bays respectively or Refer Single Line Diagram as per purchaser approved documents.		
11.9	**RTU/SCADA Interfacing of Protection Systems details**			
11.9.1	The following signals shall be hardwired between SCADA/RTU & Protection panels for reference only. (To be discussed with SCADA Dept)			
11.9.2	Analog Inputs	All analog inputs shall be SCADA Compatible. I. mA inputs for Tap Position II. mA inputs for Temp OTI III. mA inputs for Temp WTI_HV IV. mA inputs for Temp WTI_LV V. mA inputs for DC voltage monitoring VI. mA inputs for DC current monitoring VII. mA input spare VIII. mA input spare & min 4 spares for purchaser use. 1. RTD sensor, PT100 inputs min 4 spares for purchaser use.		
11.9.3	Binary Input & Binary Output	The Protection Binary input & Binary output signals shall be provided based on CRP panels, Transformers, NIFPS, AC/DC Distributions, Battery, Chargers, etc signals as per scheme and site requirements.		
11.10	**Binary Input signals of CRP Panel Line, Transformer, Bus coupler, Capacitor**			
Binary Inputs	**Line Feeder**	**Transformer Feeder**	**Bus Coupler Feeder**	**Capacitor Feeder**
11.10.1	CB OFF status	CB OFF status	CB OFF status	CB OFF status
11.10.2	CB ON status	CB ON status	CB ON status	CB ON status
11.10.3	86 1/2 Optd	86 1/2 Optd	86 1/2 Optd	86 1/2 Optd
11.10.4	TCS-1 Healthy	TCS-1 Healthy	TCS-1 Healthy	TCS-1 Healthy
11.10.5	TCS-2 Healthy	TCS-2 Healthy	TCS-2 Healthy	TCS-2 Healthy
11.10.6	CB Ready	CB Ready	CB Ready	CB Ready
11.10.7	Bay Ready	Bay Ready	Bay Ready	Bay Ready
11.10.8	L/R SW in Remote	L/R SW in Remote	L/R SW in Remote	L/R SW in Remote
11.10.9	89A open status	89A open status	89A open status	89A open status
11.10.10	89A close status	89A close status	89A close status	89A close status
11.10.11	89B open status	89B open status	89B open status	89B open status
11.10.12	89B close status	89B close status	89B close status	89B close status

11.10.13	89L open status	89T open status	Ethernet SW#1 faulty*	89C open status
11.10.14	89L close status	89T close status	Ethernet Sw#2 faulty*	89C close status
11.10.15	89LE ES open status	TMU/AVR relay faulty	spare	Cap bank Door Open Status*
11.10.16	87L relay faulty	87T relay faulty	67/67N-1 relay faulty	87T relay faulty
11.10.17	67/67N relay faulty	67/67N relay faulty	67/67N-2 relay faulty	67/67N relay faulty
11.10.18	86 1/2 Relay faulty	86 1/2 Relay faulty	86 1/2 Relay faulty	86 1/2 Relay faulty
11.10.19	VT MCB Trip/Off	VT MCB Trip/Off	VT MCB Trip/Off	VT MCB Trip/Off
11.10.20	DC Source 1/2 Fail	DC Source 1/2 Fail	DC Source 1/2 Fail	DC Source 1/2 Fail
11.10.21	DC MCB Ckt 1/2 Trip/Off	DC MCB Ckt 1/2 Trip/Off	DC MCB Ckt 1/2 Trip/Off	DC MCB Ckt 1/2 Trip/Off
11.10.22	AC Supply Fail	AC Supply Fail	AC Supply Fail	AC Supply Fail
11.10.23	Ann.Alarm	Ann.Alarm	Ann.Alarm	Ann.Alarm
11.10.24	Ann.Faulty	Ann.Faulty	Ann.Faulty	Ann.Faulty
11.10.25	Ethernet SW#1 faulty *	Ethernet SW#1 faulty*	spare	Cap Bank trouble alarm
11.10.26	spare	spare	spare	spare
11.10.27	And other additional signals as per purchaser requirements during engineering.			
11.11	**Binary outputs CRP Panel Line, Transformer, Bus coupler, Capacitor**			
Binary outputs	**Line Feeder**	**Transformer Feeder**	**Bus Coupler Feeder**	**Capacitor Feeder**
11.11.1	CB Close Command	CB Close Command	CB_ON Command	CB_ON Command
11.11.2	CB Open Command	CB Open Command	CB_OFF Command	CB_OFF Command
11.11.3	89A Close Command	89A Close Command	89A Close Command	89A Close Command
11.11.4	89A Open Command	89A Open Command	89A Open Command	89A Open Command
11.11.5	89B Close Command	89B Close Command	89B Close Command	89B Close Command
11.11.6	89B Open Command	89B Open Command	89B Open Command	89B Open Command
11.11.7	89L Close Command	89T Close Command	spare	89C Close Command
11.11.8	89L Open Command	89T Open Command	spare	89C Open Command

11.11.9	86 RESET Command	86 RESET Command	86 RESET Command	86 RESET Command
11.11.10	Ann. Acknowledge Command	Ann. Acknowledge Command	Ann. Acknowledge Command	Ann. Acknowledge Command
11.11.11	Ann. RESET Command	Ann. RESET Command	86 RESET Command	86 RESET Command
11.11.12	spare	spare	spare	spare
11.11.13	And other additional signals as per site requirements.			
11.12	Transformer Main Tank, OLTC, Cooler Control cubicle, BC, ACDB, DCDB, NIFPES, etc and other substation equipments signals as per site requirements on case to case basis.			
11.13	GIS SS: Circuit breaker, Disconnector, Earth switch signal shall be directly wired to RTU for OPEN & CLOSE positions. AIS SS: Circuit breaker signals shall be directly wired to RTU for OPEN & CLOSE positions. Disconnector, Earth switch signals shall be wired to RTU from CRP panel with multiplier aux.relays of CRP panels for OPEN & CLOSE positions. And other additional signals as per purchaser requirements during engineering.			

11.14	**Transformer Monitoring Cum AVR Relay**	
11.14.1	Functions	As per annexure – A.
11.14.2	Requirement	To be provided in Transformer CRP.
11.14.3	**General Conditions**	
11.14.4	The above list all signal, functions of numerical relays is indicative only and number of signals should not be limited to this. Additional signals should be taken during review of actual drawings	

12.0 AUXILIARY RELAYS

12.1	**General Features of Auxiliary Relays**	
12.1.1	Power supply	48 ~ 250V DC/AC universal power supply module as per purchaser requirement.
12.1.2	Voltage ratings	All relays shall be suitable for continuous operations at min.20% over voltage & min.30% under voltage levels as per above rated voltage.
12.1.3	Temperature	-20ºC to +70ºC with humidity working parameters.
12.1.4	Type	Miniature / Numeric / Static types
12.1.5	Aux. Relay contacts make	All auxiliary relays contacts with Nickel cadmium material is preferred. If other material like Silver-Copper-Nickel (Ag-Cu-Ni), etc. used then necessary boot insulation must be provided in order to avoid false operation of contacts. (Engg stage shall

		be decided)	
12.1.6	No ADD-ON block	No ADD-ON Block should be used to meet additional contacts.	
12.1.7	Auxiliary relay details	Aux.Relays	Self RESET aux.relays with Indication LED/Flag as per purchaser requirements.
		Master Trip relay	Both Electrical RESET and Hand RESET types.
		Bistable Relays	For CB contact multiplication & as per purchaser requirements.
		Time	Operating time ≤ 15ms.
		Resistor	The aux.relay must be provided without external resistor only.
		Spare	2NO+2NC spare contacts wired upto T.Bs for each aux.relays.
12.1.8	Insulation resistance	Insulation resistance of min.100MΩ between output contact and contactor for 500V dc IR test for 60sec.	
12.1.9	Dielectric	Dielectric strength of relay 500V AC RMS for 60sec between contacts & coil and body shall confirm IEC stds.	
12.1.10	Signal Integration	All signal integration shall only be through NO, NC contact as per site & purchaser requirements.	
12.2	**Auxiliary relays – Panel wise requirement**		
12.2.1	Master Trip relay	To be provided in all panels.	
12.2.2	DC Supervision relay source #1		
12.2.3	DC Supervision relay source #2		
12.2.4	DC fail relay		
12.2.5	AC fail relay		
12.2.6	Trip circuit supervision relay	To be provided in all panels for supervision of two trip coils.	
12.2.7	Aux.relay	All aux.relays must be provided with actual NO,NC contacts only and without ADD ON BLOCK contacts.	
12.2.8	Aux.relay characteristics	The aux.relays must be provided without external resistor for supervision, contact multiplication, lockout relays, trip circuit supervision, etc.	
12.2.9	VT selection relays	To be provided in all panels as per BSES requirement.	
12.2.10	Sync check relay	This sync check relay shall be provided in addition to sync function at to Bay control & protection relay (BCPU). If Main protections relay it's consist of voltage analog module and serve sync check function, then separate sync relay shall be avoided.	
12.3	**Voltage Monitor Relay (VMR)**		

12.3.1	Aux.Volt& Measurement inputs	Aux.Voltage: 24 ~ 240V dc, UV, OV Measuring input: 0 -600V AC/DC, 1 C/O, RS485/RTU, LED Display
12.3.2	Voltage Monitor Relay (VMR)	DC (+Ve) or (-Ve) voltage shall be monitored for each CRP panel DC distribution ckts and report in case of UV/OV values exceeds set limits.
12.3.3	Reporting signal	The relay shall be provided with 2NO, 2NC along with RS485 communication for reporting to RTU modules (Analog/Digital).
12.4	**Earth Leakage Relay(ELR)**	
12.4.1	Aux.Volt& Measurement inputs	Aux.Voltage: 20 ~ 230V AC/DC, UV, OV Measuring input: 48Vdc, 110Vdc, 220Vdc Contacts: 2NO+2NC, Flush current set: 5~40mA, Time : 1~15sec.
12.4.2	Earth Leakage Relay(ELR)	The ELR leakage current range of upto ≥50mA. (min. Earth leakage 5mA~50mA) and report in case of Earth leakage current exceeds set limits. The DC leakage tested by +Ve or –Ve to Earth with set time limit of operation for alarm/trip as per requirements.
12.5	Transformer Aux.Relays	Auxiliary relays with indicating flags/LEDs (contactors not accepted) should be provided in transformer panel for the following trip and alarm commands 1. Buchholz trip 2. OSR Trip 3. PRV trip 4. WTI HV Trip 5. WTI LV Trip 6. OTI Trip 7. MOG Alarm 8. SPR Trip 9. NIFPS Trip 10. Buchholz Alarm 11. OTI Alarm 12. WTI HV Alarm 13. WTI LV Alarm 14. OLTC PRV Trip 15. OLTC OSR Trip 16. OLTC MOG Alarm As per TRF.Signals / Site requirements aux.relay 03 nos spare need to be provided by vendor.
12.6	Temperature / Tap position indicator	OTI, WTI(HV/LV), TPI indicator shall be provided in Transformer Feeder CRP panels.
12.7	Transformer Aux.Relays spare contacts	All Transformer trouble relays shall be provided additionally with 2 NO and 2 NC contact as spare. Also 3 nos aux.relays shall be wired as spare in panel for future use.
12.8	Operational Data	Bidder shall provide the reference list of the type of relays offered.
12.9	Push button	Push button with suitable rating must be provided for RESET necessary equipments like Annunicator (Accept/RESET buttons), Master trip & wherever needs as per BSES requirements.
12.10	**CB SF6 Gas**	**CB SF6 GAS Low/Lock Aux.relays requirements**
12.10.1	SF6 Low & SF6	To be provided in all 66/33kV control and relay panels.

	Lockout relay	The SF6 Lock out aux.relays contact shall make/break the negative side of the respective circuit breaker close/trip coils for avoiding unwanted commands from SCADA/Local operations team.

13.0 SYNCH CHECK PHILOSPHY

Sl no	Heading	Function description
13.1	Dead Bus – Live Line	(a) Application - Required for Charging of Bus from Line Supply (b) Logic - Sync check relay installed on line panel will check the line and bus voltage and derive that the line is live and bus is in dead condition i.e bus has to be charged by the line breaker. Hence Sync check relay will allow the line breaker to close in this condition.
13.2	Dead Line – Live Bus	(a) Application - Required for Charging of Line from Bus Supply. (b) Logic - Sync check relay installed on line panel will check line and bus voltage and derive that the line is dead and bus is in live condition i.e line has to charged from bus. Hence Sync check relay will allow the line breaker to close in this condition.
13.3	Live Bus – Live Line	(a) Application - Required for paralleling of bus and line supply. (b) Logic - Sync check relay installed on line panel will compare magnitude and phase sequence of line and bus voltages. If the variations are within the range set in the relay, sync check relay will allow the closing of line breaker.
13.4	Live Bus – Dead Bus	(a) Application – Required for charging of dead bus through another live bus. (b) Logic – Sync check relay installed on bus coupler/bus section panel will check voltage of both buses and derive that one bus is dead and other bus is live i.e dead bus is being charged from live bus. Hence Sync check relay will allow the bus coupler/bus section breaker to close in this condition.
13.5	Live Bus – Live Bus	(a) Application – Required for paralleling of two buses/bus sections. (b) Logic – Sync check relay installed on bus coupler/bus section panel will compare the magnitude and phase sequence of voltage of both buses (and bus sections). If the variations are within the range set in the relay, sync check relay will allow the bus coupler/bus section breaker to close.

14.0 MANAGED ETHERNET SWITCH

Sl no	Heading	Function description
14.1	**Ethernet Switch**	
14.1.1	Numbers	Two or more as per site requirements with 20% redundancy of switch.
14.1.2	FO Port (Downlink)	Minimum 24 nos i. FO:20 nos LC,1310nm, multimode, 100 Mbit/s. ii. RJ45:4nos(CAT VI usable) Ethernet port copper, 1310nm,100 Mbits/s.
14.1.3	FO Port (Uplink)	SFP type : Minimum 2 Nos, 1000 Mbits/s.
14.1.4	RJ 45 Port (Uplink)	SFP type : Minimum 2 Nos, 1000 Mbits/s.
14.1.5	Network Protocol	PRP, HSR compatibility.
14.1.6	Coating	Conformal type.
14.1.7	Power Supply	48-240V DC, 180 ~ 260 V AC, dual source power. Universal power supply module with less power consumptions.
14.1.8	ETH Grade	Industrial Layer 2 type.
14.1.9	ETH Module	Ethernet Switch shall be Universal Modular type
14.1.10	Certification	KEMA,CE & FCC & IEC 61850 compliance.
14.1.11	Operating Temperature	-40ºC to +70ºC.
14.1.12	Storage Temperature	-40ºC to +85ºC.
14.1.13	Relative Humidity	5 to 95%
14.1.14	Placement type	Protection Panel / RTU panel Power supply – Modular Type Ethernet switch – Modular Type
14.1.15	Blinking LED Indicators	On each FO/RJ45 ports.
14.1.16	Maintenance /console Part	Required.
14.1.17	Latency	Less than or equal to 10 ms.
14.1.18	Fiber Optic Compatibility	Multimode, 1310 nm as per SCADA requirements.
14.1.19	Fiber Optics/ RJ45 comm. Cables/cords	As per scheme requirements.
14.1.20	Connection: PRP type	Ref: ANNEXURE – D SCADA Architecture SLD as per RTU/SCADA specifications.
14.1.21	Cyber security	Refer cyber security as specified in CRP specifications
14.1.22	Wavelength	1310 nm as per SCADA requirements.
14.1.23	Ethernet RJ45 Cable Type	CAT VI.

14.1.24	Associated Connectors and Accessories	As per customer requirements and shall be verified during engineering stage.

15.0 ANNUNCIATION

Sl no	Heading	Function description
15.1	Type	Static type/Numerical type along with alarm. Annunciations shall be repetitive type and shall be capable of registering the fleeting signal. Fascia test facility should also be provided.
15.2	Power	Universal power supply 24 ~ 240V DC/AC.
15.3	Ann. push button	Potential isolation of all electrical circuits, with Indication lamps TEST, ACKNOWLEDGE, RESET buttons.
15.4	Temperature	-20°C to +70°C with humidity 75% relative humidity.
15.5	Power consumption	≤ 2.0W.
15.6	Mounting	Flush mounted.
15.7	Electromagnetic compatibility	Noise immunity, Noise irradiation as per IS/IEC std.
15.8	Wiring	Announciator must have provision for inversion of Input signal High/Low as per control/protection requirements without affecting external wiring connections.
15.9	Fascia Window	Minimum 24 windows , 30x30mm, Size Type: 3D, Trip Facia:RED, NonTrip Facia:Yellow, Factory set Seq.Manual Reset"M", AC&DC Fail in Last two windows with RS485/TCP IP Modbus communication.

Reference signal list:- Finalized during detailed engineering.

Line	Transformer	Bus Coupler	Capacitor
M1FP Fail	M1PTP Fail	M1BCP Fail	M1CBP Fail
M1FP Trip	M1PTP Trip	M1BCP Trip	M1CBP Trip
M2FP Fail	M2PTP Fail	M2BCP Fail	M2CBP Fail
M2FP Trip	M2PTP Trip	M2BCP Trip	M2CBP Trip
86.1& 86.2 Optd	86.1& 86.2 Optd	86.1& 86.2 Optd	86.1& 86.2 Optd
TCS 1&2 Faulty	TCS 1&2 Faulty	TCS 1&2 Faulty	TCS 1&2 Faulty
CB Trouble alarm	CB Trouble alarm	CB Trouble alarm	CB Trouble alarm
VT MCB Off/Trip/VT Fail	VT MCB Off/Trip/VT Fail	VT MCB Off/Trip/VT Fail	VT MCB Off/Trip/VT Fail
VT Fuse Fail	VT Fuse Fail	VT Fuse Fail	VT Fuse Fail
87L Comm. Channel # 1 Faulty	OLTC Trouble alarm	Ethernet SW#1 faulty *	Cap.Bank alarm
87L Comm. Channel # 2 Faulty	OLTC DM drive Trip	Ethernet SW#2 faulty *	spare

	86.1, 86.2 Fail	86.1, 86.2 Fail	86.1, 86.2 Fail	86.1, 86.2 Fail
	spare	spare	spare	spare
	UV/OV/BRC Alarm	OTI Alarm	LV REF Trip	Ethernet SW#1 faulty *
	Ethernet SW#1 faulty *	OTI Trip	spare	spare
	DC ckt-1 MCB off/trip	WTI HV/LV Alarm	DC ckt-1 MCB off/trip	DC ckt-1 MCB off/trip
	DC ckt-2 Fail MCB off/trip	WTI HV/LV Trip	DC ckt-2 Fail MCB off/trip	DC ckt-2 Fail MCB off/trip
	DC supply fail	TRF MOG Alarm	DC supply fail	DC supply fail
	AC supply fail	OLTC MOG Alarm	AC supply fail	AC supply fail
	spare	Buchholz Alarm	spare	spare
	spare	Buchholz Trip	spare	spare
	spare	TRF PRV Trip	spare	spare
	spare	TRF OSR / SPR / RPRR Trip	spare	spare
	spare	OLTC PRV Trip	spare	spare
	NA	OLTC OSR / SPR / RPRR Trip	NA	NA
	NA	NIFPS Optd	NA	NA
	NA	TMU/AVR relay Fail	NA	NA
	NA	TMU/AVR relay Trip	NA	NA
	NA	DC ckt-1 MCB off/trip	NA	NA
	NA	DC ckt-2 Fail MCB off/trip	NA	NA
	NA	DC supply fail	NA	NA
	NA	AC supply fail	NA	NA
	Other Ann. Window's spare shall be wired upto terminals.			

15.10	Others	Hooter & Bell shall be provided as per IS/IEC std. Provision for hooter out of service shall needs to be provided.
15.11	Potential Free contacts	To be provided for event logger.
15.12	Overall Dimension of Group	To be Provided by Vendor.
15.13	Operation of windows	Sequence of operation of the annunciator shall be as follows.

		Alarm Condition	Fault Contact	Visual Annunciation	Audible Annunciation
	1	Normal	OPEN	OFF	OFF

	2	Abnormal	CLOSE	FLASHING	ON
	3	Accept	CLOSE	STEADY ON	OFF
	4	Return to normal	OPEN	STEADY ON	OFF
	5	Reset	OPEN	OFF	OFF
	6	Reset before return to normal	CLOSE	FLASHING	ON

16.0 INSTRUMENTS

Sl no.	Heading	Function Description
16.1	**MULTIFUNCTION METER (MFM)**	
16.2	Power measurements	To extend the current / voltage / active and reactive power / power factor, etc to RTU, MFM to be installed in CRP/SWGR panels individually for each feeder/ breaker and should be integrated with RTU. Ref Annexure A – SCADA Signal list for MFM measurement signal list in SCADA specifications.
16.3	Auxiliary Supply	Universal power supply 24 ~ 240V DC/AC as per site system voltage conditions.
16.4	Communication	The output of these meters (in groups of 5) connections should be made using twisted pair screened cable (Typically 22 Gauge Belden 8761 or equivalent) & two wires (A and B) connections are daisy chained together and integrated with RTUs.
16.5	Modbus Protocol.	RS485/TCP IP rear port suitable for integration on Modbus Protocol.
16.6	Configuration	All hardware's or protocol converters for having MODBUS protocol output, CT & PT wirings to MFMs as per CRP scheme drawings and it's configuration should be in vendor's scope.
16.7	Surge protection	For the protection of MFMs and RTU cards against surges and electrical leakages, it is necessary to install Surge Protection Devices in between RTU and MFM serial loops. The typical diagram for this connection is mentioned in the SYSTEM ARCHITECHTURE DIAGRAM.
16.8	SCADA Interfacing	RS485/TCP IP rear port suitable for integration on Modbus Protocol. All measurement signal integration of MFM meter shall be compatible according to RTU/SCADA requirements.
16.9	Size	96x96 mm.
16.10	Panels where to be provided	All panels.
16.11	Accuracy Class	0.2S.

16.12	Energy meter provision	Energy meter is not in supplier's scope. Only space and CT/VT wiring is to be provided in all panels except bus coupler and bus VT. Space shall be 350 mm (H) x200 mm (W) for flush mounting meter with holes for meter connection, wiring which shall be decided during Engineering.
16.13	**MULTI-FUNCTION METER MEASUREMENT PARAMETERS**	
16.13.1	Parameter #1	Phase Voltages (L1-N, L2-N, L3-N)
16.13.2	Parameter #2	Line Voltages (L1-L2, L2-L3, L1-L3)
16.13.3	Parameter #3	Line Currents (IL1, IL2, IL3)
16.13.4	Parameter #4	Active Power
16.13.5	Parameter #5	Reactive Power
16.13.6	Parameter #6	Maximum Demand (KW)
16.13.7	Parameter #7	Frequency
16.13.8	Parameter #8	Power Factor
16.13.9	Parameter #9	Active Energy
16.13.10	Parameter #10	Reactive Energy
16.13.11	Parameter #11	THD mean current
16.13.12	Parameter #12	THD mean voltage
16.13.13	Parameter #13	Neutral current
16.13.14	Parameter #14	Phase Angles
16.13.15	Other	Other parameters as per BSES requirements
16.14	Type/Model/ VA Burden	To be Provided by Vendor & approved by purchaser.
16.15	Multifunction Meter	Digital type with programmable ratio.
16.16	**Approved Make**	**Rishabh [RISH 3440], Schneider [Conserv EM 4000NG]**

17.0 INDICATIONS

Sl no	Heading	Function description
17.1	Indicating Lamps	Flush mounted Clustered LED type with rear terminal connections. Lamp Cover to be screwed type an moulded from heat resistant material.
17.2	Breaker On	Red
17.3	Breaker Off	Green
17.4	Isolator Close	Red
17.5	Isolator Open	Green
17.6	Spring Charged	Blue

17.7	CB Ready	Amber
17.8	DC control supply healthy	Amber
17.9	DC Faulty	Red
17.10	AC Faulty	Amber
17.11	Heater circuit healthy	White
17.12	Trip circuit healthy	Yellow
17.13	VT supply	R, Y, B
17.14	Voltage	48-240 Vdc/Vac universal power supply module.
17.15	Rating	To be Provided by Vendor.
17.16	Wattage	To be Provided by Vendor.
17.17	Series Resistance	To be Provided by Vendor.
17.18	Size of lens	To be Provided by Vendor.
17.19	Make	To be Provided by Vendor.
17.20	Type	To be Provided by Vendor.
17.21	Semaphores	Binay or DAV or equivalent. To be Provided by Vendor.
17.22	Make	To be Provided by Vendor.
17.23	Type	To be Provided by Vendor.
17.24	Diameter of the Disc	To be Provided by Vendor.
17.25	Operating voltage	48~250 VDC as per purchaser requirements.
17.26	Burden (Watt DC)	To be Provided by Vendor.
17.27	Whether latch in type or supply Failure type	To be Provided by Vendor.
17.28	Discrepancy Switch	To be Provided by Vendor.

18.0 SELECTOR SWITCHES AND PUSH BUTTONS

Sl no	Heading	Function description
18.1	Switches	Flush Mounted with shrouded terminals.
18.2	TNC Switch	Lockable Pistol Grip type with spring return to normal position.
18.3	Local/Remote [SCADA] selector switch	2 pole. Different colour switch for Breaker / Isolator or Disconnector control switches preferred.
18.4	Rotary On/Off Switches	For CB Test-Service Mode/ Heater ckt / Illumination ckt/ Interlock BY PASS ckt, etc as per site requirements.

18.5	DC Selector switch	DC-1 + OFF + DC-2 as 3 pole selection switch & as per site requirements.
18.6	Ammeter selector switch	Ammeter selection switches shall have make-before-break type contacts so as to prevent open circuiting of CT secondary.
18.7	Voltage selector switches	Voltmeter transfer switches shall be suitable for reading Phase-Neutral, Phase-Phase voltages.
18.8	Rating of switches	16 A.
18.9	Push buttons	Flush Mounted with shrouded terminals.
18.10	Accept Push Button	Flush Mounted Black Color- Trip alarm/DC fail alarm.
18.11	Reset Push Button	Flush Mounted Yellow Color- Trip alarm/DC fail alarm.
18.12	Test Push Button	Flush Mounted Blue Color.
18.13	Rating of Push button	10A.

19.0 CRP PANEL ACCESSORIES

Sl no	Heading	Function description
19.1	Space heaters	Thermostat controlled with switch for isolation & Ind.lamp. Space heaters shall be covered with mesh for safety purpose.
19.2	Voltage	240 V AC.
19.3	Wattage	To be provided by Vendor.
19.4	Thermostat Range / Hygrostat Range	To be provided by Vendor.
19.5	Provided with Individual fuse unit	To be provided by Vendor.
19.6	Power Socket and switch	240V, 5/15A universal type socket to be provided in each panel with on-off switch.
19.7	Test point	The CRP panel front side 65Wx50Hmm size gap cover with suitable dummy plate for accessing must be provided. Additional Power socket (01no) shall be placed rear side accessible. The protection relays test leads, communication cables, power cables of laptop shall be moved freely.
19.8	MCBs and Fuses	Provision for receiving, distribution, isolation and fusing of DC and AC supplies to various control circuits should be made using MCBs, RCDs, RCCBs, ELM and HRC Fuses of appropriate ratings as per purchaser requirements.
19.9	Panel illumination	240V AC illumination lamp controlled by panel door switch to be provided in each panel.

20.0 APPROVED MAKES OF COMPONENTS

Sl no	Heading	Make & Model, Hardware details
20.1	Intelligent Electronic Devices (IED) / Numerical Relays	Relay Model no/Order code/MLFB of latest software & firmware functions must be provided. **(Phased-out relays/Obsolete relays/Relay going to obsolete shall not be acceptable).** Ref: ANNEXURE – D
20.2	**Numerical relays / IEDs makes as follows:**	
20.2.1	GE	P54x/P64x/ Multilin 5th Gen/Agile Series and above
20.2.2	HITACHI ENERGY	REx670 Series and above
20.2.3	SCHNEIDER ELECTRIC	P54x/P64x/ P5 Series and above
20.2.4	SIEMENS	Siprotec 5 Series (modular type) and above
20.2.5	**Managed Ethernet Switch**	Ruggedcom / Hirschman/Moxa
20.3	Auxiliary relay	ABB/ Omron / Schneider / Hitachi Energy/Siemens/GE
20.4	Discrepancy Switch	Multimode
20.5	Meters	AE
20.6	Tri-Vector Meter	Secure
20.7	Multi Function Meter	Rishabh (Rish Delta Energy)
20.8	OTI, WTI, TPI meter	Make to be provided by vendor for prior approvals.
20.9	LIU	Make to be provided by vendor for prior approvals.
20.10	MCBs	Siemens/Schneider/Legrand/ABB.
20.11	Control switches	Switron/Kaycee
20.12	Annunciator	Minilec/Alan.
20.13	Test terminal block	IMP/DAV.
20.14	Terminal blocks	Elmex/Connectwell.
20.15	CRP panel wiring	Polycab/KEI/Finolex/Havells
20.16	Lugs	Dowells/Jaison
20.17	Indication lamps, push Buttons	Siemens/Schneider/Binay.
20.18	CFL	Bajaj / Phillips / Havells
20.19	Semaphore indication	Binay or equivalent to be provided by vendor for approval.
20.20	Managed Ethernet Switch	Ruggedcom / Hirschman/
20.21	Sync check relay	To be provided by vendor for approval.
20.22	DC Voltage Monitor Relay (VMR)	Phoenix/ Voltech.
20.23	DC Earth leakage Monitor (ELM)	Phoenix/ Voltech.
20.24	Stabilizing Resistor	Pentagon or equivalent

20.25	Metrosil	M&I/Siemens or equivalent
20.26	Other devices	if any missed out device needs to meet site requirements must be as per BSES recommendations only.

21.0 DEVIATIONS

Deviation from this specification shall be stated in writing with the tender by reference to the specification clause/ GTP/ Drawing and description of alternative offer. In absence of such a statement, it shall be assumed by the buyer that the seller complies fully with this specification.

22.0 DRAWINGS AND DATA SUBMISSION MATRIX

- ❖ Document checklist for each stage is given in table below. (Refer equipment specification for details)
- ❖ Document check sheet compliance shall be the first sheet for each submission stage i.e. Technical bid, Drawing Approval, Pre Dispatch, Pre closure.
- ❖ No submission is acceptable without check list compliance.
- ❖ Deficient/ improper document/ drawing submission shall be liable for rejection.
- ❖ Order of documents shall be strictly as per the check list with in Soft copy with separate folder in proper nomenclature.
- ➢ Any drawing not included in the below table but necessary for detailed engineering shall be deemed to be included in bidder's scope.

Sl.no	Head	Bid	Drawing Approval	Pre Dispatch	Pre Closure
22.1	Contact Person Name, Email ID and Mobile Number	Required			
22.2	Consolidated Deviation Sheet	Required	Required		
22.3	GTP	Required	Required		
22.4	Type Test as per IS/IEC	Required			
22.5	Manufacturer's quality assurance plan and certification for quality standards		Required		
22.6	Sizing Calculation of Associated Equipment		Required		
22.7	Recommended Spares Apart from spares stated in Spec(for 10 years of operation)		Required		
22.8	Schematic		Required		
22.9	CRP Individual Feeders		Required		
22.10	General Arrangement	Required	Required		
22.11	Sectional Layout		Required		
22.12	Door Layout		Required		
22.13	Panel wise BOQ		Required		
22.14	Index Sheet		Required		
22.15	Symbols		Required		

Sl.no	Head	Bid	Drawing Approval	Pre Dispatch	Pre Closure
22.16	SLD	Required	Required		
22.17	Trip Logic/Matrix		Required		
22.18	AC Distribution Circuit		Required		
22.19	DC Distribution Circuit		Required		
22.20	CT Distribution Circuit		Required		
22.21	VT Distribution Circuit		Required		
22.22	Voltage Selection Circuit		Required		
22.23	Metering Circuit		Required		
22.24	Indication Circuit		Required		
22.25	Isolator Control Circuit		Required		
22.26	Protection Circuit		Required		
22.27	Relay Circuit with BI and BOs		Required		
22.28	BI and BO Sheet of each relay		Required		
22.29	Schematic Circuit diagram and Scheme of Each type of Panel		Required		
22.30	Logic Operation Diagram for CB, ISO, ES, SYNC ckts.		Required		
22.31	Communication Architecture		Required		
22.32	Transformer Monitoring Relay Circuit in case of Transformer Panel		Required		
22.33	CB Closing interlock circuit		Required		
22.34	Tripping relay Circuit		Required		
22.35	CB status &CB trouble multiplication aux.relay circuit		Required		
22.36	Isolator , ES and transformer trouble contact multiplication circuit		Required		
22.37	Annunciation circuit		Required		
22.38	Synch Logic Diagram		Required		
22.39	All Relay SCADA Communication Diagram with FO patch chord lengths		Required		
22.40	Relay Line – Line Communication Architecture in case of Line Differential panel with LIU connection setup		Required		
22.41	Relay's cortec codes with terminals reference circuits		Required		
22.42	Interpanel wiring circuits				
22.43	TB Reference page		Required		
22.44	RTU/SCADA/LCC circuits		Required		
22.45	QAP		Required		
22.46	Inspection Reports			Required	

Sl.no	Head	Bid	Drawing Approval	Pre Dispatch	Pre Closure
22.47	As manufacturing Drawings A3 size Hard copy with each panel			Required	
22.48	Operation and Maintenance Manual			Required	Required
22.49	Trouble shooting manual			Required	Required
22.50	As built Drawings A3 size Hard copy with each panel after commissioning				Required
22.51	Test Report				Required
22.52	Soft Copy				
22.53	In Pen drive/mail/CD/DVD	Required	Required	Required	Required
22.54	Annexure				
22.55	Annexure – A (TMU function)	TRANSFORMER MONITORING UNIT CUM AVR RELAY			
22.56	Annexure – B	GUARANTEED TECHNICAL PARTICULARS			
22.57	Annexure – C	SPARES REQUIREMENT			
22.58	Annexure – D	PROTECTION RELAYS MAKE & MODEL			
22.59	Annexure – E	SINGLE LINE DIAGRAM			

23.0 QUALITY ASSURANCE, INSPECTION & TESTING

Sl no	Heading	Function description
23.1	Vendor quality plan	To be submitted for purchaser approval.
23.2	Type tests	Product must be type tested as per Indian Standards or IEC. Vendor shall be submitting & get approval from BSES team for inspection relevant documents.
23.3	Type test report validity	Last five years from the date of bid submission.
23.4	Acceptance and Routine tests	The documents furnished for details of method of inspection, checking & acceptance standards and results shall be approved by Inspection team of BSES. Any hold points raised, then the supplier shall comply with the remarks made by BSES representative on such reviews with regards to further testing, rectification or rejection, etc.
23.5	Notice to Purchaser for conducting tests	Five weeks in advance.
23.6	Inspection	The supplier to proceed with the work past a hold point only after clearance by purchaser (if any) or a witness waiver letter from BSES.

23.7	Inspection visit	Successful bidder has to bear all factory inspection/testing expenses of Engineer (3 nos) including To & Fro Flight travels, foods, accommodation, lodging & boarding – Minimum 4 Star rated Logde/Hotel (As per Govt.approved list).
23.8	Test reports of acceptance and routine test before dispatch	The vendor supply QR code in two places of CRP panel for SCAN and collecting reports i. Final As Built Drawings(ABD) of each panel. ii. Acceptance & Routine Test reports iii. Quality & Type Test reports iv. Manuals of each device. v. Inspection reports & FAT reports. vi. Numerical relays cortec codes. vii. Sizing calculation of associated equipments. viii. Compliance sheets of each scheme drawing. ix. Material Dispatch clearance certificate (MDCC)
23.9	Deliverable	Hard Copies: ➢ 2 sets : A3 size – Approved Drawing of each panel Protection Dept. ➢ 2 sets : A3 size – As Manufactured Drawings(AMD) after approved drawing of each panel for site execution including inspection comments & correction updated shall be dispatch along with panel. ➢ Final Site review & comments after Site commissioning Red Markup Drawing (RMD) which shall be corrected on supplied drawings by Vendor. ➢ 4 sets : A3 size – Final As Built Drawing(ABD) – with AsBuiltStamp For Projects, Protection Dept, O&M Dept, SCADA Dept,.(After commissioning) ➢ 1 sets : A4 size – CRP Maintenance Manual, Numerical relays each type/model, Aux.relays, Ethernet switches, Meters, Metrosil, Calculation of sizing of various equipments, DC/AC sizing calculations, etc & other devices fixed in panels as per IS/IEC std. Soft Copies: ➢ 2 CD/DVD copy: Final As Built Drawings (ABD) including Autocad / Enggcad files, pdf files. Maintenance manuals in .pdf files. (bidder shall discuss with BSES for actual format of submission of documents). ➢ Numerical relays original software's (latest version)

24.0 PACKING

Sl no	Heading	Function description
24.1	Packing Protection	Against corrosion, dampness, heavy rains, breakage and vibration. During transportation/ transit and storage, panels may be subjected to outdoor conditions. Hence, packing of each panel shall be weatherproof.
24.2	Packing for accessories and spares	Robust wooden non returnable packing case with all the above protection & identification Label.
24.3	Packing Identification Label to be provided on each packing case with the following details.	
24.4	Purchaser's name.	
24.5	PO number (along with SAP item code, if any) & date.	
24.6	Equipment Tag no. (if any)	
24.7	Destination.	
24.8	Project Details.	
24.9	Panel serial number ,Equipment Identification No, Panel Drawing details	
24.10	Manufacturer / Supplier's name.	
24.11	Address of Manufacturer / Supplier / it's agent.	
24.12	Description and Quantity.	
24.13	Country of origin.	
24.14	Month & year of Manufacturing.	
24.15	Case measurements.	
24.16	Gross and net weights in kilograms.	
24.17	All necessary slinging and stacking instructions.	

25.0 SHIPPING

Sl no	Heading	Function description
25.1	**Shipping**	The bidder shall ascertain at an early date and definitely before the commencement of manufacture, any transport limitations such as weights, dimensions, road culverts, Overhead lines, free access etc. from the Manufacturing plant to the project site. Bidder shall furnish the confirmation that the proposed. Packages can be safely transported, as normal or oversize packages, up to the site. Any modifications required in the infrastructure and cost thereof in this connection shall be brought to the notice of the Purchaser.
		On completion of manufacturing the items can be dispatched only after issue of shipping release by the purchaser.
		The seller shall be responsible for all transit damages due to improper packing.

26.0 HANDLING AND STORAGE

Sl no	Heading	Function description
26.1	Handling and Storage	Manufacturer instruction shall be followed. Detail handling & storage instruction sheet / manual needs to be furnished before commencement of supply.

27.0 ABBREVATIONS

Sl No.	Name	Description
27.1	AC	Alternating Current
27.2	DC	Direct Current
27.3	CT	Current Transformer
27.4	VT or PT	Voltage Transformer or Potential Transformer
27.5	SLD	Single Line Diagram
27.6	ICT	Interposing Current Transformer
27.7	CRP	Control & Relay Panel
27.8	BC	Bus Coupler
27.9	Cap.Bank	Capacitor Bank

27.10	LCC	Local Control Cubicle
27.11	RTU	Remote Terminal Unit
27.12	SCADA	Supervisory Control And Data Acquisition
27.13	AIS	Air Insulated Substation
27.14	GIS	Gas Insulated Substation
27.15	SWGR	Switch gear
27.16	OLTC	On Load Tap Changer
27.17	IED	Intelligent Electronic Device
27.18	HMI	Human Machine Interface
27.19	LCD	Liquid Crystal Display
27.20	LED	Light Emitting Diode
27.21	CB	Circuit Breaker
27.22	TNC	Trip Neutral Close
27.23	ES	Earth Switch
27.24	MCB	Miniature Circuit Breaker
27.25	PT100	Platinum Temperature resistance sensor “100” denotes its nominal resistance at “0ºC”.
27.26	PC	Personal Computer
27.27	DM	Derive Mechanism
27.28	Sync	Synchronization
27.29	Dir.OC	Directional Over Current
27.30	Dir.EF	Directional Earth Fault
27.31	Ins.OC	Instantaneous Over Current
27.32	Ins.EF	Instantaneous Earth Fault
27.33	TOC	Time delayed Over Current
27.34	TEF	Time delayed Earth Fault
27.35	SOTF	Switch On To Fault
27.36	REF	Restricted Earth Fault
27.37	BRC	Broken Conductor
27.38	CTS	Current Transformer Supervision
27.39	LBB/BFR	Local Breaker Backup or Breaker Failure
27.40	VOC	Voltage depended over current
27.41	UF	Under Frequency
27.42	OF	Over Frequency
27.43	df/dt	Rate of Change of Frequency
27.44	OV	Over Voltage
27.45	UV	Under Voltage
27.46	VT Fail	Voltage Transformer Fail

27.47	VMR	Voltage Monitoring Relay
27.48	Sync	Synchronization function
27.49	PSB	Power Swing Block
27.50	M1FP	Main-1 Feeder Line Differential Protection
27.51	M2FP	Main-2 Feeder Protection Bay Control & Backup Protection
27.52	M1PTP	Main-1 Power Transformer Differential Protection
27.53	M2PTP	Main-2 Power Transformer Bay Control & Backup Protection
27.54	M1BCP	Main-1 Bus Coupler Fuse fail Protection
27.55	M2BCP	Main-2 Bus Coupler Bay Control & Backup Protection
27.56	M1CBP	Main-1 Capacitor Bank Protection
27.57	M2CBP	Main-2 Capacitor Bank Bay Control & Backup Protection
27.58	AVR	Automatic Voltage Regulator
27.59	TMU	Transformer Monitoring Unit
27.60	TCIV	Transformer Conservator Isolation Valve
27.61	MCB	Miniature Circuit Breaker
27.62	ELR	Earth Leakage Relay
27.63	AI	Analog Input
27.64	BI	Binary Input
27.65	BO	Binary Output
27.66	GPS	Global Positioning System
27.67	IRIG – B	Inter Range Instrumentation Group – B
27.68	USB	Universal Serial Bus
27.69	CAT-VI	Category – 6 [Standardized Twisted Pair cable]
27.70	RS485	Recommended Standard - 485
27.71	PLC	Programmable Logic Controller
27.72	FRTU	Feeder Remote Terminal Unit
27.73	OFC/FOC	Optical Fiber cable / Fiber Optic Cable
27.74	FO	Fiber Optic
27.75	RJ	Registered Jack
27.76	LC	Lucent Connector
27.77	SC	Standard Connector
27.78	ST	Standard Connector with Spring loaded
27.79	ST	Standard Connector with Push In & Twist
27.80	SFP	Small Form-factor Pluggable
27.81	RSTP	Rapid Spanning Tree Protocol
27.82	HSR	High-availability Seamless Redundancy
27.83	PRP	Parallel Redundancy Protocol
27.84	STP	Shielded Twisted Pair

27.85	FTP	Foil Twisted Pair
27.86	NO	Normally Open
27.87	NC	Normally Close
27.88	L/R	Local / Remote
27.89	O/L	Over Load
27.90	QAP	Quality Assurance Plan
27.91	GTP	General Technical Particular
27.92	SO_2	Sulfur Dioxide
27.93	H_2S	Hydrogen Sulfide

1.0 ANNEXURE – A – TRANSFORMER MONITORING UNIT CUM AVR RELAY

Sl no	Heading	Function description
	General features : TMU/AVR Relay Unit	
1.1	Technology and Functionality	Microprocessor based with provision for multifunction control and monitoring.
1.2	Mounting	Rack Mounting.
1.3	Architecture	Hardware and software architecture shall be modular and disconnectable to adapt the control unit to the required level of complexity as per the application.
1.4	Programming and configuration	AVR shall utilize a user friendly setting and operating multi-lingual software in windows environment with menus and icons for fast access to the data required.
1.5	Human Machine Interface	HMI with an alphanumeric key pad and graphical LCD display with backlight indicating measurement values and operating messages. Capability to access and change all settings and parameters.
1.6	PC Interface port	Front port (preferably serial) for configuration using PC. Software and communication cord, required for programming of offered protection relays using PC, shall be mentioned separately in the bid.
1.7	SCADA Interface port	Communication port: 2xLC duplex FO/2xRJ45 copper – SCADA. (shall be decided during detailed engineering)
1.8	Communication protocol	Relays shall be compatible to transfer all AI, BI, BO, Event, DR, etc. for interfacing with SCADA on IEC61850, IEC103 (Data Type-9), IEC104, etc. protocols as per SCADA requirements.
1.9	Self diagnosis	Relay shall be able to detect internal failures and same shall be transmitted to SCADA as a soft signal. A watchdog relay with changeover contact shall provide information about the failure.
1.10	Cable Termination	Termination of cable shall be at rear side.
1.11	Time Synchronization	Relay shall be capable of being synchronized with the system clock through SCADA, PC and GPS.
1.12	Auxiliary supply	48 ~ 240V DC universal type.
1.13	**Inputs and Outputs**	
1.14	Analog Module	Refer Single Line Diagram for details of CT,VT secondary circuit for wiring/communications as per purchaser approved documents.
1.15	Ratio corrections	Software based CT,VT Ratio & Vector corrections feature (Without Interposing CT, other CTs).
		Line/cable capacitive current compensation protection

		functions.
1.16	Analog mA input	Min. 04 nos.
1.17	PT-100 direct input	Min.02 nos
1.18	Direct Resistance Input	For tap position indication. (18 steps)
1.19	Configurable Binary input/outputs	Relays Analog(CT,VT), Analog (mA), RTD inputs, Binary inputs, Binary outputs shall be provided as per scheme requirements with additional 4 BI, 4 BO for future use.
1.20	**Control**	
1.21	Control Tasks	Ability to implement control functions through programmable logics.
1.22	Voltage setting	Programmable Voltage set point.
1.23	Voltage Regulation	Raise/Lower tap position to maintain the preset value of voltage.
1.24	Voltage Regulation modes	Automatic and Manual.
1.25	Operation Modes	Local and Remote.
1.26	Fan and Pump control	To be provided.
1.27	Transformer Paralleling	Capability to parallel transformers whose AVRs are interconnected via a communication network. 1. Master – Follower upto 4 transformers. 2. Minimizing circulating current principle.
1.28	**SCADA Interfacing:** As per SCADA specification & site requirements for OLTC, Transformer trouble of Main Tank, OLTC Tank, Cooler Control system, Temperature monitors (OTI,WTI), Tap positions.	
1.29	**Measurement, Event Recording and Monitoring**	
1.30	Measured Quantities (optional)	Voltage, Current, Active Power, Reactive Power, Apparent Power, Power factor, frequency.
1.31	Event Recording	Facility for recording parameters during various events such as tap change, change in binary input status etc.
1.32	Monitoring	Capability to monitor important transformer parameters such as Oil temperature, Winding Temperature etc and give indication/alarm when the value of a particular parameter exceeds the preset value.

2.0 ANNEXURE- B – GUARANTEED TECHNICAL PARTICULARS

Vendor must submit clause wise compliance against specification at the time of drawing approval clearly highlighting the deviations from specification against each clause.

3.0 ANNEXURE- C – SPARES REQUIREMENT

Sl No.	Description	Unit Rate for each Grid/Substation
3.1	Numerical relay of each type	1 nos.
3.2	Auxiliary relay of each type	3 nos.
3.3	Master trip relay of each type	1 nos.
3.4	Contact multiplication relays (Bi-stable type for CB, VT selection)	6 nos.
3.5	Voltmeter / Ammeter / MFM of each type	1 nos.
3.6	Local/Remote Selector switch	2 nos.
3.7	TNC switch for CB	2 nos.
3.8	TNC switch for Isolators	2 nos.
3.9	Semaphore indicators	2 nos.
3.10	MCB of each rating	1 nos.
3.11	Lugs of each type & rating	300 nos.

Note:

1.0 Spares shall be decided based on site requirements & prior approval required from BSES.

1.1 Remote end Line differential relays shall be checked as separate line items along with PO.

1.2 All spare Numerical relays shall be configured & test report submitted by vendor/OEM before dispatch.

1.3 All spare Numerical relays final configured project file shall be submitted.

4.0 ANNEXURE – D – PROTECTION RELAYS MAKE & MODEL

	66KV, 33KV CONTROL & RELAY PANEL : AIS/GIS SS				
Sl.No	Protection	Hitachi	Siemens	Schneider Electric	GE 5th Gen. Micom / Multilin Agile series
1.	Line Differential protection	RED670	7SL86 / 7SL87	P543	P543
2.	Transformer Differential protection	RET670	7UT85	P643/P642	P643/P642
3.	Bay Control & Backup protection	REC670	7SJ85	C264	P143/F60
4.	Cap.Bank protection	REC670 /RET670	7SJ85	C264	P143/F60
5.	Transformer Monitoring Unit TMU/AVR	RET670	7UT85	ABB :REU615	
Note	Any relay's which is phased out /Obsolete /which is going to Obsolete within 3year duration by OEM's shall be rejected automatically.				

5.0 ANNEXURE – E – SLDs

ANNEXURE–E1

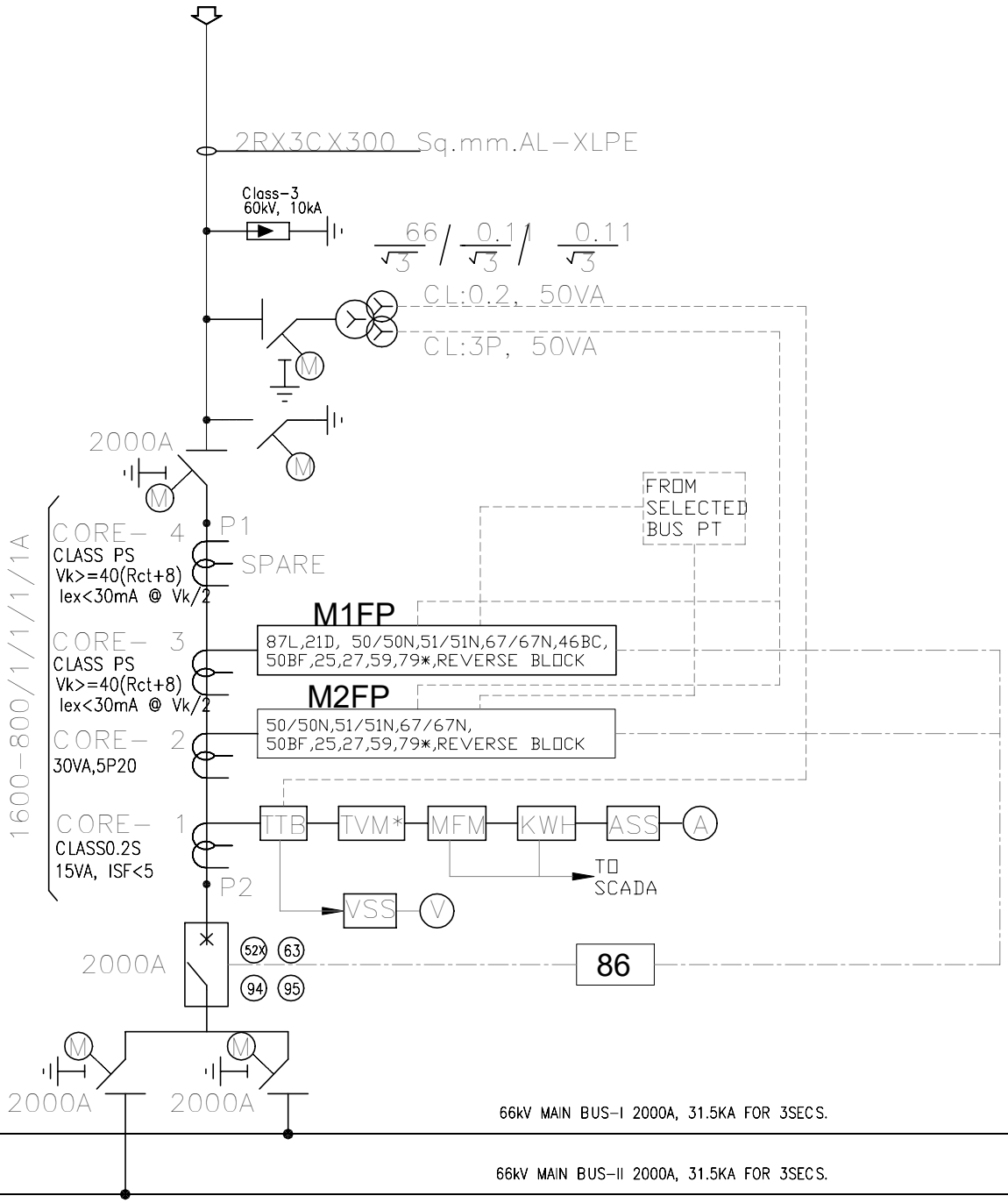

NOTE: 1. REFER SPECIFICATION FOR FUNCTIONAL DETAILS OF PROTECTION RELAYS.
2. TVM IS NOT IN SUPPLIER'S SCOPE.
3. LINE DIFFERENTIAL OR DISTANCE RELAY AS PER CLAUSE 11.5 OF SPECIFICATION
4. BURDENS ARE TENDER PURPOSE ONLY AND MAY CHANGE SUBJECT TO CALCULATIONS DURING DETAILED ENGINEERING.
5. SELECTED VT BASED ON BPT LOGIC FOR PROTECTION AND METERING.
6. THIS DRAWING IS TENTATIVE AND FOR TENDER PURPOSE ONLY.
7. REFER TENDER SPECIFICATION FOR FURTHER DETAILS.

LEGEND

SYMBOL	DESCRIPTION	SYMBOL	DESCRIPTION	SYMBOL	DESCRIPTION
	MOTORISED ISOLATOR WITH ONE E/S		TEST TERMINAL BLOCK		AUTO RECLOSER
	MOTORISED EARTH SWITCH		LINE DIFFRENTIAL PROTECTION		U/V & O/V PROTECTION
	SURGE DIVERTER		DISTANCE PROTECTION		MASTER TRIP RELAY
	CURRENT TRANSFORMER		INS. O/C & E/F PROTECTION		TRIP CIRCUIT SUPERVISION RELAY
	POTENTIAL TRANSFORMER		DIRECTIONAL O/C & E/F PROTECTION		ANTI PUMPING RELAY
	CIRCUIT BREAKER		O/C & E/F PROTECTION		GAS PREASSURE RELAY
	VOLTMETER		BROKEN CONDUCTOR		BREAKER FAILURE PROTECTION
	AMMETER		SYNC CHECK		FUSE FAILURE PROTECTION
	TRIVECTOR METER		CIRCUIT BREAKER CONTACT MULTIPLICATION		

DRAWN	SK
CHECKED	BS
APPD.	AS
DATE	13.08.25
SCALE	NTS

TITLE:– TYPICAL 66KV LINE SLD

BSES

SPEC No – BSES–TS–86–CRP–R1

DWG No.:– SLD–CRP–66KV–01

ANNEXURE–E2

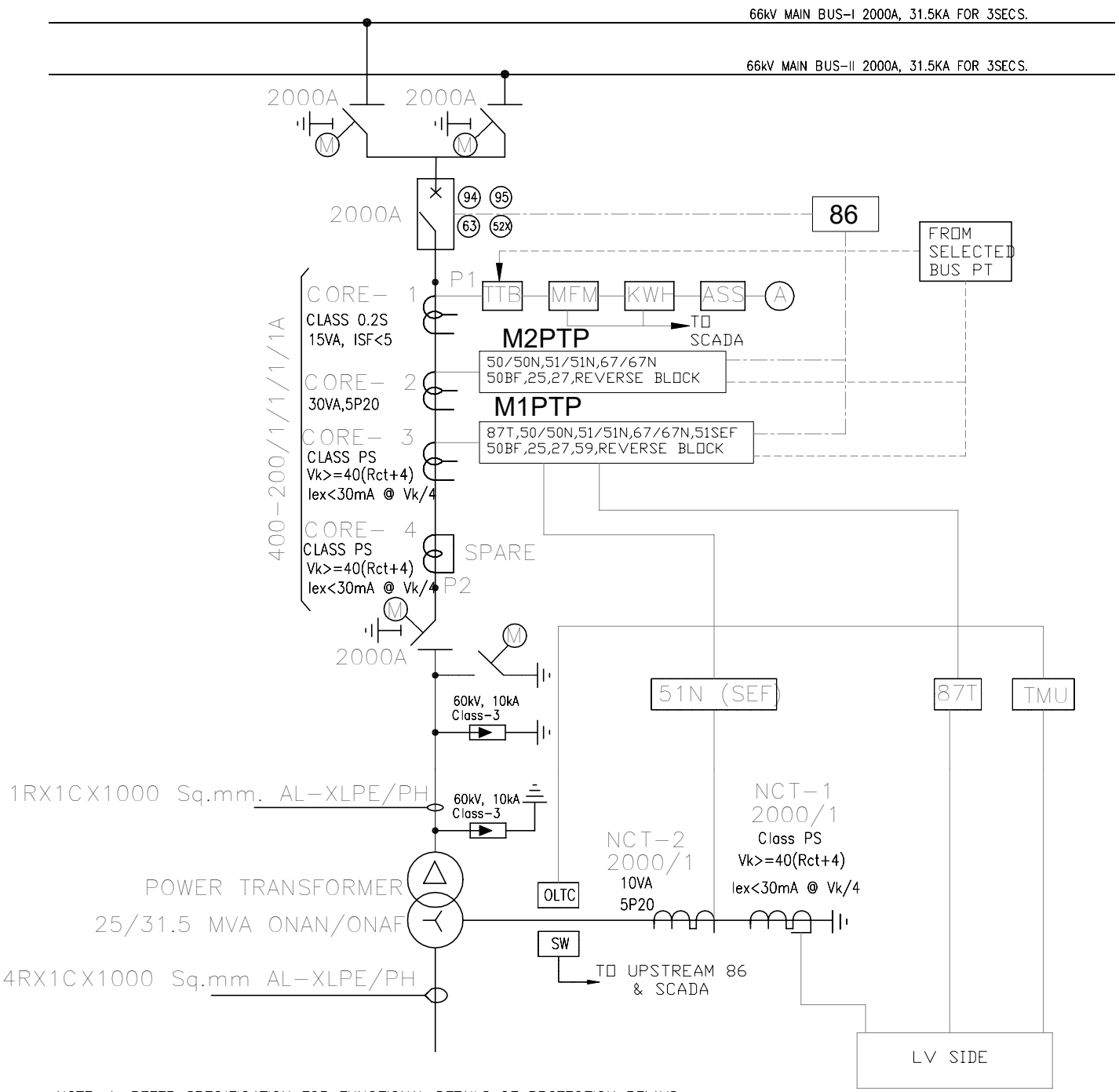

NOTE:
1. REFER SPECIFICATION FOR FUNCTIONAL DETAILS OF PROTECTION RELAYS.
2. TVM IS NOT IN SUPPLIER'S SCOPE.
3. TRF. DIFFERENTIAL RELAY AS PER CLAUSE 11.6 OF SPECIFICATION
4. BURDENS ARE TENDER PURPOSE ONLY AND MAY CHANGE SUBJECT TO CALCULATIONS DURING DETAILED ENGINEERING.
5. SELECTED VT BASED ON BPT LOGIC FOR PROTECTION AND METERING.
6. THIS DRAWING IS TENTATIVE AND FOR TENDER PURPOSE ONLY.
7. REFER TENDER SPECIFICATION FOR FURTHER DETAILS.

LEGEND

SYMBOL	DESCRIPTION	SYMBOL	DESCRIPTION	SYMBOL	DESCRIPTION
	MOTORISED ISOLATOR WITH ONE E/S		TEST TERMINAL BLOCK		AUTO RECLOSER
	MOTORISED EARTH SWITCH		TRFO. DIFFRENTIAL PROTECTION		U/V & O/V PROTECTION
	SURGE DIVERTER		SENSITIVE E/F PROTECTION		MASTER TRIP RELAY
	CURRENT TRANSFORMER		INS. O/C & E/F PROTECTION		TRIP CIRCUIT SUPERVISION RELAY
	POTENTIAL TRANSFORMER		DIRECTIONAL O/C & E/F PROTECTION		ANTI PUMPING RELAY
	CIRCUIT BREAKER		O/C & E/F PROTECTION		GAS PREASSURE RELAY
	VOLTMETER		BROKEN CONDUCTOR		BREAKER FAILURE PROTECTION
	AMMETER		SYNC CHECK		FUSE FAILURE PROTECTION
	TRIVECTOR METER		CIRCUIT BREAKER CONTACT MULTIPLICATION		

DRAWN	SK	TITLE:– TYPICAL 66KV TRF SLD	BSES
CHECKED	BS		
APPD.	AS		SPEC No – BSES–TS–86–CRP–R1
DATE	13.08.25		
SCALE	NTS		DWG No.:– SLD–CRP–66KV–01

ANNEXURE–E3

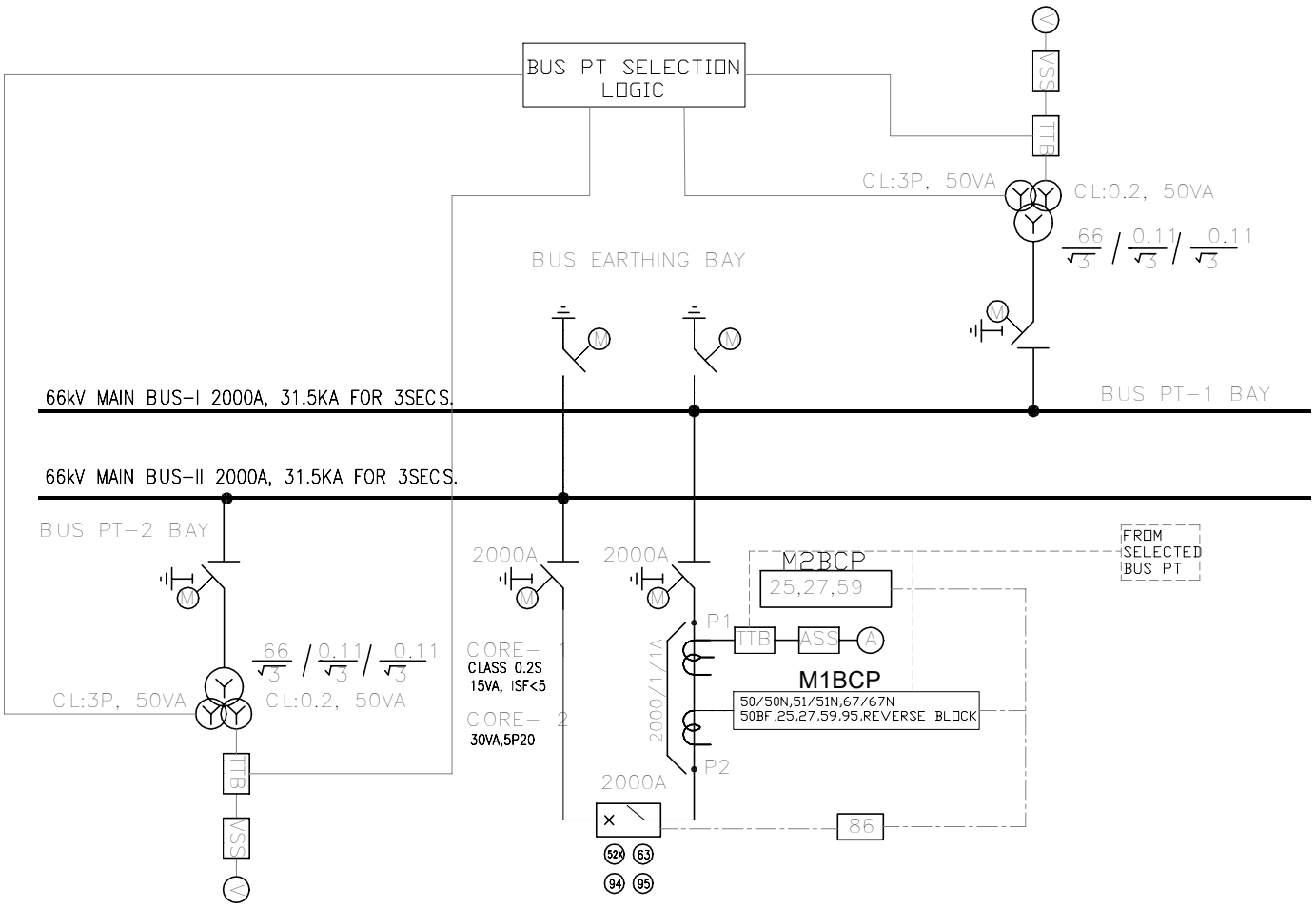

NOTE:
1. REFER SPECIFICATION FOR FUNCTIONAL DETAILS OF PROTECTION RELAYS.
2. TVM IS NOT IN SUPPLIER'S SCOPE.
3. BUS COUPLER OVER CURRENT AND EARTH FAULT RELAY AS PER CLAUSE 11.7 OF SPECIFICATION
4. BURDENS ARE TENDER PURPOSE ONLY AND MAY CHANGE SUBJECT TO CALCULATIONS DURING DETAILED ENGINEERING.
5. SELECTED VT BASED ON BPT LOGIC FOR PROTECTION AND METERING.
6. THIS DRAWING IS TENTATIVE AND FOR TENDER PURPOSE ONLY.
7. REFER TENDER SPECIFICATION FOR FURTHER DETAILS.

LEGEND

SYMBOL	DESCRIPTION	SYMBOL	DESCRIPTION	SYMBOL	DESCRIPTION
	MOTORISED ISOLATOR WITH ONE E/S		TEST TERMINAL BLOCK		
	MOTORISED EARTH SWITCH				U/V & O/V PROTECTION
	SURGE DIVERTER				MASTER TRIP RELAY
	CURRENT TRANSFORMER		INS. O/C & E/F PROTECTION		TRIP CIRCUIT SUPERVISION RELAY
	POTENTIAL TRANSFORMER		DIRECTIONAL O/C & E/F PROTECTION		ANTI PUMPING RELAY
	CIRCUIT BREAKER		O/C & E/F PROTECTION		GAS PREASSURE RELAY
	VOLTMETER		FUSE FAILURE PROTECTION		BREAKER FAILURE PROTECTION
	AMMETER		SYNC CHECK		
	TRIVECTOR METER		CIRCUIT BREAKER CONTACT MULTIPLICATION		

DRAWN	SK	TITLE:– TYPICAL 66KV BC SLD	BSES
CHECKED	BS		SPEC No. – BSES–TS–86–CRP–R1
APPD.	AS		
DATE	13.08.25		DWG No.:– SLD–CRP–66KV–01
SCALE	NTS		

ANNEXURE–E4

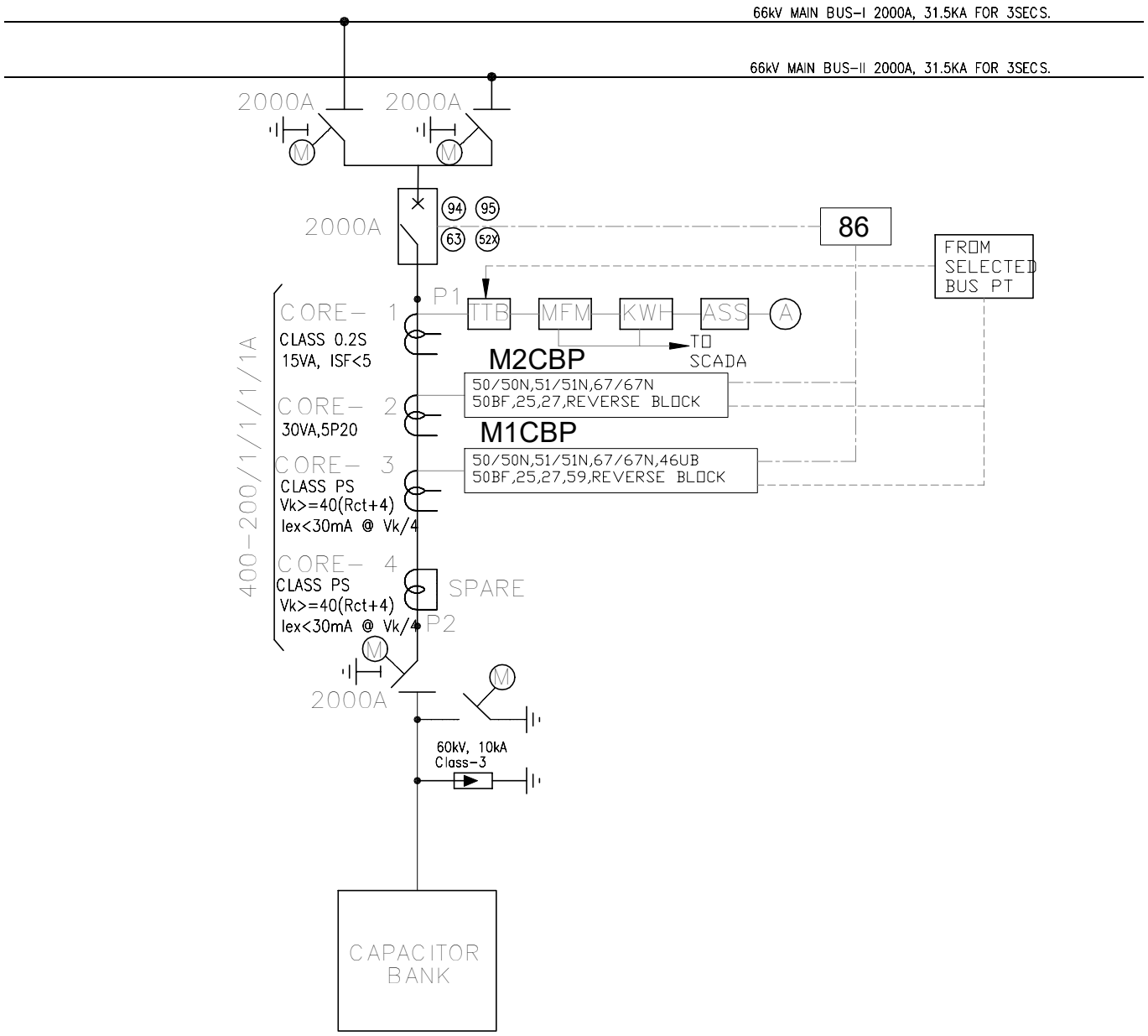

NOTE:
1. REFER SPECIFICATION FOR FUNCTIONAL DETAILS OF PROTECTION RELAYS.
2. TVM IS NOT IN SUPPLIER'S SCOPE.
3. CAPACITOR PROTECTION RELAY AS PER CLAUSE 11.8 OF SPECIFICATION
4. BURDENS ARE TENDER PURPOSE ONLY AND MAY CHANGE SUBJECT TO CALCULATIONS DURING DETAILED ENGINEERING.
5. SELECTED VT BASED ON BPT LOGIC FOR PROTECTION AND METERING.
6. THIS DRAWING IS TENTATIVE AND FOR TENDER PURPOSE ONLY.
7. REFER TENDER SPECIFICATION FOR FURTHER DETAILS.

LEGEND

SYMBOL	DESCRIPTION	SYMBOL	DESCRIPTION	SYMBOL	DESCRIPTION
	MOTORISED ISOLATOR WITH ONE E/S		TEST TERMINAL BLOCK		
	MOTORISED EARTH SWITCH		OUT OF BALANCE PROTECTION		U/V & O/V PROTECTION
	SURGE DIVERTER		FREQUENCY PROTECTION		MASTER TRIP RELAY
	CURRENT TRANSFORMER		INS. O/C & E/F PROTECTION		TRIP CIRCUIT SUPERVISION RELAY
	POTENTIAL TRANSFORMER		DIRECTIONAL O/C & E/F PROTECTION		ANTI PUMPING RELAY
	CIRCUIT BREAKER		O/C & E/F PROTECTION		GAS PREASSURE RELAY
	VOLTMETER		FUSE FAILURE PROTECTION		BREAKER FAILURE PROTECTION
	AMMETER		SYNC CHECK		
	TRIVECTOR METER		CIRCUIT BREAKER CONTACT MULTIPLICATION		

DRAWN	SK	TITLE:– TYPICAL 66KV CAP SLD	BSES
CHECKED	BS		
APPD.	AS		SPEC No – BSES–TS–86–CRP–R1
DATE	13.08.25		
SCALE	NTS		DWG No.:– SLD–CRP–66KV–01

ANNEXURE–E5

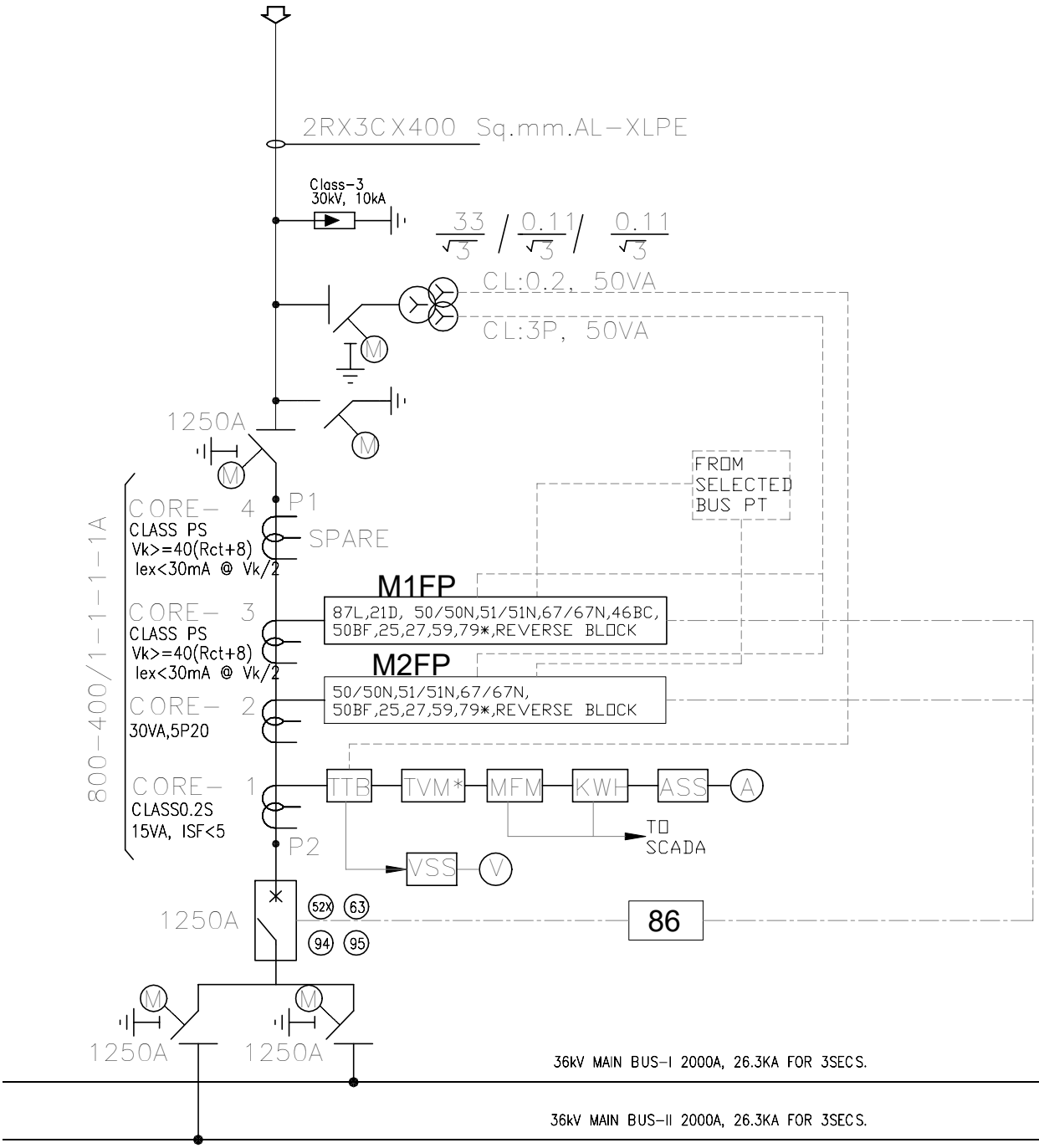

NOTE:
1. REFER SPECIFICATION FOR FUNCTIONAL DETAILS OF PROTECTION RELAYS.
2. TVM IS NOT IN SUPPLIER'S SCOPE.
3. LINE DIFFERENTIAL OR DISTANCE RELAY AS PER CLAUSE 11.5 OF SPECIFICATION
4. BURDENS ARE TENDER PURPOSE ONLY AND MAY CHANGE SUBJECT TO CALCULATIONS DURING DETAILED ENGINEERING.
5. SELECTED VT BASED ON BPT LOGIC FOR PROTECTION AND METERING.
6. THIS DRAWING IS TENTATIVE AND FOR TENDER PURPOSE ONLY.
7. REFER TENDER SPECIFICATION FOR FURTHER DETAILS.

LEGEND

SYMBOL	DESCRIPTION	SYMBOL	DESCRIPTION	SYMBOL	DESCRIPTION
	MOTORISED ISOLATOR WITH ONE E/S		TEST TERMINAL BLOCK		AUTO RECLOSER
	MOTORISED EARTH SWITCH		LINE DIFFRENTIAL PROTECTION		U/V & O/V PROTECTION
	SURGE DIVERTER		DISTANCE PROTECTION		MASTER TRIP RELAY
	CURRENT TRANSFORMER		INS. O/C & E/F PROTECTION		TRIP CIRCUIT SUPERVISION RELAY
	POTENTIAL TRANSFORMER		DIRECTIONAL O/C & E/F PROTECTION		ANTI PUMPING RELAY
	CIRCUIT BREAKER		O/C & E/F PROTECTION		GAS PREASSURE RELAY
	VOLTMETER		BROKEN CONDUCTOR		BREAKER FAILURE PROTECTION
	AMMETER		SYNC CHECK		FUSE FAILURE PROTECTION
	TRIVECTOR METER		CIRCUIT BREAKER CONTACT MULTIPLICATION		

DRAWN	SK	TITLE:– TYPICAL 33KV LINE SLD	BSES
CHECKED	BS		
APPD.	AS		SPEC No – BSES–TS–86–CRP–R1
DATE	13.08.25		
SCALE	NTS		DWG No.:– SLD–CRP–33KV–01

ANNEXURE–E6

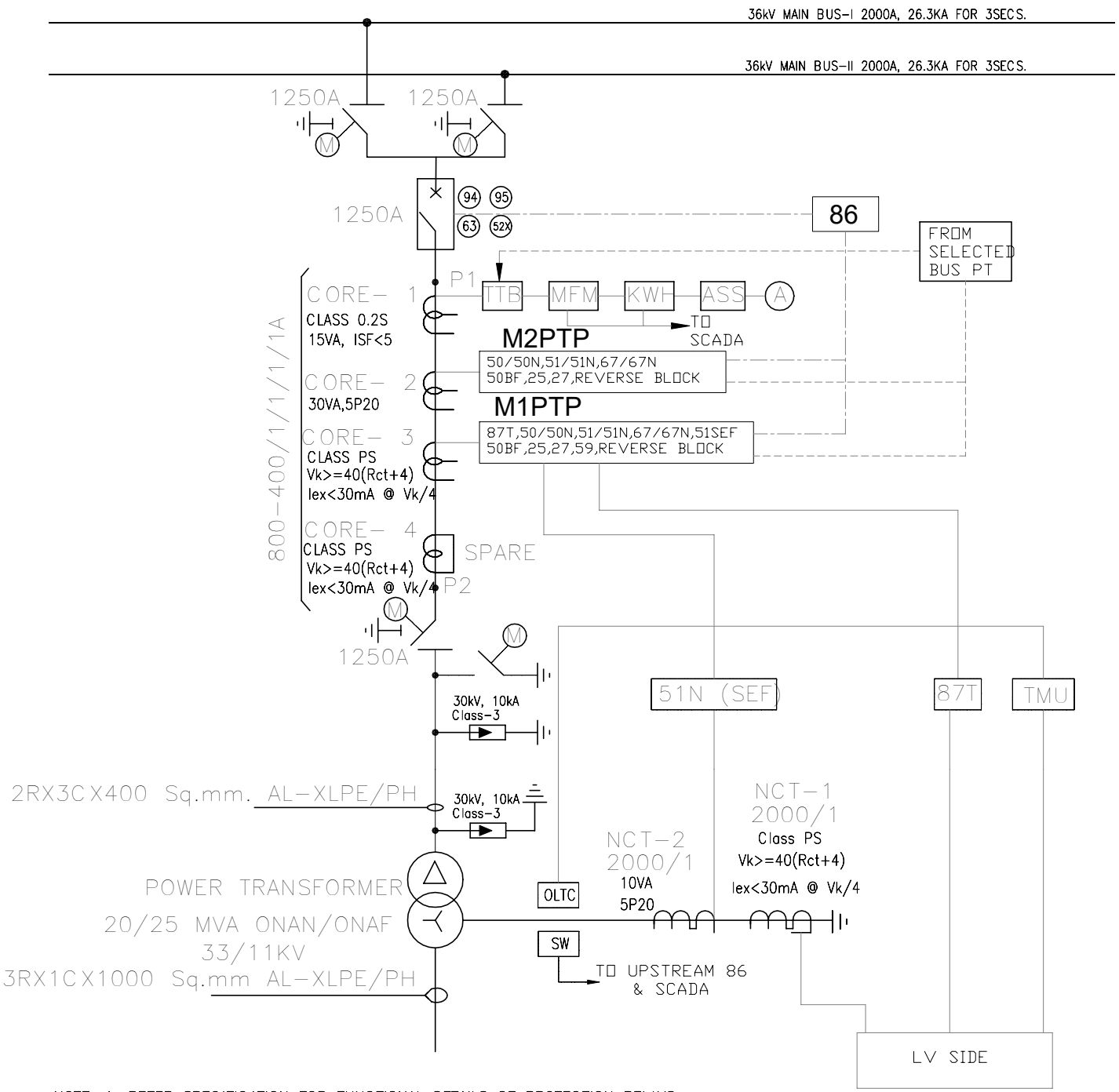

NOTE: 1. REFER SPECIFICATION FOR FUNCTIONAL DETAILS OF PROTECTION RELAYS.
2. TVM IS NOT IN SUPPLIER'S SCOPE.
3. TRF. DIFFERENTIAL RELAY AS PER CLAUSE 11.6 OF SPECIFICATION
4. BURDENS ARE TENDER PURPOSE ONLY AND MAY CHANGE SUBJECT TO CALCULATIONS DURING DETAILED ENGINEERING.
5. SELECTED VT BASED ON BPT LOGIC FOR PROTECTION AND METERING.
6. THIS DRAWING IS TENTATIVE AND FOR TENDER PURPOSE ONLY.
7. REFER TENDER SPECIFICATION FOR FURTHER DETAILS.

LEGEND

SYMBOL	DESCRIPTION	SYMBOL	DESCRIPTION	SYMBOL	DESCRIPTION
	MOTORISED ISOLATOR WITH ONE E/S		TEST TERMINAL BLOCK		AUTO RECLOSER
	MOTORISED EARTH SWITCH		TRFO. DIFFRENTIAL PROTECTION		U/V & O/V PROTECTION
	SURGE DIVERTER		SENSITIVE E/F PROTECTION		MASTER TRIP RELAY
	CURRENT TRANSFORMER		INS. O/C & E/F PROTECTION		TRIP CIRCUIT SUPERVISION RELAY
	POTENTIAL TRANSFORMER		DIRECTIONAL O/C & E/F PROTECTION		ANTI PUMPING RELAY
	CIRCUIT BREAKER		O/C & E/F PROTECTION		GAS PREASSURE RELAY
	VOLTMETER		BROKEN CONDUCTOR		BREAKER FAILURE PROTECTION
	AMMETER		SYNC CHECK		FUSE FAILURE PROTECTION
	TRIVECTOR METER		CIRCUIT BREAKER CONTACT MULTIPLICATION		

DRAWN	SK	TITLE:– TYPICAL 33KV TRF SLD	BSES
CHECKED	BS		
APPD.	AS		SPEC No – BSES–TS–86–CRP–R1
DATE	13.08.25		
SCALE	NTS		DWG No.:– SLD–CRP–33KV–01

ANNEXURE–E7

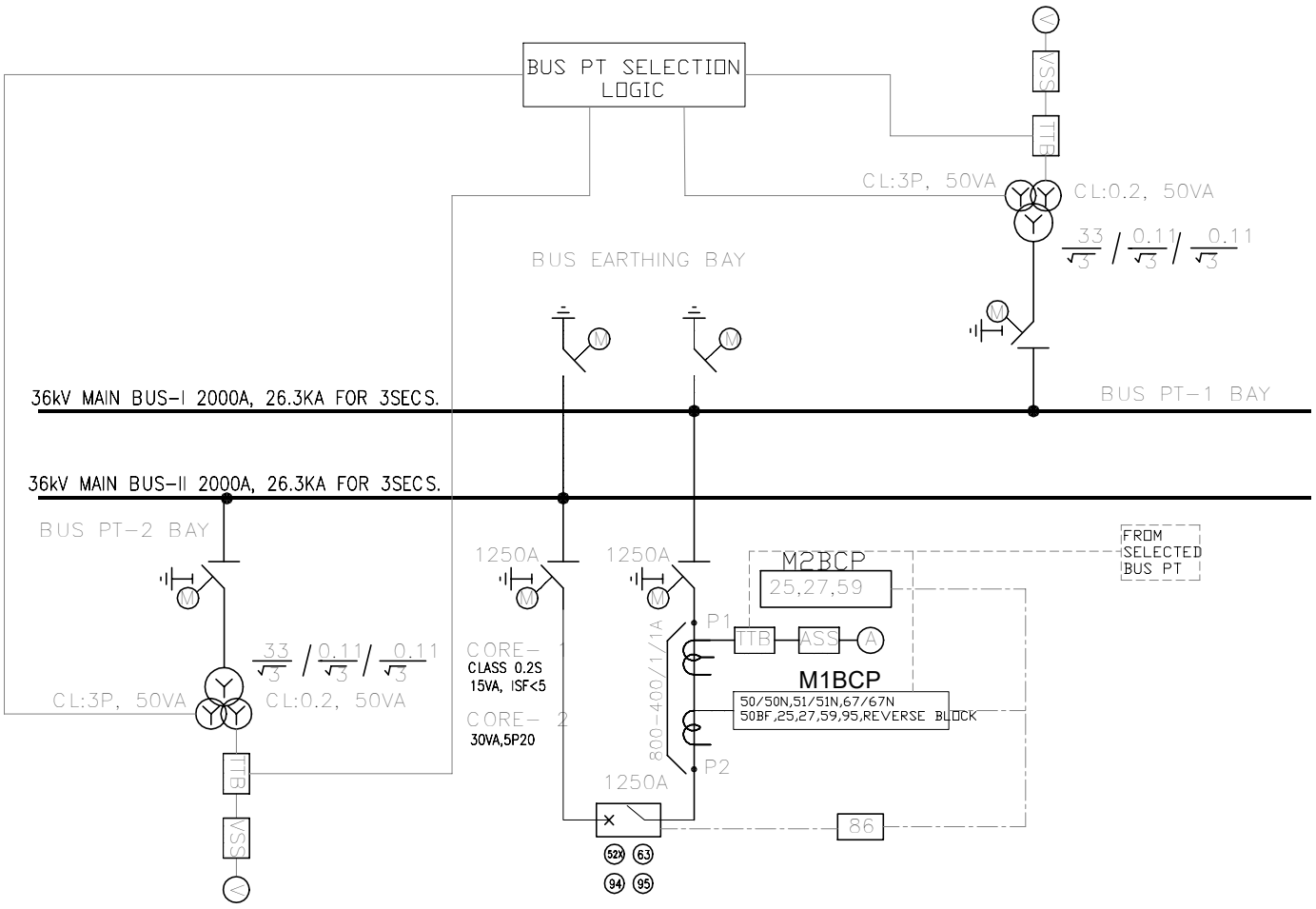

NOTE:
1. REFER SPECIFICATION FOR FUNCTIONAL DETAILS OF PROTECTION RELAYS.
2. TVM IS NOT IN SUPPLIER'S SCOPE.
3. BUS COUPLER OVER CURRENT AND EARTH FAULT RELAY AS PER CLAUSE 11.7 OF SPECIFICATION.
4. BURDENS ARE TENDER PURPOSE ONLY AND MAY CHANGE SUBJECT TO CALCULATIONS DURING DETAILED ENGINEERING.
5. SELECTED VT BASED ON BPT LOGIC FOR PROTECTION AND METERING.
6. THIS DRAWING IS TENTATIVE AND FOR TENDER PURPOSE ONLY.
7. REFER TENDER SPECIFICATION FOR FURTHER DETAILS.

LEGEND

SYMBOL	DESCRIPTION	SYMBOL	DESCRIPTION	SYMBOL	DESCRIPTION
	MOTORISED ISOLATOR WITH ONE E/S		TEST TERMINAL BLOCK		
	MOTORISED EARTH SWITCH				U/V & O/V PROTECTION
	SURGE DIVERTER				MASTER TRIP RELAY
	CURRENT TRANSFORMER		INS. O/C & E/F PROTECTION		TRIP CIRCUIT SUPERVISION RELAY
	POTENTIAL TRANSFORMER		DIRECTIONAL O/C & E/F PROTECTION		ANTI PUMPING RELAY
	CIRCUIT BREAKER		O/C & E/F PROTECTION		GAS PREASSURE RELAY
	VOLTMETER				BREAKER FAILURE PROTECTION
	AMMETER		SYNC CHECK		FUSE FAILURE PROTECTION
	TRIVECTOR METER		CIRCUIT BREAKER CONTACT MULTIPLICATION		

DRAWN	SK	TITLE:– TYPICAL 33KV BC SLD	BSES
CHECKED	BS		SPEC No. – BSES–TS–86–CRP–R1
APPD.	AS		
DATE	13.08.25		DWG No.:– SLD–CRP–33KV–01
SCALE	NTS		

ANNEXURE–E8

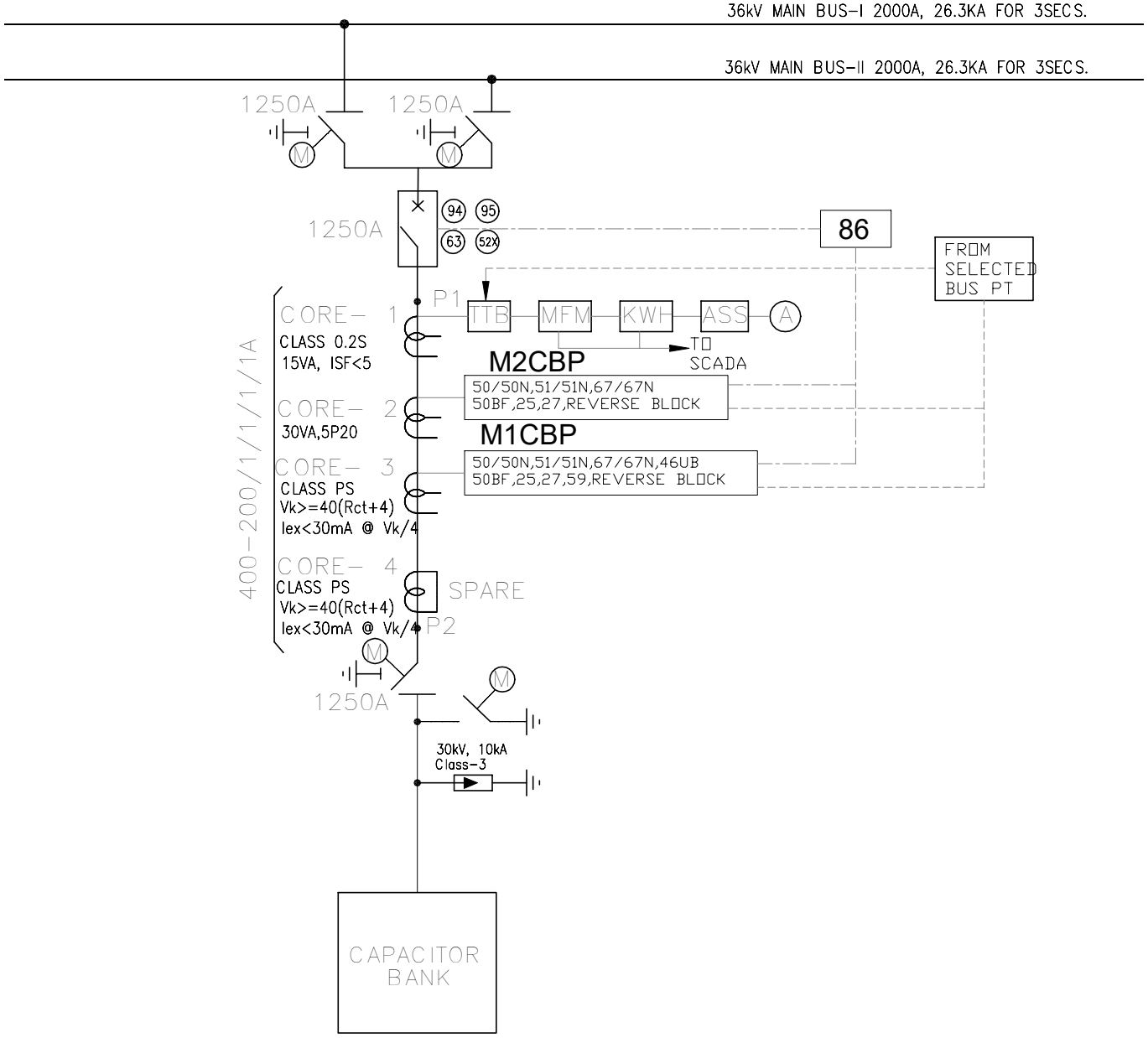

NOTE:
1. REFER SPECIFICATION FOR FUNCTIONAL DETAILS OF PROTECTION RELAYS.
2. TVM IS NOT IN SUPPLIER'S SCOPE.
3. CAPACITOR PROTECTION RELAY AS PER CLAUSE 11.8 OF SPECIFICATION
4. BURDENS ARE TENDER PURPOSE ONLY AND MAY CHANGE SUBJECT TO CALCULATIONS DURING DETAILED ENGINEERING.
5. SELECTED VT BASED ON BPT LOGIC FOR PROTECTION AND METERING.
6. THIS DRAWING IS TENTATIVE AND FOR TENDER PURPOSE ONLY.
7. REFER TENDER SPECIFICATION FOR FURTHER DETAILS.

LEGEND

SYMBOL	DESCRIPTION	SYMBOL	DESCRIPTION	SYMBOL	DESCRIPTION
	MOTORISED ISOLATOR WITH ONE E/S		TEST TERMINAL BLOCK		
	MOTORISED EARTH SWITCH		OUT OF BALANCE PROTECTION		U/V & O/V PROTECTION
	SURGE DIVERTER		FREQUENCY PROTECTION		MASTER TRIP RELAY
	CURRENT TRANSFORMER		INS. O/C & E/F PROTECTION		TRIP CIRCUIT SUPERVISION RELAY
	POTENTIAL TRANSFORMER		DIRECTIONAL O/C & E/F PROTECTION		ANTI PUMPING RELAY
	CIRCUIT BREAKER		O/C & E/F PROTECTION		GAS PREASSURE RELAY
	VOLTMETER		FUSE FAILURE PROTECTION		BREAKER FAILURE PROTECTION
	AMMETER		SYNC CHECK		
	TRIVECTOR METER		CIRCUIT BREAKER CONTACT MULTIPLICATION		

DRAWN	SK	TITLE:– TYPICAL 33KV CAP SLD	BSES
CHECKED	BS		
APPD.	AS		SPEC No – BSES–TS–86–CRP–R1
DATE	13.08.25		
SCALE	NTS		DWG No.:– SLD–CRP–33KV–01

BSES

Technical Specification

For

SMPS Based Battery Charger

Specification no – BSES-TS-73-SMPSBC-R0

Rev		0
Page		1 of 11
Date		05 May 2022
Prepared by	Abhishek Harsh	
	Amar Singh	
Reviewed by	Srinivas Gopu	
	Abhinav Srivastava	
Approved by	Gaurav Sharma	
	Gopal Nariya	

INDEX

1 SCOPE OF SUPPLY 3
2 CODES & STANDARDS 3
3 SERVICE CONDITIONS 3
4 CHARGER DESIGN FEATURES 4
5 METERING, ANNUNCIATION & INDICATION 5
6 APPROVED MAKE OF COMPONENTS 7
7 MIMIC DIAGRAM, LABEL & FINISH 7
8 QUALITY ASSURANCE, INSPECTION & TESTING 8
9 DEVIATIONS 8
10 GTP 8
11 DRAWING AND DATA SUBMISSION MATRIX 9
12 PACKING 10
13 SHIPPING 11
14 HANDLING AND STORAGE 11

1 SCOPE OF SUPPLY

This specification covers the design, manufacturing, testing, supply, erection & commissioning of 20 VDC/ 50 VDC SMPS based 2X100% Float Cum Boost Charger at site for indoor installation with all necessary accessories associated with it.
Specification covers Type 1 and Type 2 Battery Charger. Type 1 Battery Charger is for Grid Substations while Type 2 Battery Charger is for BSES HT Customers.

.

2 CODES & STANDARDS

Material, equipment and methods used in the manufacture of battery charger shall confirm to the latest edition of following

Indian Electricity Rules	
Indian electricity act	
CBIP manual	
IS 3895	Specification for rectifier equipment in general
IS 5921	Printed circuit boards
IS 6619	Safety code for semiconductor devices
IS 4540	Semiconductor rectifier assemblies and equipment
IS 694	PVC Insulated Cables for Working Voltage up to and including 1100V
IS 1248	Direct Acting Electrical indicating instruments
IS 2705	Current transformer
IS 3156	Voltage transformer
IS 3231	Electric relay for power system protection
IS 5578	Guide for making of insulated conductors
IS 8623	Low voltage switchgear and control gear assemblies
IS 13703	Low voltage fuses for voltages not exceeding 1000AC
IS 12063	Degree of enclosure protection
IS5	Color of mixed paints
IS 6297	Transformer & inductors for electronic equipment
IS 6553	Environment requirements for semiconductor device
IS 4007	Terminals for electronic equipment

3 SERVICE CONDITIONS

3.1	Max Ambient Temperature	50 deg C
3.2	Max Daily average ambient temp	40 deg C
3.3	Min Ambient Temp	0 deg C
3.4	Maximum Humidity	95%
3.5	Minimum Humidity	10%
3.6	Maximum annual rainfall	750 mm

3.7	Average no of rainy days per annum	60
3.8	Rainy months	June to Oct
3.9	Altitude above MSL	300 M
3.10	Seismic Zone	IV

4 CHARGER DESIGN FEATURES

4.1	Type	SMPS Based
4.2	Rating	For Type-1 Battery Charger a. 70 A for 50 V b. 35 A for 220 V For Type-2 Battery Charger a. 35 A for 50 V b. 20 A for 220 V
4.3	Configuration	2X100% Float cum Boost Charger.
4.4	Incoming Supply	Provision of Two Incoming Supply with Auto Changeover Facility
4.5	Automatic Phase Sequence Corrector	a. For 3 phase supply in right sequence, phase conversion. b. Protect equipment from phase reversal, phase loss.
4.6	Panel type	Metal enclosed frame construction
4.7	Overall Dimension	L - 1500 mm x D - 700 mm x H - 1900 mm
4.8	Cable Entry	Bottom
4.9	Location	Indoor, non air conditioned environment
4.10	Doors for front access	With anti theft hinge &handle
4.11	Cover for rear access	With Allen screw M6 size & handle
4.12	Construction	Sheet metal 2.0mm thick CRCA
4.13	Base frame	75mm ISMC
4.14	Lifting lugs	Four number
4.15	Gland plate	3mm metallic, un drilled & removable type
4.16	Enclosure protection	IP42 Minimum
4.17	Power terminal	Bus bar type, minimum 300mm above gland plate
4.18	Control terminal	Nylon66 with brass clamp
4.19	Bus bar	Tinned copper with insulation sleeve
4.20	Earth bus bar	Aluminum sized for rated fault duty for 1sec
4.21	Earth bus internal connection to all non current carrying metal parts	By copper flexible wire 2.5 sqmm
4.22	Earth bus external connection to owner earth	Al bus on both sides of panel with two holes for M10 bolt
4.23	Cooling	With Exhaust Fan
4.24	Panel heater	Thermostatically controlled through MCB
4.25	Panel internal wiring	Multi strand flexible color coded PVC insulated copper wire 1.5 sqmm 1100volt grade with 1.5 sqmm ferruling

		(other than circuit wiring related to PCB cards)
4.26	Isolation & protection device	Mounted at height minimum 1000mm from bottom
4.26.1	MCCB	For charger input, output & battery input
4.26.2	Battery & test resistor load	Lockable change over switch with one position for charger, second for 'OFF' & third position for external test resistor.
4.27	Hardware (Nut, bolts & handle)	Stainless steel
4.28	Essential provision	Surge suppression, harmonic suppression, blocking diodes, filters for ripple control
4.29	Insulating shrouds	On all live parts, power semi conductors & electronic components
4.30	Ripple content in DC output	0.5 % maximum
4.31	DC output voltage regulation	Maximum ±1% of rating with AC input supply variation of ±10% from 415 volts, frequency variation of ±5% from 50 HZ and simultaneous load variation of 0-100%
4.32	Reverse polarity connection	Protected against reversed battery polarity
4.33	Charger efficiency	90% minimum at Rated Load
4.34	Noise output	65DB maximum
4.35	Charger selector switch	For auto/manual and float/boost selection, lockable type inside panel
4.36	Charging current settings	25% to 100% of rating
4.37	Charging current accuracy	2% of set current with input voltage variation of ±10% and frequency variation of ±5%
4.38	Auto and Manual DC output adjustment range for float & boost charge (voltage & current)	By potentiometers inside panel, range suitable for battery bank. Charger suitable for other type of batteries if offered, shall be subject to buyer's approval.
4.39	Louvers	With stainless steel wire mesh
4.40	Gasket	Neoprene rubber
4.41	Panel illumination lamp with door switch	MCB controlled, with 5/15amp switch socket
4.42	Panel door keys	4 no. per panel, identical key for all panels
4.43	PCBs for electronic circuitry	With protective layer finish at back
4.44	PCB soldering	Preferably by wave soldering process
4.45	PCB/ electronic card mounting	With press fit type locking arrangement
4.46	Semiconductor component mounting	Shall not be on bakelite sheet

5 METERING, ANNUNCIATION & INDICATION

5.1	Ammeter (96x96mm)	Digital type, for AC input, DC output & battery current. Auxiliary supply for meters should be 48V to 230V AC/DC (Universal type)
5.2	Voltmeter (96x96mm)	Digital type, with selector switch for AC input, DC output & battery voltage. Auxiliary supply for meters should be 48V to 230V AC/DC (Universal type)

5.3	LED indication on panel front	
5.3.1	Status	
5.3.1.1	Input AC supply available on R,Y & B phase	Red/yellow/blue color LED
5.3.1.2	Float cum Boost charger AC MCCB 'ON'	Red color LED for each charger module
5.3.1.3	Charger output DC 'ON'	Red color LED for each charger module
5.3.1.4	Outgoing DCDB feeder ON	Red color LED for each other
5.3.2	Fault	
5.3.2.1	DC earth fault	Amber color LED
5.3.2.2	Battery MCCB OFF	Amber color LED
5.3.2.3	Charger output DC under/ over voltage	Amber color LED
5.3.2.4	AC mains undervoltage	Amber color LED
5.4	Annunciation	Hooter with isolating switch for fault annunciation.
5.5	Potential free contacts for remote indication to be wired upto terminal block	a. AC under voltage b. AC over voltage c. CH-A AC MCCB trip/OFF d. CH-B AC MCCB trip/OFF e. CH-A Rect/Cond. fuse fail f. CH-B Rect/Cond. fuse fail g. CH-A DC MCCB trip/OFF h. CH-B DC MCCB trip/OFF i. Battery MCCB trip/OFF j. CH-A DC under voltage k. CH-B DC under voltage l. CH-A DC over voltage m. CH-B DC over voltage n. Battery DC under voltage o. Battery DC over voltage p. DC Bus over voltage q. DC Earth fault r. Battery Charger in boost mode
5.6	Microprocessor based monitoring unit cum controller	Charger should have a microprocessor based controller
5.6.1	Analog signals to be monitored by controller	a. AC Input Voltage and current b. DC output voltage and current for Charger -1 and Charger -2 c. Battery voltage and current
5.6.2	Alarms/Faults signals to be monitored by controller	a. AC under voltage b. AC over voltage c. CH-A AC MCCB trip/OFF d. CH-B AC MCCB trip/OFF e. CH-A Rect/Cond. fuse fail f. CH-B Rect/Cond. fuse fail g. CH-A DC MCCB trip/OFF h. CH-B DC MCCB trip/OFF i. Battery MCCB trip/OFF

		j. CH-A DC under voltage k. CH-B DC under voltage l. CH-A DC over voltage m. CH-B DC over voltage n. Battery DC under voltage o. Battery DC over voltage p. DC Bus over voltage q. DC Earth fault r. Battery Charger in boost mode
5.6.3	SCADA Interfacing	Microprocessor controller should have RS485 port capable of transmitting all analog and alarm/fault signal to RTU on open MODBUS protocol. Any hardware/software required to achieve the said compatibility shall be in bidder's scope.
5.6.4	Display	Backlit display capable of displaying all the analog and fault/alarm signals mentioned above.

6 APPROVED MAKE OF COMPONENTS

6.1	Switch	Siemens / L&T (Salzer)
6.2	HRC Fuse Links	GE/ Siemens/ L&T
6.3	Diodes & SCR	Hirect/USHA/IOR
6.4	Meters	AE/Rishabh
6.5	AC Contractors &O/L Relay	L&T/Siemens/Telemechanique/GE/ABB
6.6	Terminals	Connectwell/Elmex/Wago/Phoenix
6.7	Push buttons / Actuator	L&T/Siemens/Vaishno
6.8	MCCB	L&T/Siemens/ ABB/GE
6.9	MCB	Datar/Legrand/Hager/Schneider
6.10	Indicating lamps LED type	Vaishno/Binay/Teknic/Siemens/Mimic

7 MIMIC DIAGRAM, LABEL & FINISH

7.1	Mimic diagram	To be provided
7.2	Name plate on panel front	
7.2.1	Material	Anodized aluminum 16SWG
7.2.2	Background	SATIN SILVER
7.2.3	Letter, diagram & boder	Black
7.2.4	Process	Etching
7.2.5	Name plate details	a. Manufacturer name b. Month & year of manufacture c. Equipment type d. Input & Output rating e. Owner name & order number f. Guarantee period g. Weight of panel h. Degree of protection i. Sr. No.
7.3	Labels for meters, indication &	Anodized aluminum with white character on black

	all cards / sub assemblies in panel	background
7.4	Danger plate on front & rear side	Anodized aluminum with white letters on red background
7.5	Painting surface preparation	Shot blasting or chemical 7 tank process
7.6	Painting external finish	Powder coated polyester base grade A, shade –RAL 7032, uniform
7.7	Painting internal finish	Powder coated polyester base grade A, shade – white, uniform thickness 50 micron minimum
7.8	Labels for all components in panel	Anodized aluminum with white character on black background, fixed by rivets only
7.9	SLD	SLD of charges shall be provided at backside of the main door of Charger on Aluminium plate

8 QUALITY ASSURANCE, INSPECTION & TESTING

8.1	Vendor quality plan	To be submitted for purchaser approval
8.2	Inspection points	To be mutually identified & agreed in quality plan
8.3	Type test	Equipment should be of type tested quality only, type test certificate to be submitted along with offer. If the manufacturer's lab is accredited by govt. / authorized body then it shall be acceptable for type testing.
8.4	Routine test	As per relevant Indian standard
8.5	Acceptance test	To be performed in presence of Owner at manufacturer works a. Physical inspection & BOM, wiring check b. Insulation resistance test c. HV test for one minute d. Voltage regulation test e. Heat run test for 12 hours f. Measurement of efficiency, power factor & ripple content

9 DEVIATIONS

Deviation from this specification shall be stated in writing with the tender by reference to the specification clause/ GTP/ Drawing and description of alternative offer. In absence of such a statement, it shall be assumed by the buyer that the seller complies fully with this specification.

10 GTP

Vendor must submit clause wise compliance against specification at the time of drawing approval clearly highlighting the deviations from specification against each clause.

11 DRAWING AND DATA SUBMISSION MATRIX

S. No	Head	Bid	Drawing Approval	Pre Dispatch	Pre Closure
11.1	Contact Person Name, Email ID and Mobile Number	Required	Required		
11.2	Deviation Sheet (as per "Deviations" Clause)	Required			
11.3	GTP		Required		
11.4	Relevant Type Test as per IS/IEC/UL	Required	Required		
11.5	Manufacturer's quality assurance plan and certification for quality standards		Required		
11.6	Sizing Calculation of Associated Equipment		Required		
11.7	Recommended Spares for five years of operation)		Required		
11.8	**Battery Charger Drawing**				
11.8.1	General Arrangement	Required	Required		
11.8.2	Sectional Layout		Required		
11.8.3	Cabinet Layout		Required		
11.8.4	SLD	Required	Required		
11.8.5	Schematic Circuit diagram and Scheme of Each type of Panel		Required		
11.8.6	Communication Architecture		Required		
11.8.7	QAP		Required		
11.8.8	BOQ		Required		
11.8.9	Plan		Required		
11.8.10	Foundation Diagram		Required		
11.8.11	Make of all Component as per specification		Required		
11.8.12	Drawing of Substation Room		Required		
11.9	Installation, erection and commissioning manual		Required		

S. No	Head	Bid	Drawing Approval	Pre Dispatch	Pre Closure
11.10	Inspection Reports			Required	
11.11	As manufacturing Drawings			Required	
11.12	Operation and Maintenance Manual			Required	
11.13	Trouble shooting manual			Required	
11.14	As built Drawings				Required

12 PACKING

12.1	Packing Protection	Against corrosion, dampness, heavy rains, breakage and vibration. During transportation/ transit and storage, module may be subjected to outdoor conditions. Hence, packing of each panel shall be weatherproof.
12.2	Packing for accessories and spares	Robust wooden non returnable packing case with all the above protection & identification Label
12.3	Packing Identification Label to be provided on each packing case with the following details	
12.3.1	Individual serial number	
12.3.2	Purchaser's name	
12.3.3	PO number (along with SAP item code, if any) & date	
12.3.4	Equipment Tag no. (if any)	
12.3.5	Destination	
12.3.6	Project Details	
12.3.7	Manufacturer / Supplier's name	
12.3.8	Address of Manufacturer / Supplier / it's agent	
12.3.9	Description and Quantity	
12.3.10	Country of origin	
12.3.11	Month & year of Manufacturing	
12.3.12	Case measurements	
12.3.13	Gross and net weights in kilograms	
12.3.14	All necessary slinging and stacking instructions	
12.4	Packing Protection	Against corrosion, dampness, heavy rains, breakage and vibration. During transportation/ transit and storage, module may be subjected to outdoor conditions. Hence, packing of each panel shall be weatherproof.
12.5	Packing for accessories and spares	Robust wooden non returnable packing case with all the above protection & identification Label
12.6	Packing Identification Label to be provided on each packing case with the following details	

12.6.1	Individual serial number
12.6.2	Purchaser's name
12.6.3	PO number (along with SAP item code, if any) & date
12.6.4	Equipment Tag no. (if any)
12.6.5	Destination
12.6.6	Project Details
12.6.7	Manufacturer / Supplier's name
12.6.8	Address of Manufacturer / Supplier / it's agent
12.6.9	Description and Quantity
12.6.10	Country of origin
12.6.11	Month & year of Manufacturing
12.6.12	Case measurements
12.6.13	Gross and net weights in kilograms
12.6.14	All necessary slinging and stacking instructions

13 SHIPPING

13.1	Shipping	The bidder shall ascertain at an early date and definitely before the commencement of manufacture, any transport limitations such as weights, dimensions, road culverts, Overhead lines, free access etc. from the Manufacturing plant to the project site. Bidder shall furnish the confirmation that the proposed Packages can be safely transported, as normal or oversize packages, up to the site. Any modifications required in the infrastructure and cost thereof in this connection shall be brought to the notice of the Purchaser.
		The seller shall be responsible for all transit damage due to improper packing.

14 HANDLING AND STORAGE

14.1	Handling and Storage	Manufacturer instruction shall be followed. Detail handling & storage instruction sheet / manual needs to be furnished before commencement of supply.

BSES

Technical Specification

Of

Direct Current Distribution Board

Specification no – BSES-TS-71-DCDB-R0

Rev:		0
Pages:		1 of 16
Date:		02 May 2022
Prepared by	Abhishek Harsh	
	Amar Singh	
Reviewed by	Srinivas Gopu	
	Abhinav Srivastava	
Approved by	Gaurav Sharma	
	Gopal Nariya	

INDEX

1 SCOPE 3
2 STANDARDS AND CODES 3
3 SERVICE CONDITION 3
4 CONSTRUCTION 4
5 CONFIGURATION 5
6 BUSBARS 6
7 TERMINALS AND WIRING 6
8 METERS, INDICATIONS, PUSH BUTTONS & HEATERS 7
9 NAME PLATES & MARKINGS 7
10 FINISH 8
11 APPROVED MAKES OF COMPONENTS 8
12 INSPECTION AND TESTING 9
13 PACKING, SHIPPING, HANDLING AND SITE SUPPORT 9
14 DEVIATIONS 10
15 DOCUMENT SUBMISSION 10
16 GUARANTEED TECHNICAL PARTICULARS 11

1 SCOPE

This specification covers the design, engineering, manufacture, assembly and testing at Manufacturer's works and supply of 220 VDC/50 VDC Distribution board (DCDB) along with all hardware and accessories required for installation and operation.
Specification covers Type 1 and Type 2 DCDB. Type 1 DCDB is for Grid Substations while Type 2 DCDB is for BSES HT Customers.

2 STANDARDS AND CODES

2.1	IS:8623	Specification for factory built assemblies of switchgear & control gear for voltages up to and including 1000V AC/1200 V DC.
2.2	IS 60947-1	Specification for Low-voltage Switchgear and Controlgear - Part 2 :Circuit Breakers
2.3	IS:10118	Code of practice for selection, installation and maintenance switchgear and control gear
2.4	IS:2705	Current transformers
2.5	IS:3231	Electrical relays for power system protection
2.6	IS:1248	Electrical Indicating instruments
2.7	IS:4794	Switches and push buttons
2.8	IS:6005	Code of practice of phosphating iron and steel
2.9	IS:5082	Wrought Aluminium and aluminum alloys for electrical purposes
2.10	IS 3043	Code of practice for Earthing

3 SERVICE CONDITION

3.1	Location	Indoor
3.2	Average grade atmosphere	Heavily polluted, Dry
3.3	Maximum altitude above sea level	1000M
3.4	Ambient air temperature	Highest 50Deg C Average 40Deg C
3.5	Minimum ambient air temperature	0 Deg C
3.6	Relative Humidity	100%

3.7	Rainfall	750mm concentrated in four months
3.8	Seismic Zone	IV

4 CONSTRUCTION

4.1	General construction	It shall be free-standing type comprising dust-tight and vermin-proof sheet steel cabinets suitable for indoor installation with IP-54 degree of protection. Necessary busbar support insulators, cable glands, cable supports and terminal blocks etc. The board shall preferably be of single front type.
4.2	Material	The Board shall be made cold rolled steel sheet having Thickness of 2.5 mm of load bearing member and 2 mm for Doors and covers , suitably reinforced to provide flat level surfaces. No welds, rivets, hinges or bolts shall be visible from outside.
4.3	Equipment Mounting	All switches provided on the distribution board shall be on front side of the cabinets, operable from outside. All instruments and control devices shall be mounted on the front of cabinets and fully wired to the terminal blocks.
4.4	Busbar housing	The busbars shall be housed in totally enclosed busbar chambers. Incoming connections from the busbar to various feeders shall be designed so as not to disturb cable connections. Busbar arrangement should ensure safety of the operation/maintenance personnel and facilitate working on any outgoing module without the need for switching off in-feed to the adjacent modules, as far as possible
4.5	Cable alleys	A cable alley preferably 230 mm wide shall be provided in each vertical section for taking cables into the compartments. Cable alleys shall be provided on sides of busbar chamber.
4.6	Cable entry	Cable entry should be from bottom
4.7	Cable glands	Compression type cable glands shall be provided to hold the cables to avoid any pressure or tension on the terminal block connections.
4.8	Gland Plate	Gland plate shall be 3.0mm thick.
4.9	Doors	The doors of cabinets shall be lockable and shall be fitted with double lipped gaskets.
4.10	Gasket	All doors, removable covers and panels shall be gasketed all around with neoprene gaskets. Gaskets shall be embedded through machine only.
4.11	Ventilating louvers	Ventilating louvers shall have screens and filters. The screens shall be made of either brass or GI wires mesh.

4.12	Foundation	The panels shall be fixed on the embedded foundation channels with intervening layers anti vibration strips made of shock absorbing materials.
4.13	Base Frame	Base frames shall be supplied along with panels. 100mm channel painted black.
4.14	Mounting	Equipment on front of panel shall be flush mounted. No equipment shall be mounted on the doors.
4.15	Working level	The center lines of switches, push buttons and indicating lamps shall not be less than 750mm and higher than 1600mm from panel base.
4.16	Dimension	500(L)X500(D)X1800(H) mm^3

5 CONFIGURATION

5.1	Incomers	One incomers having Double Pole DC MCB with Aux Switch.
5.2	Outgoing feeders	All outgoing feeders shall have MCB. Number of outgoing feeders shall be as per table attached

Application	No of Poles	Type-1		Type-2	
		Rating of MCB (In Amp)	Quantity	Rating of MCB (In Amp)	Quantity
Incomer	2	100	1	50	1
Emergency Lighting DB	2	32	1	16	1
Fire Alarm System	2	32	1	16	0
SCADA	2	32	2	16	1
CRP/33 kV/66 kV Switchgear	2	32	4	16	1
11 kV Switchgear	2	32	4	16	0
Testing Purpose	2	32	1	16	1
NIFPS	2	32	4	16	0
Spare 1	2	100	1	50	1
Spare 2	2	32	4	16	2

6 BUSBARS

6.1	Material	Busbar shall be of tinned electrolytic copper or Aluminium
6.2	Size	Suitable for carrying the rated continuous current of 100 A and short circuit current of 15 kA. Busbars shall be continuous throughout the panel. Temperature rise should be limited to 40 degrees over ambient.
6.3	Supports	The busbar shall be supported by means of durable non-hygroscopic, non-combustible and non-tracking polyester fiberglass material or porcelain. Supports shall be capable of withstanding the maximum short circuit stresses.
6.4	Sleeves and shrouds	Busbars shall be encased in heat-shrinkable sleeves of insulating material which shall be suitable for the operating temperature of busbars during normal service. The busbar joints shall be provided with removable thermosetting plastic shrouds.

7 TERMINALS AND WIRING

7.1	Wiring	
7.1.1	Grade and type	1100 V grade, PVC insulated, FRLS type stranded flexible copper wire.
7.1.2	Ferruling	Each wire shall bear an identifying ferrule or tag at each end or connecting point.
7.1.3	Spare	20% Spare Wiring
7.2	Terminals	Terminals of appropriate size shall be provided inside each cabinet for incoming and outgoing cables.
7.2.1	Grade	1100 V grade, moulded piece terminals complete with insulated barriers, washers, nuts and lock nuts.
7.2.2	Power Terminals type	Stud type, nut driver operated
7.2.3	Control terminals type	Stud type, screw driver operated
7.2.4	Spare terminals	20% spare terminals should be provided in each terminal block.
7.2.5	Accessibility	Placement of terminals shall enable proper cable termination. Terminals shall be readily accessible for inspection and maintenance.
7.2.6	Marking	The terminals shall be serially numbered to facilitate installation and maintenance.

8 METERS, INDICATIONS, PUSH BUTTONS & HEATERS

8.1	Meters	
8.1.1	Ammeter	DC Moving coil ammeter of size 96 sq.mm. with external shunt. Rating of Ammeter shall be 0-100A DC.
8.1.2	Voltmeter	DC Moving coil voltmeter of size 96.sq.mm to read the DC Bus voltage. Rating of Voltmeter shall be 0-300VDC
8.1.3	Type	Digital type, connected through instruments transformers of suitable rating.
8.2	Indicating lamps	Indicating lamps shall be of low wattage cluster LED type.
8.2.1	Incomer/ Outgoing On	Red
8.2.2	Incomer/ Outgoing Off	Green
8.2.3	Incomer/ Outgoing Trip	Amber
8.3	Push buttons	For manual operation of incomer MCB
8.4	Heaters	Cubicle space heater having rating of 100W. Thermostat for space heater shall be provided with temperature range $0\text{-}90^0$
8.5	CFL	Cubicle lamp shall be provided in DCDB having rating of 11 W.

9 NAME PLATES & MARKINGS

9.1	Panel nameplate	Panel shall have a nameplate clearly indicating the following: a. Panel Serial No.- b. Customer Name - BSES Yamuna/Rajdhani Power Ltd c. PO No. & date - d. Type of Panel - e. Current rating - f. Guarantee period -
9.2	Feeder nameplate	Large and bold name plate carrying the feeder identification shall be provided on the top.
9.3	Equipment nameplate	a. All equipment mounted on front side as well as equipment mounted inside the panels shall be provided with individual name plates with equipment designation engraved. b. All front mounted equipment shall be also provided

		at the rear with individual name plates engraved with tag numbers corresponding to the one shown in the panel internal wiring to facilitate easy tracing of the wiring.
9.4	Material	Non-rusting metal or 3 ply lamicoid. Nameplates shall be black with white engraving lettering. Stickers are not allowed.
9.5	Fixing	All nameplates/rating plates shall be riveted to the panels at all four corners. Bolting/screwing is not acceptable.
9.6	Markings	Each switch shall bear clear inscription identifying its function. Similar inscription shall also be provided on each device whose function is not other wise identified. If any switch or device does not bear this inscription separate nameplate giving its function shall be provided for it. Switch shall also have clear inscription for each position indicating e.g. Trip-Neutral close, ON-OFF etc.

10 FINISH

10.1	Primer	Two coats
10.2	Paint	Two finishing coats of epoxy based paint of Shade RAL 7032 with glossy finish.
10.3	Paint thickness	50 microns (minimum)

11 APPROVED MAKES OF COMPONENTS

11.1	Switch	Siemens / L&T (Salzer)
11.2	HRC Fuse Links	GE/ Siemens/ L&T
11.3	Meters	Rishabh/Schneider/AE
11.4	Terminals	Connectwell/Elmex/Wago/Phoenix
11.5	Push buttons / Actuator	L&T/Siemens/Vaishno/Schneider
11.6	MCB	Datar/Legrand/Hager/Schneider/ABB
11.7	Indicating lamps	Vaishno/Binay/Teknic/Siemens/Mimic/C&S

12 INSPECTION AND TESTING

12.1	Type test	Equipment should be of type tested quality only, type test certificate to be submitted along with offer. If the manufacturer's lab is accredited by govt. / authorized body then it shall be acceptable for type testing.
12.2	Acceptance & Routine tests	As per relevant Indian standard

13 PACKING, SHIPPING, HANDLING AND SITE SUPPORT

13.1	Packing Protection	The packing shall be fit to withstand rough handling during transit and storage at destination. The test set should be properly protected against corrosion, dampness & damage.
13.2	Packing for accessories and spares	Robust non-returnable packing case with all the above protection & identification Label. The bidder should get the packing list approved before dispatching the material.
13.3	Packing Identification Label	On each packing case, following details are required:
13.3.1	Individual serial number	
13.3.2	Purchaser's name	
13.3.3	PO number (along with SAP item code, if any) & date	
13.3.4	Equipment Tag no. (if any)	
13.3.5	Destination	
13.3.6	Manufacturer / Supplier's name	
13.3.7	Address of Manufacturer / Supplier / it's agent	
13.3.8	Description	
13.3.9	Country of origin	
13.3.10	Month & year of Manufacturing	
13.3.11	Case measurements	

13.3.12	Gross and net weight	
13.3.13	All necessary slinging and stacking instructions	
13.4	Shipping	The seller shall be responsible for all transit damage due to improper packing.
13.5	Handling and Storage	Manufacturer instruction shall be followed.
13.6	Detail handling & storage instruction sheet / manual to be furnished before commencement of supply.	

14 DEVIATIONS

14.1	Deviation	Deviations from this Specification shall be stated in writing with the tender by reference to the Specification clause/GTP/Drawing and a description of the alternative offer. In absence of such a statement, it will be assumed that the bidder complies fully with this specification. No deviation will be acceptable post order.

15 DOCUMENT SUBMISSION

Drawing submission shall be as per the matrix given below. All documents/ drawing shall be provided on A3/A4 sheet in box file with separators for each section. Also provide USB containing pdf with bid for soft copy. Language of the documents shall be English only. Deficient/ improper document/ drawing submission may liable for rejection

S. No	Head	Bid	Drawing Approval	Pre Dispatch	Pre Closure
15.1	Contact Person Name, Email ID and Mobile Number	Required			
15.2	Deviation Sheet	Required	Required		
15.3	Type Test	Required			
15.4	Any Technological Advancement in DCDB	Required			
15.5	Manufacturer's quality assurance plan and certification for quality standards				
15.6	General Arrangement		Required		
15.7	Door Layout		Required		

15.8	Internal Layout		Required		
15.9	SLD		Required		
15.10	Schematic Circuit diagram		Required		
15.11	Bus Bar Arrangement		Required		
15.12	Cable Alley Arrangement		Required		
15.13	GTP	Required	Required		
15.14	QAP		Required		
15.15	BOQ		Required		
15.16	Foundation diagram		Required		
15.17	TB Detail		Required		
15.18	Name Plate Detail		Required		
15.19	Make of all Component as per specification		Required		
15.20	Inspection Report			Required	
15.21	As manufacturing Drawings			Required	
15.22	Operation and Maintenance Manual			Required	Required
15.23	Trouble shooting manual			Required	Required
15.24	As built Drawings				Required
15.25	Test Report				Required

16 GUARANTEED TECHNICAL PARTICULARS

Vendor must submit clause wise compliance in Excel sheet against specification at the time of drawing approval clearly highlighting the deviations from specification against each clause.

S. No.	Description	Specification requirement	Bidder's Data
16.1	**GENERAL FEATURES**		
16.1.1	Make		
16.1.2	Type		
16.1.3	Reference Standard		

16.1.4	Rated Operational voltage	220 VDC/50 VDC	
16.1.5	Rated Nominal Current	100	
16.1.6	Rated Insulation voltage	1100V	
16.1.7	Rated Impulse withstand voltage	8kV	
16.1.8	Service supply for heating, lighting and power sockets	240VAC±10%	
16.1.9	Mounting	Floor (Free standing)	
16.1.10	Connections	Cable entry – Bottom	
16.1.11	Configuration	Single front	
16.1.12	Enclosure thickness		
a	Load Bearing Member	>=2.5mm	
b	Doors and Covers	>=2 mm	
c	Gland Plate	3 mm	
16.1.13	Enclosure Material	CRCA Sheet	
16.1.14	Enclosure degree of protection	IP 54	
16.1.15	Power Cable Termination	Suitable for 4CX50 Sq.mm Al	
16.1.16	Paint shade	RAL 7032 (Siemens Grey)	
16.1.17	Typical vertical section (Overall dimension (mm) and weight (Kg))	Required	
16.1.18	Incomer		
16.1.19	Outgoings		
16.1.20	Dimensions of the DCDB Panel	500(L)X500(D)X1800(H) mm3	
16.1.21	Weights of the DCDB Panel	(in kg.)	
16.1.22	Marking on the panel	As per the specification	
16.1.23	Cable Alley Width	230 mm	
16.1.24	Cable Gland	Compression Type	

16.1.25	Gasket Material	Neoprene	
16.1.26	Ventilating louvers	Required	
16.1.27	Base Frame	100mm channel	
16.2	**MCB**		
16.2.1	Make	**Datar/Legrand/Hager/Schneider/ABB**	
16.2.2	Incomer	100A/50 A	
16.2.3	Emergency Lighting DB	32A/16 A	
16.2.4	Fire Alarm System	32A/16 A	
16.2.5	SCADA	32A/16 A	
16.2.6	CRP	32A/16 A	
16.2.7	11 kV Switchgear	32A/16 A	
16.2.8	Testing Purpose	32A/16 A	
16.2.9	NIFPS	32A/16 A	
16.2.10	Spare 1	100A/50 A	
16.2.11	Spare 2	32A/16 A	
16.3	**BUS AND BUS TAPS**		
16.3.1	Make		
16.3.2	Material	Tinned electrolytic copper or Aluminum	
16.3.3	Reference standard		
16.3.4	Continuous Current (at site condition, 50°C ambient) within cubicle		
16.3.5	Short Circuit withstand Current for 1 sec	15 KA	
16.3.6	Cross sectional Area		
16.3.7	DC resistance	ohm/m/ph	

16.3.8	Reactance	ohm/m/ph	
16.3.9	Losses-middle phase	w/m/ph	
16.3.10	Minimum clearance of bus bar and joints	Required	
16.3.11	Phase to phase (mm)		
16.3.12	Phase to earth (mm)		
16.3.13	Bus bar insulation	i. Heat shrinkable sleeves rated for maximum operating voltage	
		ii. Cast resin shrouds for joint	
16.3.14	Bus joints	Silver	
16.3.15	Bus bar support insulator	Required	
16.3.16	Spacing (mm)		
16.3.17	Make		
16.3.18	Type		
16.3.19	Reference standard		
16.3.20	Voltage class (kV)		
16.3.21	Minimum creepage distance (mm)		
16.3.22	Cantilever strength (Kg/sq.cm.)		
16.4	**Wiring and Terminals**		
16.4.1	**Wiring**		
a	Grade and type	1100 V grade, PVC insulated, FRLS type stranded flexible copper wire.	
b	Ferruling	Each wire shall bear an identifying ferrule or tag at each end or connecting point.	
c	Spare	20% Spare Wiring	
16.4.2	**Terminals**		
a	Grade	1100 V grade, moulded piece terminals complete with insulated barriers, washers, nuts and lock nuts.	
b	Power Terminals type	Stud type, nut driver operated	
c	Control terminals type	Stud type, screw driver operated	

d	Spare terminals	20% spare	
e	Accessibility	Placement of terminals shall enable proper cable termination. Terminals shall be readily accessible for inspection and maintenance.	
f	Marking	The terminals shall be serially numbered to facilitate installation and maintenance.	
16.5	**METERS, INDICATIONS, PUSH BUTTONS & HEATERS**		
16.5.1	Ammeter	DC Moving coil ammeter of size 96 sq.mm. with external shunt. Rating of Ammeter shall be 0-100A DC.	
a	Model No Ammeter		
b	Make of Ammeter		
16.5.2	Voltmeter	DC Moving coil voltmeter of size 96.sq.mm to read the DC Bus voltage. Rating of Voltmeter shall be 0-300VDC	
a	Model No Voltmeter		
b	Make of Voltmeter	Rishabh/Schneider/AE	
c	Type	Digital type	
16.5.3	Indicating lamps	Cluster LED type.	
a	Make of Indicating lamps	Vaishno/Binay/Teknic/Siemens/Mimic/C &S	
b	Incomer/ Outgoing On	Red	
c	Incomer/ Outgoing Off	Green	
d	Incomer/ Outgoing Trip	Amber	
e	Push buttons Make	L&T/Siemens/Vaishno/Schneider	
16.5.4	Heaters	Cubicle space heater having rating of 100W. Thermostat for space heater shall be provided with temperature range $0\text{-}90^0$	
16.5.5	CFL	Cubicle lamp shall be provided in DCDB having rating of 11 W.	

16.6	**NAME PLATES & MARKINGS**		
a	Panel nameplate	Panel Serial No.-	
b		Customer Name - BSES Yamuna/Rajdhani Power Ltd	
c		PO No. & date -	
d		Type of Panel -	
e		Current rating -	
f		Guarantee period -	
16.6.1	Feeder nameplate	As per Spec	
a	Equipment nameplate	As per Spec	
b	Material	As per Spec	
c	Fixing	As per Spec	
d	Markings	As per Spec	
16.7	**FINISH**		
a	Primer	Two coats	
b	Paint	Two finishing coats of epoxy based paint of Shade RAL 7032 with glossy finish.	
c	Paint thickness	50 microns (minimum)	

BSES

Technical Specification

Of

Nickel Cadmium Battery Bank

Specification no – BSES-TS-312-NICD-R0

Rev:		0
Date:		18 Nov 2025
Prepared by	Amar Deep Singh	
Reviewed by	Uttam Shukla	
Approved by	Deepti Sharma	

Index

1.0 Scope of supply 3
2.0 Codes & standards 3
3.0 DC distribution system data 3
4.0 Battery bank design features 4
5.0 Quality assurance 5
6.0 Inspection & testing 5
7.0 Shipping, Handling and Site support 6
8.0 Deviations 6
9.0 Drawing submission 7
Annexure A Scope of supply 8
Annexure B Technical particulars (Data by purchaser) 9
Annexure C Guaranteed Technical Particulars (Data by Supplier) 10
Annexure D Recommended spares (Data by supplier) 12
Annexure E Typical DC load curve 13

1.0 Scope of supply

1.1) A DC battery set shall connected to a float cum boost charger.
1.2) Each battery bank shall be sized for supplying 100% load for a backup time of 2 hour

2.0 Codes & standards

Materials, equipment and methods used in the manufacture of switchboards shall conform to the latest edition of following -

Indian Electricity Rules	
Indian electricity act	
CBIP manual	
IEC60623	Ni Cd battery
IS10918	Ni Cd battery
IS5	Color of mixed paints
IS13703	Low-voltageFusesforVoltagesNotExceeding1000VAC
IS5578	Guide for Marking of Insulated Conductors

In the event of direct conflict between various order documents, the precedence of authority of documents shall be as follows -

i. Guaranteed Technical Particulars (GTP)
ii. Specification including applicable codes, standards
iii. Approved Vendor Drawings
iv. Other documents

3.0 DC distribution system data

3.1	DC Supply	2 wire,with positive & negative polarity
3.2	Earth reference	Unearthed system
3.3	Voltage	220V / 50V
3.4	Application–Industrial	Standby DC backup for switchgear control Supply & SCADA RTU

4.0 Battery bank design features

4.1	DC battery bank Ahr rating & sizing	As per Annexure B
4.2	DC load curve	As per Annexure E
4.3	Location of battery bank	Indoor
4.4	Mounting of battery bank	On steel rack, painted with anticorrosive paint
4.5	Arrangement	Battery cells connected in series with multi step single tier formation.
4.6.1	Battery Type	Storage type rechargeable wet cell
4.6.2	DC battery electrode type	Fiber plate/pocket plate
4.7	Battery cell	Vented cell closed type
4.8	Venting device	Anti-splash
4.9	Battery cell container	Translucent, prismatic, nonflammable, poly propylene
4.10	Battery cell lifting arrangement	Suitable arrangement on cell
4.11	Electrolyte sampling & servicing	Alkali resistant material cap on cell top
4.12	Battery cell designation	To be marked on cell as per relevant standard
4.13	Battery cell marking	Manufacturer name & type, month & year of manufacture, nominal voltage, rated Ahr capacity & Cell Number
4.14	Battery electrolyte level-minimum& maximum	To be marked on cell container
4.15	Battery cell electrolyte	KOH solution in distilled water
4.16	Electrolyte specific gravity	To be specified by supplier at 27 degC
4.17	Nominal cell voltage	1.2 volt for Ni cd
4.18	Battery terminals	Stud type
4.19	Terminal polarity marking	Positive & negative marked on cell
4.20	Battery cell shorting metal links	Nickel plated copper with protective Insulating sleeve
4.21	Insulating shrouds	For all battery cell terminals & shorting links

4.22	Insulating pads for battery rack	At the bottom of rack supports, made from High impact material
4.23	Battery suitable for Ripple content	5% minimum in DC charger output
4.24	Power terminal with insulator	Bus bar type mounted on rack suitable for 70 sqmm cable
4.25	Cooling	Natural ventilation
4.26.1	Tools & accessories to be supplied With each battery set	Set of insulated spanners
4.26.2		Set of thermometers
4.26.3		Rubber hand gloves / eye protection goggle & specific gravity test kit
4.26.4		Portable DC voltmeter
4.26.5		Funnel with filter
4.26.6		Mug for filling electrolyte
4.26.7		Wall mounted box to keep all accessories

5.0 Quality assurance

5..1	Vendor quality plan	To be submitted for purchaser approval
5.2	Inspection points	To be mutually identified & agreed in quality plan

6.0 Inspection & testing

6.1	Type test	Equipment shall be of type tested quality as per IEC for fiber plate battery & as per IS for Pocket plate battery
		If the manufacturers lab is accredited by govt./authorized body the nit shall be acceptable for type testing
6.2	Routine test	As per relevant standard
6.3	Acceptance test	To be performed in presence of purchaser At manufacturer works
		-Physical in section & BOM, wiring check
		-Insulation resistance test

		-HV test for one minute
		-Charge discharge test
		-Measurement of efficiency & temperature rise for above

7.0 Shipping, Handling and Site support

7.1	Packing Protection	Against corrosion, dampness, heavy rains, Breakage and vibration
7.2	Packing for accessories and spares	Robust wooden nonreturnable packing case with all the above protection & Identification Label
7.3	Packing Identification Label	In each packing case, following details are required:
		i: Individual serial number
		ii: Purchaser's name
		iii: PO number (along with SAP item code, if any) & date
		iv: Equipment Tag no. (if any)
		v: Destination
		vi: Manufacturer/Supplier's name
		vii: Address of Manufacturer/Supplier
		viii: Description and Quantity
		ix: Country of origin
		'x: Month & year of Manufacturing
		xi: Case measurements
		xii: Gross and net weights in kilograms
		xiii: All necessary slinging and stacking instructions
7.4	Shipping	The seller shall be responsible for all transit damage due to improper packing.
7.5	Handling and Storage	Manufacturer instruction shall be followed. Detail handling & storage instruction sheet/ manual needs to be furnished before commencement of supply.

8.0 Deviations

8.1	Deviations from this specification shall be stated in writing with the tender by reference to the Specification clause/GTP/Drawing and a description of the alternative offer. In absence of such a statement, it will be assumed by the Buyer that the Seller complies fully with this specification. Bidder to submit copy of Specification / GTP with company seal & signature on each page.

9.0 Drawing submission

9.1	To be submitted along with bid	The seller has to submit:
		i) GA drawing of battery & battery rack
		ii) Detailed reference list of customers
		iii) Completely filled GTP
		iv) Battery sizing calculation
		v) Manufacturer's quality assurance plan and certification for quality systems
		vi) Type test reports. They shall be considered valid for 5years from date of test performed on product /equipment.
		vii) Complete product catalogue and Manual along with the bid.
		viii) Recommended spare parts and consumable items for five years of operation with prices and spare parts catalogue with price list for future requirements
9.2	After award of contract, seller has to submit mentioned drawings for buyer's	i) Program for production and testing (A)
	Approval(A)/Reference(R)	ii) Guaranteed Technical Particulars(A)
		iii) Battery sizing Calculations
		iv-a) GA drawing
		iv-b) Schematic and wiring drawings
		v) Bill of material
		vi) Installation & commissioning Manual(R)

9.3	Submittals required prior to dispatch	i) Inspection and test reports(R) ii) Test certificates of all bought out items iii) Operation and maintenance Instruction as well as troubleshooting charts/manuals
9.4	Drawing and document sizes	Standard size paper A4
9.5	No of drgs./Documents required at Different stages	As per Annexure-A

Annexure A Scope of supply

1.0 The scope of supply shall include following

1.1 Design, manufacture, testing at manufacturer works before dispatch, packing, delivery and submission of all documentation of the DC Battery set

1.2 Supervision of testing & commissioning of panel at site

1.3 BOQ as following-

Sr No	Purchaser Equipment Tag No/SAP code	Location/Substation name	Unit	Quantity(Battery set)
1		e.g. Santacruz	No	e.g.1
2		e.g. Alaknanda	No	
3				
4				

2.0 Submission of documents-quantity

	Along with offer	For Approval after award of contract	Final after approval
Drawings & GTP	3copies+1softcopy in CD / Pendrive	4copies+1soft Copy in CD / Pendrive	6copies +1 soft copy in CD / Pendrive
Calculations	3copies+1softcopy in CD / Pendrive	4copies+1soft Copy in CD / Pendrive	
Catalogues	1copy+1softcopyin CD / Pendrive		
Instruction manual for the transformer	1copy+1softcopyin CD / Pendrive		
Test Report	2copies+1softcopy in CD / Pendrive		

3.0 Delivery schedule

Delivery period start date - from date of purchase order

Delivery period end date - as per mutual agreement

Material dispatch clearance - after inspection by purchaser

Annexure B Technical particulars (Data by purchaser)

Sr No	Description	Data by purchaser
1	Location of equipment	*e.g.Mumbai/Delhi/Orissa/kerala/ Dahanuetc*
2	Relative humidity	*e.g.95% for Mumbai*
3	DC charger type available	2x100% Float cum boost charger
4	Battery room ventilation	Natural air indoor
5	DC battery set configuration	battery bank shall be connected to 2x100% Float cum boost charger
6	Each DC battery bank rating at 27deg C as per IS (or at 20 deg C as per IEC)	For supplying 100% DC load requirement for 2 hour back up time
7	DC battery bank voltage (i.e. DC load voltage)	
8	DC battery Load (refer annexure E)	
8.1	Load current 'I1' in amp	
8.2	Load current 'I2' in amp	
8.3	Load current 'I3' in amp	
10	Battery floor space available in meter (for2x50%batteryunits)	*Length x width*

Note–letters in *'italic blue'* indicate data to be filled by purchaser

Annexure C Guaranteed Technical Particulars (Data by Supplier)

Sr. No.	Description	Data to be filled by Manufacturer
1	Battery (as per scope of supply annexure A)–Yes/No	
2	Manufacturer battery type	
3	Conformance to design standards as per Specification clause no2.0 – Yes/No	
4	Conformance to design features as per specification clause no 3.0 & 4.0– Yes/No	
5	Submission of deviation sheet for each Specification clause no–Yes/No	
6.1	Battery GA drawing submitted–Yes/No	
6.2	Battery selection/sizing calculation submitted–Yes/No	
7	Battery rating (C5) offered in Ahr	
7.1	Rating at temperature 27 degC as per IS	
7.2	Rating at temperature 20 degC as per IEC	
8.1	Battery rack type offered – steel or FRP	
8.2	Number of steps in a tier	
8.3	Number of tier in rack	
9	Battery bank dimensions in mm (length x Depth x height)	
10	Battery cell weight in kg	
11	Battery cell anode-no. of plates & Thickness in mm	
12	Battery cell cathode-no of plates & Thickness in mm	
13.1	Battery cell nominal voltage	
13.2	Battery cell float charge voltage	
14	Battery cell maximum boost charge voltage	

15	Battery cell end cell voltage	
16	Total battery bank float charging voltage Required in volts	
17.1	Total battery bank boost charging voltage Required in volts	
17.2	Total time required for boost charging From end cell voltage to rated voltage/ capacity	
18	Battery in internal resistance (in Ohms) at Fully charged condition	
19	Heat generated by battery at rated full Load (in Kw)	
20	Electrolyte chemical name	
21	Electrolyte specific gravity at 27 deg C	
22	Recommended topping up frequency (in Weeks or months)	
23	Amount of gas evolution in one full charge Discharge cycle(in litre/Ahr)	
24	Type of separateors used in battery cell	
25	Shelf life period (to retain 90% of energy From full charge condition at 27 degC)	
26	Total battery bank short circuit fault level (in KA)	
27	Battery bank terminal bus bar with Insulating shrouds–Yes/no	

Annexure D Recommended spares (Data by supplier)

List of recommended spares as following–

Sr No	Description of spare part	Unit	Quantity
1		No	
2		No	
3			
4			
5			
6			

Annexure E Typical DC load curve

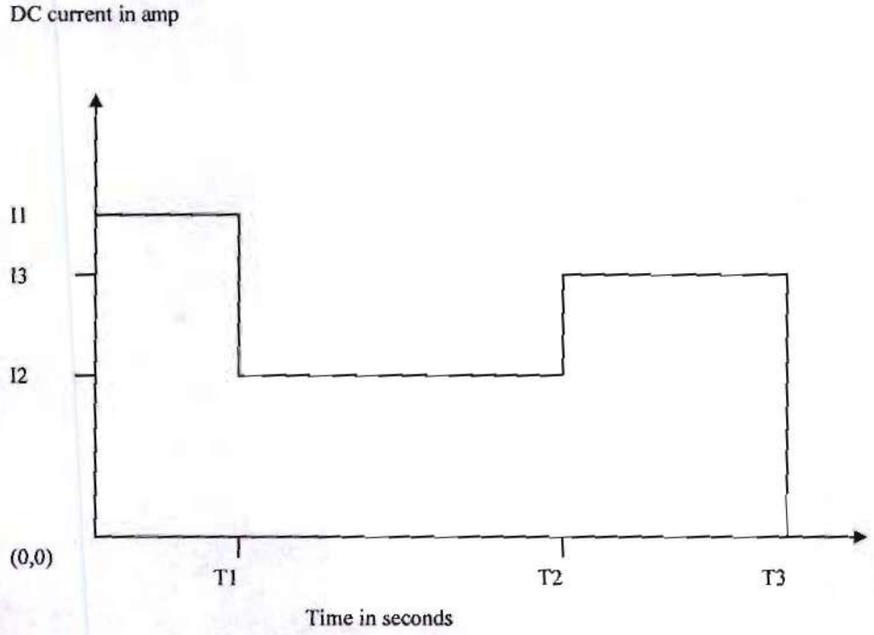

DC Load to be supplied after loss of mains AC supply to float cum boost charger

A. Time T1 = 01 minute (Tripping of all breakers + relay + emergency light + SCADA)

B. Time T2 = 118 minutes (Relay + emergency light + SCADA)

C. Time T3 = 01 minute (closing of all breakers + SCADA + relay + emergency light)

Note -

1) Each battery bank shall be sized for supplying 100% load for a back up time of 2 hour.

BSES

Technical Specification

For

415 V AC Distribution Board

Specification no – BSES-TS-70-ACDB-R0

Rev		0
Page		1 of 17
Date		05 May 2022
Prepared by	Jeena Borana	
	Abhishek Harsh	
	Amar Singh	
Reviewed by	Srinivas Gopu	
	Abhinav Srivastava	
Approved by	Gaurav Sharma	
	Gopal Nariya	

INDEX

1 SCOPE 3
2 STANDARDS & CODES 3
3 SERVICE CONDITIONS 3
4 ACB CONFIGURATION 4
5 CONSTRUCTION 5
6 BUSBAR 7
7 MCCB 7
8 CURRENT TRANSFORMER 8
9 TERMINALS AND WIRING 8
10 METERS, INDICATIONS AND PUSH BUTTONS 9
11 NAME PLATES & MARKINGS 9
12 FINISHING 10
13 APPROVED MAKE OF COMPONENTS 10
14 QUALITY ASSURANCE PLAN, INSPECTION AND TESTING 11
15 PACKING, SHIPPING, HANDLING & SITE SUPPORT 11
16 DEVIATIONS 12
17 DOCUMENT SUBMISSION MATRIX 12
ANNEXURE A GUARANTEED TECHNICAL PARTICULARS 14

1 SCOPE

This specification covers the design, engineering, manufacture, assembly and testing at manufacturer's works and supply of 415V AC Distribution board (ACDB)along with all hardware and accessories required for installation and operation.
Specification covers Type 1 and Type 2 ACDB. Type 1 ACDB is for Grid Substations while Type 2 ACDB is for BSES HT Customers.

2 STANDARDS & CODES

2.1	IS:8623	Specification for factory built assemblies of switchgear & control gear for voltages up to and including 1000V AC/1200 V DC.
2.2	IS 60947-1	Specification for Low-voltage Switchgear and Control gear - Part 2 : Circuit Breakers
2.3	IS:10118	Code of practice for selection, installation and maintenance switchgear and controlgear
2.4	IS:2705	Current Transformers
2.5	IS:3231	Electrical relays for power system protection
2.6	IS:1248	Electrical Indicating instruments
2.7	IS:4794	Switches and push buttons
2.8	IS:6005	Code of practice of phosphating iron and steel
2.9	IS:5082	Wrought Aluminum and aluminum alloys for electrical purposes
2.10	IS 3043	Code of practice for Earthing

3 SERVICE CONDITIONS

3.1	System Configuration	3 Phase 4 Wire with neutral solidly grounded
3.2	Supply Voltage	415 volt +/- 10%
3.3	Supply frequency	50Hz
3.4	Location	Indoor
3.5	Average grade atmosphere	Heavily polluted, Dry
3.6	Maximum altitude above sea level	1000M
3.7	Ambient air temperature	Highest 50Deg C Average 40Deg C
3.8	Minimum ambient air temperature	0 Deg C
3.9	Relative Humidity	100%
3.10	Rainfall	750mm concentrated in four months

4 ACB CONFIGURATION

4.1 TYPE 1 ACDB CONFIGURATION

4.1.1	Incomers	a. Two incomers, each having Motorized 630A MCCB. MCCBs shall have microprocessor based over current and earth fault release. b. Auto changeover shall be provided between the two incomers c. Manual castle keyinterlock required between two incomers d. Castle key for Local /Remote operation			
4.1.2	Outgoing feeders	a. The number of outgoing feeders from AC boards shall be such that each substation equipment is fed by separate feeder (refer below). b. Utilization category of MCBs shall be C.			
	Application	**Type of Switchgear**	**No of Poles**	**Rating (A)**	**Quantity**
4.1.3	Transformer Oil filtration	MCB	4	200	2
4.1.4	Welding(Outdoor)	MCB	2	63	4
4.1.5	Power Socket(Indoor)	MCB	4	32	5
4.1.6	Outdoor Lighting	MCB	4	32	2
4.1.7	Indoor Lighting	MCB	4	32	2
4.1.8	Battery Charger	MCB	4	63	2
4.1.9	BMK	MCB	4	32	8
4.1.10	Marshalling Box(PTR)	MCB	4	32	3
4.1.11	AC Supply	MCB	4	32	2
4.1.12	UPS	MCB	2	16	1
4.1.13	11kV Switchgear	MCB	2	32	3
4.1.14	CRP	MCB	2	32	2
4.1.15	RTU/SCADA	MCB	2	16	2
4.1.16	Fire Fighting	MCB	2	16	2
4.1.17	EPAX	MCB	2	16	1

4.1.18	Power Socket (Outdoor)	MCB	2	16	4

4.2 TYPE 2 ACDB CONFIGURATION

4.2.1	Incomers	a. Two incomers, each having Motorized 400 A MCCB. b. Auto changeover shall be provided between the two incomers c. Manual castle key interlock required between two incomers d. Castle key for Local /Remote operation			
4.2.2	Outgoing feeders	a. The number of outgoing feeders from AC boards shall be such that each substation equipment is fed by separate feeder (refer below). b. Utilization category of MCBs shall be C.			
	Application	**Type of Switchgear**	**No of Poles**	**Rating (A)**	**Quantity**
4.2.3	Welding	MCB	2	63	1
4.2.4	Power Socket	MCB	4	32	3
4.2.5	Outdoor Lighting	MCB	4	16	2
4.2.6	Indoor Lighting	MCB	4	16	2
4.2.7	Battery Charger	MCB	4	32	2
4.2.8	AC Supply	MCB	4	32	2
4.2.9	Switchgear	MCB	2	32	2
4.2.10	RTU/SCADA	MCB	2	16	2
4.2.11	Fire Fighting	MCB	2	16	2

5 CONSTRUCTION

5.1	General construction	a. Board shall be of modular construction with provision for compartmentalization for Incomer and non-compartmentalization for outgoing feeders. b. It shall be free-standing type comprising dust-tight and vermin-proof sheet steel cabinets suitable for indoor installation with IP-54 degree of protection. c. Necessary busbar support insulators, cable glands, cable supports and terminal blocks etc. The board shall be of single front type.

5.2	Material	The Board shall be made out of at least 2.5 mm thickcoldrolled steel sheet (CRCA), suitably reinforced to provide flat level surfaces. No welds, rivets, hinges or bolts shall be visible from outside.
5.3	Equipment Mounting	a) All switches provided on the distribution board shall be on front side of the cabinets, operable from outside. b) All MCBs shall be flush mounted operable from front side of ACDB. c) All instruments and control devices shall be mounted on the front of cabinets and fully wired to the terminal blocks.
5.4	Operating Height	$\leq$ 1.6 meter
5.5	Busbar housing	a) The busbars shall be housed in totally enclosed busbar chambers. b) Incoming connections from the busbar to various feeders shall be designed so as not to disturb cable connections. c) Busbar arrangement should ensure safety of the operation/maintenance personnel and facilitate working on any outgoing module without the need for switching off in-feed to the adjacent modules, as far as possible
5.6	Outgoing Cable Termination	For Outgoing cable termination, vertical arrangement of Terminal Blocks shall be provided with ratings in descending order.
5.7	Cable glands	Compression type cable glands shall be provided to hold the cables to avoid any pressure or tension on the terminal block connections.
5.8	Gland Plate	Gland plate shall be 3.0mm thickwith metallic knockout punches
5.9	Doors	a) The doors of cable cabinets shall be lockablehinged type b) Doors shall be fitted with double lipped gaskets. c) Bus bar side shall have bolted doors.
5.10	Drawing Pocket	Shall be Provided to keep “As Built Drawings”

6 BUSBAR

6.1	Material	Busbar shall be of aluminum.
6.2	Size (phase and neutral)	a) Main busbar - 80x10 sqmm for Type 1 ACDB b) Main busbar – 50X10 sqmm for Type 2 ACDB c) Busbar dropper size Incomers - MCCB-80x10 sqmm for Type 1 ACDB d) Busbar dropper size Incomers - MCCB-50x10 sqmm for Type 2 ACDB
6.3	Supports	The busbar shall be supported by means of durable non-hygroscopic, non-combustible and non-tracking polyester fiberglass material or porcelain. Supports shall be capable of withstanding the maximum short circuit stresses
6.4	Sleeves and shrouds	Busbars shall be encased in heat-shrinkable sleeves of insulating material which shall be suitable for the operating temperature of busbars during normal service. The busbar joints shall be provided with removable thermosetting plastic shrouds.

7 MCCB

7.1	MCCB type	4 pole
7.2	MCCB design ambient temperature	50deg C
7.3	MCCB Housing	Thermoplastic material resistant to fire & abnormal heat , non hygroscopic
7.4	MCCB Terminal	Silver coated copper with phase barriers, spreader terminals & shrouds
7.5	De-rating at 50Deg ambient temperature	No derarting (0%)
7.6	MCCB rated 3 phase short circuit breaking capacity Ics = Icu	36kA minimum at 415v and 50Hz
7.7	MCCB rated 3 phase short circuit withstand capacity, Icw	8kA for 1sec
7.8	MCCB SC making current capacity	75kA peak
7.9	MCCB rated insulation level	1000V
7.10	MCCB mechanical & electrical endurance	As per IS 13947 / IEC
7.11	MCCB utilization category	B as per IS / IEC 947
7.12	MCCB indications	ON, OFF & TRIP
7.13	MCCB protection	MCCBs shall have microprocessor based over current and earth fault release.

7.14	Tripping characteristic required	
7.14.1	Overload setting	Range 60-100%In (Set on 95%)
7.14.2	Short Circuit setting	Range 200-1200%In (Set on 300%)
7.14.3	Earth fault setting	To be provided
7.15	MCCB Clearances in air	As per table XIII of IS 13947-1
7.16	MCCB temperature rise limits	As per table 2 & 3 of IS 13947-1
7.17	MCCB Ingress Protection	IP2X Minimum (pollution degree minimum 2)
7.18	MCCB additional features	Sealing/padlocking of operating knob in OFF position Sealing/padlocking of operating knob in OFF position isolation suitable with positive contact

8 CURRENT TRANSFORMER

8.1	Type	Cast-resin type, Class-E insulation, rated for 120% current continuous
8.2	Provision	Shall be provided in incomer for metering. Separate Neutral CT shall be connected in the neutral for detecting earth fault for both the incomer.
8.3	Secondary current	5A
8.4	Metering CT Class	1.0
8.5	Burden	Based on requirement

9 TERMINALS AND WIRING

9.1	Secondary Wiring	
9.1.1	Grade and type	1100 V grade, PVC insulated, FRLS type stranded flexible copper wire.
9.1.2	Ferruling	Each wire shall bear an identifying ferrule or tag at each end or connecting point.
9.1.3	Size	Appropriate size copper based on rated current and application subject to a minimum of 2.5sqmm copper
9.2	Terminals	Terminals of appropriate size shall be provided inside each cabinet for incoming and outgoing cables.
9.2.1	Grade	1100 V grade, molded piece terminals complete with insulated barriers, washers, nuts and lock nuts.
9.2.2	Power Terminals type	Stud type, nut driver operated

9.2.3	Control terminals type	Stud type, screw driver operated suitable for minimum 6sqmm wire.
9.2.4	Spare terminals	20% spare terminals should be provided in each terminal block.
9.2.5	Accessibility	Placement of terminals shall enable proper cable termination. Terminals shall be readily accessible for inspection and maintenance.
9.2.6	Marking	The terminals shall be serially numbered to facilitate installation and maintenance.
9.3	Cable troughs	Shall be provided for wiring of each terminal block with 50% spare capacity

10 METERS, INDICATIONS AND PUSH BUTTONS

10.1	Meters	
10.1.1	Multifunction Meter	For incomer feeders. Meter should have facility to store peak load current in memory.
10.1.2	Type	Digital with inbuilt phase selector
10.1.3	Communication Protocol	RS485 on MODBUS
10.1.4	Accuracy Class	1.0
10.1.5	Auxiliary supply	240VAC with 10% tolerance
10.2	Indicating lamps	Indicating lamps shall be of low wattage cluster LED type.
10.2.1	Incomer/ Outgoing On	Red
10.2.2	Incomer/ Outgoing Off	Green
10.2.3	Incomer/ Outgoing Trip	Amber
10.3	Push buttons	For manual operation of incomer

11 NAME PLATES & MARKINGS

11.1	Panel nameplate	Panel shall have a nameplate clearly indicating the following: a) Manufacturer's Name & Country: b) Panel Serial No.: c) Customer Name: BSES Yamuna / Rajdhani Power Ltd d) PO No. & date: e) Type of Panel: f) Current rating: g) Rated Voltage and Frequency: h) Month and year or Manufacture: MM/YYYY i) Guarantee period:
11.2	Feeder nameplate	Large and bold name plate carrying the feeder identification

		shall be provided on the top of each module. Blank insert type name plates shall be provided on each outgoing feeder.
11.3	Equipment nameplate	a) All equipment mounted on front side as well as equipment mounted inside the panels shall be provided with individual name plates with equipment designation engraved. b) All front mounted equipment shall also be provided at the rear with individual name plates engraved with tag numbers corresponding to the one shown in the panel internal wiring to facilitate easy tracing of the wiring.
11.4	Danger plate	Panel shall have a danger plate of anodized aluminum clearly indicating the danger logo and voltage details.
11.5	Material	Non-rusting metal or 3 ply lamicoid. Nameplates shall be black with white engraving lettering. Stickers are not allowed.
11.6	Fixing	All nameplates/rating plates shall be riveted to the panels at all four corners. Bolting/screwing is not acceptable.
11.7	Markings	Each switch shall bear clear inscription identifying its function. Similar inscription shall also be provided on each device whose function is not otherwise identified. If any switch or device does not bear this inscription separate nameplate giving its function shall be provided for it. Switch shall also have clear inscription for each position indicating e.g. Trip-Neutral close, ON-OFF etc.

12 FINISHING

12.1	Primer	Two coats
12.2	Finish	Powder Coating
12.3	Colour shade	RAL 7032 (Siemens Grey)
12.4	Paint thickness	70 microns (minimum)

13 APPROVED MAKE OF COMPONENTS

13.1	Switch	Siemens / L&T (Salzer)
13.2	HRC Fuse Links	GE/ Siemens/ L&T
13.3	Meters	Rishabh/Schneider/AE
13.4	AC Contractors	L&T/Siemens/Telemechanique/GE/ABB
13.5	Terminals	Connectwell/Elmex/Wago/Phoenix
13.6	Push buttons / Actuator	L&T/Siemens/Vaishno/Schneider
13.7	MCCB	L&T/Siemens/ ABB/GE/Schneider
13.8	MCB	Datar/Legrand/Hager/Schneider/ABB
13.9	Indicating lamps	Vaishno/Binay/Teknic/Siemens/Mimic/C&S

14 QUALITY ASSURANCE PLAN, INSPECTION AND TESTING

S No.	Parameters	Technical Requirements
14.1	Quality Assurance Plan	QAP Shall be submitted by vendor for approval. Inspection and testing of the material shall be carried out accordingly.
14.2	Type test	Equipment should be of type tested quality only, type test certificate to be submitted along with offer. Test reports from CPRI/ERDA accredited laboratory only acceptable.
14.3	Routine /Acceptance test	As per relevant Indian standard
14.4	Inspection	a) The buyer reserves the right to inspect equipment at the Seller's works at any time prior dispatch, to verify compliance with the specifications. b) In-process and final inspection call intimation shall be given in 15 days advance to purchaser. c) In the event of any discrepancy in the test reports i.e. test reports not acceptable or any type tests (including special /additional tests, if any) not carried out, same shall be carried out without any cost implication to BSES before dispatch of equipment.
14.5	Test certificates	Test certificates (routine and acceptance) shall be submitted along with the dispatch documents.

15 PACKING, SHIPPING, HANDLING & SITE SUPPORT

15.1	Packing Protection	The packing shall be fit to withstand rough handling during transit and storage at destination. The test set should be properly protected against corrosion, dampness & damage.
15.2	Packing for accessories and spares	Robust non-returnable packing case with all the above protection & identification Label. The bidder should get the packing list approved before dispatching the material.
15.3	Packing Identification Label	On each packing case, following details are required: a) Individual serial number b) Purchaser's name c) PO number (along with SAP item code, if any) & date d) Equipment Tag no. (if any) e) Destination f) Manufacturer / Supplier's name g) Address of Manufacturer / Supplier / it's agent h) Description i) Country of origin j) Month & year of Manufacturing

		k) Case measurements l) Gross and net weight m) All necessary slinging and stacking instructions
15.4	Shipping	The seller shall be responsible for all transit damage due to improper packing.
15.5	Handling and Storage	Manufacturer instruction shall be followed.
15.6	Detail handling & storage instruction sheet / manual to be furnished before commencement of supply.	

16 DEVIATIONS

16.1	Deviation	Deviations from this Specification shall be stated in writing with the tender by reference to the Specification clause/GTP/Drawing and a description of the alternative offer. In absence of such a statement, it will be assumed that the bidder complies fully with this specification. No deviation will be acceptable post order.

17 DOCUMENT SUBMISSION MATRIX

Drawing submission shall be as per the matrix given below.

- All documents/ drawing shall be provided in soft copy only through mail.
- Language of the documents shall be English only.
- Incomplete submission shall be liable for rejection.
- Document check sheet compliance shall be the first sheet for each submission stage i.e.Technical bid, Drawing Approval, Pre Dispatch
- No submission is acceptable without check list compliance.
- Order of documents shall be strictly as per the check list.
- Any drawing not included in the below table but necessary for detailed engineering shall be deemed to be included in bidder's scope.

S No.	Documents to be submitted	Bid	Approval	Pre Dispatch
17.1	Guaranteed Technical Particulars (GTP)	Required	Required	
17.2	Deviation Sheet, if any	Required	Required	
17.3	GA drawing, SLD, Wiring Diagram	Required	Required	

S No.	Documents to be submitted	Bid	Approval	Pre Dispatch
17.4	Type test reports(not more than 5 years old) from CPRI/ERDA	Required	Required	
17.5	Reference List of major customers using the offered product from last 5 years	Required		
17.6	Performance certificates executed in last 5 years			
17.7	Make of Raw Materials	Required	Required	
17.8	Manufacturer's Quality Assurance Plan		Required	
17.9	Complete product catalogue and Manual		Required	Required
17.10	Test certificates of all raw materials			Required
17.11	Inspection and routine test reports, carried out in manufacturer's works			Required

ANNEXURE AGUARANTEED TECHNICAL PARTICULARS

S. No.	Description	Specification requirement	Vendor Data
1.0	**GENERAL FEATURES**		
1.1	Make		
1.2	Type		
1.3	Reference Standard		
1.4	Rated Operational voltage	415V AC ± 10%	
1.5	Rated Nominal Current	630A	
1.6	Rated frequency	50 Hz (+3%, -5%)	
1.7	Rated Insulation voltage	1100V	
1.8	Rated Impulse withstand voltage	8kV	
1.9	Service supply for heating, lighting and power sockets	240VAC±10%,	
1.10	Mounting	Floor (Free standing)	
1.11	Connections	Cable entry – Bottom	
1.12	Configuration	Single front	
1.13	Enclosure thickness		
1.13.1	Load Bearing Member	>=2.5mm	
1.13.2	Doors and Covers	>=2 mm	
1.14	Enclosure Material	CRCA Sheet/GI	
1.15	Enclosure degree of protection	IP 54	
1.16	Mechanical safety interlocks	As specified in technical specification	
1.17	Incomer Power Cable Termination	2Rx4Cx300sqmm	
	Outgoing Cable Termination	a) 200A MCB- 4Cx150sqmm b) 63A MCB- 4Cx50sqmm c) 32A MCB- 4Cx25 sqmm d) 16A MCB- 2Cx10 sqmm	
	Cable Termination Type	From Bottom of Panel	
	Clearance	150 mm clearance to be maintained from the bottom of the TB and the gland plate	
1.18	Paint shade	RAL 7032 (Siemens Grey)	
1.19	Typical vertical section (Overall dimension (mm) and weight (Kg))	Required	
1.19.1	Incomer		
1.19.2	Outgoings		
1.20	Dimensions of the ACDB Panel	L (mm) X D (mm) X H (mm)	

S. No.	Description	Specification requirement	Vendor Data
1.21	Weights of the ACDB Panel	(in kg.)	
1.22	Marking on the panel	As per the specification	
2.0	**INCOMER MCCB**		
2.1	Make & Model of MCCB	Required	
2.2	Catalogue of MCCB	Required	
2.3	Continuous Current at 40 deg C/ 50 deg C	630A	
2.4	Rated ultimate breaking capacity at rated voltage	50kA	
2.5	Rated service breaking capacity Ics	Ics = 100% Icu at rated voltage	
2.6	Rated making current	Icm = 220% Icu	
2.7	Utilization Category	A	
2.8	Overload setting	50 -100% (Inverse time characteristics)	
2.9	Overcurrent setting	200-1000% (Instantaneous characteristics)	
2.10	Earthfault setting	20-100% (Instantaneous)	
2.11	Dimension(HxWxD)	Required	
2.12	Weight	Required	
3.0	**BUS AND BUS TAPS**		
3.1	Make		
3.2	Material and grade of buses and joints	High conductivity electrolytic grade aluminum	
3.3	Reference standard		
3.4	Continuous Current (at site condition, 50°C ambient) within cubicle	630A	
3.5	Cross sectional Area		
3.6	DC resistance	ohm/m/ph	
3.7	Skin-effect ratio		
3.8	Reactance	ohm/m/ph	
3.9	Losses-middle phase	w/m/ph	
3.10	Minimum clearance of bus bar and joints	Required	
3.10.1	Phase to phase (mm)		
3.10.2	Phase to earth (mm)		
3.11	Bus bar insulation	a. Heat shrinkable sleeves rated for maximum operating voltage b. Cast resin shrouds for joint	

S. No.	Description	Specification requirement	Vendor Data
3.12	Bus joints	Silver	
3.13	Bus bar support insulator	Required	
3.13.1	Spacing (mm)		
3.13.2	Make		
3.13.3	Type		
3.13.4	Reference standard		
3.13.5	Voltage class (kV)		
3.13.6	Minimum creepage distance (mm)		
3.13.7	Cantilever strength (Kg/sq.cm.)		
4.0	**CURRENT TRANSFORMER**		
4.1	Make		
4.2	Type	Resin Cast	
4.3	Reference standard		
4.4	CT ratios		
4.5	Class of Insulation	Class-E	
4.6	Protection class	5P20	
4.7	Metering class	5	
4.8	VA burden for Relaying CT-Incomer	Based on requirement.	
5.0	**AMMETERS/MULTIFUNCTION METERS AND VOLTMETERS**		
5.1	Make & Model no.		
5.2	Type	Digitalwith inbuilt phase selector	
5.3	Communication Protocol	RS485 on MODBUS	
5.4	Accuracy class	1	
6.0	**CONTROL & INDICATIONS**		
6.1	Push button		
6.1.1	Make and model no.		
6.1.2	Type	Flush mounted type with touch proof terminals	
6.2	LEDs		
6.2.1	Make & Model no.		
6.2.2	Type	Flush mounted type with touch proof terminals	
7.0	**TERMINAL BLOCKS**		
7.1	Make & Model no.		
7.2	Spare terminals	Equal to 20% of active terminals in each TB	
7.3	Power terminals	Stud type, screw driver operated	

S. No.	Description	Specification requirement	Vendor Data
7.4	Control terminals	Stud type, screw driver operated suitable for minimum 6sqmm wire.	
8.0	**TESTS**		
8.1	Confirmation of routine tests to be performed as per IS 60947	Yes/No	
8.2	IP 55 test shall be carried out during inspection	Yes/No	
8.3	Confirmation of Type tests to be performed (or report submitted) as per IS 60947	Type test report no./date	
8.4	Confirmation of Acceptance tests to be performed during inspectionas per IS 60947	Yes/No	
8.5	Temperature rise test to be carried out at NABL accredited lab.	Yes/No	
9.0	Deviation sheet against each clause of the specification	To be submitted	

BSES

Technical Specification

For

Grounding and Lightening Protection System

Specification no – BSES-TS-76-GES-R2

Rev:		2
Date:		23 September 2025
Prepared by	Supriya Raina	
Reviewed by	Uttam Shukla	
Approved by	Deepti Sharma	

INDEX TABLE

INDEX TABLE

1. SCOPE 3
2. STANDARDS & CODES 3
3. REQUIREMENT OF EARTHING 3
4. SPECIFICATION OF EARTHING MATERIALS 6
5. SIZES OF THE EARTHING MATERIALSFOR EQUIPMENT EARTHING 7
6. TESTING AND INSPECTION 9
7. DEVIATIONS 9
8. DOCUMENTS SUBMISSION 9
9. GUARANTEED TECHNICAL PARTICULARS 10
ANNEXURE A1 : REFERENCE FAULT LEVEL 11

1. SCOPE

This specification covers the guidelines of earthing & lightening protection at 66/11, 33/11, 66/33/11 kV Grid substation and the technical requirements of material required for earthing system.

2. STANDARDS & CODES

2.1.	CEA guidelines	Technical standards for construction of electrical plants and electrical lines
2.2.		IE Rules of 1956
2.3.	IEEE Std 80	IEEE guide for safety in AC substation grounding
2.4.	CBIP :2006 – publication no. 229	Manual on substation layout
2.5.	IS 3043: 1987	Code of practice for earthing
2.6.	IS 2309 (1989)	Code of practice for the protection of buildings and allied structures against lightning [ETD 20: Electrical Installation]
2.7.	IS 2629 (1985)	Recommended practice for hot dip galvanizing of Iron & Steel
2.8.	IS 2633 (1986)	Method for testing uniformity of coating on zinc coated article
2.9.	IS 5358 (1969)	Specification for hot dip galvanized coating on fasteners
2.10.	IS 4759 (1996)	Specification of Hot dip zinc coatings on structural steel and other allied products
2.11.	IS 1239 (2004)	Steel tubes, tubular and other wrought steel fittings- specification
2.12.	IEC 62561-2	Requirements for conductors and earth electrodes
2.13.	IEC 62561-7	Requirements for earthing enhancing compounds
2.14.		Handbook on Electrical Earthing (Ministry of Railways)

3. REQUIREMENT OF EARTHING

3.1.	Primary guidelines	Following are primary guidelines for a good earthing system in a Grid substation: a. The impedance to ground should be as low as possible. In general it should not exceed **0.5ohm**. b. The step and touch potentials shall be within safe limits. c. The contractor shall do the calculation for number of earthing rods being used in a substation for achieving the desired earth resistance.

3.2.	Design Parameters	Earthing Calculation parameters shall be taken as: 1) Duration of shock current ts=1sec. 2) Top Gravel resistivity shall be 3000 Ohm Meter. 3) Split/ Diversion Factor shall be considered as 1 4) Earth conductor/ electrodes size calculation based upon corrosion considered for next 40 years. 5) The final diameter of earth conductors/rod shall be of calculated dia or 40 mm min; whichever is maximum (prescribed in clause 5)
3.3.	Earthing lead size	a. The actual size of earthing lead will depend on the maximum fault current which the earthing lead will be required to carry safely. b. Please refer **AnnexureA1** for HT fault level.
3.4.	Earthing type	a. Rod earthing shall be provided for the Grid substation. b. The size of the rod depends upon the current to be carried and the type of the soil. Soil resistivity testing will be carried out by vendor. c. The Earth Electrode should be embedded vertically. Wherever hard rock is encountered, the rod can be inclined at an angle of about 30deg to the horizontal as per clause 9.2.2 of IS 3043. d. The vertically driven rods shall be interconnected with each other using horizontal grid conductors.
3.5.	Earth Pit	a. As per clause 20.5.2 of IS 3043, the minimum distance between the vertical earth electrodes shall not be less than the length of rod. b. Minimum of 1m distance of earth pit from electrical equipment and structures shall be maintained. c. The earth pits shall be backfilled with earth enhancing material as per Drawing . d. Treated Earth pits shall be used where earth resistance value is getting over the prescribed value in specification i.e. 0.5 ohms. e. Treated Pipe earthing required for 2 nos. each for PTR & Station TRF neutral and RTU/ SCADA. f. 50% quantity of the total earth electrodes to be provided with earth enhancing material (Terec++/ marconite).
3.6.	Horizontal Conductor	a. The entire earth rod driven in ground vertically shall be interconnected with earth grid conductors horizontally under the ground. b. The Horizontal conductors shall be laid 600mm below FGL c. Minimum earth coverage of 300 mm shall be provided between the Horizontal conductor and the bottom of trench/foundation/underground pipe at the crossing. d. Horizontal conductors around a building /switchyard fence shall be buried outside the boundary at a minimum distance of 2000 mm. e. Risers shall be provided 300mm above the ground level for equipment earthing. Two number treated earth pits shall be provided with riser for connection of transformer neutral. f. Welding between rods to flat, flat to flat should be arc welding type.For rust protection the welds should be treated with red lead compound and afterwards thickly coated with bitumen compound. g. Wherever bolted connection is done, it shall be done through two bolts at each joint to ensure tightness and avoid loosening with passage of time.

		h. Where a 66 kV overhead line terminates at the substation, a metallic continuity between the end tower and the substation earth grid should be established with two independent connections. i. To ensure good welding, it should be carried out only after scratching off the galvanization, dirt, grease etc by thorough cleaning of contact surface. After welding it will be made with anticorrosive zinc rich paint.
3.7.	Equipment earthing	a. GI strips shall be used for the equipment earthing. b. Two separate and distinct earth connections shall be provided for earthing of electrical frameworks. c. The connection of GI strip with riser of earth mat shall be electric arc welding arrangement; connection of equipment with earthing end shall be double bolted arrangement. d. The transformer neutral shall be earthed with two independent grounding conductors connected to two separate earth pits. e. Fence within the earth grid shall be bonded to the plant earth system at regular interval not exceeding 10 meters. Fence gate shall be separately earthed with flexible Copper braid to permit movement. f. Bolted connection shall be made only for earthing of equipment/devices and for some removable structures. The contact surfaces shall be thoroughly cleaned before connection to ensure good electrical contact. g. Cable armor shall be earthed at both ends for multi core cables. For single core cables, the earthing shall be at switchgear end only. h. For prefabricated cable trays, a separate ground conductor shall run along the entire length of cable tray and shall be suitably clamped on each cable tray at periodic intervals. Each continuous laid out lengths of cable tray shall be earthed at minimum two places by GS flats to Owner's earthing system, the distance between earthing points shall not exceed 30 metre. Wherever earthmat is not available Contractor shall do the necessary connections by driving an earth electrode in the ground. i. Earthing conductor's crossings the road shall be installed at 1000 mm depth and where adequate earth coverage is not provided it shall be installed in Hume pipes. Earthing conductors embedded in the concrete floor of the building shall have approximately 50mm concrete cover. j. Metallic stairs and hand rails shall be earthed as for columns. Additionally a 50x6 GI flat shall run the entire length of the stairs. The GI flat shall be welded to the stairs and hand rails at intervals of 1500 mm. k. The main earth conductor shall be securely fixed to the columns /walls/trays by welding /clamping at the intervals not exceeding 1500 mm. The earth conductors shall be interconnected between them and to the main earth grid through risers. l. **In case of GIS substation, earthing rods to be considered in RCC floor as per GIS OEM recommendation.**
3.8.	Lightening protection	a. Direct stroke lightning protection (DSLP) shall be provided in the EHV switchyard by shield wires/ High mast spike gaurd. The final arrangement shall be decided after approval of the DSLP

		calculations. The Contractor is required to carry out the DSLP calculations and submit the same to the Owner for approval of the same at detailed engineering stage after award of contract. b. DSLP protection shall be provided for control room building as per design calculation following Indian standards and level of protection shall be "level 1" and size of the strip shall be as per relevant IS/relevant document. c. Connection between each down conductor & Test link shall be located approximately 2000mm above ground Level. d. Separate earth electrodes shall be provided for building DSLP connecting the down conductors to the risers & finally to the Earthmesh. Minimum electrodes to be provided – 4 Nos.

4. SPECIFICATION OF EARTHING MATERIALS

4.1.	GI earthing strip	a. Fully galvanized iron strips shall be used conforming to IS 2629. b. The zinc deposition shall not be less than 610gm/sqm of the galvanized surface area of the MS Earthing strips. c. The zinc coating used for the galvanization shall be of 9.99 % purity grade as per IS 209. d. All the galvanized material shall be checked for uniformity and weight as per IS. e. The standard length of galvanized iron earthing strip shall be minimum 7Mtrs.
4.2.	Vertical and Horizontal Earth Electrode	a. Ground electrode shall be 3 m long MS rod of required size complying with Zinc coating and earth enhancement compound as per IEC 62561-7. b. Rod shall be tested and certified from CPRI/ERDA for a short circuit current withstanding of desired value. c. There shall be following marking on the rod-Dimension Detail, product model no, Reference number of certification. d. It shall have high corrosion resistance and shall eliminate electrolytic action.

5. SIZES OF THE EARTHING MATERIALSFOR EQUIPMENT EARTHING

S.No.	Title	Material	Sizes of the earthing	Type	UOM	No of Lead
A	**Main Earthing Grid**					
5.1	Vertical Rods	MS rod	40	Rod	mm (dia)	
5.2	Above Ground risers	GI	50x10	Flat	Sqmm	2
5.3	Horizontal Rods	MS rod	40	Rod	mm (dia)	
5.4	Treated Earth Pit	MS rod	40	Rod	mm (dia)	
B	**Power Transformers**					
5.5	Frame	GI	75X10	Flat	Sqmm	2
5.6	Marshalling Box	GI	50X6	Flat	Sqmm	2
5.7	Radiator	GI	50X6	Flat	Sqmm	2
5.8	Neutral	GI	75X10	Flat	Sqmm	2
5.9	Fan	GI		As per sizes mentioned for fans		
B	**Capacitor Bank**					
5.10	Capacitor Bank Structure	GI	50X6	Flat	Sqmm	2
5.11	Capacitor unit and reactors	GI	50X6	Flat	Sqmm	2
B	**Outdoor equipments**					
5.12	Outdoor Circuit breaker, CT, PT & CVT	GI	50X6	Flat	Sqmm	2
5.13	Secondary terminal Box of outdoor CT, PT & CVT	GI	50X6	Flat	Sqmm	2
5.14	Isolator Mechanism box, earth switch box	GI	50X6	Flat	Sqmm	2
5.15	Gantry tower and structure	GI	75X10	Flat	Sqmm	2
5.16	Earthing Strip along with Cable	GI	50X6	Flat	Sqmm	2

	Tray					
5.17	Electronic Earthing	Separate design and installation for all communication devices and electronic equipments including SCADA RTU, MOXA, Router/Switch. As per recommendation of SCADA vendor				
C	**11 KV System**					
5.18	11 KV Swithcgear	GI	50X6	Flat	Sqmm	2
5.19	11 KV Bus Duct	GI	50X6	Flat	Sqmm	2
5.20	11 KV Cable Box	GI	50X6	Flat	Sqmm	2
D	**415 V System**					
5.21	ACDB	GI	50X6	Flat	Sqmm	2
5.22	Station Trafo Frame	GI	50X6	Flat	Sqmm	2
E	**DC System**					
5.23	Battery Charger	GI	50X6	Flat	Sqmm	2
5.24	DCDB	GI	50X6	Flat	Sqmm	2
F	**Other Electrical Items**					
5.25	Three phase receptacles, welding outlet	GI	50x6	Flat	Sqmm	1
5.26	C&R Panel	GI	50X6	Flat	Sqmm	2
5.27	Push Button	GI	8	Wire	Swg	1
5.28	Cable Trays(one run along the tray section)	GI	50X6	Flat	Sqmm	2
6	**Other Non Electrical Items**					
5.29	Railway Tracks	GI	50x6	Flat	Sqmm	At suitable Points
5.30	Metallic noncurrent carrying structures like stair case	GI	50x6	Flat	Sqmm	1
5.31	Columns, Structures	GI	50X6	Flat	Sqmm	2

5.32	Steel pipe racks	GI	50x6	Flat	Sqmm	1
5.33	Fence/Gate	GI	50X6	Flat	Sqmm	As per clause 3.7 (e)
5.34	Hand Rail	GI	8	Wire	Swg	1

6. TESTING AND INSPECTION

6.1.	Earthing materials	a. The purchaser reserves the right to inspect the material at the time of tests. All tests shall be performed in the presence of BYPL/BRPL representative. The bidder shall give intimation in advance to witness the test. b. Acceptance test for GI earthing strips – Tests for Visual examination, dimensional verification and galvanization shall be witnessed at the time of inspection. c. Acceptance test of Earth enhancement compound – Tests for leaching, sulphur determination, corrosion and resistivity shall be done as per IEC 62561-7 d. Type test reports of the earthing materials from CPRI/ERDA/Equivalent lab shall be submitted.
6.2.	Measurement of Earth resistance	a. After the completion of work ground resistance of each installation shall be measured by BYPL/BRPL/Contractor. b. The measurement of resistance shall be witnessed and signed by representative of BYPL/BRPL as well as the contractor. The test certificates shall be generated for each installation clearly indicating the details of the transformer, name of the substation, location, district, serial no. of testing equipment and name of testing engineer. c. The desire ground resistance shall be measured after interconnection of earth pits is completed. The value of earth resistance shall not be more than **0.5 ohm**. d. In case where this value exceeds 0.5 ohms, the earthing design shall be redesigned. The pit location, earth electrode, soil treatment, earth conductor, GI strip used shall be checked whether properly used at site. If not, these shall be changed as per the redesigned plan.

7. DEVIATIONS

7.1.	Deviation	Deviations from this Specification shall be stated in writing with the tender by reference to the Specification clause/GTP/Drawing and a description of the alternative offer. In absence of such a statement, it will be assumed that the bidder complies fully with this specification. No deviation will be acceptable post order.

8. DOCUMENTS SUBMISSION

The bidder has to submit the following documents along with bid:-

8.1.	Complete earthing calculation
8.2.	Complete product catalogue, Manual and calibration certificate of the equipment
8.3.	Type test reports
8.4.	Deviation Sheet (if any)

9. GUARANTEED TECHNICAL PARTICULARS

S. No	Parameter	BYPL/BRPL Requirement	Vendor Data
9.1	Rod to Strip welding	Arc Welding	
9.2	Zinc deposition of GI earthing Strip	610gm/sqm	
9.3	Length of GI Strip	7m (Minimum)	
9.4	Diameter of MS Rod	40 mm MS rod/calculated diameter; whichever is maximum.	
9.5	CPRI/ERDA Certification of Earthing material	Test certificate to be provided	
9.6	Coating on earthing material	610gm/sqm	
9.7	Length of MS rod	3 m	
9.8	Purity of Copper	NA	
9.9	Short circuit withstand test of Rod	31.5kA	
9.10	Marking on the rod-Dimension Detail, product model no, Reference number of certification	Sample Required	
9.11	ROHS Certificate from NABL accredited lab for not having toxic chemical in earth enhance material	Test certificate to be provided	
9.12	Resistivity of earth enhancing material	0.12 ohm-m(Max)	
9.13	Welding	Arc welding	

9.14	Make of Steel	SAIL/ESSAR/TATA	

ANNEXURE A1 : REFERENCE FAULT LEVEL

Voltage Level(kV)	Design Fault Level
66/11	31.5 KA
33/11	25 KA

BSES

Technical Specification of

LT Power Cable(Single & Multi-Core)

Specification no – BSES-TS-01-LTPC-R0

Rev:		0
Date:		31 Mar 2022
Prepared by	Abhishek Vashistha	
	Rohit Patil	
Reviewed by	Puneet Duggal	
	Amit Tomar	31/03/2022
Approved by	Gaurav Sharma	
	K. Sheshadri	31/3/22

INDEX

Contents

1.0 SCOPE OF SUPPLY 3
2.0 CODES & STANDARDS 3
3.0 CABLE DESIGN 4
4.0 CABLE DRUM 6
5.0 PACKING, SHIPPING, HANDLING & STORAGE 7
6.0 QUALITY ASSURANCE, TESTING& INSPECTION 7
7.0 DOCUMENT SUBMISSION MATRIX 8
8.0 PROGRESS REPORTING 9
9.0 DEVIATION 10
10.0 Annexure -A 11
11.0 ANNEXTURE- B 14
12.0 ANNEXTURE – C 18
13.0 ANNEXTURE – D 19

1.0 SCOPE OF SUPPLY

The specification covers design, manufacture, shop testing, packing and delivery of 1100 Volts grade, Aluminium conductor XLPE insulated power cables.

2.0 CODES & STANDARDS

The cables shall be designed, manufactured and tested in Accordance with the following Indian & IEC standards.

2.1	IS- 7098 (Part-1)	Cross linked polyethylene insulated PVC sheathed cables for working voltages upto and including 1100V.
2.2	IS- 6474	Polyethylene insulation & sheath of electric cables.
2.3	IS- 5831	PVC insulation and sheath of electrical cables.
2.4	IS : 10810	Methods of tests for cables.
2.5	IS : 8130	Conductors for insulated electrical cables and flexible cords.
2.6	IS : 3975	Low carbon galvanized steel wires, formed wires and tapes for armouring of cables.
2.7	IS- 4026	Aluminum ingots, billets and wire bars (EC grade)
2.8	IS-5484	EC Grade aluminium rod produced by continuous casting and rolling
2.9	IS : 10418	Specification for drums for electric cables.
2.10	IS : 3961	Recommended current ratings for cables.
2.11	IS:1255	Installation and Maintenance of power cables upto and including 33 kV rating.
2.12	IS:4826	Specification for hot-dipped galvanized coatings on round steel wires
2.13	IS:1717	Metallic Materials – Wire – Simple torsion test
2.14	IEC 60228	Conductors of insulated cables. Guide to the dimensional limits of circular conductors.
2.15	IEC 60331	Fire resisting characteristics of electric cables.
2.16	IEC 60332 – 3	Tests on electric cables under fire conditions. Part 3: Tests on bunched wires or cables.
2.17	IEC 60502	Extruded solid dielectric insulated power cables for rated voltages from 1kV to 30 kV.
2.18	IEC 60754 – 1	Test on gases evolved during combustion of materials from cables. Part 1: Determination of the amount of halogen acid gas evolved during combustion of polymeric material taken from cables.
2.19	IEC 60811	Common test methods for insulating and sheathing materials of electric cables
2.20	IEC 60885	Electric test methods for electric cables
2.21	IEC 60304	Standard colours for insulation for low frequency cables and wires.
2.22	IEC 60227	PVC insulated cables of rated voltages up to and including 460/760 V.

2.23	IEC 1034	Measurement of smoke density of electric cables burning under defined conditions
2.24	ASTMD 2843	Standard Test Method for density of Smoke from the burning or decomposition of cables
2.25	ASTM 2863	Standard Test Method for measuring of minimum oxygen concentration
2.26	IEC 60754-1	Test on gases evolved during combustion of materials for cables. Part 1 – Determination of the Halogen Acid gas Content
2.27	IS 1554 part 1	Specification for PVC insulated (Heavy duty) Electric cable

3.0 CABLE DESIGN

Description of each item mentioned in the specification (the text, BOQ, GTP or any site specific requirement) shall be followed along with IS: 7098 – P1

<table>
<tr><td>3.1</td><td>Conductor</td><td>a) Electrolytic Grade Stranded Aluminium Conductor
b) Grade: H2 as per IS: 8130/1984
c) Class 2
d) Chemical Composition as per IS 4026
e) Shape& Size:
<table>
<tr><th>S. no.</th><th>Shape</th><th>Single core (sq.mm)</th><th>Multi core (sq.mm)</th></tr>
<tr><td>1</td><td>Compacted Circular</td><td>• 1cx25
• 1cx95
• 1cx300
• 1cx630
• 1cx1000</td><td>• 2cx10</td></tr>
<tr><td>2</td><td>Sector</td><td>---</td><td>• 2cx25
• 4cx25
• 4cx50
• 4Cx150
• 4Cx300
• 4Cx400</td></tr>
</table></td></tr>
<tr><td>3.2</td><td>Insulation</td><td>Extruded XLPE insulation as per IS : 7098 part-1</td></tr>
<tr><td>3.3</td><td>Core Identification</td><td>a) Single Core Cable – Natural
b) Two Core Cable – Red & Black
c) Four Core Cable – Red, Yellow, Blue and Black</td></tr>
<tr><td>3.4</td><td>Inner Sheath</td><td>a) For Single Core Cable – Inner Sheath Not Required
b) For 2 Core cable- Pressurized Extruded, Black PVC type ST-2 (IS 5831-1984)
c) For 4 core cable –Extruded Black PVC type ST-2 (IS 5831-1984)</td></tr>
<tr><td>3.5</td><td>Armour</td><td>a) For 2C X 10 mm^2 – Galvanized Steel round wire.
b) For all sizes above 10 mm^2-Galvanized Steel Strip
c) Armour not required for single core cables
d) Minimum area of coverage of armouring shall be 90%</td></tr>
</table>

		e) The breaking load of armour joint shall not be less than 95% of that of armour wire / strip f) Zero negative tolerance for thickness of armour strip shall be as per IS:3975 g) Zinc rich paint shall be applied on strip/wire and its joint surface.
3.6	Outer Sheath	a) Extruded FRLS outer sheath of PVC (ST-2) shall be as per IS:5831 b) Colour : • For multi core cables-**Orange/Yellow as per tender requirement** • For single core cables **– Orange/Black as per tender requirement** c) FRLS Outer sheath of all the LT cables shall be UV resistant; as these cables are laid in air exposed to sun. Bidder to ensure the same for these requirements supported by required test. d) Shape of the cable over the outer sheath shall be circular, when manufactured/completed. e) The FRLS outer Sheath shall be embossed with following minimum text: i) The voltage designation ii) Type of construction /cable code (For e.g. A2XWY/A2XFY) iii) FRLS iv) Manufacture name/Trade mark v) Number of Cores and nominal cross section area of conductor vi) Name of buyer i.e BSES vii) Month & year of manufacturing viii) IS reference , i.e. IS:7098 ix) P.O No. and Date x) Font size shall be 5/5mm xi) ISI mark The embossing shall be progressive, automatic, in line and marking shall be legible and indelible. Following points shall be printed on every meter of cable i. Progressive (Sequential) length of cable at every meter, starting from zero for every drum. Colour filled in for the progressive marking, shall be with proper contrast in colouring. ii. Drum number marking on every meter of the cable length
3.7	Bending Radius	Bending Radius of cable shall comply to IS:1255
3.8	Sealing of cable end	Both ends of the cable shall be sealed by means of non-hygroscopic

		heat shrinkable PVC caps
3.9	FRLS Properties	Oxygen Index : Not less than 29% as per ASTM 2863
		Temperature Index : 250 Deg C at Oxygen Index 21 (when tested as per ASTM D 2863)
		Max Acid Gas Generation – Not more than 20% as per IEC -60754-1
		Light Transmission - Minimum 40% when tested as per ASTMD 2843 (Smoke Density rating shall be max 60%)
		Flammability Test – IEC 60332 part -1

4.0 CABLE DRUM

4.1	Reference Standard	Cable drum shall comply with IS: 10418.
4.2	Type of Drum	Wooden drums with anti termite treatment. (The drums shall be provided with M.S spindle plate and nut-bolts arrangement as per IS : 10418)
4.3	Drum Length & Tolerance	• For 2C X 10 mm^2 Cable - 1000+/-5% Mtr • For all Other cable sizes - 500 +/-5% Mtr
4.4	Overall Tolerance	-2 % for the total cable length for the entire order.
4.5	Short Length of Cable	a) Minimum acceptable length (Max. is 525 mtr) shall be 1 % of the total ordered qty. & no length shall be less than 250 mtr. Manufactures shall be taken prior approval from BSES Engineering for any short length supply. Short length will be accepted in last lot. b) Manufacture shall not be allowed to put two cable pieces of different short length in same cable drum
4.6	Preventive Measure for cable Drum	a) The surface of the drum and outer most cable layer shall be covered with water proof layer b) Ferrous part of wooden drum shall be treated with suitable rust preventive paint/coating to minimize rusting during storage.
4.7	Drum Identification Labels	a) Drum identification number b) Cable voltage grade c) Cable code (eg. A2XFY/A2XWY) d) Number of cores and cross sectional area e) Cable quantity i.e cable length (Meters) f) Purchase order number, date & SAP item code g) Total weight of cable and drum (kg) h) Manufacture's and Buyer's name i) Month & year of manufacturing j) Direction of rotation of drum; an arrow and suitable accompanying wording shall be marked on one end of the reel indicating the direction in which it should be rolled. k) Cable length final end-marking (i.e reading at the inner end

		and reading at the outer end, just before packing shall be marked on the drum.

5.0 PACKING, SHIPPING, HANDLING & STORAGE

5.1	Shipping information Plan	The seller shall be give complete shipping information concerning the weight ,size of each package
5.2	Transit Damage	The seller shall be held responsible for all transit damage due to improper packing/inside cable damaged found in store/site
5.3	Cable Drum Handling	The drum shall be with M.S spindle plate(with nut –bolts) of adequate size to suit the spindle rod , normally required for handling the drums , according to expected weight of the cable drums as per IS:10418

6.0 QUALITY ASSURANCE, TESTING& INSPECTION

All the tests shall be carried out in accordance with IEC / IS standards.

6.1	Quality Assurance Plan	In event of order manufacturer has to submit the signed copy of QAP.
6.2	Inspection hold points	AS per approved QAP (QAP shall be approved at the time of GTP approval)
6.3	Routine Test	a) Measurement of Electrical Resistance b) HV test with power frequency AC voltage
6.4	Type Test	**For bid participation–** (a) Bidder must be submitted cable type tested report from CPRI/ERDA/NABL approved lab for the type, size & rating of similar or higher sizes of offered cable along with bid. **After award of P.O.-** (b) If a bidder has valid type test report from CPRI/ERDA lab for the type, size & rating of similar or higher sizes of offered cable (including FRLS)—No need to conduct fresh type test from CPRI/ERDA lab. (c) If a bidder has valid type test report from CPRI/ERDA lab for the type, size & rating of similar or higher sizes of offered cable (except FRLS)—Need to conduct only fresh type test of FRLS properties test from CPRI/ERDA/NABL lab(list of tests mentioned in clause 3.9)without any commercial implication to BSES. (d) If a bidder has valid type test report from NABL lab for the type, size & rating of similar or higher sizes of offered cable (including FRLS)—Need to conduct complete type test (including FRLS properties) from CPRI/ERDA lab without any

		commercial implication to BSES. (Type test shall not be more than 5 years old. If the type test report is more than 5 years old (max 10 years), it can be considered subject to no change in their design) (e) UV resistance test to be carried out on one sample from CPRI/ERDA/NABL Accredited Lab as per ASTM standard (sample shall meet minimum 80% retention in tensile strength and elongation after exposure of 21 days as per ASTM standard).
6.5	Acceptance Test (Shall be conducted as per Cl.15.2 of IS 7098 Part-1 & IS 1554 part 1 for each lot of cable)	a) For cable sizes up to 25 mm^2 – one sample for chemical composition and purity test of aluminium shall be conducted per300km of ordered quantity and multiple thereof. b) For cable sizes 50mm^2 – one sample for chemical composition and purity test of aluminium shall be conducted per 100km of ordered quantity and multiple thereof. c) For cable sizes above 50 mm^2 – one sample for chemical composition and purity test of aluminium shall be conducted upto 50km of ordered quantity and multiple thereof. d) Chemical composition and purity test of aluminium shall be conducted from the lot offered to BSES on each size involved in the purchase order. Test shall be carried out at NABL accredited third party lab without any price implication to BSES. e) The sample will be selected either during acceptance test or after receipt of cable in BSES Stores.
6.6	Inspection	a) The buyer reserves the right to witness all tests specified on completed cables b) The buyer reserves the right to inspect cables at the seller's works at any time prior to dispatch either in finished form or during manufacturing, to prove compliance with the specifications. c) In-process and final inspection call intimation shall be given in 10 days advance to purchaser/CES.
6.7	Test Certificates	Complete test certificates (routine & acceptance tests) need to be submitted along with the delivery of cables.

7.0 DOCUMENT SUBMISSION MATRIX

Document/Drawing submission shall be as per the matrix given below:

a. All documents/drawings shall be provided in soft copy only via mail or in returnable Pen drives
b. Language of the documents shall be English only.
c. Document check sheet compliance shall be the first sheet for each submission stage i.e. Technical bid, Drawing Approval, Pre Dispatch, Pre closure

d. No submission is acceptable without check list compliance.
e. Deficient/ improper or incomplete document/ drawing submission shall be liable for rejection.
f. Order of documents shall be strictly as per the check list.
g. Any document not included in the below table but necessary for detailed engineering shall be deemed to be included in bidder's scope

S No.	Detail of Document	Bid	Approval	Pre Dispatch
1	Guaranteed Technical Particulars (GTP)	Required	Required	
2	Deviation Sheet, if any	Required	Required	
3	Detailed cross sectional drawing of cable	Required	Required	
4	Dimensional drawing of cable drum	Required	Required	
4	Type test reports of offered type and rating of cable	Required	Required	
5	BIS certificate	Required		
6	Complete cable catalogue	Required		
7	Make of Raw Materials	Required	Required	
8	Cable de-rating factors	Required	Required	
9	Armour coverage calculation		Required	
10	Inspection test reports and Routine Test Certificates carried out in manufacturer's works			Required
12	Test certificates of all raw materials			Required
13	Calibration test reports of instruments			Required

8.0 PROGRESS REPORTING

8.1	Outline Document	To be submitted for purchaser approval for outline of Production-inspection, testing-inspection, packing, dispatch, documentation programme.
8.2	Detailed Progress Report	To be submitted to purchaser once a month containing a) Progress on material procurement b) Progress on fabrication (As applicable) c) Progress on assembly (As applicable) d) Progress on internal stage inspection e) Reason for any delay in total programme f) Details of test failures if any in manufacturing stages. g) Progress on final box up constraints/forward path.

9.0 DEVIATION

a) Deviations from this specification shall be listed separately by bidder clause wise (format given below) along with optional offer and has to submit the list along with bid/quotation. BSES will review the deviations and if BSES is agreed with the deviation, seller has to take written confirmation from BSES on deviation during tender evaluation.
b) In the absence of any separate list of deviations from the bidders with bid as well as written confirmation from BSES on deviations, it will be assumed by the Buyer that the Seller complies with the Specification fully.
c) Any deviations mentioned in any other submitted bid documents (i.e.in filled GTP, Catalog, BSES old approval, buyer's/seller's standards etc) by seller without separate deviation sheets will not consider as a deviation from this tech spec at any stage of contract.

Deviation sheet format

Sl. No.	Document Name	Clause No.	Deviation	Reason	Merit to BSES

10.0 Annexure -A

GUARANTEED TECHNICAL PARTICULARS (Multi-core)

(Standard Cable sizes are 2cx10, 2cx25, 4cx25, 4cx50, 4C X 95, 4cx150, 4cx300, 4cx400)

For each size /rating separate GTP need to be furnished

Sr. No.	Description	Buyer's Requirement	Seller's data
	Manufacture Contact Person & Number		
	Purchase Req. No.	……..	
	Guarantee Period: (Min)	60 Months (from date of commissioning) / 66 months (from date of receipt at purchaser's store) whichever is earlier	
	Applicable IS / IEC Standard followed by vendor	As mentioned in the clause no – 2.0	
1	Make	…	
2	Type (as required by purchaser)		
A	For 2CX10Sqmm	A2XWY	
B	For Sizes above 10 mm^2	A2XFY	
3	Voltage Grade (kV)	1.1	
4	Maximum Conductor temperature		
A	Continuous	90°C	
B	Short time	250°C	
5	Conductor		
A	Material and Grade	As per Cl.3.1	
B	Make of Al	Ref Annexure D	
C	Size (mm^2)	…… mm^2	
D	Min no. of wires in each conductor (Nos.)	As per Manufacturer Standard	
E	Min Dia. of wires in each conductor before compaction (mm)	As per Manufacturer Standard	

Sr. No.	Description	Buyer's Requirement	Seller's data
F	Shape of Conductor	As per Cl.3.1 (e)	
G	Diameter over conductor (mm)	……	
H	Maximum Conductor resistance at 20 ° C(Ohm/Km)	As per Table 2 of IS 8130	
6	Insulation		
A	Insulation Material	As per Cl. 3.2	
B	Nominal thickness (mm)	As per Table 3 of IS 7098 Part-1	
C	Diameter over Insulation (mm) Approx.	……	
D	Make of insulation compound	Ref: Annexure D	
7	Inner Sheath		
A	Material and Type	As per Cl. 3.4	
B	Minimum thickness	As per Table 5 of IS 7098 Part-1	
C	Approx. dia. Over sheath (mm)	……	
8	Galvanized Steel Armour	as per purchaser's site - specific condition	
A	Material		
a)	For 2CX10 mm^2	G.I. Wire	
(i)	Wire Dia. (mm)	1.4+/-0.040	
(ii)	No. of wires	As per Manufacturer Standard	
b)	For sizes above 10 mm^2	G.I. Strip	
(i)	Strip size (Width and Thickness)	4x0.8 (Zero negative tolerance for thickness)	
(ii)	No. of Strips	As per Manufacturer Standard	
B	Area covered by Armour	Min 90% and calculations shall be strictly as per Annexure-D	
C	Dia. over Armour – Approx.(mm)	……	

Sr. No.	Description	Buyer's Requirement	Seller's data
9	Outer Sheath (FRLS)		
A	Material and Type	As per Cl. 3.6	
B	Minimum Thickness	As per Table 8 of IS 7098 Part-1	
C	Colour	Orange	
D	Embossing Details	As per Cl.3.6 (e)	
10	Approx. overall dia. (mm)	……	
11	Overall order tolerance	- 2 % for the total cable length for the entire order	
12	Cable Drum		
A	Type of Drum	Wooden	
B	Drum Length & tolerance	As per Spec. Cl. 4.3 & 4.4	
C	Marking on Drum	As per Spec. Cl. 4.7	
D	Drums provide with MS Spindle plate & nut bolts arrangement (as per IS:10418)	Required	
13	End Cap	Required	
14	Weights	……	
a)	Net Weight of cable (Kg/Km.) – Approx		
b)	Weight of empty drum	Kg	
c)	Weight of cable with drum	Kg	
15	Continuous current rating for standard I.S condition laid direct		
a)	In ground 30° C	Amps	
b)	In duct 30° C	Amps	
c)	In Air 40° C	Amps	
16	Short circuit current for 1 sec of Conductor (kAmp)	……	
17	Electrical Parameters at Maximum operating temperature:		
A	AC Resistance	Ohm/Km	

Sr. No.	Description	Buyer's Requirement	Seller's data
B	Reactance at 50 C/s	Ohm/Km	
C	Impedance	Ohm/Km	
D	Capacitance	Micro farad / Km	
18	Recommended minimum bending radius	..... x O/D	
19	De-rating factor for following Ambient temperature in	Ground / Air	
a)	At 30° C		
b)	At 35° C		
c)	At 40° C		
d)	At 45° C		
e)	At 50° C		
20	Group factor for following Nos. of cables laid	Touching / Trefoil	
a)	3 Nos.		
b)	4 Nos.		
c)	5 Nos.		
d)	6 Nos.		
21	Process of Cross linking of Polyethylene	Dry/ Sioplas Cure	
22	Type test	Is copy of latest valid TTR for respective Sizes enclosed? Yes /No	
23	FRLS Properties	As per IS 1554, Part-1	
	Oxygen Index	As per IS 1554, Part	
	Temperature Index	As per IS 1554, Part	
	Max Acid Gas Generation	As per IS 1554, Part	
	Light Transmission / Smoke Density	As per IS 1554, Part	

11.0 ANNEXTURE- B

GUARANTEED TECHNICAL PARTICULARS (Single Core)
(Separate GTP needs to be furnished for 25, 95, 300, 500, 630 & 1000 mm^2 cables)

S.No.	Description	Buyer's Requirement	Seller's data
	Manufacture Contact Person & Number		
	Purchase Req. No.	……..	
	Guarantee Period: (Min)	60 Months (from date of commissioning) / 66 months (from date of receipt at purchaser's store) whichever is earlier	
	Applicable IS / IEC Standard followed by Vendor	As mentioned in the clause no-2.0	
1	Make	……	
2	Type	A2XY (Un-armoured)	
3	Voltage Grade (kV)	1.1kV	
4	Maximum Conductor temperature		
A	Continuous	90°C	
B	Short time	250°C	
5	Conductor		
A	Material and Grade	As per Cl. 3.1	
B	Size (mm^2)	.....mm^2	
C	Min no. of wires in each conductor (Nos.)	As per Manufacturer Standard	
D	Min Dia. of wires in each conductor before compaction (mm)	As per Manufacturer Standard	
E	Shape of conductor	Compacted Circular	
F	Diameter over conductor (mm)	……	
G	Maximum Conductor resistance at 20 ° C(Ohm/Km)	As per Table 2 of IS 8130	
H	Make of Al	Ref Annexure D	
6	Insulation	As per Table 3 of IS7098 Part-1	
A	Insulation Material	As per Cl. 3.2	

S.No.	Description	Buyer's Requirement	Seller's data
B	Nominal thickness (mm)		
(i)	For 1Cx300 mm^2	1.8 mm	
(ii)	For 1Cx500 mm^2	2.2 mm	
(iii)	For 1Cx630 mm^2	2.4 mm	
iv)	For 1Cx1000 mm^2	2.8 mm	
C	Diameter over Insulation (mm) Approx.	……	
D	Make of insulation compound	Ref: Annexure D	
7	Inner Sheath	Not applicable	
8	Armour	Not applicable	
9	FRLS Outer Sheath		
A	Material and Type	As per Cl. 3.6	
B	Minimum Thickness	As per Table 8 of IS 7098 Part-1	
C	Colour	Orange	
D	Embossing Details	As per Cl.3.6 (e)	
10	Approx. overall dia. (mm)	……	
11	Overall order tolerance	-2 % for the total cable length for the entire order	
12	Cable Drum		
A	Type of Drum	Wooden	
B	Drum Length & tolerance	As per Spec. Cl. 4.3 & 4.4	
C	Marking on Drum	As per Spec. Cl. 4.7	
D	Drums provide with MS Spindle plate & nut bolts arrangement (as per IS:10418)	Required	
13	End Cap	Required	
14	Weights	……	
a)	Net Weight of cable (Kg/Km.) – Approx		
b)	Weight of empty drum	Kg	

S.No.	Description	Buyer's Requirement	Seller's data
c)	Weight of cable with drum	Kg	
15	Continuous current rating for standard I.S condition laid direct		
a)	In ground 30° C	Amps	
b)	In duct 30° C	Amps	
c)	In Air 40° C	Amps	
16	Short circuit current for 1 sec of Conductor (kAmp)	……	
17	Electrical Parameters at Maximum operating temperature:		
A	AC Resistance	Ohm/Km	
B	Reactance at 50 C/s	Ohm/Km	
C	Impedance	Ohm/Km	
D	Capacitance	Micro farad / Km	
18	Recommended minimum bending radius	……. x O/D	
19	Derating factor for following Ambient temperature in	Ground / Air	
a)	At 30° C		
b)	At 35° C		
c)	At 40° C		
d)	At 45° C		
e)	At 50° C		
20	Group factor for following Nos. of cables laid	Touching / Trefoil	
a)	3 Nos.		
b)	4 Nos.		
c)	5 Nos.		
d)	6 Nos.		
21	Process of Cross linking of Polyethylene	Dry/ Sioplas Cure	
22	Type test	Is copy of latest valid TTR for respective Sizes enclosed?	

S.No.	Description	Buyer's Requirement	Seller's data
		Yes /No	
23	FRLS Properties		
	Oxygen Index	As per IS 1554, Part	
	Temperature Index	As per IS 1554, Part	
	Max Acid Gas Generation	As per IS 1554, Part	
	Light Transmission / Smoke Density	As per IS 1554, Part	

12.0 ANNEXTURE – C

ARMOUR COVERAGE PERCENTAGE

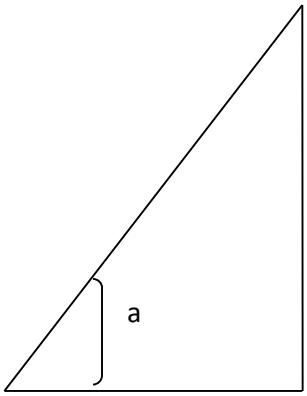

Percent coverage = $\frac{N \times d}{W} \times 100$

Where,
N = number of parallel wires / Strips
d = diameter of wire / width of formed wires
W = π x D x Cos a,
D = diameter under armour
a = angle between armouring wire / formed wires and axis of cable
tan a = π x D/C, and
C = lay length of armouring wires / formed wires.

Min 90% armour coverage shall be provided both in case of wires and strips.

The gap between armour wires / formed wires shall not exceed one armour wire / Formed wire space and there shall be no cross over / over-riding of armour wire / Formed wire so, the minimum area of coverage of armouring shall be 90%.

13.0 ANNEXTURE – D

LIST OF SUB-VENDORS

Sr. No.	Description of Material	Sub-Vendors
1	E.C Grade Aluminium Rod	Bharat Aluminium Co. Ltd. (BALCO) Hindustan Aluminium Co. Ltd. (HINDALCO) National Aluminium Co. Ltd. (NALCO)
2	XLPE Compound	Kkalpana Industries Ltd. KLJ Polymers and Chemicals Ltd. Dow Chemical, U.S.A Borealis, Sweden Hanwha, Seoul, South Korea
3	PVC Compound	Kkalpana Industries Ltd. KLJ Polymers and Chemicals Ltd. Universal SCJ Plastic Sriram Polytech Shri Ram Vinyl, Kota
4	GI Strip	Tata Balaji Systematic Mica Wires Pvt Ltd. Bansal Industries

BSES

TECHNICAL SPECIFICATION

FOR

FRLS CONTROL CABLE

SPECIFICATION NO. – BSES-TS-57-CCAB-R0

Rev:		0
Pages:		11
Date:		20 April 2022
Prepared by	Abhishek Vashistha	
	Rohit Patil	
Reviewed by	Puneet Duggal	
	Amit Tomar	
Approved by	Gaurav Sharma	
	Gopal Nariya	

INDEX

1.0 SCOPE 3

2.0 STANDARDS & CODES 3

3.0 SERVICE CONDITIONS 4

4.0 DESIGN FEATURES 4

5.0 QUALITY ASSURANCE PLAN, INSPECTION AND TESTING 6

6.0 PACKING, SHIPPING, HANDLING & SITE SUPPORT 7

7.0 DEVIATIONS 7

8.0 DOCUMENT SUBMISSION MATRIX 8

Annexure – A: Guaranteed Technical Particulars (Data by Supplier) 9

1.0 SCOPE

The scope of supply includes Design, Manufacture, Testing at manufacturer's works before dispatch, packing, delivery including unloading and stacking at site/store of Control Cable complete with all accessories.

2.0 STANDARDS & CODES

Materials, equipments and methods used in the manufacture of Cable shall conform to the latest edition of following:

S No.	STANDARD	DESCRIPTION
2.1	IS- 1554 Part-1	PVC insulated Cables
2.2	IS- 5831 : 1984	PVC insulation & sheath of electric cables.
2.3	IS- 10810 : 1984	Methods of test for cables.
2.4	IS- 8130 : 1984	Conductors for insulated electric cables and flexible cords.
2.5	IS- 3961 Part 2	Recommended current ratings for PVC insulated and PVC sheathed heavy duty Cables
2.6	IS- 3975 : 1999	Mild steel wires, formed wires and tapes for armouring of cables.
2.7	IS- 10418 : 1982	Drums for Electric Cables
2.8	IEC 60228 Ed.3.0 b	Conductors of insulated cables.
2.9	IEC 60332-3-21 Ed.1.0 b	Tests on electric cables under fire conditions. Part 3-21. Tests on bunched wires or cables.
2.10	IEC 60502-1 Ed. 2.1 b	Power cables with extruded insulation and their accessories for rated voltage from 1kV upto 30kV –Part 1: cables for rated voltages of 1kV and 3kV
2.11	IEC 60811	Common test methods for insulating and sheathing materials of electric cables.
2.12	IEC 60885 Ed.1.0 b	Electric test methods for electric cables.
2.13	IEC 60227	PVC insulated cables of rated voltages up to and including 450/750 V.
2.14	IEC 60028 Ed. 2.0 b	International Standard of Resistance for Copper
2.15	ASTMD 2843	Standard Test Method for density of Smoke from the burning or decomposition of cables
2.16	ASTM 2863	Standard Test Method for measuring of minimum oxygen concentration
2.17	IEC 60754-1	Test on gases evolved during combustion of materials for cables. Part 1 – Determination of the Halogen Acid gas Content

3.0 SERVICE CONDITIONS

Control Cables to be supplied against this specification shall be suitable for satisfactory operation under the following conditions-

3.1	Average grade atmosphere	Heavily polluted, Dry
3.2	Maximum altitude above sea level	1000M
3.3	Relative Humidity	100%
3.4	Ambient air temperature	Highest 50 Deg C Average 40 Deg C Minimum 0 Deg C
3.5	Operating temperature	0 Deg C - 50 Deg C
3.6	Rainfall	750mm concentrated in four months

4.0 DESIGN FEATURES

(Refer Annexure – "A")

S No.	Parameters	Technical Requirements
4.1	Cable construction Features	Size & dimensions of each item mentioned under this clause shall be followed as detailed out in GTP, refer Annexure A
4.2	Conductor	• Stranded, plain copper, circular • Shall be made from high conductivity copper rods
4.3	Insulation	Extruded PVC Insulation Type A as per IS 5831
4.4	Core Identification	As per IS 1554 Part 1
4.5	Inner Sheath	Extruded Inner Sheath of Black PVC type ST-2 as per IS 5831
4.6	Armour	• As per Clause 13.2 of IS 1554 Part-1: Galvanized steel round wire armour. • Minimum area of coverage of armouring shall be not less than 90 %. (refer Annex C of IS 1554-part 1 for % calculation)

S No.	Parameters	Technical Requirements
4.7	Outer Sheath	a) Extruded outer sheath of PVC type ST-2 as per IS 5831 having FRLS properties b) Color : Black c) The Outer Sheath shall be embossed with: i. The voltage designation ii. Type of construction / cable code (for e.g. AYWY) iii. Manufacturers Name or Trade mark iv. Number of Cores and nominal cross sectional area of conductors v. The drum progressive length of cable and individual drum number at every meter. (By Printing) vi. Name of buyer i.e. BSES vii. Month & Year of Manufacturing viii. P.O. No. and P.O. Date
4.8	FRLS Properties	a) Oxygen Index : Not less than 29% as per ASTM 2863 b) Temperature Index: 250°C at Oxygen Index 21 (when tested as per ASTM D 2863) c) Max Acid Gas Generation – Not more than 20% as per IEC -60754-1 d) Light Transmission - Minimum 40% when tested as per ASTMD 2843 (Smoke Density rating shall be max 60%) e) Flammability Test – As per IEC 60332-III, Cat – B, IEC 60332- I, IS- 10810 – Part 53, IS:10810 – Part 61 & 62 (Category A)
4.9	Sealing of cable end	Both ends of the cable shall be sealed with PVC Cap.
4.10	Drum length & tolerance	500 mtr (+/- 5%)
4.11	Overall tolerance in cable length	- 2 %
4.12	Short length of cables	a) Minimum acceptable short length shall be above 100 meters. Manufacturer shall be required to take prior approval from engineering for any short length supply. b) Manufacturer shall not be allowed to put two cable pieces of different short lengths in same cable drum. c) Only 1% of the total ordered quantity.

5.0 QUALITY ASSURANCE PLAN, INSPECTION AND TESTING

S No.	Parameters	Technical Requirements
5.1	Quality Assurance Plan	QAP Shall be submitted by vendor for approval. Inspection and testing of the material shall be carried out accordingly.
5.2	Type test	Cables must be of type tested as per relevant IS/IEC/ASTM. Type test conducted either from CPRI/ERDA/NABL third party accredited lab will be treated as valid. Type test reports shall be submitted for the type, size & rating of cable offered along with bid.
5.3	Routine test	Each drum length of cable shall be subjected to the routine tests as mentioned in IS 1554 part -1
5.4	Acceptance Tests	The sampling & acceptance tests Shall be conducted, as per IS 1554 Part-1 and approved QA plan, for each lot of cable during the inspection of lot at manufacturer's works.
5.5	Inspection	a) The buyer reserves the right to inspect cables at the Seller's works at any time prior dispatch, to verify compliance with the specifications. b) In-process and final inspection call intimation shall be given in 15 days advance to purchaser. c) In the event of any discrepancy in the test reports i.e. test reports not acceptable or any type tests (including special /additional tests, if any) not carried out, same shall be carried out without any cost implication to BSES before dispatch of cable.
5.6	Test certificates	Test certificates (routine and acceptance) shall be submitted along with the dispatch documents.

6.0 PACKING, SHIPPING, HANDLING & SITE SUPPORT

6.1	Packing	The cable shall be wound on wooden drums (with anti termite treatment and M.S. spindle plate with nut-bolts). Cable should be packed conforming to Indian / international standards. The drum shall be fully enclosed by suitable packing preferably PP sheeting.
6.2	Drum identification label	The following information shall be marked on the drum: a) Drum identification number b) Trade name or trade mark; if any c) Name of manufacturer d) Name of buyer i.e. BSES e) Cable voltage grade f) Cable code (e.g. YWY) g) Number of cores and cross sectional area h) Purchase order number with SAP item code i) Year and month of manufacturing j) Direction of rotation of drum (an arrow) k) Net weight of cable in drum and gross weight of cable with drum l) Batch no or Lot no. m) Cable length initial reading & end reading shall be marked on drum. Cable starting end shall be taken out from winding to read this drum reading with proper sealing to protect against external damage.
6.3	Shipping	The seller shall give complete shipping information concerning the gross weight, size of each packing.
6.4	Handling & Storage	Manufacturer instruction shall be followed. Detail handling & storage instruction sheet/manual needs to be furnished before commencement of supply.
6.5	Transit damage	The seller shall be responsible for any transit damage due to improper packing.

7.0 DEVIATIONS

7.1	Deviation	Deviations from this Specification shall be stated in writing with the tender by reference to the Specification clause/GTP/Drawing and a description of the alternative offer. In absence of such a statement, it will be assumed that the bidder complies fully with this specification.

8.0 DOCUMENT SUBMISSION MATRIX

Document/Drawing submission shall be as per the matrix given below. All documents/drawings shall be provided in soft copy only in returnable Pen drives. Language of the documents shall be English only. Incomplete submission shall be liable for rejection.

S No.	Description	Bid	Approval	Pre Dispatch
8.1	Guaranteed Technical Particulars (GTP)	required	required	
8.2	Deviation Sheet, if any	required	required	
8.3	Detailed cross sectional drawing of cable	required	required	
8.4	Dimensional drawing of Cable Drum		required	
8.5	Type test reports for the offered type and rating of cable	required	required	
8.6	BIS Certificate	required		
8.7	Make of Raw Materials	required	required	
8.8	Cable de-rating factors	required	required	
8.9	Manufacturer's Quality Assurance Plan		required	
8.10	Detailed installation & commissioning instructions		required	
8.11	Test certificates of all raw materials			required
8.12	Inspection and routine test reports, carried out in manufacturer's works			required

Annexure – A: Guaranteed Technical Particulars (Data by Supplier)

(Standard Cable sizes are 2Cx2.5, 4Cx2.5, 6C X 2.5, 8Cx2.5, 10Cx2.5, 12C X 2.5 mm^2)

For each size separate GTP need to be furnished

***For any size other than standard sizes mentioned, GTP should be as per IS or requirement whichever applicable**

Sr.	Description	Buyer's requirement	Vendor's Data
	Purchase Req. No.	….	
	Guarantee Period: 5 Years	60/66 Months	
1.0	Make	To be specified by vendor	
2.0	Type (AS PER IS 1554 part -1)	YWY	
3.0	Voltage Grade (KV)	1.1	
4.0	Maximum Conductor temperature		
a)	Continuous (° C)	70°C	
b)	Short time (° C)	160°C	
5.0	Conductor		
a)	Size (mm^2)	2.5	
b)	No. of wires in each conductor	As per Manufacturer standard	
c)	Dia. of wires in each conductor before compaction (mm)	As per Manufacturer standard	
d)	Shape of Conductor	As per Clause 4.2 of specification	
e)	Diameter over conductor mm	To be specified by vendor	
f)	Maximum Conductor resistance at 20 ° C (Ohm/Km)	As per Table 2 of IS 8130	
6.0	Insulation	As per Table 1 of IS:5831 – 1984	
a)	Nominal thickness (mm)	As per Clause 4.3 of specification & Table 2 of IS 1554(Part-1)	
b)	Minimum thickness (mm)		
c)	Core Identification	As per IS 1554 Part 1	
d)	Approx. dia. over Insulation (mm)	To be specified by	

Sr.	Description	Buyer's requirement	Vendor's Data
		vendor	
7.0	Inner Sheath	As per Table 2 of IS:5831 – 1984	
a)	Minimum thickness (mm)	As per Table 4 of IS 1554(Part-1)	
b)	Approx. dia. Over sheath (mm)	To be specified by vendor	
8.0	Galvanized Steel Armour	As per IS 1554-part 1	
a)	Number of armour wire	As per Manufacturer Std.	
b)	Nominal dia. of Round Wire	As per Table 5 of IS 1554(Part-1)	
c)	Dia. over armour – approx.	To be specified by vendor	
d)	Lay Ratio	To be specified by vendor	
e)	Confirm minimum 90% coverage (submit calculation)		
9.0	Outer Sheath (FRLS)	As per Table 2 of IS:5831 – 1984	
a)	Thickness (min)	As per Table 7 of IS 1554(Part-1)	
b)	Color	Black	
10.0	Approx. overall dia. (mm)	To be specified by vendor	
11.0	Drum length & tolerance	As per clause 4.10 of specification	
12.0	End Cap	Required	
13.0	Drums provide with MS Spindle plate & Nut bolts arrangement	Required	
14.0	Net Weight of cable (Kg/Km.) – approx.	To be specified by vendor	

Sr.	Description	Buyer's requirement	Vendor's Data
15.0	Continuous current rating for standard I.S. condition laid Direct		
a)	In ground 30° C Amps	To be specified by vendor	
b)	In duct 30° C Amps	To be specified by vendor	
c)	In Air 40° C Amps	To be specified by vendor	
16.0	Short circuit current for 1 sec of conductor. (KAmp)	To be specified by vendor	
17.0	Electrical Parameters at Maximum Operating temperature:		
a)	Resistance (Ohm/Km) (AC Resistance)	To be specified by vendor	
b)	Reactance at 50 C/s (Ohm/Km)	To be specified by vendor	
c)	Impedance (Ohm/Km)	To be specified by vendor	
d)	Capacitance (Micro farad / KM)	To be specified by vendor	
18.0	Recommended minimum bending radius	…. x O/D	
19.0	FRLS Properties		
a)	Oxygen Index	To be specified by vendor	
b)	Temperature Index	To be specified by vendor	
c)	Max Acid Gas Generation	To be specified by vendor	
d)	Light Transmission / Smoke Density	To be specified by vendor	

BSES

Technical Specification

of

Illumination and Lighting System

Specification no – BSES-TS-98-ILS-R1

Rev		1
Page		1 of 12
Date		24 July 2024
Prepared by	Supriya Raina	
Reviewed by	Uttam Shukla	
Approved by	Deepti Sharma	

INDEX

1. SCOPE 3
2. STANDARDS AND CODES 3
3. ILLUMINATION SYSTEM 4
4. DISTRIBUTION PILLARS FOR NORMAL ILLUMINATION SYSTEM 6
5. LIGHTING DISTRIBUTION BOARDS 7
6. MAIN EMERGENCY LIGHTING BOARD 8
7. LUMINAIRES 9
8. JUNCTION BOXES/WALL BOXES 10
9. AUTOMATIC LIGHTING CONTROLLER 10
10. SOCKETS & SWITCHES 10
11. NAMEPLATE & MARKING 11
12. APPROVED MAKE OF COMPONENTS 11
13. INSPECTION & TESTING 12
14. DEVIATION 12

1. SCOPE

The specification covers the design, engineering, manufacture, assembly and testing at manufacturer's work, supply and installation of Illumination system for substation including normal distribution pillars, normal lighting board, emergency distribution pillar, emergency lighting board, Junction boxes, Illumination lamps with required lux level.

2. STANDARDS AND CODES

Standard Code	Standard Description
IS 16101 : 2012	General Lighting -LEDs and LED modules – Terms and Definitions
IS16102(Part 1) 2012	Self-Ballasted LED Lamps for General Lighting Services, Part 1 Safety Requirements
IS16102(Part 2) 2012	Self-Ballasted LED Lamps for General Lighting Services, Part 2 Performance Requirements
IS16103(Part 1) 2012	Led Modules for General Lighting, Part 1Safety Requirements
IS16103(Part 2) 2012	Led Modules for General Lighting, Part 2 Performance Requirements
IS15885(Part2/Sec13)	Safety of Lamp Control Gear , Part 2 Particular Requirements , Section 13 dc. or ac. Supplied Electronic Control gear for Led Modules
IS16104 : 2012	d.c. or a.c. Supplied Electronic Control Gear for LED Modules - Performance Requirements
IS16105 : 2012	Method of Measurement of Lumen Maintenance of Solid State Light (LED) Sources
IS16106 : 2012	Method of Electrical and Photometric Measurements of Solid-State Lighting (LED) Products
IS 16107(Part 1)2012	Luminaires Performance ,Part 1 General Requirements
IS 16107(Part 2)2012	Luminaires Performance, Part 2 Particular Requirements ,Section 1 LED Luminaire
IS 16108 : 2012	Photo biological Safety of Lamps and Lamp Systems
IS 10322 : 2012	Luminaires: Part 5 Particular requirements, Section 3 Luminaires for road and street lighting
IS 5	Colours for Ready Mixed Paints and Enamels
IS 613	Copper Rods and Bars for electrical purposes
IS 694	PVC Insulated cables for working voltages up to and including 1100 V
IS 2551	Danger notice plates
IS 5082	Wrought Aluminium and Aluminium alloy bars, rods, tubes and sections for electrical purpose
IS 6665	Code of practice for industrial lighting
IS 13703	LV Fuses for voltage not exceeding 1000V ac or 1500V dc
IS 10118	Code of Practice for Selection, Installation and Maintenance of Switchgear and Controlgear

International Standard	
IEC 62612	Self-ballasted LED lamps for general lighting services for voltage above 50 V — Performance requirements
IEC : 60598-2-3	Particular requirements - Luminaries for road and street lighting
IEC 62471	Photo biological safety of lamps and lamp systems
IEC 62778	Application of IEC 62471 for the assessment of blue light hazard to light sources and luminaries
IEC 61000-4-5	Electromagnetic compatibility (EMC) - Part 4-5: Testing and measurement techniques - Surge immunity test
IEC 60439	Low Voltage Switchgear and Controlgear assemblies - Type tested and partially type tested assemblies
IEC 60529	Degrees of protection provided by enclosures (IP Code)
IEC 60947-1	Low Voltage Switchgear and Controlgear - General Rules
IEC 60947-2	Low Voltage Switchgear and Controlgear - Circuit breakers
IEC 61643	Low-voltage surge protective devices

3. ILLUMINATION SYSTEM

3.1.	Lux level requirement	3.1.1. The design of the illumination system shall ensure availability of the minimum illumination levels as specified below with the maximum possible uniformity in the entire substation. The illumination system shall consist of the normal lighting system and emergency lighting system. The minimum illumination levels at workplane i.e at height of 0.00 mtr. shall be as specified below(Reference IS3646(Part II)). 3.1.1.1. Roads within substation : 20 lux 3.1.1.2. Boundary wall of the substation : 10 lux 3.1.1.3. Control room : 300 lux 3.1.1.4. Switchgear Room : 200 lux 3.1.1.5. Battery room : 100 lux 3.1.1.6. Stair case : 100 lux 3.1.1.7. Power Transformers : 100 lux 3.1.1.8. Cable cellar/ Indoor trench : 70 lux 3.1.1.9. Outdoor switchyard : 70 lux 3.1.1.10. APFC/ station trafo : 70 lux 3.1.1.11. Terrace : 20 lux 3.1.2. Contractor shall design the lighting system with the help of desired software. Owner shall verify the same post commissioning with lux meter to check the levels. In case desired lux levels are not met contractor has to install addition fitting in outdoor and indoor location as per requirement. 3.1.3. Complete design calculation sheets for arriving at the number of luminaires required for the normal and emergency requirements shall be furnished by the bidder. Design calculation sheets for the selection of cables, MCB, HRC fuses, bus bars, etc. are also required to be furnished for Owner's approval.

3.2.	Illumination circuit	3.2.1.	The illumination system load and welding load in the substation area shall be supplied from 415/230 volt ACDBs to be provided in the substation control room. Requisite numbers of 3-phase, 4-wire, cable circuits for illumination system and welding socket outlets shall be extended from the above board. The laying of cables from the Board to the illumination system/welding socket outlets and their installation are included in the Bidder's scope.
		3.2.2.	Each outgoing cable circuit for illumination loads from the 415 volt switchboard shall terminate in the respective outdoor pillar boxes located in the substation. Outgoing feeders from the illumination shall be taken to the various illumination points in the substation. Necessary fuses shall be provided near light fixtures in the substation.
		3.2.3.	The emergency illumination load shall be supplied from the main emergency illumination board located in the control room. Necessary cable circuits with appropriate fuses shall be provided by the Contractor for the supply system for emergency illumination load of the substation.
		3.2.4.	Emergency DC lighting system shall be provided in the substation wherever required. The emergency lighting shall be adequate for safe movement by the operating personnel in the substation in the event of failure of normal lighting system. Number of lights shall be decided at the time of detailed engineering. A total of minimum 12 no's individually controllable 18 watt LEDs shall be provided in the substation.
		3.2.5.	6 Nos. welding sockets to be provided, 4 Nos. in Outdoor Yard & 2 Nos. in Control room building.
		3.2.6.	Illumination to be provided inside the Indoor trenches as per required lux level.
		3.2.7.	At terrace, the lights shall be installed on Mumty external wall. No lighting pole is recommended.
3.3.	Wiring	3.3.1.	All lighting fixtures and 5A convenience outlets shall be wired with 1.1 KV grade PVC insulated extra flexible, multistranded, copper conductor cables of size not less than 2.5 sq.mm.
		3.3.2.	For 15A heavy-duty outlets copper conductor cables of size not less than 6 sq. mm shall be used.
		3.3.3.	The wiring shall consist of phase, neutral and ground. For grounding the lighting fixtures/convenience outlets etc. Green CU wire of size 2.5 sqmm shall be used. The phase and neutral conductor shall be suitably colour coded. For DC black & white wires to be used.
		3.3.4.	Supply shall be looped between the lighting fixtures of the same circuit by using junction boxes. For this purpose one (1) 100 mm x 100 mm square junction box shall be provided for each lighting fixture. For recessed lighting fixtures, supply shall be extended from the junction boxes to the fixtures by means of flexible conduits. The conduits shall be of HMS (High mechanical stress) type and of

		minimum dia 25 MM. While for stem-mounted/wall-mounted lighting fixtures the junction box shall be mounted below one of the mounting stems. 3.3.5. For lighting branch circuits the nos. of lighting switches shall be decided keeping in mind the ease of control, as well as to limit the current to 2.5A per circuit. 3.3.6. For convenience outlets, the bidder shall design the wiring scheme so as to limit 6 nos. of 5A outlets per branch circuit and two nos. of 15A outlets per branch circuit. 3.3.7. All wiring materials such as terminals, crimping lugs, ferrules etc. shall also be provided by the Contractor. 3.3.8. No section of the conduit shall be filled with more than 70% of its area. Any consumable material that is required for pulling the wires through conduit shall also be provided by the Contractor. 3.3.9. Lighting fixtures coming in one area shall be evenly distributed between three phases so that tripping of one phase or two phases does not cause total loss of illumination in that area.
3.4.	Required documents to be submitted	Complete manufacturer's literature/catalogues, performance curves, illumination distribution curves, G.A. drawings, specification sheets, etc. as relevant in respect of all materials/equipment to be supplied shall be submitted by the Contractor.
3.5.	Illumination system check after installation	After completion of installation of the illumination system in the substation, the actual illumination level at different locations shall be measured by the Contractor in the presence of Owner's authorised representative. If the average value of the measured illumination levels is found to fall short of the specified levels, the Contractor shall have to provide additional lighting fixtures so as to achieve the specified levels of illumination at no additional cost to the Owner. While measuring the illumination levels due allowance shall be made on account of maintenance factor. The specified lux levels shall be suitably increased to cover maintenance factor of 0.6 for outdoor areas.

4. DISTRIBUTION PILLARS FOR NORMAL ILLUMINATION SYSTEM

4.1.	Construction	4.1.1. Distribution pillars of adequate dimensions shall be constructed from sheet steel having a thickness not less than 2 mm. 4.1.2. The pillars shall be totally enclosed weather-proof, dustproof, vermin-proof, having hinged doors with locking arrangement and shall be capable of being mounted in the substation. 4.1.3. The pillars suitable for cable entry at the bottom shall be designed for easy access of connections to terminals and inspection of equipment mounted therein. 4.1.4. The degree of protection of the board shall be IP55. 4.1.5. The enclosure shall be painted externally with Shade No., 692 of IS:5 and internally with brilliant white of semi-glossy

		finish of IS:5. 4.1.6. Location of LDB, ELDB & PDB to be finalized during detailed engineering.
4.2.	Configuration	4.2.1. Each pillar shall accommodate the following: 4.2.2. One incoming, 4-pole (3 phase and neutral) isolating switch with MCB of appropriate current rating. 4.2.3. 3-phase and neutral bus bars of appropriate current rating. 4.2.4. Single-pole earth leakage circuit breakers of suitable current ratings on all outgoing circuits. 4.2.5. Neutral links for all outgoing circuits. 4.2.6. Cable lugs, compression type cable glands, name plates, circuit numbers, earthing lugs, etc. to make the pillar complete in all respects. 4.2.7. 20% spare outlets shall be provided for outgoing feeders. 4.2.8. Three (3) indicating lamps with fuses to indicate that supply is 'ON'.

5. LIGHTING DISTRIBUTION BOARDS

5.1.	Construction	5.1.1. Metal-clad enclosure with minimum 2 mm CRCA sheets for load-bearing members and 1.6 mm for non load-bearing members suitably reinforced with structural. 5.1.2. 3-phase, 4-wire bus bar system with high conductivity aluminium busbars mounting on FRP insulators having anti-tractive property with minimum 25 mm phase-to-phase and minimum 19 mm phase-to-earth clearances. The busbars shall be uniform throughout the length of the LDB and busbar joints shall be silver plated and covered with shrouds. 5.1.3. All cables shall enter from the bottom. 5.1.4. The degree of protection for the LDB shall be IP-54. 5.1.5. The enclosure shall be painted externally with Shade No., 692 of IS:5 and internally with brilliant white of semi-glossy finish of IS:5.
5.2.	Configuration	Each LDB shall accommodate the following: 5.2.1. One incoming, 4-pole (3 phase and neutral) isolating switch with MCB of appropriate current rating. 5.2.2. 3-phase and neutral bus bars of appropriate current rating. 5.2.3. 4 Pole outgoing MCBs of appropriate rating 5.2.4. Cable lugs, compression type cable glands, name plates, circuit numbers, earthing lugs, etc. to make the pillar complete in all respects. 5.2.5. 20% spare outlets shall be provided for outgoing feeders. 5.2.6. Three (3) Nos. indication lamps (Red, Yellow, Blue) shall be provided to indicate that the incoming supply is available. Similarly, 3 Nos. indication lamps shall be provided to indicate that the busbar is energised.

5.3.	Busbar	5.3.1. The busbars shall be suitable for short-time current rating of 40KA for 1 Sec. 5.3.2. The busbar temperature rise shall not exceed 35 Deg C over an ambient of 50 Deg C. 5.3.3. The LDBs shall be provided with a continuous busbar of 25 x 6 sq.mm (electrolytic copper) with suitable hardware for connection to the main grounding grid

6. MAIN EMERGENCY LIGHTING BOARD

6.1.	Construction	6.1.1. Metal-clad enclosure with minimum 2 mm CRCA sheets for load-bearing members and 1.6 mm for non load-bearing members suitably reinforced with structural. 6.1.2. All cables shall enter from the bottom. 6.1.3. The degree of protection for the LDB shall be IP-54. 6.1.4. The enclosure shall be painted externally with Shade No., 692 to IS:5 and internally with brilliant white of semi-glossy finish to IS:5.
6.2.	Configuration	6.2.1. Each Board shall accommodate the followings: 6.2.2. Automatic changeover contactor. 6.2.3. Voltage sensing relays. 6.2.4. Time delay relay. 6.2.5. Bus Bars. 6.2.6. Two pole MCBs of adequate ratings for incoming and outgoing feeders. 6.2.7. Test switch, push button type. 6.2.8. Indicating lamps, ac - Green, dc - Red. 6.2.9. Terminals for remote indication 6.2.10. Cable lugs, compression type cable glands, name-plates, circuit numbers, earthing lugs and remote indication wiring upto substation 415V a.c. control board, to make the board complete in all respects.
6.3.	Changeover facility	The main emergency lighting board shall have an automatic changeover switch to energise the dc lighting system in the event of AC power failure. It shall have voltage-sensing relays to perform the changeover automatically when AC voltage of any one phase falls below 60 percent of 240 volts and continues at that low level for more than 10 seconds. These shall changeover from DC to AC again when 70 percent of 240 volt is restored and this continues for 10 seconds.
6.4.	Emergency Lighting Pillar	Local Emergency Lighting Pillar shall be identical in details to Lighting Distribution Pillar specified in clause 4 except that it shall have two pole isolating switch fuse unit on the incoming side and only two busbars and shall be without neutral links.

7. LUMINAIRES

7.1.	Luminaires type	Luminaires for use in normal and emergency illumination systems in the substation shall be suitable for LED lamps. All the luminaires shall be supplied complete with all accessories and lamps. The LED lamps ratings shall be adequate to achieve the required Lux level and calculation for number of luminaires shall be in the bidder's scope.
7.2.	Flood lights	The flood light luminaires in the substation shall be fixed at suitable height on the substation structures/ building, so as to provide the specified minimum illumination in the substation area without causing any glare to the operational/ maintenance staff working in the substation. While fixing the luminaires it shall be ensured that the stipulated electrical clearances are not violated. The Contractor shall supply and install suitable type of non-mettalic street light poles or octagonal galvanished poles required for installing the fittings for illuminating the roads, fence boundary wall etc.
7.3.	Reliability	Substation lighting circuits shall be divided into two or three sections and provided with time switches of suitable ratings.
7.4.	Design features for Outdoor Luminaires	
7.5.	Fixture	7.5.1. The luminaries housing shall be either extruded or pressure die casted aluminium of minimum 1.6 mm thickness. Body must be Corrosion Resistant Powder Coated and UV resistant. 7.5.2. The entire housing shall be dust and waterproof having Ingress protection of housing as IP65 or above as per IEC 60529. 7.5.3. Luminaire should be covered with suitable Glass or diffuser with high Transitivity. All luminaires shall be supplied with either clear toughened glass or clear polycarbonate cover for better IP retention and higher life. 7.5.4. Timers for Outdoor luminaries shall be in Scope of Vendor.
7.6.	LED	7.6.1. The luminous efficacy of LED luminaire shall be at least 85 lumen/watt. 7.6.2. LED module efficacy shall not be less than 90 percent of the rated LED module Efficacy. 7.6.3. Color Rendering Index (CRI) shall be at least 70 7.6.4. Color Temperature shall be 5500-6500K 7.6.5. Uniformity Emin/Eavg> 0.4, Emin/Emax>0.33
7.7.	LED Driver	LED driver shall have following features: 7.7.1. LED driver shall be applicable for Power supply 240V AC±10%, at 50Hz+3% / -5%. 7.7.2. Output voltage of the driver shall bedesigned to meet the Power Requirementsof the system.

		7.7.3. Power factorofcompletefitting shall bemorethan 0.90atfull load. 7.7.4. Total Harmonic Distortion (THD) shall be< 10 %
7.8.	General Requirements	7.8.1. The connecting wires used inside the Luminaire, shall be low smoke halogen free, fire retardant e-beam cable and fuse protection shall be provided in input side. 7.8.2. The lumen maintenance of a11 the LED fixtures shall not be less than70% after 50,000 hours. 7.8.3. Built in protection features for Short circuit, Surges (at least upto 5kV), and overvoltage shall be provided. 7.8.4. High /Low voltage cut-off shall be provided. 7.8.5. The whole luminaire shall be eco-friendly green technology based i.e. mercury free. 7.8.6. No UV and IR radiations shall be produced. 7.8.7. Access of driver for maintenance shall be provided at the top/side of the luminaire fixture. 7.8.8. All fasteners must be of stainless steel.

8. JUNCTION BOXES/WALL BOXES

8.1.	Size	100 mm x 100 mm junction boxes and wall boxes of standard size shall be provided.
8.2.	Construction	Wall boxes and junction boxes shall be made of FRP with a thickness of 2.0mm. Necessary conduit termination fittings such as bushings, locknuts etc. also be provided.

9. AUTOMATIC LIGHTING CONTROLLER

9.1.	Size	Contractor shall provide microprocessor based automatic lighting controller for controlling switching arrangement of indoor and outdoor lighting. The controller shall have provision of setting 52 week ON / OFF time as per astronomical clock or as per user requirement. All abnormal events shall be recorded in the controller. Secure / Genus or equivalent are approved makes.

10. SOCKETS & SWITCHES

10.1.	Indoor	All sockets and switches shall be modular and universal type suitable for 5/15A
10.2.	Outdoor	Two nos transformer oil filtration sockets shall be provided, one at each transformer bay. These sockets shall be three phase industrial type and rated for 100A.

11. NAMEPLATE & MARKING

11.1.	Name plate details of LED housing	Followings shall be clearly engraved/embossed on the die cast housing of LED: Rated voltage or voltage range (marked 'V' or 'Volt'); 11.1.1. Rated current (marked A' or 'Ampere'); 11.1.2. Rated wattage (marked 'W' or 'Watts'); 11.1.3. Rated frequency (marked in 'Hz') 11.1.4. Rated lumen 11.1.5. Indian/International Standards to which it is manufactured 11.1.6. Month and year manufacture 11.1.7. Customer Name - BSES Yamuna / Rajdhani Power Ltd 11.1.8. Fitting serial number 11.1.9. PO no and date 11.1.10. Guarantee period
11.2.	Panel nameplate and marking details	
11.2.1.	Panel nameplate	Panel shall have a nameplate clearly indicating the following: 11.2.1.1. Panel Serial No.- 11.2.1.2. Customer Name - BSES Yamuna/ Rajdhani Power Ltd 11.2.1.3. PO No. & date - 11.2.1.4. Panel Name - 11.2.1.5. Current rating - 11.2.1.6. Guarantee period -
11.2.2.	Feeder nameplate	Large and bold name plate carrying the feeder identification shall be provided on the top of each module.
11.2.3.	Danger plate	Panel shall have a danger plate of anodized Aluminium clearly indicating the danger logo and voltage details.
11.2.4.	Material	Anodized Aluminium 16SWG. Nameplates shall be satin silver in colour with black letters engraved on them. Stickers are not allowed.
11.2.5.	Fixing	All nameplates shall be riveted to the panels at all four corners. Bolting/screwing is not acceptable.

12. APPROVED MAKE OF COMPONENTS

12.1.	Relays	ABB/Jyoti/Omran
12.2.	HRC Fuse Links	GE/ Siemens/ L&T
12.3.	AC Contractors/ DC contactor	L&T/Siemens/Telemechanique/GE/ABB

12.4.	Terminals	Connectwell/Elmex/Wago/Phoenix
12.5.	Push buttons / Actuator	L&T/Siemens/Vaishno/Schneider
12.6.	MCB	Legrand/Hager/Schneider/ABB
12.7.	LED	NICHIA/ OSRAM/ CREE/ PHILIPS//EDISON
12.8.	Luminaire fittings	GE/Philips/Crompton/Bajaj
12.9.	Indicating lamps	Vaishno/Binay/Teknic/Siemens/Mimic/C&S

13. INSPECTION & TESTING

13.1.	Type test	All Equipment should be of type tested quality only, type test certificate to be submitted along with offer. If the manufacturer's lab is accredited by govt. / authorized body then it shall be acceptable for type testing.
13.2.	Acceptance & Routine tests	As per relevant Indian standard

14. DEVIATION

14.1.	Deviation	Deviations from this Specification shall be stated in writing with the tender by reference to the Specification clause/GTP/Drawing and a description of the alternative offer. In absence of such a statement, it will be assumed that the bidder complies fully with this specification. No deviation will be acceptable post order.

BSES

Technical Specification

Of

HT Indoor Switchgear (33 & 11 kV)

Specification no – BSES-TS-66-HTSWG-R0

Rev:		0
Date:		22 Jun 2022
Prepared by	Abhishek Harsh	
	Hemanshi Kaul	
Reviewed by	Srinivas Gopu	
	Abhinav Srivastava	
Approved by	Gaurav Sharma	
	Gopal Nariya	

INDEX

1 SCOPE OF SUPPLY 3
2 CODES & STANDARDS 3
3 SERVICE CONDITION 4
4 PANEL CONSTRUCTION 4
5 CIRCUIT BREAKER 6
6 FUNCTIONAL REQUIREMENTS 7
7 SURGE SUPPRESSOR 10
8 CURRENT TRANSFORMER 10
9 POTENTIAL TRANSFORMER 10
10 FEEDER AND BUS EARTHING 10
11 EQUIPMENT EARTHING 11
12 METERS 11
13 INDICATION, ALARMS & ANNUNCIATION 12
14 SELECTOR SWITCHES & PUSH BUTTONS 14
15 INTERNAL WIRING 14
16 TERMINAL BLOCKS 15
17 RELAYS 16
18 SYNCH CHECK PHILOSOPHY 28
19 ETHERNET SWITCHES & FIBRE OPTICS 29
20 SPACE HEATERS 30
21 SOCKETS, SWITCHES ,ILLUMINATION LAMPS & MCBs 30
22 NAMEPLATES AND MARKING 31
23 SURFACE TREATMENT & PAINTING 32
24 APPROVED MAKES OF COMPONENTS 32
25 INSPECTION , TESTING & QUALITY ASSURANCE 33
26 PACKING 34
27 SHIPPING 35
28 HANDLING AND STORAGE 35
29 DEVIATION 35
30 ACCESSORIES & TOOLS 36
31 DRAWINGS & DATA SUBMISSION MATRIX 36
ANNEXURE – A - SCOPE OF SUPPLY 39
ANNEXURE – B – TRANSFORMER MONITORING CUM AVR RELAY 40
ANNEXURE – C - TECHNICAL PARTICULARS 43
ANNEXURE – D - GUARANTEED TECHNICAL PARTICULARS (DATA BY BIDDER) 47
ANNEXURE – E – SPARES REQUIREMENT 48
ANNEXURE – F – SLDs 48

DocUUID : 23f7dc1d-9724-406f-b48e-bdff68bb2c4f

1 SCOPE OF SUPPLY

a. This specification covers the design, manufacture, testing, supply, erection & commissioning of 33kV and 11kV, Air Insulated, metal-enclosed and factory assembled switchgear.

b. This specification shall be used in conjunction with all specifications, switchgear data sheets, single line diagrams, and other drawings attached to the specification / purchase requisition.

2 CODES & STANDARDS

Materials, equipment and methods used in the manufacture of switchboards shall conform to the latest edition of following

2.1	Indian Electricity Rules 1956	Latest edition
2.2	Indian Electricity act 1910	Latest edition
2.3	Switchgear and control gear	IEC : 60694, IEC: 60298, IEC : 62271-200, IEC : 60529, IS: 3427, IS: 12729, IS: 12063, IS: 13947, IS: 9046
2.4	Circuit breaker	IEC 62271 - 100, IS 13118, IS 2516
2.5	Isolators & earthing switches	IEC 62271 - 102
2.6	Current transformers	IS:2705, IEC:60185
2.7	Voltage transformer	IS:3156, IEC:60186,
2.8	Indicating Instruments	IS:1248
2.9	Energy meters	IS 13010
2.10	Relays	IS:8686, IS:3231, IS:3842
2.11	Control switches and push buttons	IS 6875
2.12	HV fuses	IS 9385
2.13	Arrangement of Switchgear bus bars, main connections and auxiliary wiring	IS:375
2.14	Code of practice for phosphating iron & steel	IS 6005
2.15	Colours for ready mixed paints	IS 5
2.16	Code of practice for installation and maintenance of switchgear	IS 3072

DocUUID : 23f7dc1d-9724-406f-b48e-bdff68bb2c4f

3 SERVICE CONDITION

3.1	Max Ambient Temperature	50 deg C
3.2	Max Daily average ambient temp	40 deg C
3.3	Min Ambient Temp	0 deg C
3.4	Maximum Humidity	95%
3.5	Minimum Humidity	10%
3.6	Maximum annual rainfall	750 mm
3.7	Average no of rainy days per annum	60
3.8	Rainy months	June to Oct
3.9	Altitude above MSL	300 M
3.10	Seismic Zone	IV

4 PANEL CONSTRUCTION

4.1	Enclosure Type	Free standing, Indoor, Fully compartmentalised, Metal clad, Vermin proof
4.2	Enclosure degree of protection	IP 4X for high voltage compartment IP 5X for low voltage compartment
4.3	Enclosure material	Pre-Galvanized CRCA steel
4.3.1	Load bearing members	2.5 mm thick
4.3.2	Doors and covers	2.0 mm thick
4.3.3	Gland plate	3.0 mm MS for multicore and 5. 0 mm Aluminium for single core cables. All gland plates should be detachable type with gasket
4.4	Dimension of Panel	Maximum 2700mm, Operating height maximum 1600mm. In case of Extension of Existing make panels, vendor shall match the dimension of existing panel.
4.5	Extensibility	On either side
4.6	Separate Compartments for	Bus bar, Circuit Breaker, HV incoming cable, HV outgoing cable, PT, LV instruments & relays
4.7	Transparent inspection window	For cable compartment at height of cable termination.
4.8	Bus end cable box	For direct cable feeder from bus
4.9	Rear Doors	Rear doors shall not be interlocked i.e. all door opening shall be independent to each other.

DocUUID : 23f7dc1d-9724-406f-b48e-bdff68bb2c4f

4.10	Breaker compartment door	Separate, with lockable handle (Design with breaker trolley as the front cover is not acceptable). Door of one panel should not cause hindrance for opening of adjacent panel.
4.11	Inter compartmental connections	
4.11.1	Breaker to bus bar compartment	Through seal-off bushings
4.11.2	Breaker to cable compartment	Through seal-off bushings
4.12	Nut Bolt	Shall be as less as possible for ease of opening of compartments
4.13	Pressure relief devices	To be provided for each HV compartment
4.14	Bus support insulator	Non-hygroscopic, track-resistant, high strength, Epoxy insulators (Calculation for validating dynamic force withstand capability to be submitted during detailed engineering)
4.15	Fixing arrangement	Doors - Concealed hinged, door greater than 500mm shall have minimum three sets of hinges Covers - SS bolts Gasket - Neoprene
4.16	Required HV cable termination height in the cable compartment	650 mm for 11 KV. 1000mm for 33 KV
4.17	Panel Base Frame	Steel Base frame as per manufacturer's standard.
4.18	Handle	Removable bolted covers with handle for cable chamber and busbar chamber. Panel no./identification to be provided on cable box cover also.

DocUUID : 23f7dc1d-9724-406f-b48e-bdff68bb2c4f

4.19	APFC	a. Controlling of Capacitor Banks' switching shall be done by APFC. Although APFC shall not be in bidder's scope, Space for cut out shall be provided in the Capacitor panel. Space requirement-150X150 mm^2 b. Wiring of Bus PT , Incomer CT and Capacitor CT upto spare terminal for APFC shall also be provided in Capacitor Panel
4.20	Technical particulars	As per Annexure –C

5 CIRCUIT BREAKER

5.1	Type	Truck or cassette type
5.2	Mounting	On withdrawable truck or carriage, with locking facility in service position.
5.3	Switching duty	c. Transformer (oil filled and dry type) d. Motor (of small and large ratings – DOL starting with starting current 6 to 8 times the full load current & with a maximum of 3 starts per hour) e. Underground cable with length up to 10 km
5.4	Interrupting medium	Vacuum
5.5	Contact	Tulip contact shall be provided without any gap between contacts
5.6	Breaker operation	Three separate identical single pole units operated through the common shaft
5.7	Operating Mechanism	Re-strike free, Trip free, with electrical anti-pumping feature
5.7.1	Type	Motor wound, spring charged, stored energy type with manual charging facility
5.7.2	Operation on supply failure	One O-C-O operation possible after failure of power supply to the spring charging motor
5.8	Breaker indications & push buttons	

DocUUID : 23f7dc1d-9724-406f-b48e-bdff68bb2c4f

5.8.1	ON/ OFF / Emergency trip push button	a. Manual / mechanical. b. Emergency Off push button should be provided with a protective flap. c. Mechanical ON shall have padlocking facility.
5.8.2	Mechanical ON – OFF indication	On breaker trolley front
5.8.3	Operation counter	On breaker trolley front
5.8.4	Test-service position indicator	On breaker trolley front
5.8.5	Mechanism charge / discharge indicator	On breaker trolley front
5.9	Breaker positions	Service, Test and Isolated
5.10	Inter changeability	Possible, only with breaker of same rating
5.11	Breaker Control	On panel front only
5.12	Handle	Breaker shall be provided with handles for easy handling, rack in–out operation and manual spring charging as applicable.
5.13	Pin Sequence and Configuration of Pin of Adaptor Plug	(a) Pin sequence and No of Pins of Adaptor plug shall be same in Outgoing and Capacitor Panel (b) Pin sequence and No of Pins of Adaptor plug shall be same in Incoming and Bus Coupler Panel
5.14	Technical particulars	As per Annexure-C

6 FUNCTIONAL REQUIREMENTS

6.1	Interlocks	
6.1.1	Breaker compartment door opening	Opening of door and rack out to test/isolated position should be possible with breaker in OFF position only.
6.1.2	Breaker compartment door closing	Should be possible even when breaker is in isolated position
6.1.3	Racking mechanism safety interlock	Mechanical type
6.1.4	Racking in or out of breaker inhibited	When the breaker is closed

DocUUID : 23f7dc1d-9724-406f-b48e-bdff68bb2c4f

6.1.5	Racking in the circuit breaker inhibited	Unless the control plug is fully engaged
6.1.6	Disconnection of the control plug inhibited	As long as the breaker is in service position
6.1.7	Opening of cable compartment cover of Incomer Panels inhibited	As long as cable end is alive
6.2	Safety Devices	
6.2.1	Exposure to live parts	In case the breaker panel door is required to be opened during a contingency, the personnel should not be exposed to any live part. Suitable shrouds/barriers/insulating sleeves should be provided.
6.2.2	Breaker handing	In case the breaker is mounted on a carriage which does not naturally roll out on the floor, a trolley for handling the breaker is to be provided.
6.3	Operation of breaker	In either service or test position
6.3.1	Closing from local	Only when local/remote selector switch is in local position
6.3.2	Closing from remote	Only when local/remote selector switch is in remote position
6.3.3	Tripping from local	Only when local/remote selector switch is in local position
6.3.4	Tripping from remote	Only when local/remote selector switch is in remote position
6.3.5	Tripping from protective relays	Irrespective of position of local/remote switch
6.3.6	Testing of breaker	In test or isolated position keeping control plug connected
6.4	Safety shutters.	

DocUUID : 23f7dc1d-9724-406f-b48e-bdff68bb2c4f

6.4.1	Automatic safety shutter for female primary disconnects	To fully cover contacts when breaker is withdrawn to test. Independent operating mechanism for bus bar & cable side shutters, separately pad-lockable in closed position.
6.4.2	Label for identification	For Bus side and cable side shutters
6.4.3	Warning label on shutters of incoming and other connections	Clearly visible label "Isolate elsewhere before earthing" be provided
6.5	Breaker electrical operation features	
6.5.1	Trip circuit supervision	To be given for breaker close & open condition
6.5.2	Trip circuit supervision relay contact	For indication, alarm & to inhibit closing of breaker
6.5.3	Emergency trip push button contact	Wired directly to trip coil (wired to Master trip relay if second trip coil provided)
6.5.4	Emergency trip push button contact	Wired to inhibit closing of breaker
6.5.5	Master trip relay contact (if given)	Wired to inhibit closing of breaker
6.5.6	Tripping or opening of breaker through relay but not routed through Lockout (Example- SCADA Opening, Undervoltage, Overvoltage)	Wired to Contact multiplication Relay and then from CMR to tripping of breaker
6.5.7	Closing of breaker through relay	Wired to Contact multiplication Relay and then from CMR to closing of breaker
6.6	DC control supply bus in all panels	Fed by two DC incoming sources in Bus coupler panel with auto changeover facility
6.7	PT supply bus in all panels	Fed normally by bus PT with automatic changeover facility to incomer line PT
6.8	Flaps for Internal Arc Protection	Flaps shall not have any pores/ opening during normal operation

DocUUID : 23f7dc1d-9724-406f-b48e-bdff68bb2c4f

7 SURGE SUPPRESSOR

7.1	Provision	To be provided in all panels except bus coupler and BPT.
7.2	Type	Gapless, metal oxide type
7.3	Technical particulars	As per Annexure -C

8 CURRENT TRANSFORMER

8.1	Type	Shall be cast resin type with insulation class of E or better.
8.2	Rating and technical particulars	As per Annexure – C (Technical particulars) and Annexure – F (SLDs)
8.3	CBCT	If specified, bidder shall clearly mention his proposal for mounting the same.

9 POTENTIAL TRANSFORMER

9.1	Type	Shall be cast resin type with insulation class of E or better.
9.2	Rating and technical particulars	As per Annexure – C (Technical particulars) and Annexure – F (SLDs)
9.3	Mounting	It shall be mounted on a withdrawable carriage. Mounting of PT on the breaker truck is not acceptable. Mounting of PT on the panel top is also not acceptable. Primary PT fuse shall be easily accessible.
9.4	Neutral	The HV neutral connection to earth shall be easily accessible for disconnection during HV test.

10 FEEDER AND BUS EARTHING

10.1	Earthing arrangement	Through separate earthing truck for bus & feeder
10.2	Short time withstand capacity of earthing truck	Equal to rating of breaker. Refer technical parameters.
10.3	Operation from front	Mechanically operated by separate switch.

DocUUID : 23f7dc1d-9724-406f-b48e-bdff68bb2c4f

10.4	Interlocks and Alarm	To prevent inadvertent closing on live circuit, with padlocking arrangement to lock truck in close or open position.

11 EQUIPMENT EARTHING

11.1	Material of earthing bus	Aluminium
11.2	Earthing Bus Position	It shall run through whole switchgear passing nearer to Power Cable Position
11.3	Earth bus joints	All bolted joints in the bus should be made by connection of two bolts.
11.4	Rating	Sized for rated short circuit current for 3 seconds
11.5	Enclosure & non -current carrying part of the switchboard / components	Effectively bonded to the earth bus.
11.6	Hinged doors	Earthed through flexible copper braid
11.7	Circuit breaker frame /carriage	Earthed before the main circuit breaker contacts/ control circuit contacts are plugged in the associated stationary contacts
11.8	Metallic cases of relays, instruments and other LT panel mounted equipment	Connected to the earth bus by independent copper wires of size not less than 2.5 sq. mm with green colour insulation. For this purpose LT compartment should have a clear designated earth bus to which earth connections from all components are to be connected.
11.9	CT and PT neutral	Earthed at one place at the terminal blocks through links.

12 METERS

12.1	Mounting	Flush mounted
12.2	Multifunction Meter	
12.2.1	SCADA Interfacing	RS485 rear port suitable for integration on Modbus Protocol
12.2.2	Size	96x96 mm^2

DocUUID : 23f7dc1d-9724-406f-b48e-bdff68bb2c4f

12.2.3	Panels where to be provided	All panels except Bus PT Panel
12.2.4	Accuracy Class	0.2
12.2.5	Signal List	R-Ph Current, Y-Ph Current, B-Ph Current, Neutral Current, R-Y Ph Voltage, Y-B Ph Voltage, B-R Ph Voltage, Active Power, Active Energy, Reactive Power, Power Factor, Max Demand, Phase angle 1, Phase angle 2, Phase angle 3, THD Mean Current, THD Mean Voltage
12.2.6	Data Type	MFI
12.2.7	Compatibility with RTU	ABB 560
12.2.8	Programmability	CT secondary shall be programmable i.e for both 1 A and 5 A
12.2.9	Auxiliary Supply	a. 48 – 240VDC and AC i.e universal type. b. Although in Scheme, MFM must be wired up with DC only
12.3	Voltmeter	Digital type with programmable ratio
12.3.1	Size	96x96 mm^2
12.3.2	Panels where to be provided	Incomer and bus PT panel
12.3.3	Voltmeter switch	Inbuilt in meter
12.3.4	Accuracy Class	1.0
12.4	Energy meter provision	Energy meter is not in supplier's scope. Only space and CT/PT wiring is to be provided in all panels except bus coupler and bus PT. Space for Energy meter shall be 200(w) X 350(h) mm^2

13 INDICATION, ALARMS & ANNUNCIATION

13.1	Indications	Flush mounted, High intensity, clustered LED type
13.1.1	Breaker ON	Red
13.1.2	Breaker Off	Green
13.1.3	Spring Charged	Blue
13.1.4	DC control supply fail	Amber
13.1.5	AC control supply fail	Amber
13.1.6	Auto trip	Amber
13.1.7	Test Position	White
13.1.8	Service Position	White

DocUUID : 23f7dc1d-9724-406f-b48e-bdff68bb2c4f

13.1.9	Heater circuit healthy	Yellow (Indication with integrated push button for checking)
13.1.10	Trip circuit healthy	White
13.1.11	PT supply as applicable	R,Y B
13.2	Annunciator (For 33kV Panels only)	
13.2.1	Type	Static type alongwith alarm. Annunciations shall be repetitive type and shall be capable of registering the fleeting signal. Fascia test facility should also be provided.
13.2.2	Note	LED type indications may not be provided for alarm signals provided on annunciator.
13.2.3	Mounting	Flush mounted
13.2.4	Fascia	12 window
13.2.5	Signals to provided on Fascia	Window 1 – Main Protection Operated (Distance /Differential) Window 2 – Backup O/C & E/F Protection Operated Window 3 – LBB operated Window 4 – CB Autotrip Window 5 – Trip Circuit Unhealthy Window 6 – DC Fail Window 7 – AC Fail Window 8 – VT Fuse Fail Window 9 – Protection Relay Faulty
13.2.6	Push Buttons	For test, accept and reset
13.2.7	Potential Free Contacts	To be provided for event logger
13.3	Alarm scheme with isolation switch	a. For DC fail, TC fail and CB auto trip in 11kV panels b. For all signals wired to annunciator in 33kV panels

DocUUID : 23f7dc1d-9724-406f-b48e-bdff68bb2c4f

Sequence of operation of the annunciator shall be as follows-

S No.	Alarm Condition	Fault Contact	Visual Annunciation	Audible Annunciation
a.	Normal	Open	Off	Off
b.	Abnormal	Close	Flashing	On
c.	Accept	Close	Steady on	Off
d.	Return to normal	Open	Steady On	Off
e.	Reset	Open	Off	Off
f.	Reset before return to normal	Close	Flashing	On

14 SELECTOR SWITCHES & PUSH BUTTONS

14.1	Selector switches	Flush mounted on LV compartment door, with shrouded terminals
14.1.1	TNC switch with pistol grip	Lockable, spring return to normal position
14.1.2	Local / SCADA selector switch	2 pole Lockable Switch
14.1.3	Rotary ON/OFF switches	For heater / illumination circuit
14.1.4	Rating	16 A
14.2	Push Button	Flush mounted on LV compartment door, with shrouded terminals
14.2.1	Emergency trip push button	Red color with stay put
14.2.2	Accept push buttons	Black color – Trip alarm / DC fail alarm
14.2.3	Reset push buttons	Yellow color – Trip alarm / DC fail alarm
14.2.4	Rating	10 A

15 INTERNAL WIRING

15.1	Internal wiring	1100 V grade, PVC insulated (FRLS) stranded flexible copper wire.
15.2	Size	2.5 sq mm for CT circuit, 1.5 sq mm for PT & control circuits
15.3	Colour code	
15.3.1	CT & PT	R Ph – Red Y Ph – Yellow B Ph – Blue Neutral – Black

DocUUID : 23f7dc1d-9724-406f-b48e-bdff68bb2c4f

15.3.2	Others	DC– grey, AC-black, Earth – green
15.4	Ferrules	At both ends of wire
15.5	Ferrule type	Interlocked type (one additional red colour ferrule for all wires in trip circuit)
15.6	Lugs	Tinned copper, pre-insulated, ring type, fork type and pin type as applicable. CT circuits should use ring type lugs only.
15.7	Spare contacts	Spare contacts of relays and contactors etc. should be wired upto the terminal block.
15.8	Wiring enclosure	Plastic channels, Inter panel wiring through PVC sleeves
15.9	Interpanel wiring	Wires with ferrule to be terminated in the adjacent shipping section should be supplied with one end terminated and the other end bunched and coiled.
15.10	Auxiliary supply	Auxiliary bus wiring for AC and DC supplies, voltage transformer circuits, annunciation circuits and other common services shall be provided on the same set of terminals in all the panels with proper segregation.

16 TERMINAL BLOCKS

16.1	Rating and Type	1100 V grade, moulded piece, stud type screw driver operated terminals complete with insulated barriers, washers, nuts and lock nuts.
16.2	Segregation	TBs shall be segregated.
16.3	Suitability	Terminal Block shall be Stud Type Screw Driver Operated suitable for 6sqmm control cable. Disconnecting facility shall be provided in CT and PT terminal. Shorting and Earthing facility shall be provided in CT
16.4	Marking and covers	White fibre markings strip with clear plastic, slip-on / clip-on terminal covers to be provided.
16.5	Disconnecting Facility	To be provided in CT and PT terminals

DocUUID : 23f7dc1d-9724-406f-b48e-bdff68bb2c4f

16.6	Shorting & Earthing Facility	To be provided in CT Terminals
16.7	Spare Terminals	20% in each TB row
16.8	Spare Terminal Block in Capacitor Bank Panel	Separate Terminal Block with 50 number terminals required (20 Numbers Disconnecting and 30 Number Non Disconnecting type)
16.9	TB shrouds & separators	Moulded non- inflammable plastic material
16.10	Clearance between 2 sets of TB	100 mm min
16.11	Clearance with cable gland plate	250 mm min
16.12	Clearance between AC / DC set of TB	100 mm min
16.13	Test terminal blocks	Screw driver operated stud type for metering circuit

17 RELAYS

17.1	Protection Relays – General Features	
17.1.1	Technology and Functionality	Numerical , microprocessor based with provision for multifunction protection, control, metering and monitoring
17.1.2	Mounting	Flush Mounting, IP5X
17.1.3	Architecture	Hardware and software architecture shall be modular and disconnectable to adapt the protection and control unit to the required level of complexity as per the application.
17.1.4	Programming and configuration	Relay shall utilize a user friendly setting and operating multi-lingual software in windows environment with menus and icons for fast access to the data required. Programming software and communication cord for offered relays should be included in scope of supply.
17.1.5	Conformal Coating	a. Required on all cards and Components to protect against moisture, dust, chemicals, temperature extremes etc b. Testing shall be as per IEC 60068-2-60

DocUUID : 23f7dc1d-9724-406f-b48e-bdff68bb2c4f

17.1.6	SCADA Interface port	LC type Dual fibre optic port for interfacing with SCADA on IEC 61850 & PRP compatible. Through this port relays shall be connected to Ethernet switches..
17.1.7	Processing Indications	SCADA functions for monitoring shall be executed on SPI (Single Point Input) and DPI (Double Point Input). DPI shall only be used in case of Isolator and Circuit breaker “close” and “open” indication.
17.1.8	Command Processing	Functionality of command processing offered for SCADA interface shall include the processing of single and double commands i.e SCO (Single Command Output) and DCO (Double object command Output). DCO shall only be used in case of Isolator and Circuit Breaker “close” and “open” command.
17.1.9	PC Interface port	Front port (preferably serial) for configuration/data downloads using PC. Cost of licensed software and communication cord, required for programming of offered protection relays shall be included in the cost of switchgear.
17.1.10	User Interface	An alphanumeric key pad and graphical LCD display with backlight indicating measurement values and operating messages. It should be possible to access and change all settings and parameters without the use of PC.
17.1.11	SCADA Interface	Relay shall communicate all measured & monitored parameters, analog signals, event record, fault record, DIs , DOs etc to SCADA
17.1.12	Relay Characteristics	Relay shall integrate all necessary protections for different applications in accordance with IS and IEC. Relay shall provide wide setting ranges and choice of all IEC, IEEE and other tripping curves through a

DocUUID : 23f7dc1d-9724-406f-b48e-bdff68bb2c4f

		minimum of two setting groups.
17.1.13	GOOSE Messaging	Relays shall communicate all status signals, commands and events on GOOSE messaging.
17.1.14	Event and Fault records	Relay shall have the facility of recording of various parameters during event/fault with option to set the duration of record through settable pre fault and post fault time. Relay shall store records for last 10 events and 10 faults (minimum). It should be possible to download records locally to PC and remotely to SCADA.
17.1.15	Self diagnosis	Relay shall be able to detect internal failures. A watchdog relay with changeover contact shall provide information about the failure.
17.1.16	Time synchronization	All relays shall be capable of being synchronized with the system clock using SCADA interface and PC.
17.1.17	Operation Indicators	LEDs with push button for resetting.
17.1.18	Test Facility	Inbuilt with necessary test plugs.
17.2	Protection Relays for 11kV Incomer panel	
17.2.1	Relay 1	3-phase Directional Overcurrent and Earthfault protection with IDMT, Definite time and instantaneous characteristics
		Undervoltage and overvoltage protection
		Trip Circuit Supervision
		Sync Check function
		PT supervision (fuse failure monitoring)
		Relay shall communicate all measured and monitored parameters like current, voltage, active power, reactive power, apparent power, power factor, phase angle, event record, fault record, DIs ,

DocUUID : 23f7dc1d-9724-406f-b48e-bdff68bb2c4f

		DOs etc to SCADA
17.2.2	Relay 2	Auto Re-closer (If Specified in Tender document)
		High Impedance Restricted Earth fault protection.
17.2.3	User Configurable DIs and Dos	Relay-1 & 2 should have a total of 16 Dis and 10 Dos (minimum). Each relay should have atleast 2 Dis and 4 Dos
17.2.4	Note	Combining functions of Relay-1 and Relay-2 in single relay is not acceptable.
17.2.5	SLD	Refer annexure – F1
17.3	Protection Relays for 11kV Bus Section panel	
17.3.1	Relay 1	3-phase Overcurrent and Earthfault protection with IDMT, Definite time and instantaneous characteristics
		Sync Check function
		Trip Circuit Supervision
		PT supervision (fuse failure monitoring)
		User Configurable 16 Dis and 8 Dos (minimum)
		Relay shall communicate all measured and monitored parameters like current, voltage, active power, reactive power, apparent power, power factor, phase angle, event record, fault record, DIs , DOs etc to SCADA
		Auto Re-closer (If Specified in Tender document)
17.3.2	SLD	Refer annexure – F2
17.4	Protection Relays for 11kV Outgoing panel	
17.4.1	Relay 1	3-phase Overcurrent and Earthfault protection with IDMT, Definite time and instantaneous characteristics
		Trip Circuit Supervision
		User Configurable 12 Dis and 6 Dos (minimum)
		Relay shall communicate all measured and monitored parameters like current, voltage, active

DocUUID : 23f7dc1d-9724-406f-b48e-bdff68bb2c4f

		power, reactive power, apparent power, power factor, phase angle, event record, fault record, DIs , DOs etc to SCADA
		Auto Re-closer (If Specified in Tender document)
17.4.2	SLD	Refer annexure – F3
17.5	Protection Relays for 11kV Station Transformer panel	
17.5.1	Relay 1	3-phase Overcurrent and Earthfault protection with IDMT, Definite time and instantaneous characteristics
		Trip Circuit Supervision
		User Configurable 12 DIs and 6 DOs (minimum)
		Relay shall communicate all measured and monitored parameters like current, voltage, active power, reactive power, apparent power, power factor, phase angle, event record, fault record, DIs , DOs etc to SCADA
		Auto Re-closer (If Specified in Tender document)
17.5.2	SLD	Refer annexure – F4
17.6	Protection Relays for 11kV Capacitor panel	
17.6.1	Relay 1	3-phase Overcurrent and Earthfault protection with IDMT, Definite time and instantaneous characteristics
		Undervoltage and Overvoltage protection(From Bus PT)
		Trip Circuit Supervision
		Neutral Unbalance protection(From RVT associated to Cap Bank)
		Timer for on time delay (minimum 600 seconds)
		User Configurable 12 DIs and 6 DOs (minimum)
		Relay shall communicate all measured and monitored parameters like current, voltage, active power, reactive power, apparent power, power

DocUUID : 23f7dc1d-9724-406f-b48e-bdff68bb2c4f

		factor, phase angle, event record, fault record, DIs , DOs etc to SCADA
		Auto Re-closer (If Specified in Tender document)
17.6.2	SLD	Refer annexure – F5.
17.7	Protection Relays for 33kV Incomer	
17.7.1	Relay 1	Line differential protection (Dual channel, ST Port Compatible for Single Mode Fibre having wavelength 1310 nm)
		Distance Protection
		Software based CT ratio correction
		Dedicated port for communication with remote end relay through optical fibre. This port should be in addition to PC interface and SCADA interface ports.
17.7.2	Relay 2	Bay control unit having MIMIC with 3-phase Directional Overcurrent and Earthfault protection with IDMT, Definite time and instantaneous characteristics.
		Trip Circuit Supervision
		Sync check function
		Under Frequency, Over Frequency, Rate of Change of Frequency
		Circuit Breaker failure protection
		Reverse blocking function
		PT supervision
		Relay shall communicate all measured and monitored parameters like current, voltage, active power, reactive power, apparent power, power factor, phase angle, event record, fault record, DIs , DOs etc to SCADA
		Auto Re-closer (If Specified in Tender document)
17.7.3	User Configurable DIs and Dos	Relay-1 & 2 should have a total of 16 DIs and 12 DOs (minimum). Each relay should have atleast 2 DIs and 6 Dos

DocUUID : 23f7dc1d-9724-406f-b48e-bdff68bb2c4f

17.7.4	Note	Combining functions of Relay-1 and Relay-2 in single relay is not acceptable.
17.7.5	SLD	Refer annexure – F6
17.8	Protection Relays for 33kV Transformer Feeder Panel	
17.8.1	Relay 1	Biased differential protection
		REF protection
		Software based ratio and vector correction feature (without ICT)
		H2 and H5 harmonic restraint
17.8.2	Relay 2	Bay control unit having MIMIC with 3-phase Overcurrent and Earthfault protection with IDMT, Definite time and instantaneous characteristics
		Trip Circuit Supervision
		Under Frequency, Over Frequency, Rate of Change of Frequency
		Reverse Blocking function
		Circuit Breaker failure protection
		Relay shall communicate all measured and monitored parameters like current, voltage, active power, reactive power, apparent power, power factor, phase angle, event record, fault record, DIs , DOs etc to SCADA
		Auto Re-closer (If Specified in Tender document)
17.8.3	User Configurable DIs and DOs	Relay-1 & 2 should have a total of 16 DIs and 12 DOs (minimum). Each relay should have atleast 2 DIs and 6 DOs.
17.8.4	Note	Combining functions of Relay-1 and Relay-2 in single relay is not acceptable.
17.8.5	SLD	Refer annexure – F7
17.9	Protection Relays for 33kV Buscoupler Panel	
17.9.1	Relay 1	Bay control unit having MIMIC with 3-phase Overcurrent and earthfault protection with IDMT,

DocUUID : 23f7dc1d-9724-406f-b48e-bdff68bb2c4f

		Definite time and instantaneous characteristics.
		Trip Circuit Supervision
		Sync check function
		Reverse Blocking Function
		Circuit Breaker failure protection
		PT supervision (fuse failure monitoring) for Bus PT-1
		User Configurable 16 DIs and 8 DOs (minimum)
		Relay shall communicate all measured and monitored parameters like current, voltage, active power, reactive power, apparent power, power factor, phase angle, event record, fault record, DIs , DOs etc to SCADA
17.9.2	Relay 2	Under Frequency, Over Frequency, Rate of Change of Frequency
		PT supervision (fuse failure monitoring) for Bus PT-2
		Auto Re-closer (If Specified in Tender document)
17.9.3	SLD	Refer annexure – F8
17.10	Protection Relays for 33kV Outgoing Panel (For Installation at KCC Consumer Premises)	
17.10.1	Relay 1	Bay control unit having MIMIC with 3-phase Overcurrent and Earthfault protection with IDMT, Definite time and instantaneous characteristics
		Trip Circuit Supervision
		Reverse Blocking Function
		Under Frequency, Over Frequency, Rate of Change of Frequency
		Circuit Breaker failure protection
		User Configurable 12 DIs and 6 DOs (minimum)
		Relay shall communicate all measured and monitored parameters like current, voltage, active power, reactive power, apparent power, power

DocUUID : 23f7dc1d-9724-406f-b48e-bdff68bb2c4f

		factor, phase angle, event record, fault record, DIs , DOs etc to SCADA
		Auto Re-closer (If Specified in Tender document)
17.10.2	SLD	Refer annexure – F9
17.11	Protection Relays for 33kV Incomer from 66/33kV Autotransformer	
17.11.1	Relay 1	High Impedance Restricted Earth fault protection
17.11.2	Relay 2	Bay control unit having MIMIC with 3-phase Overcurrent and Earthfault protection with IDMT, Definite time and instantaneous characteristics
		Trip Circuit Supervision
		Under Frequency, Over Frequency, Rate of Change of Frequency
		Reverse Blocking Function
		Sync check function
		Undervoltage and overvoltage protection
		Circuit Breaker failure protection
		PT supervision (fuse failure monitoring)
		Relay shall communicate all measured and monitored parameters like current, voltage, active power, reactive power, apparent power, power factor, phase angle, event record, fault record, DIs , DOs etc to SCADA
		Auto Re-closer (If Specified in Tender document)
17.11.3	User Configurable DIs and DOs	Relay-1 & 2 should have a total of 16 DIs and 12 DOs (minimum). Each relay should have atleast 2 DIs and 6 Dos
17.11.4	Note	Combining functions of Relay-1 and Relay-2 in single relay is not acceptable
17.11.5	SLD	Refer annexure – F10
17.12	Protection Relays for 33kV Outgoing from 66/33kV Autotransformer	
17.12.1		Power swing blocking
	Relay 1	Line differential protection(Dual channel, ST Port

DocUUID : 23f7dc1d-9724-406f-b48e-bdff68bb2c4f

		Compatible for Single Mode Fibre having wavelength 1310 nm)
		Distance Protection
		Software based CT ratio correction
		Dedicated port for communication with remote end relay through optical fibre. This port should be in addition to PC interface and SCADA interface ports.
17.12.2	Relay 2	Bay control unit having MIMIC with 3-phase Overcurrent and Earthfault protection with IDMT, Definite time and instantaneous characteristics.
		PT Supervision
		Under Frequency, Over Frequency, Rate of Change of Frequency
		Trip Circuit Supervision
		Reverse Blocking Function
		Circuit Breaker failure protection
		Relay shall communicate all measured and monitored parameters like current, voltage, active power, reactive power, apparent power, power factor, phase angle, event record, fault record, DIs , DOs etc to SCADA
		Auto Re-closer (If Specified in Tender document)
17.12.3	User Configurable DIs and Dos	Relay-1 & 2 should have a total of 16 DIs and 12 DOs (minimum). Each relay should have atleast 2 DIs and 6 Dos
17.12.4	Note	Combining functions of Relay-1 and Relay-2 in single relay is not acceptable.
17.12.5	SLD	Refer annexure – F11
17.13	Protection Relays for 33kV Buscoupler for Switchboard of 66/33kV Autotransformer	
17.13.1	Relay 1	Bay control unit having MIMIC with 3-phase Overcurrent and earthfault protection with IDMT, Definite time and instantaneous characteristics.
		Trip Circuit Supervision

DocUUID : 23f7dc1d-9724-406f-b48e-bdff68bb2c4f

		Sync check function
		Circuit Breaker failure protection
		PT supervision (fuse failure monitoring) for Bus PT-1
		User Configurable 16 DIs and 8 DOs (minimum)
		Relay shall communicate all measured and monitored parameters like current, voltage, active power, reactive power, apparent power, power factor, phase angle, event record, fault record, DIs , DOs etc to SCADA
17.13.2	Relay 2	Under Frequency, Over Frequency, Rate of Change of Frequency
		PT supervision (fuse failure monitoring) for Bus PT-2
		Auto Re-closer (If Specified in Tender document)
17.13.3	SLD	Refer annexure – F12
17.14	Protection Relays – SCADA Interfacing	
17.14.1	Configuration and wiring of DIs in Protection Relays (All panels) for routing status signals to SCADA	DI-1 – TC-1 Healthy DI-2 – TC-2 Healthy DI-3 – CB Autotrip (contact from lockout relay) DI-4 – CB Open DI-5 – CB Close DI-6 – CB in service DI-7 – CB in test DI-8 – Spring Charged DI-9 – L/R switch Remote DI-10 – AC fail DI-11 – Adjacent Panel DC Fail/DC MCB Trip DI-12 – Adjacent Panel Protection Relay fail DI-13 – PT MCB trip (metering and protection, for incomer and capacitor panel only) Sequence of DIs should be strictly as mentioned above. Change in sequence of DIs will not be acceptable.
17.14.2	Configuration and wiring of	DO-1 – CB Open

DocUUID : 23f7dc1d-9724-406f-b48e-bdff68bb2c4f

	DOs in Protection relays (all panels) for execution of SCADA commands through SCADA interface port (refer clause 16.1.5).	DO-2 – CB close DO-3-Electrical Reset Sequence of DOs should be strictly as mentioned above. Change in sequence of DOs will not be acceptable.
17.14.3	Looping of numerical relays	All relays in the switchboard have to be looped to form a common bus for interfacing with SCADA.
17.14.4	Spare DIs and DOs	Should be wired upto terminal block for future use.
17.15	Transformer Monitoring cum AVR Relay	
17.15.1	Features	As per annexure –B
17.15.2	Requirement	To be provided in 33KV Transformer panel only
17.16	Auxiliary Relays – General Features	
17.16.1	Relays for auxiliary, supervision, trip and timer relays	Static or electromechanical type.
17.16.2	Reset mechanism for auxiliary relays	Self reset contacts except for lock-out relays.
17.16.3	Reset mechanism for lockout relays	Electrical reset type for 11kV outgoing panels only. Hand reset type for all other panels.
17.16.4	Operation indicators	With hand-reset operation indicators (flags) or LEDs with pushbuttons for resetting.
17.17	Auxiliary relays – Requirement	
17.17.1	Anti pumping (94), lockout (86),	a. For each breaker b. Lock Out Relay mounting shall be flush type on front side of Panel
17.17.2	PT selection relays	To be provided in bus coupler panel for selection between Bus PT and Line PT of respective sections.
17.17.3	Switchgear with two incomer & bus coupler	Lockout relay (86) contact of each incoming breakers to be wired in series in closing circuit of other incoming breakers & bus coupler.
17.17.4	Contact Multiplication Relay for Tripping and closing of Breaker	a. One for Tripping and one for closing with each breaker b. Current Rating shall be 30 percent more than closing and tripping coil current rating c. Shall be of closed type i.e. direct

DocUUID : 23f7dc1d-9724-406f-b48e-bdff68bb2c4f

		unauthorised access shall not be provided.
17.17.5	Auxiliary Relays, contact multiplication relays etc.	To effect interlocks and to exchange signals of status & control
17.17.6	Transformer trouble relays (For 33kV Transformer feeder panel only)	Auxiliary relays with indicating flags (contactors will not be accepted) should be provided for the following trip and alarm commands – a. Buchholz trip b. OSR trip c. PRV trip d. SPR trip e. WTI Trip f. OTI Trip g. Buchholz Alarm h. Low oil level alarm i. OTI Alarm j. WTI Alarm.
17.18	General Requirements for all relays/contactors	Auxiliary supply will be 50/220VDC based on requirement. All relays/contactors shall be suitable for continuous operation at 15% overvoltage.

18 SYNCH CHECK PHILOSOPHY

18.1	Dead Bus – Live Line	a. Application - Required for Charging of Bus from Line Supply b. Logic - Sync check relay installed on line panel will check the line and bus voltage and derive that the line is live and bus is in dead condition i.e bus has to be charged by the line breaker. Hence Sync check relay will allow the line breaker to close in this condition.
18.2	Dead Line – Live Bus	a. Application - Required for Charging of Line from Bus Supply b. Logic - Sync check relay installed on line panel will check line and bus voltage and derive that the line is dead and bus is in live condition i.e line has to charged from bus. Hence Sync check relay will allow the line breaker to close in this condition.

DocUUID : 23f7dc1d-9724-406f-b48e-bdff68bb2c4f

18.3	Live Bus – Live Line	a. Application - Required for paralleling of bus and line supply b. Logic - Sync check relay installed on line panel will compare magnitude and phase sequence of line and bus voltages. If the variations are within the range set in the relay, sync check relay will allow the closing of line breaker.
18.4	Live Bus – Dead Bus	a. Application – Required for charging of dead bus through another live bus. b. Logic – Sync check relay installed on bus coupler/bus section panel will check voltage of both buses and derive that one bus is dead and other bus is live i.e dead bus is being charged from live bus. Hence Sync check relay will allow the bus coupler/bus section breaker to close in this condition.
18.5	Live Bus – Live Bus	a. Application – Required for paralleling of two buses/bus sections. b. Logic – Sync check relay installed on bus coupler/bus section panel will compare the magnitude and phase sequence of voltage of both buses (or bus sections). If the variations are within the range set in the relay, sync check relay will allow the bus coupler/bus section breaker to close.

19 ETHERNET SWITCHES & FIBRE OPTICS

19.1	Ethernet Switch	
19.1.1	Numbers	Two at each site
19.1.2	FO Port	16 Nos
19.1.3	RJ 45 Port	4 Nos
19.1.4	Communication Protocol	IEC 61850
19.1.5	Network Protocol	PRP
19.1.6	Downlink Rate	100 MBPS
19.1.7	Uplink Rate	1 GBPS
19.1.8	Coating	Conformal
19.1.9	Power Supply Voltage	220 / 50 VDC as per site condition
19.1.10	Grade	Industrial
19.1.11	Certification required	KEMA,CE & FCC for IEC 61850 compliance
19.1.12	Operating Temperature	
19.1.13	Mounting	In Switchgear Panel
19.1.14	Blinking LED Indicators	On each RJ45 ports

DocUUID : 23f7dc1d-9724-406f-b48e-bdff68bb2c4f

19.1.15	Separate Maintenance/console Part	Required
19.1.16	Latency	Less than or equal to 10 ms
19.1.17	Fibre Optic Compatibility	Multimode, 1310 nm
19.1.18	Placement	Din Rail Arrangement Inside Switchgear
19.2	Fibre Optics (Patch Cord) and Ethernet cable	
19.2.1	Connection	From Relays, Meters to Ethernet Switch
19.2.2	Mode of Fibre Optics	Multimode
19.2.3	Wavelength	1310 nm
19.2.4	Ethernet Cable Type	CAT VI
19.2.5	Associated Connectors and Accessories	Required

20 SPACE HEATERS

20.1	Type	Thermostat controlled with switch for isolation
20.2	Location	In Breaker & HV cable compartment, mounted on an insulator. Heater position in cable compartment should be easily accessible after cable termination. Heater position in breaker chamber shall be accessible with breaker racked-in.

21 SOCKETS, SWITCHES ,ILLUMINATION LAMPS & MCBs

21.1	Illumination lamp with switch	For LV & cable chamber
21.2	Universal type (5/15 A) Socket with Switch	In LV chamber
21.3	MCBs	a. MCBs of Proper rating may be provided. b. Although Main MCB shall be directly wired up to Trip Circuit, No other MCB shall be provided in between c. Rating of MCB shall be 300% of full load current of relevant circuit

DocUUID : 23f7dc1d-9724-406f-b48e-bdff68bb2c4f

22 NAMEPLATES AND MARKING

22.1	Nameplates	To be provided as per the following description
22.1.1	Equipment Nameplates	a. All equipment mounted on front side as well as equipment mounted inside the panels shall be provided with individual name plates with equipment designation engraved. b. All front mounted equipment shall be also provided at the rear with individual name plates engraved with tag numbers corresponding to the one shown in the panel internal wiring to facilitate easy tracing of the wiring.
22.1.2	Feeder Nameplates	a. Large and bold name plate carrying the feeder identification/ numbers shall be provided on the top of each panel on front as well as rear side. On rear side, nameplate should be provided on frame. b. Rear bottom of each panel shall have a nameplate clearly indicating the following: Customer Name – BSES Delhi; PO No. & date; Drawing Reference No. etc.
22.1.3	Rating Plate	Following details are to be provided on Panel rating plate: a. Customer Name – BSES Yamuna Power Limited b. PO No. & Date – c. Complete CT Rating plate details d. Complete PT Rating plate details e. Complete CB Rating Plate details f. Date of Manufacturing- g. Warranty Period- h. Customer care No- i. Control Voltage-
22.1.4	Material	Non-rusting metal or 3 ply lamicoid. Nameplates shall be black with white engraving lettering. Stickers are

DocUUID : 23f7dc1d-9724-406f-b48e-bdff68bb2c4f

		not allowed.
22.1.5	Fixing	All nameplates/rating plates shall be riveted to the panels at all four corners. Bolting/screwing is not acceptable.
22.2	Markings	Each switch shall bear clear inscription identifying its function. Similar inscription shall also be provided on each device whose function is not otherwise identified. If any switch or device does not bear this inscription separate nameplate giving its function shall be provided for it. Switch shall also have clear inscription for each position indicating e.g. Trip-Neutral close, ON-OFF etc.

23 SURFACE TREATMENT & PAINTING

23.1	Surface Treatment	Sand blasting or by seven tank process.
23.2	Paint type	Powder coated. Pure polyester base grade-A structure finish.
23.3	Paint shade	RAL 7032 for external & internal surface
23.4	Paint thickness	Minimum 50 microns

24 APPROVED MAKES OF COMPONENTS

24.1	Numerical Relays	Siprotec series of Siemens, Micom series of Schneider/Alstom. Numerical relays used in complete switchboard should be of same make. Use of two different makes of relays in a switchboard is not acceptable.
24.2	Transformer monitoring cum AVR relay	A-eberle
24.3	Electromechanical Relays	Alstom/Schneider/Siemens/ABB/ER
24.4	Aux Relays	ABB/Jyoti/Omran
24.5	Contactors	ABB/Siemens/Telemechanique

DocUUID : 23f7dc1d-9724-406f-b48e-bdff68bb2c4f

24.6	Instrument transformers	ECS/ Pragati/ Gemini/Schneider/CGL/Kappa/Narayan power tech
24.7	MCBs	Siemens/Schneider/Legrand/ABB
24.8	Control switches	Switron/Kaycee
24.9	Test terminal blocks	IMP/Schneider/Alstom
24.10	Terminal blocks	Elmex/Connectwell
24.11	Indicating lamps	Siemens/ Teknic/ Binay
24.12	Surge Suppressors	Oblum/Tyco
24.13	Meters	Rishabh(Rish delta Energy)/Conzerv
24.14	Ethernet Switch	Ruggedcom/Hirschman

25 INSPECTION , TESTING & QUALITY ASSURANCE

25.1	Type Tests	The product must be of type tested as per applicable Indian standards / IEC
25.1.1	Type test report validity period	Last five years from date of bid submission. Bidder with type test report more than 5 years old needs to re-conduct the tests without any commercial implication to BSES
25.1.2	Pressure relief device operation	Test certificate for panel to be submitted
25.2	Acceptance & Routine tests	As per the specification and relevant standards. Charges for these tests shall be deemed to be included in the equipment price. In addition to these tests, following tests have to be carried out as acceptance tests -
25.2.1	Primary injection test	To be carried out on panels selected for testing
25.2.2	Temperature rise test	One panel per Purchase order (PO with minimum 10 panels) without any commercial implication to BSES. In-house testing is acceptable.
25.2.3	Paint Thickness/ Peel off	To be carried out on panels selected for testing

DocUUID : 23f7dc1d-9724-406f-b48e-bdff68bb2c4f

25.3	Inspection	The purchaser/owner reserves the right to witness all the acceptance/routine tests during inspection.
25.4	Notice to purchaser for conducting type tests	At least three weeks in advance
25.5	Quality Assurance	
25.5.1	Vendor quality plan	To be submitted for purchaser approval
25.5.2	Inspection points	To be mutually identified & agreed in quality plan

26 PACKING

26.1	Packing Protection	Against corrosion, dampness, heavy rains, breakage and vibration. During transportation/ transit and storage, panels may be subjected to outdoor conditions. Hence, packing of each panel shall be weatherproof.
26.2	Packing for accessories and spares	Robust wooden non returnable packing case with all the above protection & identification
26.3	Details of Packing Identification Label on each packing case	a. Individual serial number b. Purchaser's name c. PO number (along with SAP item code, if any) & date d. Equipment Tag no. (if any) e. Destination f. Project Details g. Manufacturer / Supplier's name h. Address of Manufacturer / Supplier / it's agent i. Description and Quantity j. Country of origin k. Month & year of Manufacturing l. Case measurements m. Gross and net weights in kilograms n. All necessary slinging and stacking instructions

DocUUID : 23f7dc1d-9724-406f-b48e-bdff68bb2c4f

27 SHIPPING

27.1	Shipping	The bidder shall ascertain at an early date and definitely before the commencement of manufacture, any transport limitations such as weights, dimensions, road culverts, Overhead lines, free access etc. from the Manufacturing plant to the project site. Bidder shall furnish the confirmation that the proposed Packages can be safely transported, as normal or oversize packages, up to the site. Any modifications required in the infrastructure and cost thereof in this connection shall be brought to the notice of the Purchaser.
		The seller shall be responsible for all transit damage due to improper packing.

28 HANDLING AND STORAGE

28.1	Handling and Storage	Manufacturer instruction shall be followed. Detail handling & storage instruction sheet / manual needs to be furnished before commencement of supply.

29 DEVIATION

29.1	Deviation	Deviations from this Specification shall be provided in excel sheet with tender by reference to the Specification clause/GTP/Drawing and a description of the alternative offer. In absence of such a statement, it will be assumed that the bidder complies fully with this specification.

DocUUID : 23f7dc1d-9724-406f-b48e-bdff68bb2c4f

30 ACCESSORIES & TOOLS

30.1	Type and Quantity	Bidder to indicate
30.2	Special tools & tackles required for erection, testing, commissioning and maintenance of the switchboard	The cost of these items shall be indicated separately in the bid as optional.
30.3	Suitable handling truck / trolley for lifting and moving the circuit breaker	To be supplied. (Two trolleys for each type/rating of breaker)

31 DRAWINGS & DATA SUBMISSION MATRIX

Drawing submission shall be as per the matrix given below. All documents/ drawing shall be provided on A3/A4 sheet (based on legibility) in box file with separators for each section. PDF shall also be provided of all documents via USB. Deviation sheet and GTP shall be provided in excel sheet .Language of the documents shall be English only. Deficient/ improper document/ drawing submission shall be liable for rejection.

S. No	Head	Bid	Drawing Approval	Pre Dispatch	Pre Closure
31.1	Contact Person Name, Email ID and Mobile Number	Required			
31.2	Consolidated Deviation Sheet	Required	Required		
31.3	GTP	Required	Required		
31.4	Relevant Type Test as per IS/IEC	Required			
31.5	Power Cable and control cable Philosophy and Schedule		Required		
31.6	Manufacturer's quality assurance plan and certification for quality standards		Required		
31.7	Sizing Calculation of Associated Equipment		Required		

DocUUID : 23f7dc1d-9724-406f-b48e-bdff68bb2c4f

31.8	Recommended Spares Apart from spares stated in Spec(for five years of operation)		Required		
31.9	11 kV / 33 kV Switchgear drawing				
31.9.1	General Arrangement	Required	Required		
31.9.2	Sectional Layout		Required		
31.9.3	Door Layout		Required		
31.9.4	LV Box Internal Layout		Required		
31.9.5	SLD	Required	Required		
31.9.6	Schematic Circuit diagram and Scheme of Each type of Panel		Required		
31.9.7	Communication Architecture		Required		
31.9.8	Bus Bar Arrangement		Required		
31.9.9	QAP		Required		
31.9.10	Panel wise BOQ		Required		
31.9.11	Logic Operation Diagram		Required		
31.9.12	Plan		Required		
31.9.13	Synch Logic Diagram		Required		
31.9.14	Foundation Diagram		Required		
31.9.15	DI sheet		Required		
31.9.16	DO Sheet		Required		
31.9.17	TB Details		Required		
31.9.18	Make of all Component as per specification		Required		
31.10	Drawing of CT, PT and Surge Arrestor		Required		
31.11	Drawing of Substation Room		Required		
31.12	Ventilation detail requirement of GIS Room		Required		

DocUUID : 23f7dc1d-9724-406f-b48e-bdff68bb2c4f

31.13	Installation, erection and commissioning manual for switchgear		Required		
31.14	Inspection Reports			Required	
31.15	As manufacturing Drawings			Required	
31.16	Operation and Maintenance Manual			Required	Required
31.17	Trouble shooting manual			Required	Required
31.18	As built Drawings				Required
31.19	Test Report				Required
31.20	Weekly progress report				Required

DocUUID : 23f7dc1d-9724-406f-b48e-bdff68bb2c4f

ANNEXURE – A - SCOPE OF SUPPLY

Scope of supply should include the following –

1.1 Design, manufacture, assembly, testing at manufacturer's works, properly packed for transport, supply and FOR delivery at site of following 11kV / 33kV Switchgears as per enclosed specification and single line diagram.

1.2 Base channel frame of the switchgears with hardware.

1.3 Two trolleys for breaker of each size are to be provided per switchboard.

1.4 Programming software and communication cord for numerical relays.

1.5 Unit price of 33kV Incomer with Distance relay as primary protection and 33kV Incomer with Line differential relay as primary protection should be mentioned separately in the bid. Primary protection to be used in Incomer panel will be finalized based on site requirement.

1.6 Unit price of Bus PT should be indicated separately in the bid to enable addition/deletion based on site requirement.

1.7 Bidder should indicate price of one set of special tools and tackles (if any) required for maintenance of switchgear and its components.

1.8 Bidder should indicate price of each spare as per Annexure E.

1.9 All relevant drawings, data and instruction manuals.

DocUUID : 23f7dc1d-9724-406f-b48e-bdff68bb2c4f

ANNEXURE – B – TRANSFORMER MONITORING CUM AVR RELAY

1	General features	
1.1	Technology and Functionality	Microprocessor based with provision for multifunction control and monitoring.
1.2	Mounting	Flush Mounting
1.3	Architecture	Hardware and software architecture shall be modular and disconnectable to adapt the control unit to the required level of complexity as per the application.
1.4	Programming and configuration	AVR shall utilize a user friendly setting and operating multilingual software in windows environment with menus and icons for fast access to the data required.
1.5	User Machine Interface	UMI with an alphanumeric key pad and graphical LCD display with backlight indicating measurement values and operating messages. Capability to access and change all settings and parameters.
1.6	PC Interface port	Front port (preferably serial) for configuration using PC. Cost of licensed software and communication cord, required for programming of offered protection relays using PC, shall be mentioned separately in the bid.
1.7	SCADA Interface port	LC Type Dual fibre optic port for interfacing with SCADA on IEC 61850 & PRP compatible. Through these ports relays shall be connected to Ethernet switches.
1.8	Self diagnosis	Shall be able to detect internal failures. A watchdog relay with changeover contact shall provide information about the failure.
1.9	Cable Termination	Termination of cable shall be at rear side.
1.10	Auxiliary supply	220VDC or 48VDC
2	Inputs and Outputs	
2.1	CT Input	1/5A selectable through programming
2.2	PT Input	110VAC
2.3	Binary Inputs	Sixteen programmable binary inputs should be provided

DocUUID : 23f7dc1d-9724-406f-b48e-bdff68bb2c4f

2.4	Analog Inputs (4-20mA)	One input to be provided
2.5	PT-100 direct input	Two inputs to be provided
2.6	Direct Resistance Input	For tap position indication (18 steps)
2.7	Binary Outputs	Ten programmable binary outputs should be provided
3	Control	
3.1	Control Tasks	Ability to implement control functions through programmable logics
3.2	Voltage setting	Programmable Voltage set point
3.3	Voltage Regulation	Raise/Lower tap position to maintain the preset value of voltage.
3.4	Voltage Regulation modes	Automatic and Manual
3.5	Operation Modes	Local and Remote
3.6	Fan and Pump control	To be provided
3.7	Transformer Paralleling	Capability to parallel transformers whose AVRs are interconnected via a communication network.
4	SCADA Interfacing	
4.1	Configuration of DIs for routing alarm/trip signals to SCADA.	DI-1 – Buchholz trip DI-2 – OSR Trip DI-3 – PRV trip DI-4 – SPR trip DI-5 – OTI trip DI-6 – WTI trip DI-7 – Buchholz alarm DI-8 – Oil Level low alarm (MOG alarm) DI-9 – WTI alarm DI-10 – OTI alarm DI-11 – Tap changer trouble/stuck/out of step DI-12 – Tap changer motor supply fail DI-13 – Tap changer in local control All signals from DI-1 to DI-10 are to be wired up from transformer trouble auxiliary relays.
4.2	Configuration of DOs for	DO-1 – Tap raise

DocUUID : 23f7dc1d-9724-406f-b48e-bdff68bb2c4f

	executing commands from SCADA through interface port/CRP	DO-2 – Tap lower DO-3 – Fan group 1 control DO-4 – Fan group 2 control
4.3	Spare DIs and DOs	To be wired upto the terminal block.
5	Measurement, Event Recording and Monitoring	
5.1	Measured Quantities (optional)	Voltage, Current, Active Power, Reactive Power, Apparent Power, Power factor, frequency
5.2	Event Recording	Facility for recording parameters during various events such as tap change, change in binary input status etc.
5.3	Monitoring	Capability to monitor important transformer parameters such as Oil temperature, Winding Temperature etc and give indication/alarm when the value of a particular parameter exceeds the preset value.

DocUUID : 23f7dc1d-9724-406f-b48e-bdff68bb2c4f

ANNEXURE – C - TECHNICAL PARTICULARS

1.0	SWITCHGEAR		
1.1	Type	Metal clad, air insulated with VCB type circuit breaker	
1.2	Service	Indoor	
1.3	Mounting	Free standing, floor mounted	
1.4	System Voltage	11 KV	33kV
1.5	Voltage variation	+/- 10%	
1.6	Frequency	50 Hz +/- 5%	
1.7	Phase	3	
1.8	Rated voltage	12 KV	36 kV
1.9	Rated current	As per SLDs given in Annexure-F	
1.10	Short time rating for 3 sec.	25kA	25kA
1.11	Internal arc classification and rating		
1.11.1	Classification	IAC – A - FLR	IAC – A - FLR
1.11.2	Rating	25kA for 1 second	25kA for 1 second.
1.12	Insulation level (PF rms / Impulse peak)	28 kV / 75 kV	70 kV/ 170 kV
1.13	System ground	Effectively earthed	Effectively earthed
1.14	Enclosure degree of protection	IP – 4X for high voltage compartment and IP – 5X for metering and protection compartment	
1.15	Bus bar - Main	Rating as per SLDs given in annexure - F, Short time rating as per clause 1.10.	
1.15.1	Material	Tinned Electrolytic copper	
1.15.2	Bus bar sleeve	Sleeved with shrouds on joints. Tape on joints is not acceptable.	
1.15.3	Bus identification	Colour coded	
1.15.4	Temperature rise	40 deg. C for conventional joints. 55 deg. C for silver plated joints	
1.16	Auxiliary bus bar	Electrolytic grade tinned copper	

DocUUID : 23f7dc1d-9724-406f-b48e-bdff68bb2c4f

1.17	Auxiliary DC Supply	220 V DC / 48 V DC	
1.18	Auxiliary AC supply	240 V AC 50 Hz	
1.19	Hardware	Stainless steel.	
1.20	Earth bus	Aluminium	
1.21	Bus duct entry	From top (where ever applicable)	
1.22	Power cable entry	From bottom and rear	
1.23	Control cable entry	From bottom and front (i.e breaker compartment)	
2.0	CIRCUIT BREAKER		
2.1	Voltage class, insulation level, short time rating	As specified for switchgear	
2.2	Rated current	As per SLDs given in annexure - F. Use of two breakers in parallel to meet the required current rating shall not be acceptable.	
2.3	Duty cycle	O – 0.3 sec – CO - 3min - CO	
2.4	Short circuit rating		
2.4.1	A.C sym. breaking current	25kA	25kA
2.4.2	Short circuit making current	62.5kA	62.5kA
2.5	Operation time		
2.5.1	Break time	Not more than 4 cycles	
2.5.2	Make time	Not more than 5 cycles	
2.6	Range of Auxiliary Voltage		
2.6.1	Closing	85% - 110%	
2.6.2	Tripping	70% - 110%	
2.6.3	Spring Charging	85% - 110%	
2.7	No. of spare aux. Contacts of Breaker, for Owner's use.	Minimum 6 NO + 6 NC	
2.8	No. of spare contacts of Service and Test position limit switch	2 NO	

DocUUID : 23f7dc1d-9724-406f-b48e-bdff68bb2c4f

3.0	CURRENT TRANSFORMERS		
3.1	Voltage class, insulation level and short time rating	As specified for switchgear	
3.2	Type	Cast resin, window / bar primary type	
3.3	Class of insulation	Class E or better	
3.4	Ratio	As per SLDs given in annexure - F	
3.5	Number of secondaries	As per SLDs given in annexure - F	
3.6	Accuracy class		
3.6.1	Protection core	5P20	
3.6.2	Protection (Diff. / REF)	PS	
3.6.3	Metering	0.2s	
3.6.4	Core balance CT	PS	
3.7	Burden (VA)	Adequate for the protection & instruments offered	
3.8	Excitation current of PS Class CTs	30 mA at Vk/4	
3.8	Knee Point Voltage of PS Class CTs (Vk)	>= 40 (Rct + 4)	
3.9	Primary operating current sensitivity of CBCTs	5A	
4.0	VOLTAGE TRANSFORMERS		
4.1	Type	Cast resin, draw out type, single phase units	
4.2	Rated Voltage		
4.2.1	Primary	11000/sq.rt.3	33000/sq.rt.3
4.2.2	Secondary	110V/sq.rt.3	
4.3	No. of phases	3	
4.4	No. of secondary windings	2	
4.5	Method of connection	Star/Star	
4.6	Rated voltage factor	1.2 continuous, 1.9 for 30 seconds	
4.7	Class of insulation	Class E or better	

DocUUID : 23f7dc1d-9724-406f-b48e-bdff68bb2c4f

4.8	Accuracy class		
4.8.1	Protection	3P	
4.8.2	Metering	0.2	
4.9	Primary and secondary fuses	HRC current limiting type, Primary fuse replacement shall be possible with VT in withdrawn position	
5.0	HV FUSES		
5.1	Voltage class	12kV	36kV
5.2	Rupturing capacity	50kA	
5.3	Rated current	As per application	
6.0	SURGE ARRESTORS	For 11kV switchgear	For 33kV switchgear
6.1	Rated Voltage	9kV	30kV
6.2	Maximum continuous operating voltage (MCOV)	7.65kV	25kV
6.3	Discharge current	10kA	10kA
6.4	Discharge class	3	3

Note - The auxiliary DC voltage shall be checked on a case to case basis by Purchaser

DocUUID : 23f7dc1d-9724-406f-b48e-bdff68bb2c4f

ANNEXURE – D - GUARANTEED TECHNICAL PARTICULARS (DATA BY BIDDER)

Vendor must submit clause wise compliance in Excel sheet against specification at the time of drawing approval clearly highlighting the deviations from specification against each clause.

DocUUID : 23f7dc1d-9724-406f-b48e-bdff68bb2c4f

ANNEXURE – E – SPARES REQUIREMENT

Unit rate of all below mentioned spares have to be provided in the bid.

S No.	Description	Qty
1	Line voltage transformer	3 (1 set)
2	Bus voltage transformer	3 (1 set)
3	Current transformer of each ratio	3 (1 set)
4	Trip Coil	4
5	Closing Coil	4
6	CB Spring charging motor	2
7	Auxiliary switch	2 sets (2 Nos. each type)
8	Bursting disc / pressure relief plate complete	2
9	Numerical relay of each type	1 nos. (each type)
10	Ethernet Switch	1 No (Each Site)
11	Optical Fibre	20% of Supplied Items
12	CAT VI Ethernet cable for Communication	20% of Supplied Items
13	Vacuum Interrupter Bottle	1 set (3 nos.) of each rating
14	Breaker contacts for busbar	1 set (3 nos.) of each rating
15	Breaker testing cable with plug suitable for breaker on one side and plug suitable for the panel on the other side	3 meter(each type)
16	SCADA Spare	20% of Supplied Items

ANNEXURE – F – SLDs

DocUUID : 23f7dc1d-9724-406f-b48e-bdff68bb2c4f

ANNEXURE–F1

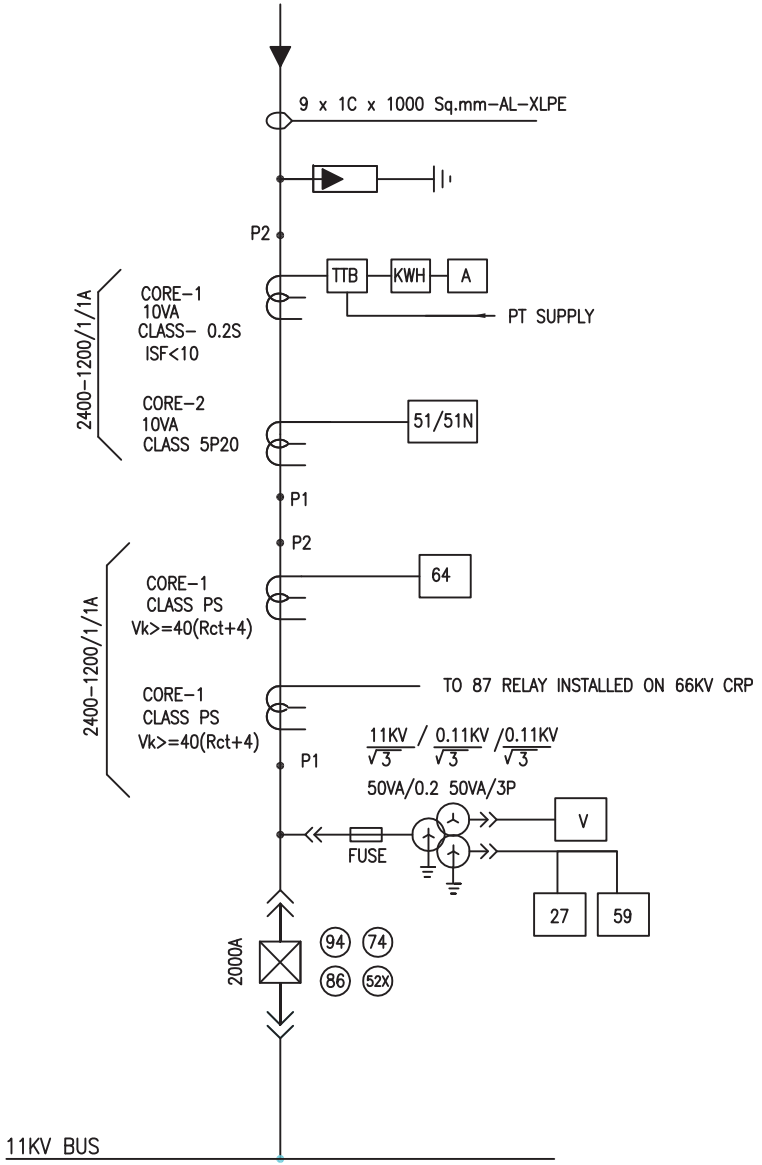

25 KA for 3 secs, 2000A at 50 degree celsius

LEGEND

SYMBOL	DESCRIPTION
	11KV SF6/VACUUM CKT. BKR. DRAWOUT TYPE
	CURRENT TRANSFORMER
	POTENTIAL TRANSFORMER
	SURGE ARRESTOR
	FUSE
52X	BREAKER AUX CONTACT MULTIPLIER
74	TRIP CIRCUIT SUPERVISION RELAY
94	ANTI PUMPING RELAY
86	HIGH SPEED TRIP RELAY
V	VOLTMETER
A	AMMETER

SYMBOL	DESCRIPTION
KWH	ENERGY METER
46	NEGATIVE PHASE SEQUENCE PROTECTION
25	SYNC CHECK
51/51N	O/C & E/F RELAY
27	UNDER VOLTAGE RELAY
87	DIFFERENTIAL RELAY
21	DISTANCE RELAY
59	OVER VOLTAGE RELAY
64	REF RELAY
67/67N	DIRECTIONAL O/C & E/F RELAY
TTB	TEST TERMINAL BLOCK

NOTE:–

1. KWH METER NOT IN SUPPLIER'S SCOPE
2. REFER CLAUSE 16 OF SPECIFICATION FOR DETAILED FUNCTIONAL REQUIREMENTS OF PROTECTION RELAYS

DRAWN	R.K/A.H H.K	TITLE:– STANDARD SLD FOR 11KV INCOMER	BSES
CHECKED	S.G/A.S		
APPD.	G.S/G.N		
DATE	29.04.22		SPECIFICATION NO. BSES–TS–66–HTSWG–R0
SCALE	NTS		SLD–SWG–11KV–01

DocUUID : 23f7dc1d-9724-406f-b48e-bdf68bb2c4f

ANNEXURE–F2

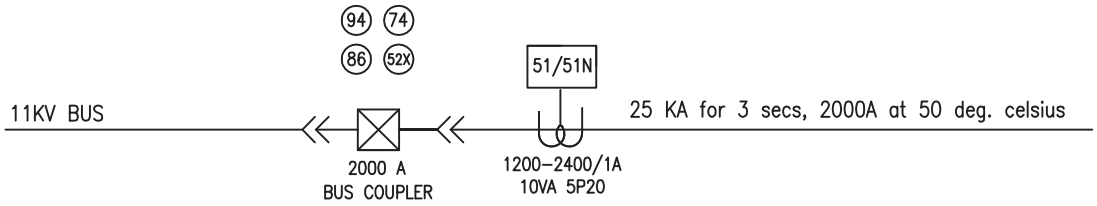

LEGEND

SYMBOL	DESCRIPTION
	11KV SF6/VACUUM CKT. BKR. DRAWOUT TYPE
	CURRENT TRANSFORMER
	POTENTIAL TRANSFORMER
	SURGE ARRESTOR
	FUSE
52X	BREAKER AUX CONTACT MULTIPLIER
74	TRIP CIRCUIT SUPERVISION RELAY
94	ANTI PUMPING RELAY
86	HIGH SPEED TRIP RELAY
V	VOLTMETER
A	AMMETER

SYMBOL	DESCRIPTION
KWH	ENERGY METER
46	NEGATIVE PHASE SEQUENCE PROTECTION
25	SYNC CHECK
51/51N	O/C & E/F RELAY
27	UNDER VOLTAGE RELAY
87	DIFFERENTIAL RELAY
21	DISTANCE RELAY
59	OVER VOLTAGE RELAY
64	REF RELAY
67/67N	DIRECTIONAL O/C & E/F RELAY
TTB	TEST TERMINAL BLOCK

NOTE:–

1. REFER CLAUSE 16 OF SPECIFICATION FOR DETAILED FUNCTIONAL REQUIREMENTS OF PROTECTION RELAYS

DRAWN	R.K/A.H H.K	TITLE:– STANDARD SLD FOR 11KV BUS SECTION	BSES
CHECKED	S.G/A.S		
APPD.	G.S/G.N		
DATE	29.04.22		
SCALE	NTS		

SPECIFICATION NO. BSES–TS–66–HTSWG–R0

SLD–SWG–11KV–02

DocUUID : 23f7dc1d-9724-406f-b48e-bdff68bb2c4f

ANNEXURE–F3

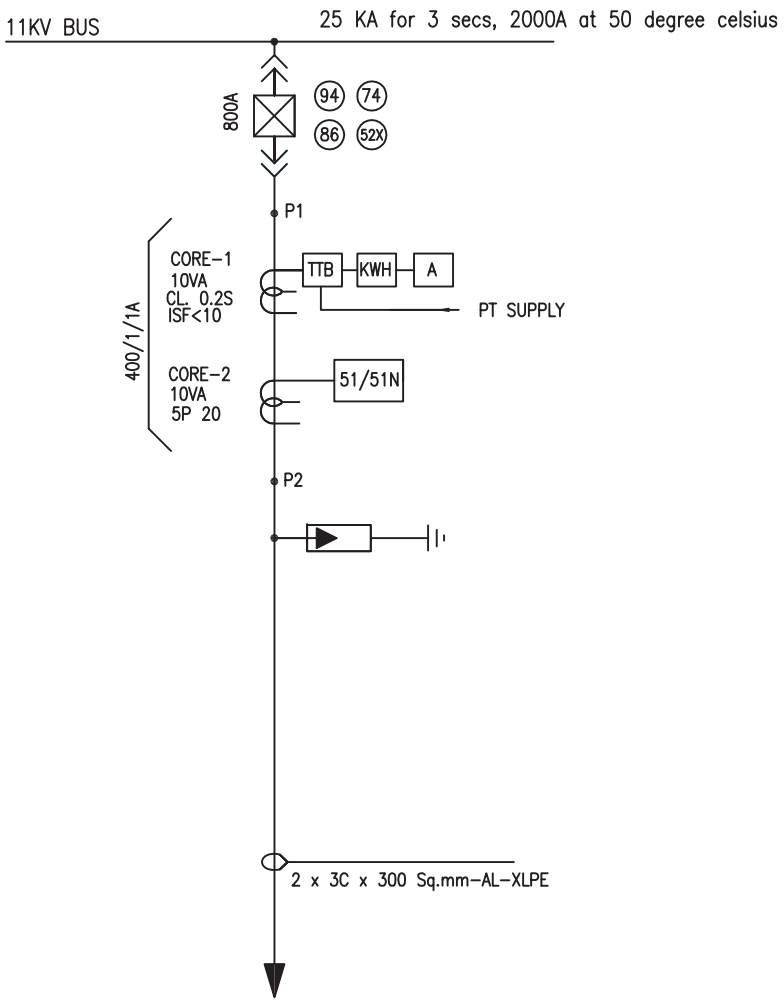

LEGEND

SYMBOL	DESCRIPTION
	11KV SF6/VACUUM CKT. BKR. DRAWOUT TYPE
	CURRENT TRANSFORMER
	POTENTIAL TRANSFORMER
	SURGE ARRESTOR
	FUSE
52X	BREAKER AUX CONTACT MULTIPLIER
74	TRIP CIRCUIT SUPERVISION RELAY
94	ANTI PUMPING RELAY
86	HIGH SPEED TRIP RELAY
V	VOLTMETER
A	AMMETER

SYMBOL	DESCRIPTION
KWH	ENERGY METER
46	NEGATIVE PHASE SEQUENCE PROTECTION
25	SYNC CHECK
51/51N	O/C & E/F RELAY
27	UNDER VOLTAGE RELAY
87	DIFFERENTIAL RELAY
21	DISTANCE RELAY
59	OVER VOLTAGE RELAY
64	REF RELAY
67/67N	DIRECTIONAL O/C & E/F RELAY
TTB	TEST TERMINAL BLOCK

NOTE:–

1. KWH METER NOT IN SUPPLIER'S SCOPE
2. REFER CLAUSE 16 OF SPECIFICATION FOR DETAILED FUNCTIONAL REQUIREMENTS OF PROTECTION RELAYS

DRAWN	R.K/A.H H.K	TITLE:– STANDARD SLD FOR 11KV OUTGOING FEEDER	BSES
CHECKED	S.G/A.S		
APPD.	G.S/G.N		
DATE	29.04.22		SPECIFICATION NO. BSES–TS–66–HTSWG–R0
SCALE	NTS		SLD–SWG–11KV–03

DocUUID : 23f7dc1d-9724-406f-b48e-bdf68bb2c4f

ANNEXURE–F4

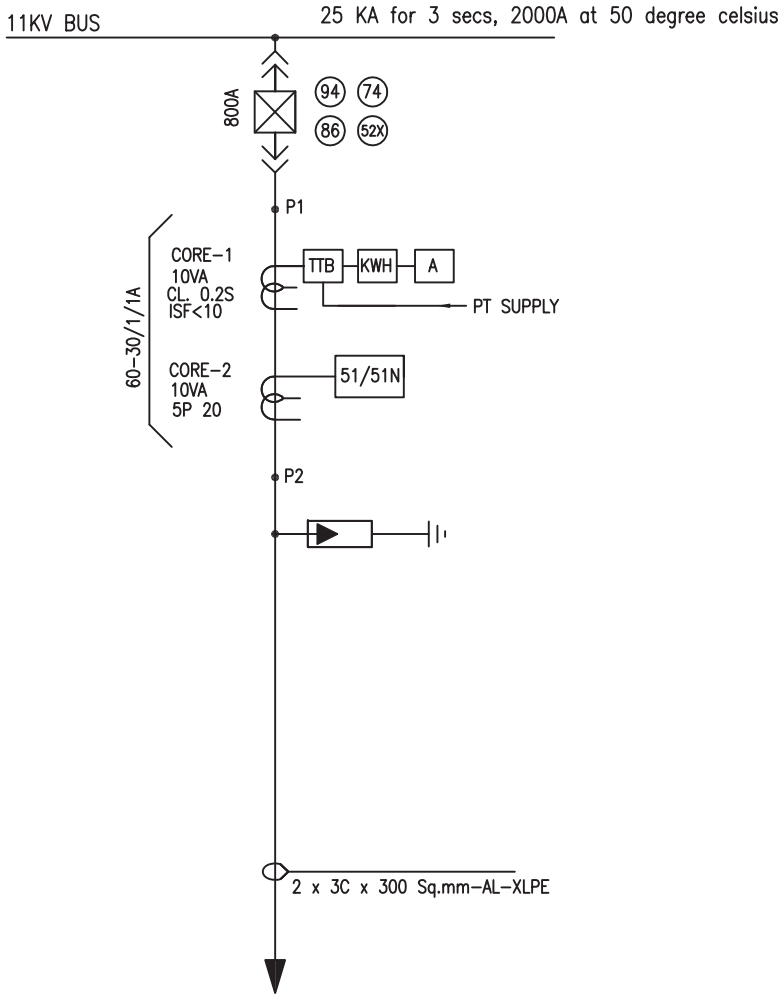

LEGEND

SYMBOL	DESCRIPTION
	11KV SF6/VACUUM CKT. BKR. DRAWOUT TYPE
	CURRENT TRANSFORMER
	POTENTIAL TRANSFORMER
	SURGE ARRESTOR
	FUSE
52X	BREAKER AUX CONTACT MULTIPLIER
74	TRIP CIRCUIT SUPERVISION RELAY
94	ANTI PUMPING RELAY
86	HIGH SPEED TRIP RELAY
V	VOLTMETER
A	AMMETER

SYMBOL	DESCRIPTION
KWH	ENERGY METER
46	NEGATIVE PHASE SEQUENCE PROTECTION
25	SYNC CHECK
51/51N	O/C & E/F RELAY
27	UNDER VOLTAGE RELAY
87	DIFFERENTIAL RELAY
21	DISTANCE RELAY
59	OVER VOLTAGE RELAY
64	REF RELAY
67/67N	DIRECTIONAL O/C & E/F RELAY
TTB	TEST TERMINAL BLOCK

NOTE:–

1. KWH METER NOT IN SUPPLIER'S SCOPE
2. REFER CLAUSE 16 OF SPECIFICATION FOR DETAILED FUNCTIONAL REQUIREMENTS OF PROTECTION RELAYS

DRAWN	R.K/A.H H.K	TITLE:– STANDARD SLD FOR 11KV STATION TRANSFORMER FEEDER	BSES
CHECKED	S.G/A.S		
APPD.	G.S/G.N		
DATE	29.04.22		SPECIFICATION NO. BSES–TS–66–HTSWG–R0
SCALE	NTS		SLD–SWG–11KV–04

DocUUID : 23f7dc1d-9724-406f-b48e-bdf66bb2c4f

ANNEXURE–F5

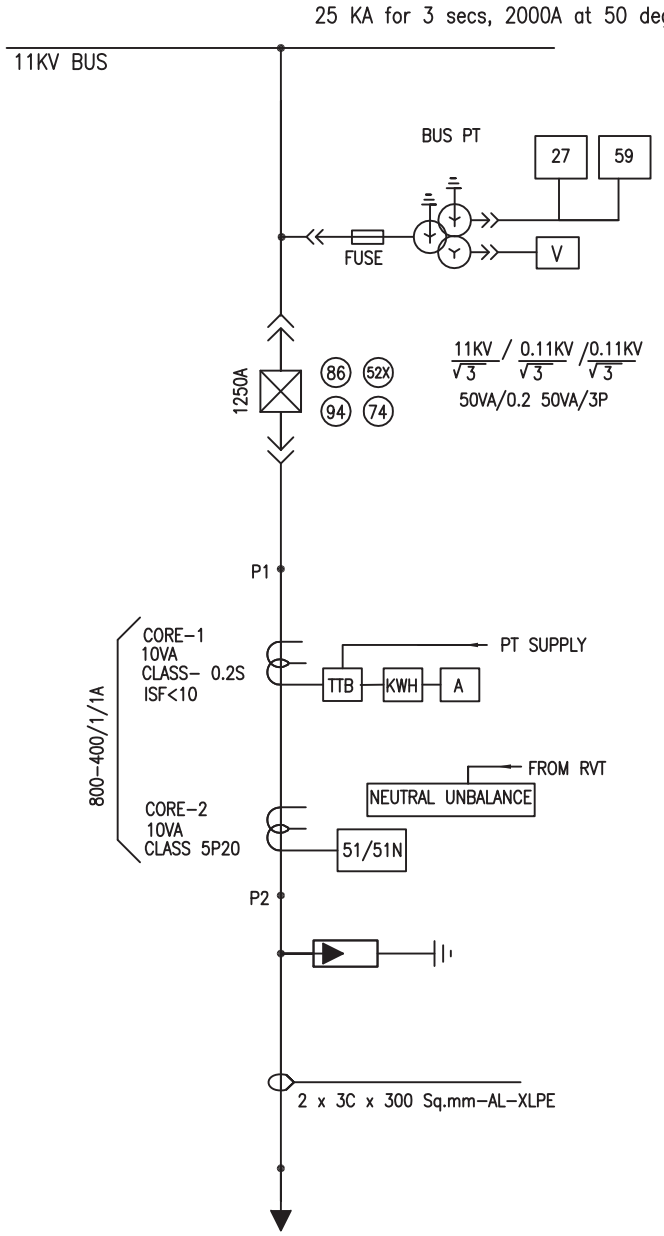

LEGEND

SYMBOL	DESCRIPTION
	11KV SF6/VACUUM CKT. BKR. DRAWOUT TYPE
	CURRENT TRANSFORMER
	POTENTIAL TRANSFORMER
	SURGE ARRESTOR
	FUSE
52X	BREAKER AUX CONTACT MULTIPLIER
74	TRIP CIRCUIT SUPERVISION RELAY
94	ANTI PUMPING RELAY
86	HIGH SPEED TRIP RELAY
V	VOLTMETER
A	AMMETER

SYMBOL	DESCRIPTION
KWH	ENERGY METER
25	SYNC CHECK
51/51N	O/C & E/F RELAY
27	UNDER VOLTAGE RELAY
87	DIFFERENTIAL RELAY
21	DISTANCE RELAY
59	OVER VOLTAGE RELAY
64	REF RELAY
67/67N	DIRECTIONAL O/C & E/F RELAY
TTB	TEST TERMINAL BLOCK

NOTE:–

1. KWH METER NOT IN SUPPLIER'S SCOPE
2. REFER CLAUSE 16 OF SPECIFICATION FOR DETAILED FUNCTIONAL REQUIREMENTS OF PROTECTION RELAYS
3. ONE BPT TO BE CONSIDERED FOR EACH CAPACITOR PANEL

DRAWN	R.K/A.H H.K	TITLE:– STANDARD SLD FOR 11KV CAPACITOR FEEDER	BSES
CHECKED	S.G/A.S		SPECIFICATION NO. BSES–TS–66–HTSWG–R0
APPD.	G.S/G.N		SLD–SWG–11KV–05
DATE	29.04.22		
SCALE	NTS		

DocUUID : 23f7dc1d-9724-406f-b48e-bdf6bbb2c4f

ANNEXURE–F6

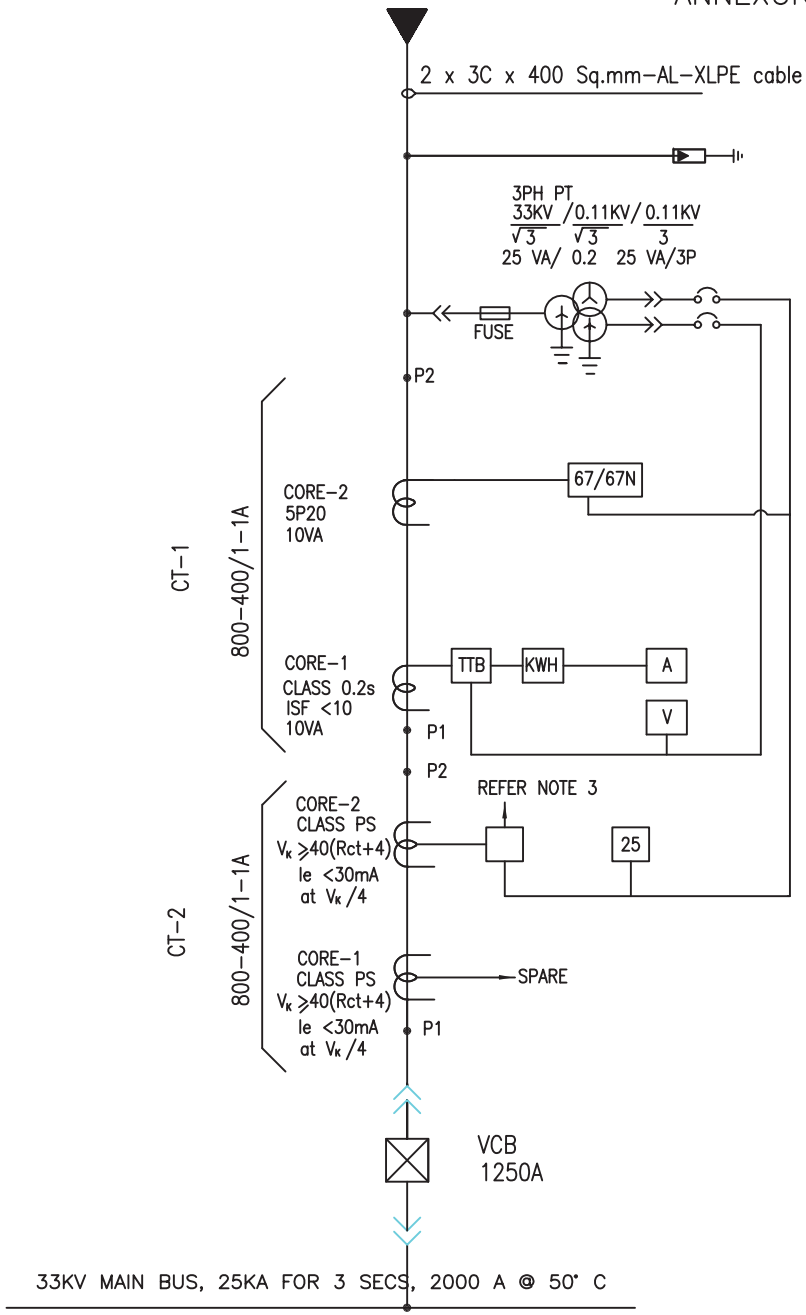

LEGEND

SYMBOL	DESCRIPTION
	11KV SF6/VACUUM CKT. BKR. DRAWOUT TYPE
	CURRENT TRANSFORMER
	POTENTIAL TRANSFORMER
	SURGE ARRESTOR
	FUSE
52X	BREAKER AUX CONTACT MULTIPLIER
74	TRIP CIRCUIT SUPERVISION RELAY
94	ANTI PUMPING RELAY
86	HIGH SPEED TRIP RELAY
V	VOLTMETER
A	AMMETER

SYMBOL	DESCRIPTION
KWH	ENERGY METER
46	NEGATIVE PHASE SEQUENCE PROTECTION
25	SYNC CHECK
51/51N	O/C & E/F RELAY
27	UNDER VOLTAGE RELAY
87	DIFFERENTIAL RELAY
21	DISTANCE RELAY
59	OVER VOLTAGE RELAY
64	REF RELAY
67/67N	DIRECTIONAL O/C & E/F RELAY
TTB	TEST TERMINAL BLOCK

NOTE:
1. KWH METER NOT IN SUPPLIER'S SCOPE
2. REFER CLAUSE 16 OF SPECIFICATION FOR DETAILED FUNCTIONAL REQUIREMENTS OF PROTECTION RELAYS
3. LINE DIFFERENTIAL OR DISTANCE RELAY. REFER CLAUSE 16.7.1 OF SPECIFICATION

DRAWN	R.K/A.H H.K	TITLE TYPICAL SLD FOR 33KV INCOMER	BSES
CHECKED	S.G/A.S		SPECIFICATION NO. BSES-TS-66-HTSWG-R0
APPD.	G.S/G.N		SLD-SWG-33KV-01
DATE	29.04.22		
SCALE	NTS		

DocUUID : 23f7dc1d-9724-406f-b48e-bdf66bb2c4f

ANNEXURE–F7

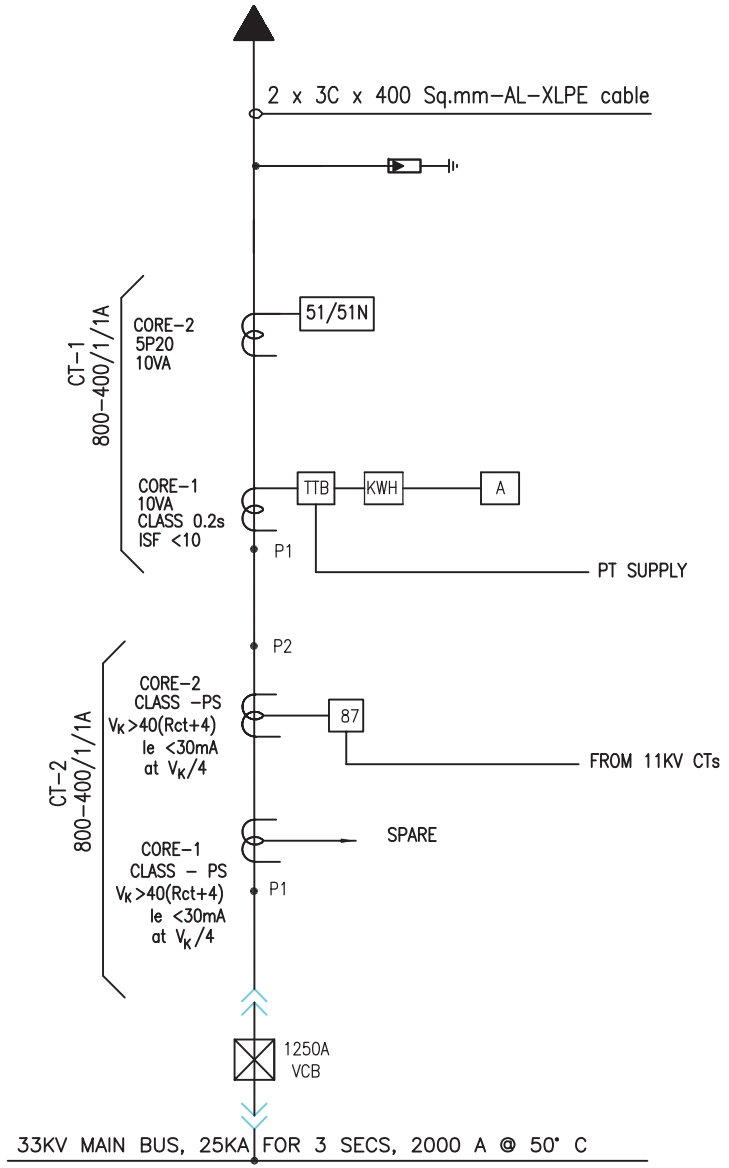

LEGEND

SYMBOL	DESCRIPTION
	11KV SF6/VACUUM CKT. BKR. DRAWOUT TYPE
	CURRENT TRANSFORMER
	POTENTIAL TRANSFORMER
	SURGE ARRESTOR
	FUSE
52X	BREAKER AUX CONTACT MULTIPLIER
74	TRIP CIRCUIT SUPERVISION RELAY
94	ANTI PUMPING RELAY
86	HIGH SPEED TRIP RELAY
V	VOLTMETER
A	AMMETER

SYMBOL	DESCRIPTION
KWH	ENERGY METER
46	NEGATIVE PHASE SEQUENCE PROTECTION
25	SYNC CHECK
51/51N	O/C & E/F RELAY
27	UNDER VOLTAGE RELAY
87	DIFFERENTIAL RELAY
21	DISTANCE RELAY
59	OVER VOLTAGE RELAY
64	REF RELAY
67/67N	DIRECTIONAL O/C & E/F RELAY
TTB	TEST TERMINAL BLOCK

NOTE:
1. KWH METER NOT IN SUPPLIER'S SCOPE
2. REFER CLAUSE 16 OF SPECIFICATION FOR DETAILED FUNCTIONAL REQUIREMENTS OF PROTECTION RELAYS

DRAWN	R.K/A.H H.K	TITLE TYPICAL SLD FOR 33/11KV TRANSFORMER FEEDER	BSES
CHECKED	S.G/A.S		SPECIFICATION NO. BSES-TS-66-HTSWG-R0
APPD.	G.S/G.N		
DATE	29.04.22		SLD-SWG-33KV-02
SCALE	NTS		

DocUUID : 23f7dc1d-9724-406f-b48e-bdff68bb2c4f

ANNEXURE–F8

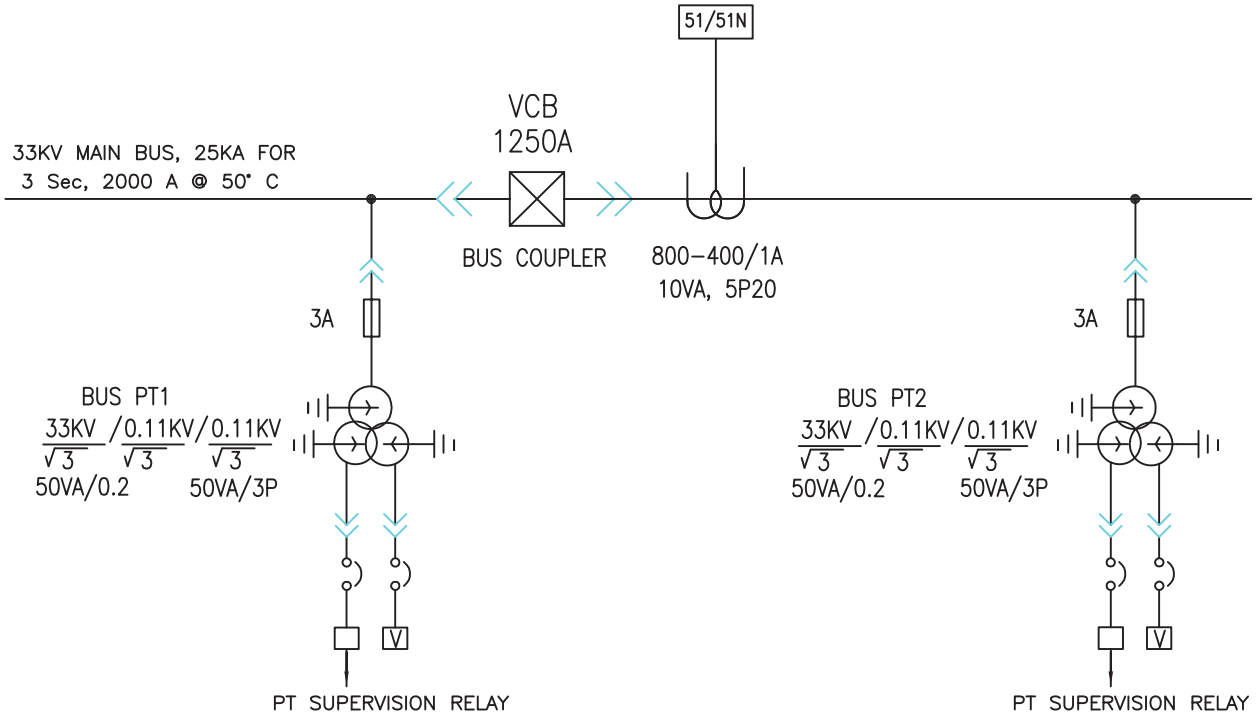

LEGEND

SYMBOL	DESCRIPTION
	11KV SF6/VACUUM CKT. BKR. DRAWOUT TYPE
	CURRENT TRANSFORMER
	POTENTIAL TRANSFORMER
	SURGE ARRESTOR
	FUSE
52X	BREAKER AUX CONTACT MULTIPLIER
74	TRIP CIRCUIT SUPERVISION RELAY
94	ANTI PUMPING RELAY
86	HIGH SPEED TRIP RELAY
V	VOLTMETER
A	AMMETER

SYMBOL	DESCRIPTION
KWH	ENERGY METER
46	NEGATIVE PHASE SEQUENCE PROTECTION
25	SYNC CHECK
51/51N	O/C & E/F RELAY
27	UNDER VOLTAGE RELAY
87	DIFFERENTIAL RELAY
21	DISTANCE RELAY
59	OVER VOLTAGE RELAY
64	REF RELAY
67/67N	DIRECTIONAL O/C & E/F RELAY
TTB	TEST TERMINAL BLOCK

NOTE:–

1. REFER CLAUSE 16 OF SPECIFICATION FOR DETAILED FUNCTIONAL REQUIREMENTS OF PROTECTION RELAYS

DRAWN	R.K/A.H H.K	TITLE	BSES
CHECKED	S.G/A.S	TYPICAL SLD FOR 33KV BUS COUPLER CUM BUS PT	SPECIFICATION NO. BSES-TS-66-HTSWG-R0
APPD.	G.S/G.N		SLD-SWG-33KV-03
DATE	29.04.22		
SCALE	NTS		

DocUUID : 23f7dc1d-9724-406f-b48e-bdff68bb2c4f

ANNEXURE–F9

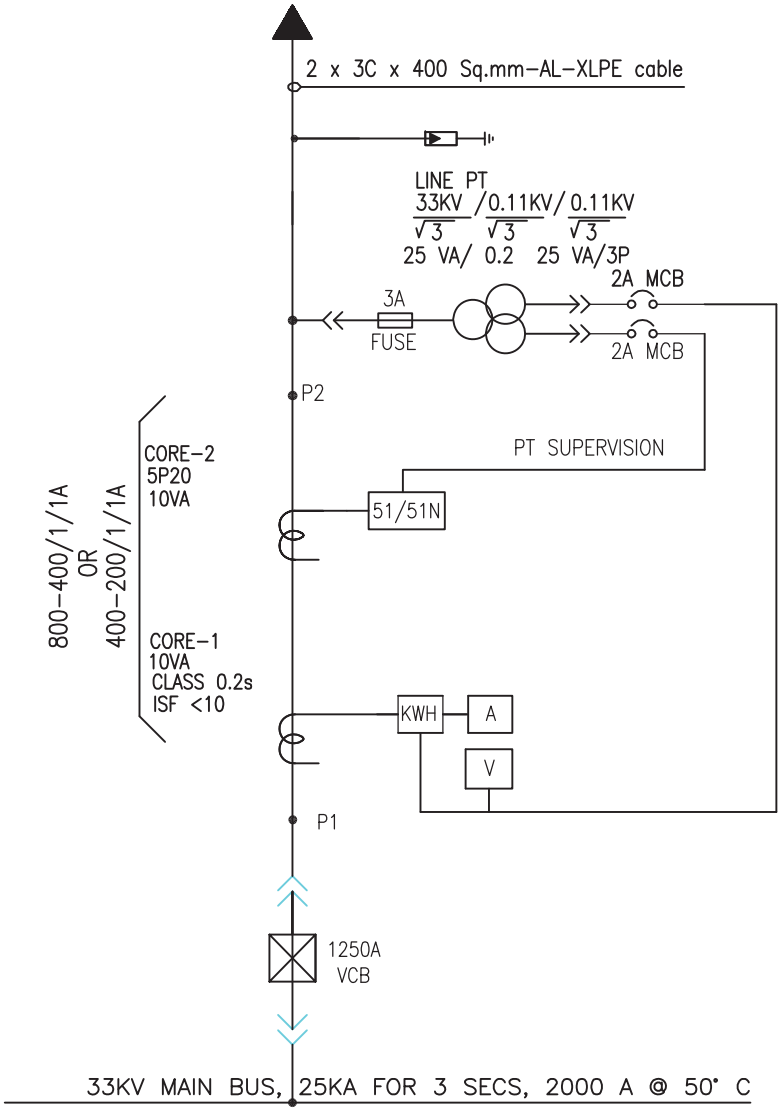

LEGEND

SYMBOL	DESCRIPTION
	11KV SF6/VACUUM CKT. BKR. DRAWOUT TYPE
	CURRENT TRANSFORMER
	POTENTIAL TRANSFORMER
	SURGE ARRESTOR
	FUSE
52X	BREAKER AUX CONTACT MULTIPLIER
74	TRIP CIRCUIT SUPERVISION RELAY
94	ANTI PUMPING RELAY
86	HIGH SPEED TRIP RELAY
V	VOLTMETER
A	AMMETER

SYMBOL	DESCRIPTION
KWH	ENERGY METER
46	NEGATIVE PHASE SEQUENCE PROTECTION
25	SYNC CHECK
51/51N	O/C & E/F RELAY
27	UNDER VOLTAGE RELAY
87	DIFFERENTIAL RELAY
21	DISTANCE RELAY
59	OVER VOLTAGE RELAY
64	REF RELAY
67/67N	DIRECTIONAL O/C & E/F RELAY
TTB	TEST TERMINAL BLOCK

NOTE:
1. KWH METER NOT IN SUPPLIER'S SCOPE
2. REFER CLAUSE 16 OF SPECIFICATION FOR DETAILED FUNCTIONAL REQUIREMENTS OF PROTECTION RELAYS
3. TTB NOT REQUIRED IN THIS PANEL

DRAWN	R.K/A.H H.K
CHECKED	S.G/A.S
APPD.	G.S/G.N
DATE	29.04.22
SCALE	NTS

TITLE

TYPICAL SLD FOR 33 KV OUTGOING FEEDER (FOR INSTALLATION AT KCC CONSUMERS PREMISES)

BSES

SPECIFICATION NO. BSES-TS-66-HTSWG-R0

SLD-SWG-33KV-04

DocUUID : 23f7dc1d-9724-406f-b48e-bdff68bb2c4f

ANNEXURE–F10

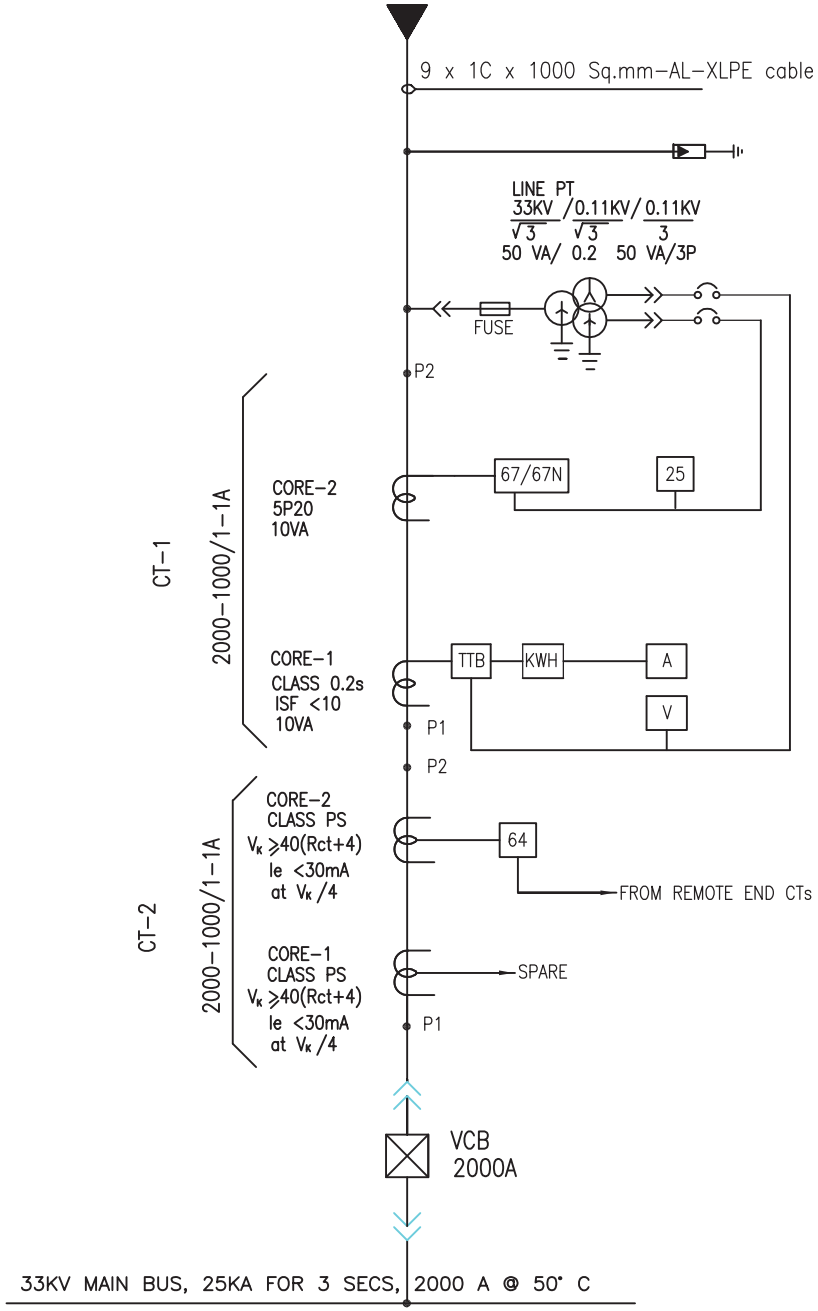

LEGEND

SYMBOL	DESCRIPTION
	11KV SF6/VACUUM CKT. BKR. DRAWOUT TYPE
	CURRENT TRANSFORMER
	POTENTIAL TRANSFORMER
	SURGE ARRESTOR
	FUSE
52X	BREAKER AUX CONTACT MULTIPLIER
74	TRIP CIRCUIT SUPERVISION RELAY
94	ANTI PUMPING RELAY
86	HIGH SPEED TRIP RELAY
V	VOLTMETER
A	AMMETER

SYMBOL	DESCRIPTION
KWH	ENERGY METER
46	NEGATIVE PHASE SEQUENCE PROTECTION
25	SYNC CHECK
51/51N	O/C & E/F RELAY
27	UNDER VOLTAGE RELAY
87	DIFFERENTIAL RELAY
21	DISTANCE RELAY
59	OVER VOLTAGE RELAY
64	REF RELAY
67/67N	DIRECTIONAL O/C & E/F RELAY
TTB	TEST TERMINAL BLOCK

NOTE: 1. KWH METER NOT IN SUPPLIER'S SCOPE
2. REFER CLAUSE 16 OF SPECIFICATION FOR DETAILED FUNCTIONAL REQUIREMENTS OF PROTECTION RELAYS

DRAWN	R.K/A.H H.K	TITLE: TYPICAL SLD FOR 33KV INCOMER FROM 66/33KV AUTO TRANSFORMER	BSES
CHECKED	S.G/A.S		SPECIFICATION NO. BSES-TS-66-HTSWG-R0
APPD.	G.S/G.N		SLD-SWG-33KV-05
DATE	29.04.22		
SCALE	NTS		

DocUUID : 23f7dc1d-9724-406f-b48e-bdff68bb2c4f

ANNEXURE–F11

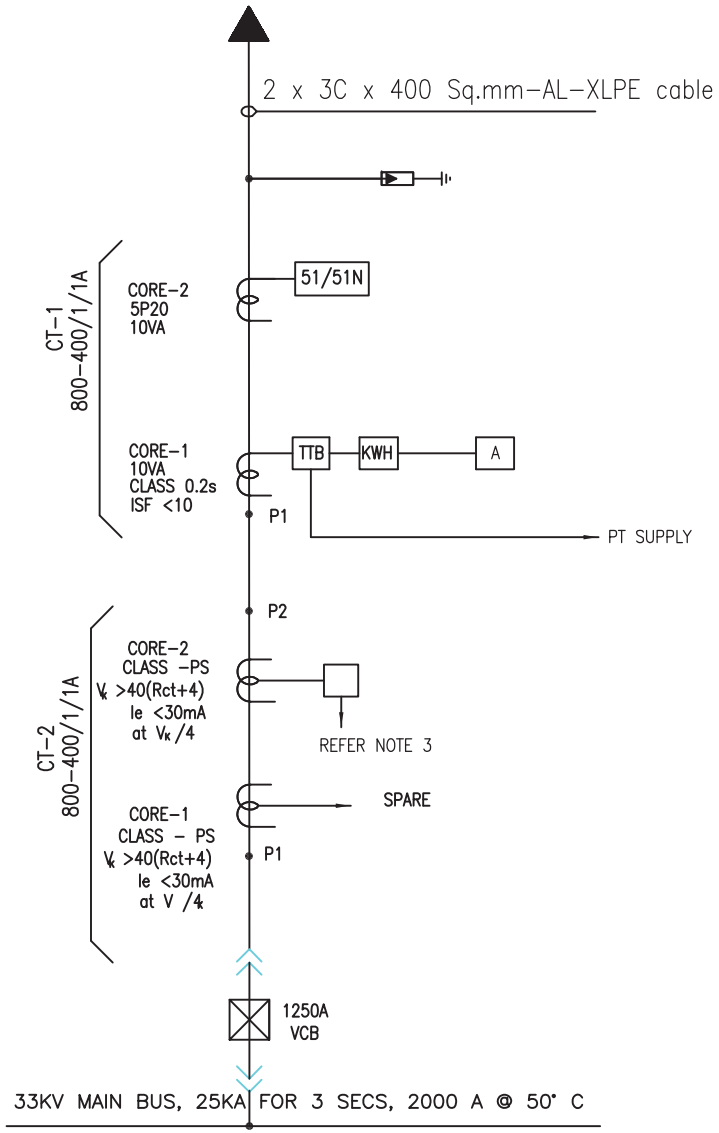

LEGEND

SYMBOL	DESCRIPTION
	11KV SF6/VACUUM CKT. BKR. DRAWOUT TYPE
	CURRENT TRANSFORMER
	POTENTIAL TRANSFORMER
	SURGE ARRESTOR
	FUSE
52X	BREAKER AUX CONTACT MULTIPLIER
74	TRIP CIRCUIT SUPERVISION RELAY
94	ANTI PUMPING RELAY
86	HIGH SPEED TRIP RELAY
V	VOLTMETER
A	AMMETER

SYMBOL	DESCRIPTION
KWH	ENERGY METER
46	NEGATIVE PHASE SEQUENCE PROTECTION
25	SYNC CHECK
51/51N	O/C & E/F RELAY
27	UNDER VOLTAGE RELAY
87	DIFFERENTIAL RELAY
21	DISTANCE RELAY
59	OVER VOLTAGE RELAY
64	REF RELAY
67/67N	DIRECTIONAL O/C & E/F RELAY
TTB	TEST TERMINAL BLOCK

NOTE:
1. KWH METER NOT IN SUPPLIER'S SCOPE
2. REFER CLAUSE 16 OF SPECIFICATION FOR DETAILED FUNCTIONAL REQUIREMENTS OF PROTECTION RELAYS
3. LINE DIFFERENTIAL OR DISTANCE RELAY. REFER CLAUSE 16.12.1 OF SPECIFICATION

DRAWN	R.K/A.H H.K
CHECKED	S.G/A.S
APPD.	G.S/G.N
DATE	29.04.22
SCALE	NTS

TITLE
TYPICAL SLD FOR 33KV OUTGOING FROM 66/33KV AUTO TRANSFORMER

BSES

SPECIFICATION NO. BSES-TS-66-HTSWG-R0

SLD-SWG-33KV-06

DocUUID : 23f7dc1d-9724-406f-b48e-bdff68bb2c4f

ANNEXURE–F12

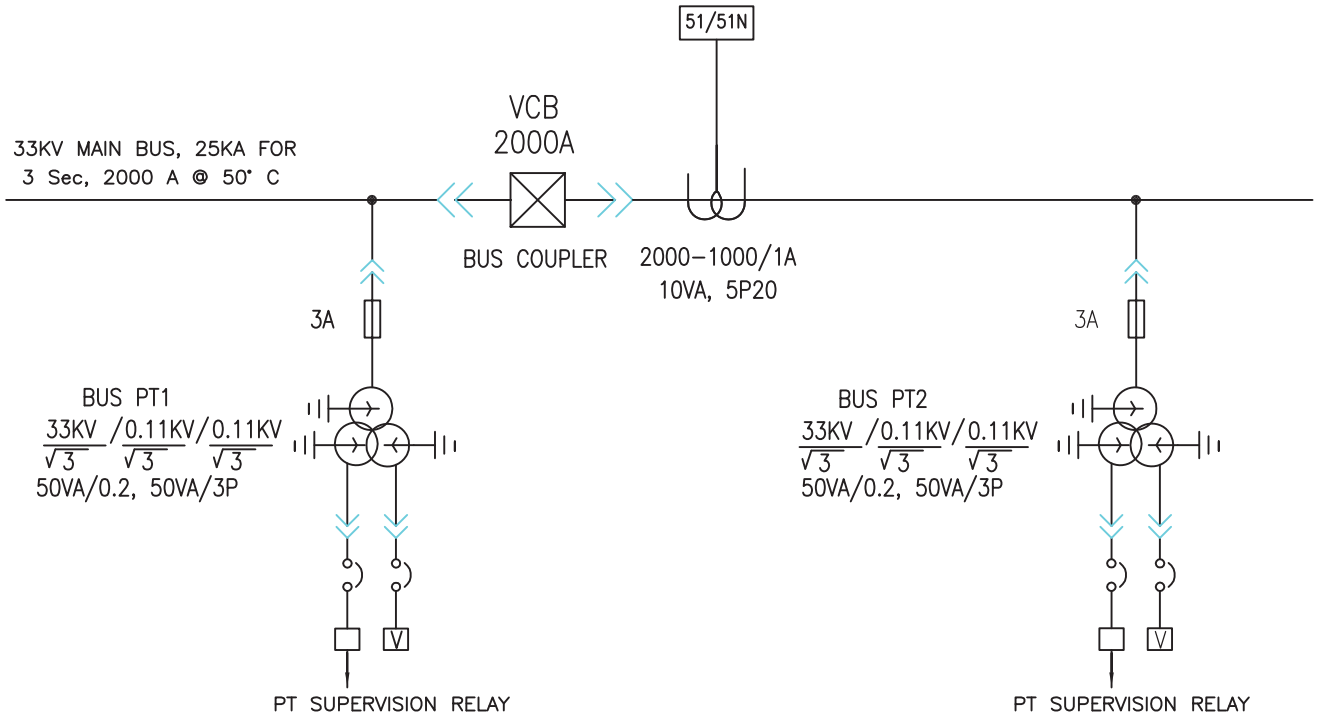

LEGEND

SYMBOL	DESCRIPTION
	11KV SF6/VACUUM CKT. BKR. DRAWOUT TYPE
	CURRENT TRANSFORMER
	POTENTIAL TRANSFORMER
	SURGE ARRESTOR
	FUSE
52X	BREAKER AUX CONTACT MULTIPLIER
74	TRIP CIRCUIT SUPERVISION RELAY
94	ANTI PUMPING RELAY
86	HIGH SPEED TRIP RELAY
V	VOLTMETER
A	AMMETER

SYMBOL	DESCRIPTION
KWH	ENERGY METER
46	NEGATIVE PHASE SEQUENCE PROTECTION
25	SYNC CHECK
51/51N	O/C & E/F RELAY
27	UNDER VOLTAGE RELAY
87	DIFFERENTIAL RELAY
21	DISTANCE RELAY
59	OVER VOLTAGE RELAY
64	REF RELAY
67/67N	DIRECTIONAL O/C & E/F RELAY
TTB	TEST TERMINAL BLOCK

NOTE:–

1. REFER CLAUSE 16 OF SPECIFICATION FOR DETAILED FUNCTIONAL REQUIREMENTS OF PROTECTION RELAYS

DRAWN	R.K/A.H H.K
CHECKED	S.G/A.S
APPD.	G.S/G.N
DATE	29.04.22
SCALE	NTS

TITLE

TYPICAL SLD FOR BUS COUPLER CUM BUS PT PANEL FOR 33KV SWITCH BOARD OF 66/33KV AUTO TRANSFORMER

BSES

SPECIFICATION NO. BSES-TS-66-HTSWG-R0

SLD-SWG-33KV-07

DocUUID : 23f7dc1d-9724-406f-b48e-bdff68bb2c4f

BSES Rajdhani Power Limited
BSES Bhawan, Nehru Place, New Delhi- 19

TECHNICAL SPECIFICATION

FOR

CABLE INSTALLATION & ACCESSORIES

Prepared by	Sonia Mittal	Mittal	Rev: 1
Reviewed by	Uttam Shukla	Shukla	Date: 19th Nov., 2025
Approved by	Deepti Sharma	Deepti	

Technical Specification for Cable Installation and Accessories

1.0 INSTALLATION OF CABLES:

1.1 The cable shall be laid as per IS 1255. The Contractor shall prepare cable schedules for all the cable circuits associated with the equipment in the substation showing length, size and routing of each cable which shall be given suitable code numbers and submit the same for Owner's/Engineer's information/approval. Cable and Conduit/Pipes laying shall be done strictly in accordance with the cable schedules.

1.2 The control and power cables shall be laid in Conduits/Pipes, concrete pipes, ducts, trays or cable trenches unless indicated otherwise. The power and control cables shall be laid in different trays. Cables shall be cleated to the cable tray after properly dressing.

1.3 Ducts shall be provided wherever cable trenches cross roads with provision of one spare duct for future use.

1.4 All civil works, viz, excavations, sand cover, providing brick cover on directly laid cables, construction of foundations, trenches with cable tray supports, cable ducts under roads, back filling, finishing associated with cabling work shall be duly completed.

1.5 The Contractor shall supply and install all the surface mounted/ embedded rigid and flexible conduits, their connections, and associated clamps, bushings, lock-nuts, caps etc required in the cabling work.

1.6 All Conduit/Pipes and their accessories shall be made of galvanized heavy gauge steel as per BIS Specification. The internal bore of all pipes shall be smooth and suitable for pulling PVC sheathed cables without damage.

1.7 The Contractor shall supply all fittings including ordinary tees and elbows, check nuts, male and female fittings pull boxes, junction boxes, conduit outlets, outlet boxes, splice boxes, terminal boxes, gaskets and box covers, saddles and all supporting steel work and all such arrangements which are required to complete the conduit installations.

1.8 Pre-fabricated junction boxes, conduit boxes and conduits shall be shop fabricated out of malleable iron or steel plates and shall be galvanized and provided with galvanized malleable iron or steel plate covers and rubber gaskets

1.9 All the apparatus, connections and cable work shall be designed and arranged to eliminate the risk of fire and minimize damage which might be caused in the event of fire. Wherever cables pass through floor or wall openings or other partitions, suitable bushes of approved type shall be supplied and put in position by the Contractor.

1.10 Standard cable grips, reels and rollers shall be utilized for cable pulling.

1.11 Each cable, whether power or control, shall be provided with a metallic or plastic tag of an approved type, bearing cable reference number indicated in the cable schedule prepared by the Contractor, at every 10 meter run and at both ends of the cable, adjacent to the

terminations as well as where cables enter or leave ducts. Cable routing shall be so done that cables are accessible for identification and maintenance easily, and are arranged neatly.

1.12 In no case the cables shall be bent sharply or kinked with the radius of bending falling below 15D where D is the overall diameter of the cable.

1.13 When power cables are laid in the proximity of communication cables, the minimum horizontal and vertical separation between power and communication cables shall be 600 mm. Wherever possible the power and communication cables shall be located as far from each other as possible. The power and communication cables shall cross each other at right angles.

1.14 Wherever cables cross roads, water, oil, sewage or steam-lines, special care shall be taken while designing the trenches/ducts for protection of the cables.

1.15 In each cable run, some extra length shall be provided at a suitable location to enable making of one or two straight-through joints for carrying out repairs if the cable develops fault at a later date.

1.16 Cable splices shall not be permitted except where called for as per the construction drawings, or where permitted by the Engineer. Straight-through joints in the run of cables wherever unavoidable shall be through joint-boxes.

1.17 The termination of cables at various equipments shall be carefully made in accordance with the manufacturer's instructions and detailed connection diagrams.

Termination materials for all cables shall match with the type of cable insulation and have thermal and electrical ratings and chemical properties similar to those of the associated cable.
All terminating materials except for those already supplied with the electrical equipment shall be provided by the Contractor.

1.18 Control cable terminations shall be made in accordance with the color code marked wiring diagrams of control circuits. Multi-conductor control cable jackets shall be removed as required to train and terminate the conductors. The cable jacket shall be left on the cable, to the extent possible. The insulated conductors from which the jacket is removed shall be neatly trained in bundles and terminated. The bundles shall be firmly, but not tightly, tied utilizing plastic or nylon ties or specially treated fungus-proof cord.

1.19 The connectors for control cables shall preferably terminate in Ross Courteny terminals and washers and be covered with transparent insulating sleeves so as to prevent accidental contact with ground or adjacent terminals. The insulating sleeves shall be fire resistant and shall be long enough to overlap the conductor insulation.

1.20 When control cables are to be fanned out and tied together with cord, the Contractor shall make connections to terminal blocks and test the equipment for proper operation before tying the cables together with cord.

1.21 Jointing of cables shall be made in accordance with the applicable Bureau of Indian Standards Code of practice, Owners approval and manufacturer's special instructions. The materials and tools required for cable jointing work shall be in the Contractor's scope.

1.22 The supply of joint boxes shall include all hardware fittings, compounds, tapes and other materials required for making the joints.

Special tools, clips and saddles, glands, seals, PVC sealing compound, locknut, etc, required for connection and termination of cables shall be in the Contractor's scope.

1.23 All cables shall be megger-tested before jointing. After jointing is completed all L.V cables shall be megger-tested.

Cable cores shall be tested for:

i. Continuity.
ii. Absence of cross phasing
iii. Insulation resistance to earth.
iv. Insulation resistance between conductors.

2.0 CABLE TRAYS, ACCESSORIES & TRAY SUPPORTS, CONDUITS, PIPES AND DUCTS

2.1 Cable trays shall be run either in concrete cable trench or overhead supported from building steel. The cable trays shall be ladder type for power cable and perforated type for Control cable. The trays shall be supplied with matching fittings and accessories.

2.2 Cable tray shall be fabricated out of rolled mild steel sheets free from flaws such as laminations, rolling marks, pitting etc. Minimum thickness of cable trays shall be 2.0mm.

2.3 Cables shall be clamped to the cable trays in the horizontal runs with 18 gauge GI wires. For vertical runs the cables shall be clamped with suitable site-fabricated clamps.

2.4 All cable trays including perforated sheet trays, weld mesh trays, vertical raceways shall be hot-dip galvanized and epoxy coated. The trays shall be of standard width of 150mm, 300mm, 450mm & 600mm and standard length of 2.5M. Trays upto 300mm shall be perforated type and above 300 mm shall be ladder type.

2.5 The conductors carrying AC and DC supplies shall not be bunched together in a conduit. Where single-core cables are individually drawn into separate pipes, HDPE pipes shall be used.

Technical Specification for Cable Installation and Accessories

2.6 Flexible metallic conduits shall be used for termination of connections to equipment to be disconnected at periodic intervals and also for termination of connections to level switches, limit switches, pressure switches etc.

2.7 In order to minimize condensation or sweating inside the conduit, all outlets of the conduit system shall be properly drained and ventilated so to prevent entry of insects and water as far as possible.

2.8 The conduits or pipes shall be run along walls, floor and ceilings, on steel supports, embedded in soil, floor, wall or foundation, in accordance with the relevant layout drawings, approved by the Owner.

2.9 All fittings in the conduit systems having threaded connections shall be tightened with full thread engagement and with a minimum of wrench work in order to avoid wrench outs.

2.10 Embedded conduits running parallel to a masonry surface shall, wherever possible, have a cover of at least 38 mm.

2.11 The conduits shall be lead into terminal boxes through the entry points provided by the equipment manufacturers unless otherwise shown in the drawings or unless otherwise directed by the Engineer.

2.12 While installing asbestos pipe or other fiber conduit, cracked pieces shall not be used. The sections cracked or broken during or after placement shall be replaced.

2.13 For underground conduit runs the Contractor shall excavate and backfill as necessary.

2.14 Exposed conduit shall be adequately supported by racks and clamps or straps or by other approved means.

2.15 Where conduits are stubbed out of masonry for future extension outside the structure, they shall be specially protected against corrosion and shall be boxed in against possible physical damage.

2.16 Each conduit run shall be marked with its designation as indicated on the drawings - 'Identification'.

2.17 Where conduit and boxes in locations of severe exposure require, painting of galvanized surfaces with Alkyd Resin Zinc Dust paint following by a finish coat of Aluminum paint, shall be performed by the Contractor in a good and approved manner.

2.18 The Contractor shall bond of metal pipes or conduits in which cables have been installed to the main earthing system.

2.19 The conduits and accessories shall be adequately protected against mechanical damage as well as corrosion.

3.0 TERMINATION AND STRIGHT THROUGH JOINTS

3.1 Termination and jointing kits for 11KV and 33/66 KV grade XLPE insulated Aluminum cables shall be proven design and make already been extensively used and type tested. Termination kit and jointing kits shall be pre moulded type, taped type or heat shrinkable. The joints and termination shall be tested as per IS 13573. The kit contents shall be of proven design and type tested. Kit contents shall be supplied from the same source as were used for type tested. The kit shall be complete with Aluminum solderless crimping cable lugs and ferrules as DIN standard

The termination kit make and specification shall be strictly as per approval of the Owner.

3.2 The straight through and termination kit shall be suitable to withstand the fault level for 11KV and 33/66KV system

4.0 CABLE GLANDS, LUGS & ACCESSORIES

4.1 The cable shall be terminated using double compression type cable glands. The cable glands shall confirm to BS 6121 and of robust construction capable of clamping the cables and armour firmly without injury to the insulation. The cable glands shall be made out of heavy duty brass machine finished and nickel chrome plated. The thickness of plating shall not be less than 10 micron. The rubber component shall be made out of neoprene and tested quality.

4.2 The trefoil clamps for single core cables shall be pressurized die cast Aluminum or fiber Glass or Nylon and shall include necessary fixing accessories such as GI bolts and nuts. Trefoil clamps shall have adequate mechanical strength to withstand the forces generated by short circuit current.

4.3 Cable End seal (As per BRPL approved make) shall be provided for all Control Cable and Power Cable (including outgoing HT panels) at all the points wherever cable entries in the control room building or between room to room. 30% Spare modules shall be provided along with centre core has to be provided. System shall take up variation margin of +/-3mm in diameter of Cable. For details refer specs.

5.0 DEVIATIONS

Deviation from this specification, if any, shall be clearly brought out in the offer. Unless owner explicitly accepts such deviations, it shall be considered that the offer fully complies with the specification.

BSES

Technical Specification

Of

Exhaust & Ventilation System including Air-conditioning

Specification no – BSES-TS-309-EXVEAIR-R0

Rev:		0
Date:		10 Oct 2025
Prepared by	Supriya Raina	
Reviewed by	Uttam Shukla	
Approved by	Deepti Sharma	

Technical Specification Exhaust and Ventilation System

1.0 INTENT OF SPECIFICATION

1.1 This specification is intended to cover the design, manufacture, assembly, testing at manufacturer's works, supply & delivery, properly packed for transport for site of Air Conditioning system and Ventilation system for substation control room building complete with all materials and accessories for efficient and trouble free operation

1.2 In the event of any discrepancy with the listed documents, the stipulation this specification shall govern.

2.0 SCOPE OF SUPPLY

The following equipment shall be furnished with all accessories.

a) Exhaust Fan system.
b) Air Conditioning
c) All necessary components for operation of the above equipment.
d) All wiring & accessories to complete the installation.
e) All relevant drawings, data & instruction manuals.
f) Mandatory spares.
g) Commissioning spares and recommended spare part list for three (3)

3.0 GENERAL REQUIREMENT

3.1 All equipment and material shall be designed, manufactured and tested in accordance with the latest applicable Indian Standards except where modified and/or supplemented by this specification.

3.2 Equipment and materials conforming to any other standard, which ensures equal or greater quality, may be accepted. In such case copies of the English version of the standard adopted shall be submitted along with the bid.

3.3 In particular, the following standards and specifications are applicable.

3.4 Air conditioners suitable for 230V, 50 Hz single phase AC supply shall be capable of performing the functions as cooling, dehumidifying, air circulating and filtering. The air conditioners shall be complete with automatic temperature control and cut-in and cutout etc. for temperature range 16 to 25 degree C.

3.5 Outdoor unit of the air conditioners shall be fitted discharge cooled type rotary Compressor.

3.6 Air Conditioner shall be 5 Star rated

3.7 Air Conditioning shall maintain 22 Degree Celsius in summers and Winters, Environment condition shall be referred from General Design Criteria Chapter 1

3.8 Approved make of AC is Voltas/LG/Carrier.

3.9 The minimum thickness of the base in outdoor unit shall be 1.20 mm & sheet thickness for rest of the body shall be 0.70 mm (Min.) with galvanized coating thickness of 120 g/ sq. m and shall be provided with stiffeners for robust construction and shall have rounded corners.

3.10 The casing of the indoor units shall be made of ABS/HIPS/GS and shall be impact resistant. The control box of indoor unit shall withstand flame retardant.

3.11 Remote cordless control with LCD/LED Display for Air conditioner shall be provided with one On/Off timer, selecting fan speed (three speed) and setting up of temperature. Display shall be provided on indoor unit or on handset or on both.

3.12 Maximum power consumption of the split air conditioners shall be measured at capacity rating test conditions. Overall power factor of the unit shall be at least 0.85 at capacity rating test conditions

This specification shall be read and constructed in conjunction with the bid documents and annexure to determine the scope of work.

DESIGN CRITERIA

	Air Conditioning shall be supplied in Control Room and Switchgear Room including GIS Room, maintenance room and SCADA room. Exhaust system shall be supplied in following rooms -Toilet – one Pantry- One Cable Celler- Industrial type numbers shall be as per calculation
Number and details of wall mounted/Ceiling fan	Battery room – 1 No Control room – 3 No's Switchgear Room – 6 No's GIS Room-As per Calculation, 6 Nos(Minimum). **Note: Wall mounted fan shall be industrial type, domestic fans shall not be acceptable**
Power Point & socket	Each room shall be provided with at least 2 No's 15 Ampere Switch socket and 2 no's 5 ampere switch sockets. Two no's industrial 16 ampere points shall be provided in control room for installation of air conditioning system for future.

	All equipment, accessories and wiring shall have fungus protection, involving special treatment of insulation and metal against fungus, insects and corrosion.

4.0 DEVIATIONS

Deviation from this specification, if any, shall be clearly brought out in the offer. Unless owner explicitly accepts such deviations, it shall be considered that the offer fully complies with the specification.

BSES

Technical Specification

Of

Fire Extinguisher

Specification no – BSES-TS-313- FIREX-R0

Rev:		0
Date:		19 Nov 2025
Prepared by	Alok Mandal	
Reviewed by	Uttam Shukla	
Approved by	Deepti Sharma	

Technical Specification Fire Extinguisher

1.0 INTENT OF SPECIFICATION:

This specification is intended to cover the design, manufacture, assembly, testing at manufacturer's works, supply & delivery, properly packed for transport FOR site of Portable wall and trolley mounted Fire extinguisher and fire buckets for substation control room building complete with all materials and accessories for efficient and trouble free operation.

In the even of any discrepancy with the listed documents, the stipulation of this specification shall govern.

2.0 SCOPE OF WORK

2.1 Scope of Supply

The following equipment shall be furnished with all accessories:-

a) Wall mounted fire extinguisher-15 Nos. of 4.5kG (CO_2 Type)
b) Trolley mounted fire extinguisher- 5 Nos. of 22.5kg (CO_2 Type)
c) Sand buckets with stand- 4 Set with 4 bucket in each stand
d) All installation hardware.
e) All relevant drawings, data & instruction manuals.
f) Mandatory spares.
g) Commissioning spares and recommended spare part list for three (3) years of operation.
h) Rubber Mat for entire Indoor equipments front and backside(as per latest IS)

3.0 GENERAL REQUIREMENT

3.1 Codes and Standard

All equipment and material shall be designed, manufactured and tested in accordance with the latest applicable Indian Standards except where modified and/or supplemented by this specification.

Equipment and materials conforming to any other standard which ensures equal or greater quality may be accepted. In such case copies of the English version of the standard adopted shall be submitted along with the bid.

In particular, the following standards and specifications are applicable.

Indian Electricity Rules	Relevant safety regulation of CEA
Indian electricity act	
IS 2190	Selection, installation & maintenance of first aid, fire extinguisher.
	Tariff Advisory Committee Manual
IS 1646	Code for practice for fire safety of buildings
IS 940	Portable fire extinguisher, Water type - specification
IS 2878	Fire extinguisher CO2 type
IS 2171	Specification for fire extinguisher dry powder.
IS 10204	Specification for fire extinguisher Mechanical foam type.

This specification shall be read and constructed in conjunction with the bid documents and annexure to determine the scope of work.

4.0 DESIGN CRITERIA

General	The contractor shall supply the required type and quantities of fire extinguisher and Sand buckets. The quantity shall be as per TAC recommendations.
Location	Fire extinguisher and sand buckets shall be installed in Control room, battery room, switchgear room, ACDB & battery charger room, Cable cellar, Transformer yard, Outdoor switchyard and Capacitor bank.
Distribution	The fire extinguishers in various locations shall be as per the guidelines of TAC-India.
Tests	All equipment shall be completely assembled wired, adjusted and routine tested at the factory as per relevant standards.

5.0 DEVIATIONS

Deviation from this specification, if any, shall be clearly brought out in the offer. Unless owner explicitly accepts such deviations, it shall be considered that the offer fully complies with the specification.

BSES

Technical Specification

Of

Fire Suppression System

Specification no – BSES-TS-314-FIRSP-R0

Rev:		1
Date:		19 Nov 2025
Prepared by	Alok Mandal	
Reviewed by	Uttam Shukla	
Approved by	Deepti Sharma	

Index

1.0 Scope
2.0 Code and Standards
3.0 Service Conditions
4.0 General Requirement
5.0 System Design
6.0 Installation, Testing and Commissioning
7.0 Maintenance
8.0 Drawing and Data submission
9.0 Shipping
10.0 Handling and Storage
11.0 Quality
12.0 Deviation
13.0 Testing and Inspection
14.0 Training

1.0. SCOPE:

Switchgear Panel Fire Suppression System: This includes Supply, Installation, Testing and Commissioning of Suppression system.

2.0. CODE AND STANDARDS:

This specification shall be governed by following standards/rules & regulations with all amendments unless otherwise specified in this specification.

S.No.	Standard Name / No	Standard's Description
1	AS 1670.1, AS1603.8, ASNZS 3000	Latest Edition
2	Indian electricity act 2013	Latest Edition
3	Fire Industry Association (FIA), Code of Practice for Design, Installation, Commissioning and Maintenance of Aspirating Smoke Detector (ASD) Systems	Latest Edition
4	NFPA Standards	2001 (2015 Edition)
5	NEC Standards, US	Latest Edition
6	NZS 4512	2003
7	Residential Fire and Burglary:– Household Fire Warning System Units – ANSI/UL 985, 2000/05/26 (5th edition) with revisions up to2004/04/29	Latest Edition
8	IS-875	Latest Edition
9	Local Fire Authority	Delhi
10	National Building Code	Part 4 Fire and life safety 2016

3.0. SERVICE CONDITIONS:

S.No	Particulars	Data
1	Design Ambient temperature	0°C to 50 °C
2	Seismic Condition	Zone IV as per IS 1893
3	Wind Pressure	195 kg/M² upto elevation of 30 M as per IS 875
4	Maximum Relative Humidity	100%
5	Maximum Altitude above Sea level	1000M

6	Rainfall	750mm (concentrated in 4 months)
7	Pollution level	Heavy/Dry
8	Average of no thunderstorm days	40 per annum

4.0. Scope of Work:

a. Supply, Installation, Testing and Commissioning of clean Agent Novec 1230/equivalent Fire Suppression system designed to provide a uniform concentration within the electrical panels in accordance with NFPA 2001 and requirements of the contract documents.

b. Provide all engineering design and materials for a complete agent suppression system including Novec 1230/equivalent storage cylinders with steel bracket, extinguishing agent, detection tube, cylinder valve and associated accessories including but not limit to; adaptors, pressure switch, Fire Detection tube fittings etc, required for complete operation of system.

c. All necessary safety requirements such as warning signs, discharge alarm shall be part of system.

d. The necessary nomenclature such as pressurization level, agent volume, and gross/net weight of cylinder shall be clearly marked on cylinder.

e. Prior to supply of material at site. Contractor must submit following documents for approval of Engineer-in-charge.

f. Drawing in A-4 size, clearly showing the panel, routing of tube inside the panel, location and fixing arrangement of cylinder & system components.

5.0 System Description:

a) The detection tube shall be fixed with cylinder valve at top of cylinder. The tube shall be pressurized with dry nitrogen at 16 bars. In case of fire and on reaching of pre-determined temperature, the tube shall rupture and gas shall be released from tube/ discharge nozzle over the protected area.

b) The pressure switch shall be provided for necessary indication of discharge of gas.

c) The Extinguishing Agent shall be stored in cylinder as liquefied compressed gas, super pressurized with dry nitrogen at 195 psi minimum

d) The cylinder shall be equipped with brass valve, pressure gauge (to monitor agent pressure) and isolation valve for maintenance purposes. The cylinder bracket shall be of steel construction with quick release clamp.

e) The detection tube shall be installed throughout the compartments of panel. The location and spacing of tube shall be above the hazard, to be protected.

f) In case of ILP System Nozzles shall be placed properly over the protected area.

g) With system activation, a signal should be generated via Audio Visual Alarm installed at convenient location as per Engineer-in-Charge.

6.0 System Components:

The bidder shall provide an under taking from Principle Manufacturer of product they intent to install, that manufacturer will fully support the bidder for this specific project.

a) Cylinder of steel construction with standard red epoxy paint finish. Cylinders shall be accompanied by original manufacturers test certificate confirming the contents of the cylinder.

b) The cylinders shall be from reputed Manufacturers only. Cylinders shall be super pressurized with dry nitrogen to an operating pressure and temperature as per manufacturer recommendations.

c) Each cylinder shall have pressure gauge and low pressure switch to provide visual and electrical supervision of the cylinder pressure. The low pressure switch shall be wired to the Audio Visual Alarm to provide audible and visual trouble alarm in the event of drop of pressure. The pressure gauge shall be color coded to provide an easy, visual indication of cylinder pressure.

d) Furnish a welded steel bracket with each cylinder assembly for holding the cylinders in a saddle with a front bracket piece that secures the cylinders.

e) The Detection Tube, should be UL approved, UL approval marking, Red Color.

f) The Pressure Switch should be UL Listed/CE Marked having NO/NC contact.

g) DLP/ILP Valves should be CE/ISO/EN approved and π marked.

h) All the Power and Control Cables shall be FRLS type.

i) System shall give signals to SCADA on through communication port.

MANDATORY APPROVALS/CERTIFICATES SHALL BE REQUIRED

1. Authorization letter from Principal OEM of System
2. Authorization Letter from OEM of Clean Agent(UL/FM).
3. Pneumatic Heat Sensing Tube- UL Listed and marked
4. Valve shall be π marked
5. Pressure Switch Assembly: UL/CE approved
6. UL Approved filling station.

7.0. MAINTENANCE

Bidder shall furnish a maintenance manual and support maintenance activity.

8.0. DRAWING AND DATA SUBMISSION

8.1	Submissions along with the bid	
8.1.1	Duly filled GTP and copy of specification	2 copies + 1 soft copy

9.0. SHIPPING

9.1	Shipping	The bidder shall ascertain at an early date and definitely before the commencement of

		manufacture, any transport limitations such as weights, dimensions, road culverts, Overhead lines, free access etc. from the Manufacturing plant to the project site. Bidder shall furnish the confirmation that the proposed Packages can be safely transported, as normal or oversize packages, up to the site. Any modifications required in the infrastructure and cost thereof in this connection shall be brought to the notice of the Purchaser.
		The Bidder shall be responsible for all transit damage due to improper packing.

10.0. HANDLING AND STORAGE

10.0	Handling and Storage	Manufacturer instruction shall be followed. Detail handling & storage instruction sheet / manual needs to be furnished before commencement of supply.

11.0. QUALITY & INSPECTION

11.1	Vendor quality plan	To be submitted for purchaser approval
11.2	Testing & Inspection	As per relevant standards

12.0 Warranty

Warranty shall be 5 Years Minimum. Vendor shall provide free maintenance during warranty period.

Following activities shall be included during period of warranty.

1. one visit by service engineer for general check up -- once in a six month time on each location.
2. Functionality test of the entire system -- once in one year time on each Location.

3. Mandatory Spares shall be provided for upkeeping of system for the period of 5 Years.

13.0 DEVIATION

13.1	Deviation	Deviations from this Specification shall be stated in writing with the tender by reference to the Specification clause/GTP/Drawing and a description of the alternative offer. In absence of such a statement, it will be assumed that the bidder complies fully with this specification. No deviation will be acceptable post order.

14.0 TRAINING

Training on installation, commissioning, operation and maintenance shall be included in the quotation.

- At site after installation- 1 Manday

BSES

Technical Specification

Of

Closed Circuit Television (CCTV) Video Surveillance System

Specification no – BSES-TS-310-VCCTV-R3

Rev:		3
Date:		10 Oct 2025
Prepared by	Alok Mandal	
Reviewed by	Uttam Shukla	
Approved by	Deepti Sharma	

Contents

1.0 SCOPE 3
2.0 CODES AND STANDARDS 3
3.0 CYBER SECURITY 4
4.0 SCOPE OF SUPPLY ITEMS 6
5.0 SCOPE OF SERVICE 9
6.0 TESTS 10
7.0 COMPLETENESS OF EQUIPMENT 10
8.0 PACKINGS 10

1.0 SCOPE

- Design, Engineering, Procurement of bought out items, manufacture, integration, inspection, factory testing and supply of complete CCTV System for the entire plant/grid/ss as per requisition consisting of following including necessary hardware, software and accessories as applicable.

2.0 CODES AND STANDARDS

Sl no.	Heading	Function Description
2.1	IS:1248, Part 1- 1993	Direct acting indicating analogue electrical measuring instruments and their accessories.
2.2	IEC:60688	Electrical measuring transducers.
2.3	IS:3231, Part 1- 1986 Part 2 &3 -1987	Electrical relays for power system protection.
2.4	IS:12729	Routine tests.
2.5	IEEE: 908-2018	Standard Guide for Safety in Substations.
2.6	IS:9000 Part 1 -1988	Basic environmental testing procedures for electronics & electrical items.
2.7	IEC:60255 / IEC61000	Specification for electrical relays. Measuring relays and protection equipment.
2.8	IEE:C37.24-2018	Standard for Power System Relaying terms and definitions.
2.9	IEEE:C37.90-2005	All Protection Trip Relays.
2.10	IEEE:C37.112-2010	Guide for relay application in power systems.
2.11	IS:9000 part1-1998	Basic environmental testing procedures for electronics & electrical items.
2.12	IEEE:80	Guide for Safety in AC Substation Design.
2.13	IS:13703 - 1993	Low voltage fuses for voltages not exceeding 1000V AC or 1500V DC.
2.14	IEC:60629	Low Voltage fuses.
2.15	IEC:60282	High Voltage fuses.
2.16	IS:9244(part3) / IS:13703	HRC fuses.
2.17	IS:694	PVC insulated cables for working voltages upto and including 1100V.
2.18	IS:722	AC Electricity meters.
2.19	IEC:61850	Communication Networks and Systems in substations.
2.20	IEC:60529	Degrees of Protection provided by Enclosures.

2.21	IS:2982	Copper conductor in insulated cables.
2.22	IS:3961 (part1-part5)	Current rating for cables.
2.23	IS:5831	PVC insulating and sheath of electrical cables.
2.24	IS:375	Auxiliary wirings.
2.25	IS:1248	Indicating instruments and other applicable standards.
2.26	IEC:62351	Cyber Security type tests of IEDs/Numerical relays/Gateways/Transformer Tap controllers/Changers, etc with IEC 61850, IEC101, IEC103, IEC104 communication protocol network systems.
2.27	IEC:27036 IEC:20243 IEC:62443	Supply Electrical Devices from outside India, type tests for communications, cyber security conformance tests.
2.28	IEC:60973	OFC used for various equipments & panels located in AC/DC Switchyards, Control rooms, valve halls to transmit the required signals for integration, control, monitor, etc.

3.0 CYBER SECURITY

Sl no	Heading	Function description
3.1	Reference Standards	IEC:61850 – 5 to 10, IEC:27036, IEC:20243, IEC:62443, IEC:62351 and other relevant standards of IS/IEC/ANSI/IEEE,etc must be incorporated and Rules & Standards of Govt. of India, Ministry of Power/Other Central, State Departments & International best practice on Cyber security in Electrical Power Systems.
3.2	Policy	The documented type test & conformance valid parameters for a set of business rules and process for protecting information, computer resources, networks, devices, electrical/electronic programmable devices, software's, industrial control systems and other Information Technology (IT) / Operation Technology (OT) systems shall be used to protect a sensitive & critical infrastructure of Electrical Power generation, transmission, distribution in protections, control operations, measurements, monitoring purposes.
3.3	Cyber Security Threats, Violations, Incidents, Unauthorized access on Power System ITs/OTs.	Cyber security violation/incident occurs by unauthorized or illegitimate accessor a person, group of persons, entity, of data, applications, services, networks and/or devices through bypass of the underlying cyber security protocols, policies and mechanisms resulting in the compromise of the confidentiality, integrity or availability of data/information maintained in a computer resource,

		protection equipment's, protection devices, sensors, meter devices, mechanism, automation, RTUs, PLCs, SCADA and other connected within respective electrical utilities & organizations.
3.4	Cyber Security systems	The cyber security of electrical power systems/ networks shall be available to protect the security, integrity and reliability. The protection of IED's/other Electric/Electronic devices information (or data's) against unauthorized or destruction whether accidental or intentional.
3.5	Critical Assets	The critical assets shall be of system, equipments and facilities which, if destroyed, degraded or otherwise declared unavailable, would affect the reliability or operability of the electrical power system.
3.6	Type test reports IEC:62443, IEC:62351 (India made devices)	The IEDs, RTU, FRTUs, PLCs, SCADA, Communication network switches, any related programmable software's/hardware's, etc systems that involved in electrical power sector for control & monitoring critical information shall be verified for a sample size for testing minimum one number from each make, type and having same firmware version for the supply one lot size of 200 numbers or less.
3.7	Type test reports IEC:62443, IEC:62351 (India made devices)	The Smart meters, other energy meters the sample six for testing shall be minimum one number for each make, type and have same firmware version for the supply one lot size of 5000 numbers or less.
3.8	Type test reports IEC:27036 IEC:62443 IEC:62351 IEC:20243 (Other country made devices)	The IEDs, RTU, FRTUs, PLCs, SCADA, Meters, Communication network switches, any related programmable software's/hardware's, etc systems that involved in electrical power sector for control & monitoring critical information for importing products/system shall be verified for a sample size 5% of the supply lot for each make, type and having same firmware version for the supply lot.
3.9	Protection & Control devices, Network & Programmable devices of substation equipment's	The IEDs, Communication Networks related devices, Software's, Hardware's in relation of critical electrical equipment which ever transfer data files, control & monitoring data files within power sector, state utilities for reliable power sector, which is a strategic & critical sector.
3.10	RTU domain cyber security terms & conditions	As the RTU/SCADA system will use public domain, such as LAN/VSAT/GPRS/CDMA/SATELLITE Based networks for communication media, therefore it is mandatory to guard the data / equipment from intrusion/damage/breach of security & shall have SSL/VPN based security.
3.11	IED'S like Protection devices, Control devices.	Communication protocol conformance standards shall be followed as per IEC 61850-5 to IEC 61850-10 and respective clauses.

3.12	RTUs,FRTUs,SCADA, PLC, etc with IEC communications.	Communication protocol conformance standards shall be followed as per IEC:60870-5-101/ IEC:60870-5-103/ IEC: 60870-5-104 and respective clauses.
3.13		Protocol Security conformance standards shall be followed as per IEC:60870-7, IEC:62351-100 part1&3 and respective clauses.
3.14	Smart meters with IEC 62056	Protocol Security conformance & Communication protocol conformance standards shall be followed as per IS:15959 series, IS:16444 series and respective clauses.
3.15	Mandatory tests case	The test is referencing a clause that is mandatory in IEC: TS 62351-5, IEC: TS 60870-5, IEC: 62351-3 which defines the requirements related to the authentication/encryption protocol, procedures and methods to be implemented at Fiber, TCP/IP(transport) level, Modbus,etc.
3.16	Approved/ Designated Laboratories	Central Power Research Institute (CPRI) approved laboratory for IEDs, RTU, FRTUs, SCADA, PLC systems. Central Power Research Institute (CPRI) Electrical Research & Development Association (ERDA), Yadav Measurements Pvt Ltd(YMPL) for Smart meter devices. If any other departments if approved shall be as per Ministry of Power/Other related departments for confirmation of Cyber security in power systems. If any changes according to Govt.rules/notifications/MoP,etc the same shall be incorporated time to time without cost implications.
3.17	Miscellaneous	Words and expressions used and not identified in these above regulations but defined in the information technology Act 2000 and the Electricity Act, 2003 shall be followed for cyber security of power system time to time.
3.18	Certificates Validity	Product certifications/type test reports of any Electrical/Electronic devices connected in power systems for respective protection/functions/controls/monitoring shall not be older than 5 years during supply of same items.
3.19	Reports	All necessary type test reports, certifications shall be submitted for RTU panel/ Equipments at Pre Bid / Engineering/ Inspection by supplier/vendor.
3.20	RTU Processor	RTU Processor with enhanced cyber security features, SNMPv3, https, SSL and TLS based encryption for 104 communications and shall comply with IEC 62351-3, IEC 62443-4-1, IEC62443-4-2 std for cyber security requirements for Industrial OT system.

4.0 SCOPE OF SUPPLY ITEMS

Sl no.	Function Description
4.1	**CCTV Camera**

4.2	**CCTV cameras suitable for remote operation with all necessary accessories and installation hardware consisting of but not limited to the following:**
4.2.1	High speed zoom lens.
4.2.2	360º camera
4.2.3	Automatic Iris
4.2.4	Pan & Tilt Unit
4.2.5	Receiver Unit
4.2.6	Weather proof junction box
4.2.7	Weather proof housing for unit camera.
4.2.8	Glass dome with reflector shield on outside.
4.2.9	Night vision.
4.2.10	One set of 360º camera shall be installed before start of work.
4.2.11	Application for monitoring of VMS (License for 2 year)
4.2.12	Analytics enabled for Local support (LMS) which should cover intrusion detection, Fire alarm, vehicle tracking, FRS, etc.
4.3	**System Cabinet consisting of following:**
4.3.1	Video encoder, network switches, etc.
4.3.2	Central control unit with all control functions like pan, tilt, focus and consisting of switching unit.
4.3.3	Video motion detection system.
4.3.4	Video recorder to record video images.
4.3.5	Buzzer for alert/alarm.
4.4	2 Nos 21” FULL HD, LED Monitor with HDMI interface to CPU with keyboard, optical mouse for monitoring at MAIN CONTROL ROOM & SECURITY ROOM.
4.5	Monitoring unit also including programming unit consisting of programming Monitor LED 21”, Keyboard and optical mouse, independent of monitoring unit with all required hardware and software for CCTV functioning.
4.6	All furniture required in the MAIN CONTROL ROOM & SECURITY ROOM, to mount the CCTV equipment like TV, PC-CPU, Server, Keyboard, Mouse, DVR, etc.
4.7	All types of cables (Video, Control/data, Optic Fiber and Power supply, etc) cable glands, plugs, connectors and accessories for interconnection of all the equipments supplied by vendor.
4.8	Junction boxes, Power distribution boxes, repeaters, cable glands, etc. as necessary.

4.9	Mounting poles for mounting the camera along with a climbing ladder.
4.10	The Ladder to be provided with wheels & brakes for easy movement on roads.
4.11	HDPE pipe with required pipe fittings for laying optical fiber cables between CCTV cameras in MAIN CONTROL ROOM &MAIN CONTROL ROOM TO SECURITY ROOM (gate/ security house).
4.12	Cable trays for CCTV cables within control rooms with required accessories in case required at site. Cable trays outside control room (where main cable duct is not available) Buried cable trench for cabling along the boundary walls.
4.13	All necessary supports for installation of all items supplied by vendor.
4.14	All mounting accessories required to mount various items supplied by vendor.
4.15	Earthing material required for earthing of CCTV equipment installed by vendor.
4.16	Necessary base frame support for mounting CCTV cabinets in MAIN CONTROL ROOM.
4.17	Any other item necessary but not specially listed for successful operation of CCTV system.
4.18	Packing, forwarding, transportation and storage at site of complete CCTV system and accessories.
4.19	Supply of special instrument or tools needed for testing, calibration and maintenance offered CCTV system.
4.20	Supply of consumables and commissioning spares as per requisition for CCTV system.
4.21	Any other item or/and activity not listed/indicated specifically but necessary for success operation of CCTV system.
4.22	CCTV monitoring of the site & image capture in case of an intrusion.
4.23	Future hardware expansion facility.
4.24	The CCTV system shall be supporting high resolution viewing & recording.
4.25	The images shall be transferred to a central location or on Mobile using internet connectivity.
4.26	The Video Surveillance System shall be CE & FCC certified and also STQC approved camera should be deployed as per OT Grid norms of BSES.
4.27	Complete Video Surveillance System shall be from the same manufacturer.
4.28	The Video Surveillance System should be design to work on Low Bandwidth WAN with following considerations
4.28.1	Camera stream: H 265
4.28.2	Camera resolution: 4CIF (704x480)
4.28.3	Video quality: Medium
4.28.4	Number of cameras: 01
4.28.5	Frame rate per camera at site: 25FPS
4.28.6	Frame rate per camera at center: 15FPS
4.28.7	Recording type: Continuous 24 Hours per day.
4.28.8	Desired Days of storage per camera: min.30 days.

All cameras should support dual stream and configured in such a way that one stream should provide feed to central control center and other stream should be capable to support edge

recording (memory card on camera or NVR). Video Surveillance System should be intelligent to monitor WAN and whenever there is outage or central control center not reachable camera should start recording on memory card or NVR present on camera and capable to restore the data to the central system in the missing area.

5.0 SCOPE OF SERVICE

Sl no.	Function Description
5.1	Installation, Integration of complete CCTV – Video Surveillance System and associated accessories including calibration, cabling, junction boxes, power supply, distribution boxes, etc.
5.2	Installation of CCTV cameras. The cameras to be mounted on top of Pole, so as no blind spot are created due to pole.
5.3	Installation of CCTV monitor for monitors located in MAIN CONTROL ROOM and monitors located in SECURITY CONTROL ROOM (gate/security house)
5.4	Installation of monitor located in MCR and Security Control room.
5.5	Installation of CCTV cabinets for various units.
5.6	Installation of programming unit PC.
5.7	Installation of various junction boxes (signal, power, control) supplied by vendor.
5.8	Laying of co-axial / optical fiber cable between CCTV Camera & Control Console Cabinets.
5.9	Laying of power cable between CCTV Cameras and CCTV Cabinet in MCR.
5.10	Laying of CCTV Cables (video, control, data, power).
5.11	Laying of CCTV Fiber Optic Cables between MCR and Security Control Room.
5.12	Termination, ferruling and glanding at both ends and interconnection of various cables (video, optical, control, power) supplied by vendor for complete CCTV system.
5.13	Distribution of power supply and reduction to required levels to various CCTV equipment supplied by vendor.
5.14	Integration of CCTV Camera with BSES-BRPL/BYPL Network.
5.15	**The entire IP Surveillance System to be designed to control and monitor the location provided based on the following considerations:**
5.15.1	Camera to be of 4 MP (all to be integrated in the VMS present and future).
5.15.2	CCTV System should be design to work on WAN with at lower bandwidth as low as (256 KBPS per Camera). Objects or persons should be identified under low bandwidth Scenario.
5.15.3	Bandwidth should be configurable.
5.15.4	System should be design to work and record on 15 FPS and 1 MP centrally.
5.15.5	System should be design with event based and continuous recording as and when required.
5.16	**Four types of cameras shall be considered to monitor the movement of the people as follows:**

5.16.1	Indoor
5.16.2	Outdoor
5.16.3	PTZ
5.16.4	360º Outdoor
5.17	All cameras shall be True Day/Night function IP Camera.
5.18	Analytics to be inbuilt at camera side like – Face capture, Trip Wire, Counter, Object removal, Motion detection.
5.19	All cabling including LAN network will be in scope of vendor in case of open through ISI Mark PVT / GI pipes or concealed through ISI Mark PVT / HDPE pipe.
5.20	L2 POE Cisco switches should be used to power-up the camera in case of 4 or more at a location else power adapter to be used to power up the cameras.
5.21	Servers should be either HP / IBM.
5.22	Servers should be planned in redundancy.

6.0 TESTS

All equipment with their terminal connectors, and other hardware etc., shall conform to type tests and shall be subjected to routine and acceptance tests in accordance with Latest Relevant IS .

7.0 COMPLETENESS OF EQUIPMENT

Any fittings, accessories or apparatus which may not have been specifically mentioned in this specification but which are usually necessary for the satisfactory operation of the equipment, shall be deemed to have been included in this specification.

8.0 PACKINGS

All material shall be suitably packed for transport, direct to site and Manufacturer shall be responsible for all damages/losses due to improper packing. All boxes shall be marked with signs indicating the up and down sides of the boxes along with the unpacking instructions, if considered necessary by the Manufacturers.

BSES

Technical Specification

Of

Fire Detection & Alarm System

Specification no – BSES-TS-315-FIRDA-R0

Rev:		0
Date:		19 Nov 2025
Prepared by	Alok Mandal	
Reviewed by	Uttam Shukla	
Approved by	Deepti Sharma	

Technical Specification Fire Detection and Alarm System

1.0 INTENT OF SPECIFICATION:

This specification is intended to cover the design, manufacture, assembly, testing at manufacturer's works, supply & delivery, properly packed for transport FOR site of Fire and smoke Detection & Alarm System for substation control room building complete with all materials and accessories for efficient and trouble free operation.

In the even of any discrepancy with the listed documents, the stipulation of this specification shall govern.

2.0 SCOPE OF WORK

2.1 Scope of Supply

The following equipment shall be furnished with all accessories :-

a) Smoke and heat detectors and installation.
b) Manual call point for the substation building.
c) Fire detection alarm panels which shall be SCADA compatible along with its integration with SCADA.
d) All wiring & accessories to complete the installation.
e) All installation hardware.
f) All relevant drawings, data & instruction manuals.

3.0 GENERAL REQUIREMENT

3.1 Codes and Standard

All equipment and material shall be designed, manufactured and tested in accordance with the latest applicable Indian Standards except where modified and/or supplemented by this specification.

Equipment and materials conforming to any other standard which ensures equal or greater quality may be accepted. In such case copies of the English version of the standard adopted shall be submitted along with the bid.

In particular, the following standards and specifications are applicable.

Indian Electricity Rules	Relevant safety regulation of CEA
Indian electricity act	
CBIP manual	
IS 2189	Code of practice for selection, installation & maintenance of automatic fire alarm system.
IS 2190	Selection, installation & maintenance of first aid, fire extinguisher.
IS 1646	Tariff Advisory Committee Manual
	Code for practice for fire safety of buildings

Technical Specification Fire Detection and Alarm System

This specification shall be read and constructed in conjunction with the bid documents and annexure to determine the scope of work.

4.0 DESIGN CRITERIA

General	1. The fire detection system shall consist of various types of fire detectors, control cabling, fire alarm panels, central monitoring station, annunciation/control panels, local panels. 2. The fire detection and alarm system shall be microprocessor based, analogue addressable system. 3. A central monitoring system shall be provided in the control room covering complete substation. 4. The control system shall be compatible to be interfaced with SCADA system through separate communication port.
Location	Fire detectors shall be provided for the entire substation building including control room, switchgear room, battery charger, corridors, Cable Celler etc.Fire detectors shall be located at strategic location in various rooms of the building.
Operation	The operation of any of the fire detectors / manual call point should result in the following : a) A visual signal exhibited in the alarm panel indicating the area where the fire is detected. b) An audible alarm (Hooter) sounded in the panel. c) An external alarm sounded in the building, location of which shall be decided during detailed engineering. d) An alarm should be signaled to the control room.
Detection & Alarm system	1. Each zone shall be provided with two zone cards in the panel so that system will remain healthy even if one the cards become defective which shall be indicated at SCADA . 2. The control panel shall be suitable for 230V AC and 220V DC as power supply.
Cabling	The detector cable and the other control cable shall be armoured, screened and twisted FRLS type in external areas and shall be of unarmoured FRLS type inside building (in conduits)
Tests	All equipment shall be completely assembled wired, adjusted and routine tested at the factory as per relevant standards.
	Following tests shall be performed on the system a) Response characteristics of fire detectors. b) Performance test on fire extinguisher as required in the code. c) A comprehensive visual and functional check for the fire alarm panel. d) Verification of wiring as per approved schematic. e) Testing of fire detection panel as per BS3116 Part IV.
Site Test	All the detectors installed shall be tested for actuation by bringing a suitable smoke source near the detector creating a stream smoke over the detector. After each test smoky atmosphere should be cleared so that the detector shall reset.

	Certify proper operation of all detectors and call points.
	One of each type of extinguisher shall be tested for its performance.

5.0 DEVIATIONS

Deviation from this specification, if any, shall be clearly brought out in the offer. Unless owner explicitly accepts such deviations, it shall be considered that the offer fully complies with the specification.

BSES Rajdhani Power Limited
BSES Bhawan, Nehru Place, New Delhi- 19

TECHNICAL SPECIFICATION

FOR

PACKING & TRANSPORTATION

Prepared by	Sonia Mittal	Mittal	Rev: 1
Reviewed by	Uttam Shukla	Shukla.	Date: 19th Nov., 2025
Approved by	Deepti Sharma	Deepti	

Technical Specification Packing and Transportation

1.0 PACKING AND TRANSPORTATION

1.1 Packing shall be sturdy and adequate to protect all assemblies, components and accessories from injury by corrosion, dampness, heavy rains, breakage and vibration encountered during transportation, handling and storage at the plant site. All accessories, which are likely to get damaged during transit if transported mounted on the equipment, shall be removed, adequately packed and shipped separately. All openings shall be sealed. Spare parts shall be packed separately and clearly marked. They shall be specially packed for long storage without injury.

1.2 The bidder shall after proper painting, pack and crate all plant equipment for sea shipment/air freight in a manner suitable for export to a tropical humid and saline air borne climate region as per Internationally accepted export practice in such a manner so as to protect it from damage and deterioration in transit by road, rail and/or sea and during storage at site till the time of erection. The bidder shall be held responsible for all damages due to improper packing.

1.3 The bidder shall give complete shipping information concerning the weight, size, contents of each package including any other information the Owner may require. The weight and size of the package shall be such that they can be easily transported from the maker's works to the plant site by ship/air, road ways and railways.

1.4 The bidder shall ascertain at an early date and definitely before the commencement of manufacture, any transport limitations such as weights, dimensions, road culverts, overhead lines, free access etc. from the manufacturing plant to the project site; and furnish to the Owner confirmation that the proposed packages can be safely transported, as normal or oversize packages, upto the plant site. Any modifications required in the infrastructure and cost thereof in this connection shall be done and borne by the bidder.

1.5 The bidder shall prepare detailed packing list of all packages and containers, bundles and loose materials forming each and every consignment dispatched to 'site'. The bidder shall further be responsible, for making all necessary arrangements for loading, unloading and other handling right from his works; and from Indian port for equipment under the Off-shore Supply till the 'site' and also till the equipment is erected, tested and commissioned. The bidder shall be solely responsible for proper storage and safe custody of all equipment.

1.6 All packages must be marked consecutively from number one upwards covering all shipments until completion of the plant equipment execution without repeating the same number. Each box, crate, case bundle or each piece of lose material shall be painted with a combination of one white band and one yellow band of a least 4 cm wide each, round the body of the box, crates, etc as the case be for easy identification.

2.0 **It is mandatory** : GPS instrument must be installed for proper tracking of material during transit of major equipment like Transformer, GIS Panel,11KV & 66 KV panels etc. of MAP my india make (asset tracking system)

3.0 DEVIATIONS

Deviation from this specification, if any, shall be clearly brought out in the offer. Unless owner explicitly accepts such deviations, it shall be considered that the offer fully complies with the specification.

BSES Rajdhani Power Limited
BSES Bhawan, Nehru Place, New Delhi- 19

TECHNICAL SPECIFICATION

FOR

MATERIALS WORKMANSHIP & TEST

Prepared by	Sonia Mittal		Rev: 0
Reviewed by	Uttam Shukla		Date: 21.11.2025
Approved by	Deepti Sharma		

1.0 MATERIAL, WORKMANSHIP & TESTS

1.1 General

All materials used in the manufacture of the offered plant equipment shall be of high grade, free from defects and imperfections, of recent manufacture and unused. Materials not specifically described elsewhere, shall as far as applicable and practicable conform to the latest specification of ISS where applicable and equivalent International Standards. Liberal factors of safety shall be used throughout the design for all parts of plant equipment when subjected to the most severe operating conditions. The working stress in all parts of the plant equipment shall be bestowed with ample margins for possible overstressing due to shock.

All work shall be performed and completed in accordance with the best modern shop practice in manufacture of high grade equipment.

Castings shall be free from blow-holes, flaws, cracks or other defects; and shall be smooth, close-grained and of true form and dimensions. No plugged or filled-up holes or other defects will be accepted. No casting shall be burned, plugged, patched or welded; and no repairs or defects will be accepted.

All materials, supplies, parts and assemblies supplied under this specification shall be tested as far as reasonably practical.

All welded joints shall be free from defects such as blow-holes, slag inclusions, lack of penetrations, under-cuts, cracks etc; and shall be made by qualified and tested welders. Slag shall be ground after joint completion; and well reinforced smooth welds shall be made.

1.2 Inspection, Testing program and Notification

Before manufacture commences, the contractor shall submit an outline of the proposed inspection and testing programmes (Quality Assurance Programme - QAP) for all major stages during manufacturing of major equipment. This inspection and testing programme shall include for the various items, the designation number, the kind of test, test standard and the extent of witness by the Owner/Engineer or third party.

The notification of the individual witness inspections made by the Owner/Engineer or the third party, shall be given by the contractor using facsimile or telex or e-mail in a format to be agreed upon. The contractor shall notify the Owner/Engineer within 21 days prior to the date on and the place at which item shall be ready for testing. If any postponement becomes necessary, the contractor shall provide written notification of same at least 72 hours prior to the originally scheduled date.

If the Owner/Engineer does not attend the test at the place and at the date which the contractor has stated in his notification, the contractor shall proceed with the test, which shall

be deemed to have been made in their presence and shall forthwith forward to them duly certified copies of the test readings.

Before erection commences, the contractor shall submit an outline of the proposed erection inspection and test programme during the erection of major systems. The individual testing procedure shall be submitted as progress of erection work of the equipment, systems and/or units, coordinated with relevant work of the complete plant.

Before commissioning commences, the contractor shall submit an outline of the proposed commissioning test procedure. The test programmes shall be maintained by the contractor during erection and commissioning.

1.3 Test : General

During manufacture, the Owner's representative shall have the right to expedite and/or inspect design, materials, workmanship and progress of manufacture of the contractor's and his sub-contractor's plant system equipment and may reject any defective materials considered unsuitable for the intended purpose or which does not comply with the intent of this specification. The contractor, upon any such rejection by the Owner or his representative, shall rectify or replace the defective or unsuitable material. The contractor shall provide every reasonable inspection facility to the Owner's inspector or representative at his own and his sub-contractor's works.

Material being furnished against this order shall only be shipped when factory inspection satisfactory to the Owner and/or his representative has been conducted. Such inspection and acceptance for shipment shall not however, relieve the contractor from entire responsibility for furnishing the plant system equipment conforming to the requirement of this specification nor shall prejudice any claim, right or privilege which the Owner may have, because of the use or supply of defective or unsatisfactory materials for the plant system equipment. Should the inspection be waived by the Owner, such waiver shall not also relieve the contractor in any way, from his entire obligations under this order.
The plant system equipment shall at factory or after installation be demonstrated capable of performing satisfactorily upto the contractor's guaranteed performance. All tests required by this specification, including retests and inspection, that may be necessary owing to failure to meet any tests specified, shall be made at the contractor's expense. Additional tests, as necessary, shall be made to locate any such failure and after determining the causes of failure and rectifying it, specified tests shall be repeated to establish that the rebuilt plant system equipment meets with the specification in every respect. Should the equipment ultimately fail to pass the tests specified, the Owner will have the option to reject the unit.

The bidder shall state in the proposal, the shop testing facilities available. Should full capacity testing equipment be not available, the bidder shall state the method proposed to be adopted with detailed computations and justification for adopting such a method to reliably ascertain the equipment characteristics corresponding to full capacity testing.

1.4 Test Certificate

In accordance with approved QCP, the results of the tests shall be certified by the Owner/Engineer or independent agency as applicable. As and when the item of the plant equipment has passed the tests, the Owner/Engineer shall furnish to the contractor a certificate in writing to that effect. The Quality Control Plan (QCP) shall be issued by the contractor within 1 months after NTP. Document files containing material certificates, test reports, etc shall be compiled for each QCP item of plant equipment; and shall be suitably identified (including equipment classification reference) and bound. Copies of compiled file shall be submitted as per distribution schedule

1.5 Tests at Manufacturers Works

The major equipment of the plant to be supplied under this contract shall be subjected to shop inspection and tests. After NTP, the contractor shall issue within 1 months a QCP indicating the kind and extent of inspection and tests to be carried out on the offered plant equipment components to prove whether the equipment fulfills the requirement of the contract in view of:

- Safety Conditions
- Consideration of the applied standards and regulations
- Execution of workmanship

SITE TESTS

Tests conducted at sites shall be indicated by bidder.

2.0 DEVIATIONS

Deviation from this specification, if any, shall be clearly brought out in the offer. Unless owner explicitly accepts such deviations, it shall be considered that the offer fully complies with the specification.

BSES Rajdhani Power Limited
BSES Bhawan, Nehru Place, New Delhi- 19

TECHNICAL SPECIFICATION

FOR

MISCELLANEOUS ACTIVITIES

Prepared by	Sonia Mittal		Rev: 0
Reviewed by	Uttam Shukla		Date: 21.11.2025
Approved by	Deepti Sharma		

Chapter 6b Technical Specification Misc Activities

1.0 SERVICE AFTER SALES

1.1 The bidder shall furnish in detail about his organization for rendering service after sales, covering deployment of personnel and supply of spares, for ensuring efficient operation and maintenance of the offered plant equipment. The details of spares and service facilities possessed by them should be elaborated.

1.2 The bidder shall guarantee furnishing of the following in respect of after sales services including spares:-

i) Providing services of his specialists on indent from the Owner for periodical or special maintenance of the plant; as well as for identifying sources of trouble, if any, reported and measures for immediate rectification.

ii) The bidder shall guarantee maintenance of adequate spares at his works to be supplied on indent from the Owner at short notice during the life of the plant.

2.0 BID DATA, DRAWINGS AND INFORMATION REQUIRED

2.1 Technical data sheets, drawings, schedules with supporting information incorporating the details in compliance to spec but not limited to the following shall be furnished along with the proposal:

2.2 Duly filled in 'Schedule of Guaranteed and other Technical Particulars Schedules ‘C’ except for data which cannot be finally furnished with the Bid. The Price and Delivery Schedule-B duly filled in.

2.3 Dimensioned outline drawings of the offered overall plant and separately for equipment including cross-sectional drawings showing dimensions, net weights, shipping weights and suggested arrangement layout of proposed plant & equipment with auxiliaries etc. Technical Literature/leaflets of the above plant equipment.

2.4 Manufacturers' catalogues showing the construction details of various equipments should be furnished indicating clearly the technical preference of the offered equipment over the specified equipment.

2.5 List of users of comparable plant equipment with the year in which the Diesel plant and other critical plant equipment was put actually into service. For technical acceptability of the bid, proven experience of the bidder in manufacture and satisfactory and trouble free performance of the critical plant equipment for at least three (3) years is essential for which the bidder shall furnish necessary documents in support of the above.

2.6 A bar chart of design, engineering, procurement, manufacture, testing, delivery, installation, commissioning and site testing including civil structural and architectural works of the proposed plant equipment.

2.7 Technical description of the proposed plant equipment and materials particularly outlining any additional list out features proposed for safety & reliability. List out items of work & services not included and which has to be provided by the Owner for satisfactory commissioning of the offered plant equipment supplied.

2.8 The bid shall not be considered if the bidder fails to submit all the details asked for. Proposal should be complete without ambiguity and should be clearly written against each item.

2.9 Bidder shall furnish Quality Assurance Programme for design, manufacture, assembly, erection, testing & commissioning including civil, structural and architectural works along with the proposal for all equipment covered under this specification whether manufactured by the bidder or procured from other sources.

2.10 Technical deviations from the specification, if any, shall be clearly listed in the Schedule-E. In absence of any deviation given in Schedule-E and accepted by Owner, it will be bidder's responsibility and his contractual obligation to supply the Plant equipment as per specification to Owner/Engineer's approval.

2.11 List of shop and site tests, the bidder proposes to carry out including those pertaining to their sub-suppliers works shall be clearly brought out in Schedule – G. In addition to above tests, the bidder shall conduct any other tests, to Owner/Engineer's approval, which are considered important for satisfactory operation of plant equipment.

2.12 Bidder shall furnish all required mandatory and startup commissioning spare parts as well as maintenance tools and tackles with unit prices for the offered plant equipment.

3.0 POST CONTRACT DATA AND DRAWINGS

3.1 The contractor shall submit within thirty (30) days from the date of the order and Notice to Proceed (NTP) certified dimensioned drawings and technical schedules giving every detail of the offered plant equipment particularly the following:

3.2 Completely filled in schedule of guaranteed particulars and other technical particulars.

3.3 Single line diagrams; logic diagrams, dimensioned general arrangement and equipment layout drawings showing front and side elevations, plan and sectional views of the offered equipment forming part of the contractor's supply; The drawings should also indicate structures & supporting details including foundation outline and loading data etc.

3.4 Final version of all drawings and data submitted along in the proposal mentioned above.

3.5 Structural, thermodynamic and pressure part calculations showing compliance with specifications and codes as and when required.

3.6 Any other drawings/details not specified herein and required by the Owner/Engineer to correctly coordinate the offered plant equipment with other contractor's work.

3.7 Civil design calculations.

3.8 Detailed specifications and data sheets of the plant equipment with auxiliaries.

3.9 Detail drawings of critical equipment units, assemblies, parts etc. as deemed necessary.

3.10 Design calculations of conductor sizing, cable sizing, main equipment sizing etc.

3.11 Schematic wiring diagrams along with write-ups for control, interlocks, instrumentation, protection, circuits. Terminal blocks and terminals arrangement drawings showing power & control cable connections.

3.12 Owner/Engineer will return to the contractor one (1) print of each drawing either.

(a) stamped approved or (b) marked up with the comments. In case of (a), no further submission of a drawing will be required. In case of (b), the contractor shall correct his original drawings to conform to comments made by the Owner/Engineer and resubmit within two (2) weeks of receipt of comments in the same manner as stated in the Distribution Schedule. The Owner/Engineer's approval shall not relieve the contractor from any of his obligation and responsibility to manufacture and supply equipment conforming to this specification, unless a written amendment to the specification is issued by the Owner.

3.13 After approval of the drawings, reproducible of each drawing shall be supplied. Final drawings shall be certified as Approved for Construction. Should any minor revision be made after approval the contractor shall re-distribute prints and reproducible as per the Distribution Schedule. Every revision shall be marked by a number, date and subject in a revision block provided in the drawing.

3.14 Reproducible shall be of quality to produce clear and legible prints and any inferior reproducible will be returned by the Owner for replacement with suitable reproducible. All reproducible shall be mailed rolled (not folded) on the outside of regular mailing tubes except for small sizes which can be mailed unfolded in envelope with a cardboard backing. The prints and reproducible shall be mailed in the most expeditious manner and shall be accompanied with a letter of transmittal.

4.0 INSTRUCTION MANUAL

4.1 At least one (1) month prior to the dispatch of the plant equipment, fifteen (15) copies of installation, testing and adjustments after installation, operation and maintenance manuals shall be furnished. These manuals shall be sturdily bound volumes and shall contain every drawings and information required for installation, testing, setting and adjustment of all components after installation, operation and maintenance of the equipment and all its components. Separate tabs shall be used for such instructions concerning each equipment control components, electrical and other accessories. The other data needed for servicing the components and ordering their spare parts.

4.2 Marked erection prints identifying the components parts of the equipment, as transported, with its assembly drawings.

4.3 Detailed dimensioned assembly and cross sectional drawings and description of all the plant system equipment with auxiliaries and drawings identifying all spare parts for re-order.

4.4 Documentation

Correspondence, drawings, progress reports, schedules, tests reports and instruction manuals shall be mailed in requisite copies in accordance with Distribution Schedule.

5.0 WORK SCHEDULE

5.1 Time being the essence of the proposal, preference will be given for the offers quoting earlier deliveries. The bidder shall include in his proposal his programme for furnishing and erecting the offered plant & equipment.

5.2 The programme shall be in the form of master network identifying the key phases in various areas of total plant work, such as design work, procurement of raw materials, manufacture of components & subassemblies; complete erection of equipment and all other field activities. The master network shall conform to completion of trial operation from the date of Letter of Award within a period of 4 months. The trial operations shall commence any day within 15 days prior to the date of completion indicated above.

5.3 This master network shall be discussed and agreed before the issue of letter of award. Engineering drawings as well as technical data sheets submission schedule shall also be discussed and finalized before the issue of letter of award. Provisions of the liquidated damages leviable for delays in completion of trial operation shall become effective after the above mentioned date.

5.4 After the contract award, the contractor shall plan the sequence of work of manufacture and erection including associated civil works to meet the Owner's power plant commissioning requirements; and shall ensure that all work/manufacture, shop testing, inspection & shipment of the equipment in accordance with the required construction/erection sequence.

5.5 Within seven (7) days of acceptance of the letter of award, the contractor shall submit, for review and approval, two copies (1 reproducible and 1 print) of Detailed Network schedules, based on the Master Network (mutually agreed by the Owner & contractor) to the Owner/Engineer showing the logic & duration of the activities in the following areas

i) Engineering, Procurement, Manufacturing & Supply Detailed engineering activities in regard to procurement of raw materials including bought out items, manufacture, dispatch/ shipment & receipt at site.

ii) Civil, Structural & Architectural Works:

Detailed engineering activities in regard to civil & structural works execution based on the offered equipment and approved drawings including detailed execution of execution activities covering the complete scope of work.

iii) Erection, Testing and Commissioning:

Detailed erection, testing and commissioning activities, covering the complete scope of work of the offered plant equipment coordinated with the civil and structural works executed.

5.6 Detailed Manufacturing Program

Detailed manufacturing PERT/PRIMAVERA programme for all the manufacturing activities of the offered plant equipment at contractor's/subcontractor's works shall be furnished within 7 days of letter of award.
The manufacturing network shall be supported by detailed procurement programme for critical bought out items/raw materials

Pre-erection Activity Programme
A) Manpower Deployment
B) Tools and plant mobilization plan
C) Detailed Site Mobilization Plan

5.7 Within a week of approval of the Network schedule, the contractor shall forward to the owner/Engineer copies of the Computer initial run data in an acceptable manner

5.8 The network shall be updated every month; or as frequency as possible to mutual agreement. Within seven (7) days following the monthly review, a progress meeting shall be held at the work (possible) wherein the major items of the plant or equipment are being produced. The meeting will be attended by the Owner/Engineer and responsible representatives of the contractor. The contractor shall be responsible for minuting the proceedings of the meeting, a report of which shall reach the Owner or the Owner/Engineer not later than 7 days following the meeting.

5.9 Access to the contractor's and/or sub-contractor's work shall be granted to the Owner/Engineer at all reasonable times for the purpose of ascertaining the progress

6.0 PROGRESS REPORTS

During execution of the contract either in manufacture or erection/commissioning, the contractor shall furnish monthly progress report to the Owner or the Owner/Engineer in a format as specified indicating the progress achieved during the month, and total progress upto the month as against scheduled and anticipated completion dates in respect of key phase of work or manufacture and shipment such as release of drawings for fabrication, procurement of raw materials, inspection and testing. If called for by the Owner/Engineer, the contractor shall also furnish to the Owner or the Owner/Engineer resources data in a specified format and time schedule. The contractor shall also furnish any other information necessary to ascertain progress if called for by the Owner/Engineer

Chapter 6b Technical Specification Misc Activities

7.0 DEVIATIONS

Deviation from this specification, if any, shall be clearly brought out in the offer. Unless owner explicitly accepts such deviations, it shall be considered that the offer fully complies with the specification.

BSES

Technical Specification

Of

Electrical Overhead Travelling (EOT) Crane

Specification no – BSES-TS-304-EOTCR-R0

Rev:		0
Date:		09 Oct 2025
Prepared by	Alok Mandal	
Reviewed by	Uttam Shukla	
Approved by	Deepti Sharma	

Contents

1.0 SCOPE 3
2.0 CODES AND STANDARDS 3
3.0 CYBER SECURITY 4
4.0 SCOPE OF SUPPLY ITEMS 6
5.0 TECHNICAL DETAILS 7
6.0 FEATURES 7
7.0 INSPECTION &TESTING 9
8.0 DRAWING AND DOCUMENTS 10
9.0 TRANSPORTATION EQUIPMENT AT SITE 11
10.0 PACKING, STORING AND UNPACKING 11

1.0 SCOPE

- This specification applies to the design, engineering, manufacturing/fabrication, assembly, inspection, testing before dispatch, packing, forwarding, supply and delivery at destination by suitable transport, unloading at site, installation and commissioning of indoor EOT crane on Turnkey basis and as specified in the following sections of this document.

2.0 CODES AND STANDARDS

Sl no.	Heading	Function Description
2.1	IS:325-1978	3-Phase induction motors (fourth revision)
2.2	IS:807-2006	Code of practice for design, manufacture, erection and testing (structural portion) of cranes and hoists.
2.3	IS: 2062-1992	Specification for structural steel (fusion welding quality)
2.4	IS:2266-1989	Steel wire ropes for general engineering purposes
2.5	IS:3177- 1999	Code of practice for electric overhead travelling cranes and gantry cranes other than steel work cranes.
2.6	IS:I3947(Part-1)-1993	Low voltage switches and control gear PI-general rules
2.7	IS:I3947(Part-4, Section-1) -1993	Low voltage switchgear and control gear P-4 - contactors and indoor starters sec 1, electromechanical contactors and motor starters (superseding IS:2959 and IS:8544 – all parts)
2.8	IEE:C37.24-2018	Standard for Power System Relaying terms and definitions.
2.9	IEEE:C37.90-2005	All Protection Trip Relays.
2.10	IEEE:C37.112-2010	Guide for relay application in power systems.
2.11	IS:9000 part1-1998	Basic environmental testing procedures for electronics & electrical items.
2.12	IEEE:80	Guide for Safety in AC Substation Design.
2.13	IS:13703 - 1993	Low voltage fuses for voltages not exceeding 1000V AC or 1500V DC.
2.14	IEC:60629	Low Voltage fuses.
2.15	IEC:60282	High Voltage fuses.
2.16	IS:9244(part3) / IS:13703	HRC fuses.
2.17	IS:694	PVC insulated cables for working voltages upto and including 1100V.
2.18	IS:722	AC Electricity meters.
2.19	IEC:61850	Communication Networks and Systems in substations.
2.20	IEC:60529	Degrees of Protection provided by Enclosures.
2.21	IS:2982	Copper conductor in insulated cables.

2.22	IS:3961 (part1-part5)	Current rating for cables.
2.23	IS:5831	PVC insulating and sheath of electrical cables.
2.24	IS:375	Auxiliary wirings.
2.25	IS:1248	Indicating instruments and other applicable standards.
2.26	IEC:62351	Cyber Security type tests of IEDs/Numerical relays/Gateways/Transformer Tap controllers/Changers, etc with IEC 61850, IEC101, IEC103, IEC104 communication protocol network systems.
2.27	IEC:27036 IEC:20243 IEC:62443	Supply Electrical Devices from outside India, type tests for communications, cyber security conformance tests.
2.28	IEC:60973	OFC used for various equipments& panels located in AC/DC Switchyards, Control rooms, valve halls to transmit the required signals for integration, control, monitor, etc.

3.0 CYBER SECURITY

Sl no	Heading	Function description
3.1	Reference Standards	IEC:61850 – 5 to 10, IEC:27036, IEC:20243, IEC:62443, IEC:62351 and other relevant standards of IS/IEC/ANSI/IEEE,etc must be incorporated and Rules & Standards of Govt. of India, Ministry of Power/Other Central, State Departments & International best practice on Cyber security in Electrical Power Systems.
3.2	Policy	The documented type test & conformance valid parameters for a set of business rules and process for protecting information, computer resources, networks, devices, electrical/electronic programmable devices, software's, industrial control systems and other Information Technology (IT) / Operation Technology (OT) systems shall be used to protect a sensitive & critical infrastructure of Electrical Power generation, transmission, distribution in protections, control operations, measurements, monitoring purposes.
3.3	Cyber Security Threats, Violations, Incidents, Unauthorized access on Power System ITs/OTs.	Cyber security violation/incident occurs by unauthorized or illegitimate accessor a person, group of persons, entity, of data, applications, services, networks and/or devices through bypass of the underlying cyber security protocols, policies and mechanisms resulting in the compromise of the confidentiality, integrity or availability of data/information maintained in a computer resource, protection equipment's, protection devices, sensors, meter devices, mechanism, automation, RTUs, PLCs, SCADA

		and other connected within respective electrical utilities & organizations.
3.4	Cyber Security systems	The cyber security of electrical power systems/ networks shall be available to protect the security, integrity and reliability. The protection of IED's/other Electric/Electronic devices information (or data's) against unauthorized or destruction whether accidental or intentional.
3.5	Critical Assets	The critical assets shall be of system, equipments and facilities which, if destroyed, degraded or otherwise declared unavailable, would affect the reliability or operability of the electrical power system.
3.6	Type test reports IEC:62443, IEC:62351 (India made devices)	The IEDs, RTU, FRTUs, PLCs, SCADA, Communication network switches, any related programmable software's/hardware's, etc systems that involved in electrical power sector for control & monitoring critical information shall be verified for a sample size for testing minimum one number from each make, type and having same firmware version for the supply one lot size of 200 numbers or less.
3.7	Type test reports IEC:62443, IEC:62351 (India made devices)	The Smart meters, other energy meters the sample six for testing shall be minimum one number for each make, type and have same firmware version for the supply one lot size of 5000 numbers or less.
3.8	Type test reports IEC:27036 IEC:62443 IEC:62351 IEC:20243 (Other country made devices)	The IEDs, RTU, FRTUs, PLCs, SCADA, Meters, Communication network switches, any related programmable software's/hardware's, etc systems that involved in electrical power sector for control & monitoring critical information for importing products/system shall be verified for a sample size 5% of the supply lot for each make, type and having same firmware version for the supply lot.
3.9	Protection & Control devices, Network & Programmable devices of substation equipment's	The IEDs, Communication Networks related devices, Software's, Hardware's in relation of critical electrical equipment which ever transfer data files, control & monitoring data files within power sector, state utilities for reliable power sector, which is a strategic & critical sector.
3.10	RTU domain cyber security terms & conditions	As the RTU/SCADA system will use public domain, such as LAN/VSAT/GPRS/CDMA/SATELLITE Based networks for communication media, therefore it is mandatory to guard the data / equipment from intrusion/damage/breach of security & shall have SSL/VPN based security.
3.11	IED'S like Protection devices, Control devices.	Communication protocol conformance standards shall be followed as per IEC 61850-5 to IEC 61850-10 and respective clauses.
3.12	RTUs,FRTUs,SCADA, PLC, etc with IEC communications.	Communication protocol conformance standards shall be followed as per IEC:60870-5-101/ IEC:60870-5-103/ IEC: 60870-5-104 and respective clauses.

3.13		Protocol Security conformance standards shall be followed as per IEC:60870-7, IEC:62351-100 part1&3 and respective clauses.
3.14	Smart meters with IEC 62056	Protocol Security conformance & Communication protocol conformance standards shall be followed as per IS:15959 series, IS:16444 series and respective clauses.
3.15	Mandatory tests case	The test is referencing a clause that is mandatory in IEC: TS 62351-5, IEC: TS 60870-5, IEC: 62351-3 which defines the requirements related to the authentication/encryption protocol, procedures and methods to be implemented at Fiber, TCP/IP(transport) level, Modbus,etc.
3.16	Approved/ Designated Laboratories	Central Power Research Institute (CPRI) approved laboratory for IEDs, RTU, FRTUs, SCADA, PLC systems. Central Power Research Institute (CPRI) Electrical Research & Development Association (ERDA), Yadav Measurements Pvt Ltd(YMPL) for Smart meter devices. If any other departments if approved shall be as per Ministry of Power/Other related departments for confirmation of Cyber security in power systems. If any changes according to Govt.rules/notifications/MoP,etc the same shall be incorporated time to time without cost implications.
3.17	Miscellaneous	Words and expressions used and not identified in these above regulations but defined in the information technology Act 2000 and the Electricity Act, 2003 shall be followed for cyber security of power system time to time.
3.18	Certificates Validity	Product certifications/type test reports of any Electrical/Electronic devices connected in power systems for respective protection/functions/controls/monitoring shall not be older than 5 years during supply of same items.
3.19	Reports	All necessary type test reports, certifications shall be submitted for RTU panel/ Equipments at Pre Bid / Engineering/ Inspection by supplier/vendor.
3.20	RTU Processor	RTU Processor with enhanced cyber security features, SNMPv3, https, SSL and TLS based encryption for 104 communication and shall comply with IEC 62351-3, IEC 62443-4-1, IEC62443-4-2 std for cyber security requirements for Industrial OT system.

4.0 SCOPE OF SUPPLY ITEMS

Sl no.	Function Description
4.1	**The EOT cranes will consist of the following major components:**
4.1.1	Single Girder
4.1.2	Trolley Frame

4.1.3	Brakes
4.1.4	Wheels and rails
4.1.5	Hooks (main/auxiliary) and hoist rope
4.1.6	Operator's cabine/radio control
4.1.7	Conductors
4.1.8	AC Motor
4.1.9	Shrouded down shop leads (DSL) with maintenance cage
4.1.10	Control panel

5.0 TECHNICAL DETAILS

The girder will be of box type construction and will ensure that water/oil do not accumulate inside the box. The trolley frame will be fabricated from rolled sections/steel plates. The main hoist, auxiliary hoist, cross travel trolley, and long travel trolley of the crane will be motor driven. The structural portion of the EOT crane will be designed to meet the requirements of Class II of IS 807 (Indian Standard). The EOT crane will be designed (other than the structural steel portion) to meet the requirements of Class M5 of IS 3177.

Sideward approaches from the operating floor level to the rail level will be provided in both rows for access to the bridge. Safe means of access will be provided in the cabin and other areas of the crane where maintenance of any equipment or component is involved. A platform will extend the full length of the crane bridge on both sides of the bridge girder
The EOT crane will have a permanent inscription in English and Hindi on each side, readily visible from the operating floor level, stating the safe working loads in metric tons for both the hooks, the year of manufacture, crane serial number, and manufacturer's name.

6.0 FEATURES

Sl no.	Function Description
6.1	The EOT crane will be of double girder, bridge type.
6.2	Access to EOT Crane shall be provided with Caged Ladder inside control room.
6.3	A permanent cage ladder with steel grating platform all along the length of the room between side wall and main beam which has power tapping DSL.
6.4	Safety Railing on EOT Crane for maintenance.
6.5	The EOT crane shall be designed for lifting 25% more than the heaviest piece of equipment (detailed calculation shall be submitted by Vendor for approval), However minimum capacity shall not be less than 5 Ton.

6.6	Steel will be of tested quality steel conforming to IS 2062 (Grade B).
6.7	Handrails will be of galvanized steel pipe of flush welded construction, ground smooth using 32 mm.Nominal bore medium class pipe conforming to IS 1239 (Part II).
6.8	The wheels and rails act as a guide for EOT cranes to provide smooth and linear motion.
6.9	The crane panel will have two incoming supplies. The two isolators will have mechanical interlock(through Castell key) to prevent simultaneous closing of the two isolators.
6.10	Electrical motors will be selected with an S4 duty, a 25 percent cycle duty factor, and 150 starts per hour.
6.11	Speed of the hoist shall be 3-4 meter per min and the creep speed through DCEM clutch and pony geared motor shall be maximum 0.5 meter per min.
6.12	The height of lift and length of long travel shall be in accordance to the GIS room.
6.13	The end carriage & Trolley frame shall be fabricated with MS Rolled channels andMS plates; suitable stiffeners and diaphragms shall also be provided.
6.14	Antiskid skid chequered plate with suitable maintenance platform for Hoist Block and long travel drive shall be provided. Sufficiently wide full length walk way with hand railing should be provided on the girder. Drawing &all other related document is to be approved from the user Dept.
6.15	Totally enclosed helical splashed oil bath lubricated gear box shall be used for all motion. All gear & pinion shall be hardened and tempered alloy steel having metric module machine cut teeth. The housing shall be graded cast iron / cast steel or fabricated from steel plates. Fabricated housing shall be stress relieved before the machining. The gear box shall be oil tight and fitted with oil level indicator, breather plug, inspection cover and oil drain out plug. The internal surface of gearbox shall be painted with oil resistant type paint.
6.16	Rope drum shall be fabricated form rolled steel plates or seamless tube. Fabricated rope drum shall be stress relieved before machining. The rope drum shall be designed for single layer of rope; the helical groove shall be smooth finished.
6.17	Wire rope shall be regular right hand lay fiber core as per IS: 2266. The construction of wire rope shall be 6X36 constructions. The factor of safety shall be 6 minimum. Rope sheaves shall be graded cast iron. The rope sheaves shall be mounted on anti-friction bearing.
6.18	Lifting hook shall be single point with shank as per IS: 3815. The hook shall be mounted on anti-friction thrust bearing which shall be enclosed by protective skirt for360° smooth swivelling of the load on the hook. The block sheaves · shall be fully encased in close fitting guards fabricated out of steel plate. Smooth opening shall be provided in the guard to allow free movement of rope. Hook block should be tested and certified with proof load from Govt. accredited testing authorities. Test certificates for lifting hook shall be furnished during the supply.
6.19	All electrical motors shall be totally enclosed fan cooled, S4 Duty, Squirrel Cage Induction Motor. The starting motion of all travel shall be jerking free. Suitable starting arrangement shall be provided for all LT motor to reduce the starting current to achieve smooth starting and thereby jerk free operation in all motions of the crane. Motor shaft shall be connected to the gear box through gear type

	flexible coupling.
6.20	Pendent push button shall be suspended from crane by link chain so that no undue stress can come on the cables. · The Push button station shall be independently movable. Separate cable track with cable trolley etc. shall be provided for the push button station. The unit shall comprise of push button marked as follows and 1no Indication lamp for control of indication:
6.20.1	Start
6.20.2	Emergency Stop
6.20.3	Up (hoist)
6.20.4	Down (lower)
6.20.5	Slow Down
6.20.6	Slow Up
6.20.7	Left – CT
6.20.8	Right – CT
6.20.9	Forward – LT
6.20.10	Reverse – LT
6.21	The unit shall comprise incoming ACB / MCCB with positive isolation contactor, line chock, three phase diode bridge rectifier acting as line converter and three phase inverter as load converter interconnected through DC link reactor and capacitor unit.

7.0 INSPECTION &TESTING

The crane supplier shall put up the crane for inspection at his Works as well as at site and the following tests shall be carried out by him in the presence of the Purchaser or his authorised representatives.

7.1	All the dimensions of the crane shall be checked as per the approved general arrangement drawings. Diagonal measurement of the crane and trolley shall also be carried out in the fabrication shops before dispatch to site.
7.2	The deflection of the bridge girders shall not exceed 1/1000 of span with the fully loaded trolley stationed at mid-span with safe working load at rest. The measurement shall not be taken on the first application of the load. The datum line for measuring the deflection should be obtained by placing the unloaded trolley at the extreme end of the crane span.
7.3	The girders shall be tested for permanent set by applying 125% of the safe working load when the trolley is stationed at mid-span. At the end of the test there shall be no sign of permanent set of the girders.

7.4	Height of lift shall be checked by measuring the length of hook travel from its topmost position to the bottom-most position and this shall not be less than the lift specified.
7.5	All the motions of the crane shall be tested with rated load and the rated speeds shall be attained within the tolerance limits.
7.6	All the motions of the crane shall be tested with 25% overload in which case the rated speeds need not be attained but the crane shall show itself capable of dealing with the overload without difficulty.
7.7	For checking the performance of the hoist motion the speed at each notch of the master controller with different loads both during hoisting and lowering shall be found out and the load/ speed characteristics shall tally with the speed/torques graph submitted.
7.8	For the performance of long travel and cross travel motions, the crane shall be tested with rated load and the running time for a particular distance shall be as per the acceleration values specified.
7.9	The hoist brakes shall be tested so as to enable to brake the movement under all conditions without any jerk on the load. The brakes shall also be tested with overload condition.
7.10	The long and cross travel brakes shall be capable of arresting the motion within a distance in meters equal to 10% of the rated speed in meters/minute
7.11	Limit switches for all the motions shall be tested for their proper operation and shall be set right so as to obtain the required hook approaches and lifting height.
7.12	Insulation and other tests as per applicable codes shall be carried out.
7.13	Trolley frames shall be designed in accordance with applicable sections of IS 2062/IS 12075.
7.14	The main function of the trolley frames is to provide rigid support and strength to the EOT cranes to carry a load from one place to another.
7.15	The trolley frame will be fabricated from rolled sections/steel plates. End carriages will be of weldedConstruction. Mountings will be designed to facilitate easy removal of the wheels, bearings, and journals for quick and easy maintenance. Wheel or wheel end carriage mountings will be complete with safety pads to prevent an accidental drop of more than 25 mm. Jack pads will also be provided on the trolley and bridge wheel mounting structural frames for the removal of wheels.

8.0 DRAWING AND DOCUMENTS

Following drawings are to be submitted for scrutiny and approval

8.1	The detailed general arrangement drawing containing all basic dimensions and vital particulars of the crane. These drawings should indicate the main specification, number and location of joints provided on the girder plates, CT rails etc. structural calculation, drawings of main load carrying members, if asked for by Purchaser.

8.2	General arrangement drawing of the trolley.
8.3	Motor power &brake selection calculation.
8.4	Cabin layout drawing showing location and mounting of all equipment.
8.5	Control equipment supplier's schematic control circuit diagrams for individual drives along with speed-torque characteristics and explanatory notes.
8.6	General arrangement drawing for control panel with sections.

9.0 TRANSPORTATION EQUIPMENT AT SITE

The contractor shall be responsible for the loading, transport, handling and offloading of all equipment and materials from the place of manufacture or supply to site. The contractor shall be responsible to select and verify the route, mode of transportation and make all necessary arrangement with the appropriate authorities as well as determining any transport restrictions and regulations imposed by the government and other local authorities.

10.0 PACKING, STORING AND UNPACKING

All the equipment shall be carefully packed for transport in such a manner that it is protected against the climatic conditions and the variations in such conditions that will be encountered enroute from the manufacturer’s works to the site.

BSES

Technical Specification

Of

Cable Seal Solution

Specification no – BSES-TS-302-CABSE-R0

Rev:		0
Date:		09 Oct 2025
Prepared by	Amar Deep Singh	
Reviewed by	Uttam Shukla	
Approved by	Deepti Sharma	

# #

Index

1.0 Scope
2.0 Basic Features
3.0 Service Conditions
4.0 System Design
5.0 Installation, Testing and Commissioning
6.0 Maintenance
7.0 Approved Makes.
8.0 Drawing and Data submission
9.0 Shipping
10.0 Handling and Storage
11.0 Quality
12.0 Deviation
13.0 Testing and Inspection
14.0 Training

1.0. SCOPE:

This specification covers design, engineering, manufacture, assembly, stage testing, inspection & testing before supply & delivery at site and installation testing and commissioning including handover the system to BRPL after successful execution of Cable Seal Solution
This Scope includes the following

a) Supply of Cable Seal System including its transportation to BRPL Site
b) Installation testing commissioning of Cable seal solutions with all the accessories including minor civil work if any.

2.0. Basic Features:

Following requirements shall be fulfilled and supported with valid test reports/certificates:

1. Minimum IP 65 Protection level Certificate for protection from Dust and Water.
2. Heat sink test report of Cable transit system.
3. Certificate/ Test Report for Protection from Rats and Rodents.
4. ATEX, PESO Approval for Explosive atmosphere.
5. NEMA Certificate as per UL 508A for the safety of Cabinets & Enclosures mandatory.
6. Material of Frame shall be of Stainless Steel.
7. System must have Bonding & grounding (Armour Earthing) feature as per IS 3043-1987 using a suitable Tin Plated Copper Braid to be used wherever required. It should be also tested for Impulse withstands as per IEC 62305-1 for minimum 50kA for 1 sec.
8. Manufacturer should have direct presence in India with all the after Sale & Service support from last 10 years.
9. Cable sealing system should have been tested for F- Rating Fire for 3 hrs as per UL 1479/ EN, Insulation and Integrity for 120 mins as mentioned in Indian National Building Code(EI 120) Certificate from BS 476 are mandatory.
10. Cable sealing system should have been tested for GAS tightness of 2.5 bar pressure.
11. EPDM modules in System must have Halogen content less than 200ppm with low smoke index-F1 Classification as per NF16-101 & NF16-102, Heat Radiation test in compliance with M2 classification, UV Ageing Test as per ISO-4892-2:2006 & ISO-815- 1:2008, Oxygen Index Test as per ASTM D 2863-00, Shock & Vibration Test as per NES 510.
12. System must have Bonding & grounding (ArmourEarthing) feature as per IS 3043-1987 using a suitable Tin Plated Copper Braid to be used wherever required. It should be also tested for Impulse withstand as per IEC 62305-1 for minimum 50kA for 1 sec.
13. Smoke Index shall be low. Type test reports for the same shall be provided by the supplier.
14. Shelf life of module - 25 Years
15. Solubility – Insoluble in water.

3.0. SERVICE CONDITIONS:

S.No	Particulars	Data
1	Design Ambient temperature	0°C to 50 °C
2	Seismic Condition	Zone IV as per IS 1893
3	Wind Pressure	195 kg/M² upto elevation of 30 M as per IS 875
4	Maximum Relative Humidity	100%
5	Maximum Altitude above Sea level	1000M
6	Rainfall	750mm (concentrated in 4 months)
7	Pollution level	Heavy/Dry
8	Average of no thunderstorm days	40 per annum

4.0. SYSTEM DESIGN

1. Modules with concentric peel able/removable layered multi-diameter cable sealing system consisting of frames, blocks and accessories shall be installed where the cables enter or leave any type of Electrical Panel/Cabinet/Transformer cable box.Each concentric module shall have a minimum of 10 mm range between smallest and largest adaptable diameter. System should be designed with minimum **+/-** 3 mm design margin. System should have provision for usable spares of 30**%** with no loose/ hanging / add layer / plug in type or to be stored components of modules / seals, each spare module should be concentric peelable/removable multi-diameter layered with complete range installed on Frame and solid Block are not acceptable..

2. It Shall cover following openings

   For all Cable entry from outside to control room building and between room to room

5.0. MAINTENANCE

Bidder shall furnish a maintenance manual and support maintenance activity.

6.0. APPROVED MAKES

Roxtec, MCT Brattberg, UGA Systems

7.0. APPROVED MAKES

8.1	Submissions along with the bid	
8.1.1	Duly filled GTP and copy of	2 copies + 1 soft copy

	specification	

8.0. SHIPPING

9.1	Shipping	The bidder shall ascertain at an early date and definitely before the commencement of manufacture, any transport limitations such as weights, dimensions, road culverts, Overhead lines, free access etc. from the Manufacturing plant to the project site. Bidder shall furnish the confirmation that the proposed Packages can be safely transported, as normal or oversize packages, up to the site. Any modifications required in the infrastructure and cost thereof in this connection shall be brought to the notice of the Purchaser.
		The Bidder shall be responsible for all transit damage due to improper packing.

9.0. HANDLING AND STORAGE

10.0	Handling and Storage	Manufacturer instruction shall be followed. Detail handling & storage instruction sheet / manual needs to be furnished before commencement of supply.

10.0. QUALITY

11.1	Vendor quality plan	To be submitted for purchaser approval
11.2	Inspection points	To be mutually identified & agreed in quality plan

11.0. DEVIATION

12.1	Deviation	Deviations from this Specification shall be stated in writing with the tender by reference to the Specification clause/GTP/Drawing and a description of the alternative offer. In absence of such a statement, it will be assumed that

		the bidder complies fully with this specification. No deviation will be acceptable post order.

12.0. TESTING AND INSPECTION

Shall be as per latest relevant standards

13.0. TRAINING

Training on installation, commissioning, operation and maintenance shall be included in the proposal.

- at factory/site- 1 Manday

TECHNICAL SPECIFICATIONS

OF

INSULATING MAT

BSES RAJDHANI POWER LTD.				
Prepared by	Naved Ahmad	Naved Ahmad 15/5/18	Date:	15.05.2018
Reviewed by	Amit Tomar		Revision	R0
Approved by	K. Sheshadri	15/05/18	No of Pages:	8

Contents

1.0 Scope of Supply....3
2.0 Service Condition....3
3.0 Applicable Standards....4
4.0 Requirements....4
ANNEXURE A-TECHNICAL COMPARISON DATA SHEET FOR INSULATION Mat-11 kV....4
5.0 Workmanship And Finish:....8
8. Inspection:....8
9. Deviation....8

1.0 Scope of Supply

1.1 The specification covers the design, manufacturing, inspection, testing & supply of safety helmet with sensor

1.2 Design, Engineering, Manufacturer, Assembly, Inspection, testing at manufacturer works before dispatch Packing, delivery of material to BRPL stores and submission of documents to purchaser.

2.0 Service Condition

The Insulating Mat to be supplied against this specification shall be suitable for satisfactory continuous operation under outdoor environment. Following are the climatic condition:

Sl.no	Parameters	Requirements
i.	Peak ambient temp.	55°C
ii.	Min ambient temp. in shade	45°C
iii.	Max. average ambient temp in 24 hours period in shade	40°C
iv	Min ambient temp.	(-)5°C
v	Max. temp. attainable by an object exposed to sun	70°C
vi	Max. relative humidity	95%
vii	Average number of thunder storm days per annum	40
viii	Average number of rainy storm days per annum	120
ix	Average annual rainfall	1250mm
x	No of months of tropical monsoon condition	4 months
xi	Max. wind pressure	150kg/m2
xii	Altitudes	Not exceeding 1000mtrs

The Insulating Mat shall also be for use in moderately hot and humid tropical climate, conducive to rust and fungus growth.

3.0 Applicable Standards

Following Indian/International Standards, which shall mean latest revision, with amendments/changes adopted and published, unless specifically stated otherwise in the Specification, shall be referred while accessing conformity of Lineman safety helmets with sensor

In the event of supply of insulating mat confirming to Standards other then specified, the bidder shall confirm in his bid that these standards are equivalent or better to those specified. In case of award, salient features of comparison between the standards proposed by the bidder and those specified in this document will be provided by the supplier to establish equivalence.

Sl. no.	Product name	Standard	Title
1	Insulating Mat	IS 15652 : 2006	Synthetic **Insulating Mat**- Confirming
2		IS 5424 (cold standard)	superseded the rubber **mat**
3		IS 8002/IEC 61111	
4		IEC 479	

4.0 Requirements

ANNEXURE A-TECHNICAL COMPARISON DATA SHEET FOR INSULATION Mat-11 kV

Annexure A-Technical Comparison Data Sheet For Insulation Mat-11 Kv			
Sl No.	Descriptions	BRPL Requirement	Vendor Data
1	Purchase Req. No		
2	Guarantee Period (Min)	5 years	
3	Applicable IS/IEC Standard to be followed by Vendor	IS 15652:2006, IS 8002/IEC 61111, IEC 479	

Annexure A-Technical Comparison Data Sheet For Insulation Mat-11 Kv			
Sl No.	Descriptions	BRPL Requirement	Vendor Data
4	Make	Vendor Name	
5	Material	Dielectric Elastomer	
6	Colour	Blue/Black	
7	Type	Pastable Type, gas welding with filler material type (IS:8002)	
8	Surface	Abrasions to be provided on upper surface to mat to make surface Anti-skid	
9	Voltage Grade	3.3 KV, 11 KV, 33 KV	
10	Suitable for AC/DC	AC/DC	
11	Thickness	3 mm for 11KV & 33 KV	
12	Width	1 mtr. (min)	
13	Length	5 mtrs for 11/33 KV	
14	Tensile Strength (N/Sqmm)	15 N/Sqmm upto 33 KV	
15	Elongation (%)	250 (min) upto 33 KV	
16	Insulation Resistance with Water at 500 V	1,000,000 M ohm up to 33 KV	
17	Leakage Current at 11 KV (mAmp)	10 (max)	
18	AC Di Electric Strength	45 KV (min) for 11KV	
19	Flame Retardance	Fire Retardant, fire self-extinguish within 5 seconds	
20	Working Temparature	-10°C to +60°C.	

Annexure A-Technical Comparison Data Sheet For Insulation Mat-11 Kv			
Sl No.	Descriptions	BRPL Requirement	Vendor Data
21	Low Temperature Resistamce	No Tear, Break or Crack is Observed in Mats Under Force of 100 N for 1 Hrs. at -10+- 3°C	
22	Effect to Various Medium		
a	Acid		
i	Tensile Strength (N/Sqmm)	Not Less than 80% of Changes from Original Value	
ii	Elongation (%)	Not Less than 80% of Changes from Original Value	
b	Alkali		
i	Tensile Strength (N/Sqmm)	Not Less than 80% of Changes from Original Value	
ii	Elongation (%)	Not Less than 80% of Changes from Original Value	
c	Diesel		
i	Tensile Strength (N/Sqmm)	Not Less than 80% of Changes from Original Value	
ii	Elongation (%)	Not Less than 80% of Changes from Original Value	
d	Transformer Oil		
i	Tensile Strength (N/Sqmm)	Not Less than 80% of Changes from Original Value	
ii	Elongation (%)	Not Less than 80% of Changes from Original Value	
e	Ageing Properties at 70+-1 °C for 168 Hrs		
i	Tensile Strength (N/Sqmm) after Ageing	Not Less than 75%of Changes from Original Value	
ii	Elongation (%) after Ageing	Not Less than 75% of Changes from Original Value	

Annexure A-Technical Comparison Data Sheet For Insulation Mat-11 Kv			
Sl No.	Descriptions	BRPL Requirement	Vendor Data
23	Class-C for 3 mm thickness		
i	Working Voltage	11 KV	
ii	Proof Voltage (for 180 sec)	36 KV max	
ii	Break Down Votage	65 KV (max) AC RMS	
24	Embossing	Anti-Skid without metallic derivatives with Chips/without Chips.	
25	Marking	Every meter of mat should be marked with respective Class symbol, Lot No. or Batch number and Manufacturer's Identity or Brand name, Mat Tested & Stamped to IS:15652-06 and ISI mark, BSES Mark, PO no, date of manufacturing, Length of Mat.	
26	Packing	Packed in Gunny bags of Jute/Hessian cloth to avoid mechanical damage to the material in transit.	

5.0 Workmanship And Finish:

One side plain and other side pattern.

6. Inspection:

Manufacturer shall intimate the manufacturing schedule in advance. The manufacturer shall give minimum 15 days advance notice about readiness of material at their works. The material shall be inspected for conformity with BRPL specification before the same is accepted.

8.1 Certificates required
8.2 Manufacturing certificates
8.3 Test certificates
8.3 Authorization of dealership/ distribution ship

7. Deviation

Deviation from this specification is only acceptable in cases where the bidder has submitted deviation list along with the technical bid. It may also be noted that the deviation can only be accepted by BRPL in case it does not hamper the basic purpose of safety helmets with sensor

In the absence of a list of deviations, it will be assumed by Buyer that the seller complies fully with this specification.

BSES

Technical Specification

Of

Conventional Oil filled Distribution Transformer

Specification no – BSES-TS-12-TRDU-R0

Rev:		0
Date:		01 Apr 2022
Prepared by	Vani Sood / Pronab Bairagi	
	Abhishek Harsh	
Reviewed by	Srinivas Gopu	
	Amit Tomar	
Approved by	Gaurav Sharma	
	K. Sheshadri	

INDEX

Record of Revision....3

1.0 Scope of Supply....4

2.0 Codes & standards....4

4.0 Construction & Design....10

5.0 Fittings and Accessories on Transformer....24

6.0 Approved make of components....28

7.0 Quality assurance....28

8.0 Progress Reporting....30

9.0 Inspection & testing....30

10.0 Packing , Shipping, Handling and Storage....37

11.0 Deviations....38

12.0 Drawings& Data Submission Matrix....38

Annexure A Scope of supply....40

Annexure B Service Conditions....41

Annexure C Technical Particulars of transformer oil....43

Annexure D Manufacturing Quality Assurance Plan....45

Schedule A Guaranteed Technical Particulars (Data by Seller)....70

Schedule B Guaranteed Technical Particulars of Transformer Oil....79

Schedule C Recommended Spares (Data by Seller)....82

Record of Revision

SI No.	Revision No	Item/Clause No.	Nature of change	Approved by

1.0 Scope of Supply

For scope of supply, refer annexure – A.

2.0 Codes & standards

a) Materials, equipment and methods used in the manufacture of Transformer shall conform to the latest edition of below mentioned standards.

b) Vendor shall possess valid BIS Certification.

IS 1180	Outdoor type oil immersed distribution transformer upto and including 2.5MVA,33kV
IS 2026	Power Transformers
IS 2026-4	Terminal Marking, tappings and Connections for Power Transformers.
IS:3347	Dimensions for Porcelain Transformer bushing
IS:3637	Gas operated relays
IS:3639	Fitting & Accessories for power transformers
IS:4201	Application guide for CT's
IS:8478	Application guide for On-load tap changer
IS:10028	Code of practice for selection, installation & maintenance of transformers
IS 5561	Electrical Power Connectors
IS 5	Colors for ready mix paints
IS:335	Insulating oil
IS 6272	Industrial cooling fans
IS 12615	Three phase induction motors
IS/IEC 60034	Rotating Electrical Machines. (e.g. For Cooler Fan Motors.)
IS/IEC 60071	Co-ordination of Insulation.
IS 16227/IEC 61869	Current Transformers.
IS 8468/ IEC 60214	On Load Tap Changers
IS2026-7/IEC 60076-7	Loading Guide for Oil-Immersed Power Transformers.
IS 2026-8 /IEC 60076-8	Application Guide for Power Transformers.
IS 2026-10/IEC 60076-10	Determination of Transformer Sound Levels.

IS/IEC 60529	Degrees of Protection Provided by Enclosures (IP Code).
IS/IEC 60947	Low-Voltage Switchgear and Control gear.
IS/IEC 60137	Bushing for alternating voltage above 1000V
IS:1271/IEC 60085	Thermal evaluation and classification of electrical insulation
IEC 60076	Power transformers.
IEC 60156	Method for Determination of the Electric Strength for Insulating Oils.
IEC 60296	Specification for Unused Mineral Insulating Oils for Transformers and Switchgear.
IEC 60445	Basic& Safety principles for man-machine interface, marking and identification, Identification of Equipment Terminals and conductor terminals
BS 148	Determination of Transformer and Reactor Sound Levels.
BS 223	Application Guide for Power Transformers.
BS 2562	Terminal and Tapping Markings for Power Transformers.
	Indian Electricity Rules
	Indian Electricity Act
	CBIP manual

In the event of direct conflict between various order documents, the precedence of authority of documents shall be as follows -

i. Guaranteed Technical Particulars (GTP)

ii. This Specification

iii Indian Standards / IEC standards

iv Approved Vendor Drawings

iv. Other documents

3.0 Major Design Criteria & Parameters of the Transformer

Sr No	Description	Data by purchaser
3.1	Voltage variation on supply side	+ / - 10 %
3.2	Frequency variation on supply side	+/ - 5 %
3.3	Transient condition	- 20 % or + 10 % combined variation of voltage and frequency
3.4	Service Condition	Refer Annexure B

3.5	Insulation level	Class A
3.6	Location of equipment	Generally Outdoor but may be located indoor also with poor ventilation
3.7	Reference design ambient temperature	50 deg C
3.8	Type	Oil immersed, core type, step down
3.9	Type of cooling	ONAN
3.10	Reference standard	IS 2026/IS 1180
3.11	No. of phases	3
3.12	No. of windings per phase	2
3.13	Rated frequency (Hz)	50 Hz
3.14	Highest system voltage HV side	12 kV
3.15	Highest system voltage LV side	460 volt
3.16	Lightning Impulse withstand voltage , kV peak	
3.16.1	For nominal system voltage of 11 kV	75
3.17	Power Frequency Withstand Voltage kV rms	
3.17.1	For nominal system voltage of 11 kV	28
3.17.2	For nominal system voltage of 415 V	3
3.18	Clearances Phase to Phase , mm	
3.18.1	For nominal system voltage of 11 kV	180
3.18.2	For nominal system voltage of 415 V	25
3.19	Clearances Phase to Earth , mm	
3.19.1	For nominal system voltage of 11 kV	120
3.19.2	For nominal system voltage of 415 V	25
3.20	System Fault Level , HV side	350 MVA
3.21	System Fault Level , LV side	35 MVA
3.22	System earthing	
3.22.1	HV	Solidly earthed
3.22.2	LV	Solidly earthed
3.23	Ratings	250/400/630/1000/1600/2000 kVA

3.24	Percentage Impedance at 75 deg C	
3.24.1	250/400/630 kVA	4.5 % with IS tolerance
3.24.2	1000 kVA	5.0 % with IS tolerance
3.24.3	1600/2000 kVA	6.25% with IS tolerance
3.25	Max Total losses(No Load+ Load Losses at 75ºC) at 50% of the rated load , kW	
3.25.1	250 kVA	0.98
3.25.2	400 kVA	1.225
3.25.3	630 kVA	1.86
3.25.4	1000 kVA	2.79
3.25.5	1600 kVA	4.2
3.25.6	2000 kVA	5.05
3.26	Max Total losses(No Load+ Load Losses at 75ºC) at 100% of the rated load , kW	
3.26.1	250 kVA	2.93
3.26.2	400 kVA	3.45
3.26.3	630 kVA	5.3
3.26.4	1000 kVA	7.7
3.26.5	1600 kVA	11.8
3.26.6	2000 kVA	15
3.27	Phase CT Ratio , Amp	
3.27.1	250 kVA	400/5
3.27.2	400 kVA	600/5
3.27.3	630 kVA	1000/5
3.27.4	1000 kVA	1500/5
3.27.5	1600 kVA	2500/5
3.27.6	2000 kVA	3000/5
3.28	HV cable size for all sizes / Conductor size	11 kV (E) grade , A2XCEWY 3C x 150 sqmm

3.29	Busbar size on HV side for cable termination, mm x mm	50x10-Aluminium/Tinned Copper
3.30	LV cable size, 650 /1100 V grade , A2XY cable single core 630 sqmm unarmoured (approx cable dia 40 mm)/ A2XY Cable single core 1000sqmm(Approx dia. 48mm)	Cable
3.30.1	250 kVA	1 runs per phase + 1 runs in Neutral
3.30.2	400 kVA	2 runs per phase + 2 runs in Neutral
3.30.3	630 kVA	3 runs per phase + 2 runs in Neutral
3.30.4	1000 kVA	4 runs per phase + 3 runs in Neutral
3.30.5	1600 KVA	6 runs per phase + 3 runs in Neutral-single core 630 sqmm 3 runs per phase + 2 runs in Neutral-single core 1000 sqmm
3.30.6	2000 kVA	7 runs per phase + 4 runs in Neutral-single core 630 sqmm 4 runs per phase + 3 runs in Neutral-single core 1000 sqmm
3.31	Busbar size on LV side for cable termination, mm x mm	
3.31.1	250/400/630 kVA	
3.31.1.1	Phase	100 x 12-Tinned Copper/Alumium
3.31.1.2	Neutral	100 x 12-Tinned Copper/Alumium
3.31.2	1000kVA	
3.31.2.1	Phase	100 x 12-Tinned Copper 2 runs 100 x 12-Aluminium
3.31.2.2	Neutral	100 x 12-Tinned Copper 2 runs 100 x 12-Aluminium
3.31.3	1600kVA	
3.31.3.1	Phase	160 x 12-Tinned Copper 2 runs 160 x 12-Aluminium

3.31.3.2	Neutral	160 x 12-Tinned Copper 2 runs 160 x 12-Aluminium
3.31.4	2000kVA	
3.31.4.1	Phase	2 runs 100 x 12-Tinned Copper 2 runs 160 x 12-Aluminium
3.31.4.2	Neutral	2 runs 100 x 12-Tinned Copper 2 runs 160 x 12-Aluminium
3.32	Maximum Overall Dimension Acceptable (length x width x height), mm x mm x mm	
3.32.1	250 KVA	1500 x1300x 1700
3.32.2	400 kVA	1500X1500X2000
3.32.3	630 kVA	1700X1700X2200
3.32.4	1000 kVA	1900X1900X2500
3.32.5	1600 kVA	2300X2000X2600
3.32.6	2000 kVA	2500X2000X2600
3.33	Short Circuit withstand Capacity of the transformer	
3.33.1	Three phase dead short circuit at secondary terminal with rated voltage maintained on the other side	For 3 secs.
3.33.2	Single phase short circuit at secondary terminal with rated voltage maintained on other side	For 3 secs.
3.34	Overload Capability	As per IS 2026/IEC 60905
3.35	Noise Level	400/630/1000/1600/2000 KVA- 56/57/58/60/61 Db respectively
3.36	Radio Influence Voltage	Maximum 250 microvolt

3.37	Harmonic suppression	Transformer to be designed for suppression of 3rd, 5th, 7th harmonic voltages and high frequency disturbances.
3.38	Partial Discharge	Transformer to be free from partial discharge upto 120 % of rated voltage as the voltage is reduced from 150 % of rated voltage i.e. there shall be no significant rise above background level
3.39	Tappings	Off Circuit taps on HV winding , +10% to - 10% in steps of 2.5 % , change of taps by externally operated switch
3.39.1	Rotary tap switch operating voltage	11 kV
3.39.2	Rotary tap switch current rating, Amp.	
3.39.2.1	250 KVA	20 Amps
3.39.2.2	400 kVA	60 Amp
3.39.2.3	630 / 1000 kVA	100 Amp
3.39.2.4	1600/2000 kVA	150 Amp

4.0 Construction & Design

4.1	Type	Double Copper wound, three phase, oil immersed, with ONAN cooling, with off circuit tap changer
4.2	**Major Parts**	
4.2.1	**Tank**	
4.2.1.1	Type	Non sealed type with conservator as per manufacturer's standard.
4.2.1.2	Material of Construction	Robust mild steel plate without pitting and low carbon content
4.2.1.3	Plate Thickness	Adequate for meeting the requirements of pressure and vacuum type tests as per IS
4.2.1.4	Welding features	i) All seams and joints shall be

		double welded ii) All welding shall be stress relieved for sheet thickness greater than 35 mm iii) All pipes, radiators, stiffeners, welded to the tank shall be welded externally
4.2.1.5	Tank features	i) Adequate space at bottom for collection of sediments ii) Stiffeners provided for rigidity and designed to prevent accumulation of water iii) No internal pockets in which gas/air can accumulate iv) No external pocket in which water can lodge v) Tank bottom with welded skid base vi) Tank cover sloped to prevent retention of rain water vii) Minimum disconnection of pipe work and accessories for cover lifting viii) Tanks shall be of a strength to prevent permanent deformation during lifting , jacking, transportation with oil filled. ix) Tank to be designed for oil filling under vacuum x) Tank cover fitted with lifting lug xi) Tank cover bent at all the ends xii) Minimum disconnection of pipe work and accessories for cover lifting
4.2.1.6	Flanged type adequately sized	i) HV line bushing

	inspection cover rectangular in shape required for	ii) LV line bushing iii) LV neutral bushing iv) Core / Winding
4.2.1.7	Fittings and accessories on main tank	See under fittings and accessories.
4.2.2	**Conservator for the main tank**	
4.2.2.1	Capacity	Adequate between highest and lowest visible levels to meet the requirement of expansion of oil volume in the transformer and cooling equipment from minimum ambient temperature to maximum operating temperatures.
4.2.2.2	Conservator oil preservation system	Conventional
4.2.2.3	Conservator features	i) Conservator shall be bolted into position so that it can be removed for cleaning / other maintenance purposes ii) Main pipe from tank shall project about 20 mm above conservator bottom for creating a sump for collection of impurities iii) Conservator minimum oil level corresponding to minimum temperature shall be well above the sump level. iv) Conservator to main tank piping shall be supported at minimum two points.

4.2.2.4	Fittings and accessories on main tank conservator	i) Prismatic oil gauge with MINIMUM, NORMAL and MAXIMUM marking ii) End Cover iii) Oil Filling Hole with cap iv) Silica Gel Dehydrating Breather with oil seal and dust filter with clear acrylic single piece clearly transparent cover resistant to UV rays(1kg). Breather shall be of Flanged type in circular shape with 4 no.holes of ½ inches with hardware of M10 bolts. Silica gel shall be of round ball type of 2.5mm dia. v) Drain Plug vi) Air release plug as required vii) Pressure/ Vacuum gauge viii) Magnetic Oil Gauge with LOW LEVEL ALARM
4.2.3	**Radiators**	Detachable type
4.2.3.1	Thickness	Minimum 1.2 mm
4.2.4.2	Features	With lifting lugs, air release plug,
4.2.5	**Core**	
4.2.5.1	Material	High grade , non ageing, low loss, high permeability, grain oriented, cold rolled silicon steel lamination. Core shall be low loss of 1Watt/kG (max)
4.2.5.2	Grade	Premium Grade minimum M3 or better
4.2.5.3	Lamination thickness	0.23 mm Max.
4.2.5.4	Design Flux Density at rated conditions at principal tap	As per Manufacturer design.
4.2.5.5	Maximum Flux Density at 12.5 % over	1.9 T

	excitation / over fluxing	
4.2.5.6	Core Design Features	i) Core shall be in the form of step and stack in three limb format. Note: Wound core shall not be acceptable ii) Magnetic circuit designed to avoid short circuit paths within core or to the earthed clamping structures iii) Magnetic circuit shall not produce flux components at right angles to the plane of lamination to avoid local heating iv) Least possible air gap and rigid clamping for minimum core loss and noise generation v) Adequately braced to withstand bolted faults on secondary terminals without mechanical damage and damage/ displacement during transportation and positioning. vi) Percentage harmonic potential with the maximum flux density under any condition limited to avoid capacitor overloading in the system vii) All steel sections used for supporting the core shall be thoroughly sand blasted after cutting , drilling, welding viii) Provision of lifting lugs for core coil assembly ix) Supporting framework designed not to obstruct complete drainage of oil from transformer

4.2.6	**Winding**	
4.2.6.1	Material	Electrolytic Copper
4.2.6.2	Maximum Current Density allowed	3 Amp per sq mm at all taps.
4.2.6.3	Winding Insulating material	Class A , non catalytic, inert to transformer oil, free from compounds liable to ooze out, shrink or collapse.
4.2.6.4	Winding Insulation	Uniform
4.2.6.5	Design features	i) Type of winding a. LV: Sprial/Helical b. HV: Crossover/Disc Note: Foil winding shall not be acceptable ii) Stacks of winding to receive adequate shrinkage treatment iii) Connections braced to withstand shock during transport, switching, short circuit, or other transients. iv) Minimum out of balance force in the transformer winding at all voltage ratios. v) Conductor width on edge exceeding six times its thickness vi) Transposed at sufficient intervals. vii) Coil assembly shall be suitably supported between adjacent sections by insulating spacers + barriers viii) Winding leads rigidly supported , using guide tubes if practicable ix) Winding structure and major insulation not to obstruct free flow of oil through ducts x) Provision of taps as per clause 3.39

4.2.7	**Transformer Oil**	
4.2.7.1	Type	Should be in accordance with specification as per Annex C of this document
4.2.8	**Bushings and Terminations**	
4.2.8.1	Type of HV side bushing	HV bushing should be top mounted. Outdoor, Pocelain, rated voltage and creepage as per 31mm/kV with voltage class of 12kV respectively
4.2.8.2	Type of LV side bushing	LV bushing should be top mounted. Outdoor, Porcelain, rated voltage and creepage as per 31mm/kV with voltage class of 1.1 kV respectively Additional neutral bushing of porcelain outside on top of LT cable box with brass palm connector (as per IS 3347) shall be provided. Connection between the main neutral and additional neutral shall be provided. For extra neutral bushing, protection box shall be provided in order to prevent ingress of water.
4.2.8.2.1	Essential provision for LV side line bushing	It shall be complete with copper palm complete with tinned copper busbar of size shall be as per clause 3.31.
4.2.8.2.2	Essential provision for LV side neutral bushing	In case of neutral bushing the stem and busbar shall be integral without bolted, threaded, brazed joints. Busbar size shall be as per clause 3.31
4.2.8.3	Arcing Horns	Not required
4.2.8.4	Support insulators inside HV cable box if provided	Epoxy resin cast, rated voltage 12 kV
4.2.8.5	Termination on HV side bushing	By bimetallic terminal connectors

		suitable for ACSR/AAAC conductor / Cable connection through cable box with disconnecting link suitable for 11kV(E) grade,A2XFY 3Cx 150sqmm
4.2.8.6	Termination of LV side bushing	By bimetallic terminal connectors suitable for LV Cable size of 650/1100VGrade, A2XY Cable single core 630sqmm (Approx dia 40mm) / A2XY Cable single core 1000sqmm (Approx dia. 48mm) for 1600/2000 KVA.
4.2.8.7	Minimum creepage distance of all bushings and support insulators.	31mm/KV
4.2.8.8	Protected creepage distance	At least 50 % of total creepage distance
4.2.8.9	Continuous Current rating	Minimum 20 % higher than the current corresponding to the minimum tap of the transformer
4.2.8.10	Rated thermal short time current	25 times the rated current for 2 sec
4.2.8.11	Atmospheric protection for clamp and fitting of iron and steel	Hot dip galvanizing as per IS 2633
4.2.8.12	Bushing terminal lugs in oil and air	Tinned copper
4.2.8.13	Sealing washers /Gasket ring	Nitrile cork rubber(RC70C)/ Expanded TEFLON(PTFE) as applicable.
4.2.9	**HV & LV cable box**	Required
4.2.9.1	Material of Construction	Sheet Steel min. 2.5 mm thick
4.2.9.2	Cable entry	At bottom through detachable gland plate with cable clamps of non magnetic material
4.2.9.3	Cable size for HV	11 kV (E) grade , A2XFY 3C x 150 sqmm
4.2.9.4	Cable size for LV	LV cable size, 650 /1100 V grade, A2XY cable single core 630 sqmm

		unarmoured (approx cable dia 40 mm) / A2XY Cable single core 1000sqmm (Approx dia. 48mm) for 1600/2000 KVA.
4.2.9.5	Cable size for LV Neutral	LV cable size, 650 /1100 V grade, A2XY cable single core 630 sqmm unarmoured (approx cable dia 40 mm) / A2XY Cable single core 1000sqmm (Approx dia. 48mm) for 1600/2000 KVA.
4.2.9.6	Detachable Gland Plate material for HV, LV, LV Neutral box	i) MS for HV cable box ii) Al for LV cable box.
4.2.9.7	Gland plate thickness for HV, LV, LV Neutral box	i) 3 mm for HV side cable box ii) 5 mm for LV cable box.
4.2.9.8	Cable gland for HV cables	Nickel plated brass double compression weatherproof cable gland
4.2.9.9	Cable lug for HV, LV, LV Neutral cables	i) Double hole Aluminium lugs for LV & Neutral side ii) Single hole Aluminum lugs for HV side
4.2.9.10	Essential parts	i) Flange type removable front cover with handles min two nos. ii) Tinned Copper Busbar of adequate size for Purchaser's cable termination with busbar supports iii) Earthing boss for the cable box iv) Earthing link for the gasketted joints at two point for each joint v) Earthing provision for cable Armour/ Screen vi) Flanged type inspection cover on top for bushing inspection and maintenance with handle vii) Drain plug viii) Rainhood on gasketted vertical joint ix) Danger / caution plate

4.2.9.11	Terminal Clearances	700mm, Minimum
4.2.9.12	Termination height required for cable termination	1000mm, Minimum
4.2.10	**Current Transformers**	
4.2.10.1	Provision	On all three phases on LV side
4.2.10.2	Mounting	On LV side bushings on all three phases with the help of fibre glass mounting plate affixed to main tank by nut bolt arrangement
4.2.10.3	Maintenance requirements	Replacement should be possible by removing fixing nut of mounting plate after removal of LT cable without disturbing LT bushing
4.2.10.4	Accuracy Class	0.5
4.2.10.5	Burden	10VA
4.2.10.6	Type	Resin Cast Ring type suitable for outdoor use.
4.2.10.7	CT ratio	
	250 KVA	400/5
	400kVA	600/5
	630kVA	1000/5
	1000kVA	1500/5
	1600kVA	2500/5
	2000kVA	3000/5
4.2.10.8	**CT terminal Box**	
4.2.10.8.1	Size	650 mm height x 750 mm width x 275 mm depth.
4.2.10.8.2	Fixing of instrument / meters within box	On slotted channel 40 x 12 mm size, channel fixed on vertical slotted angle 40 x 40 mm size at two ends
4.2.10.8.3	No of horizontal channels to be provided	Four
4.2.10.8.4	Fixing of terminals within the box	On horizontal slotted channel with the

		help of C channel available with the terminals
4.2.10.8.5	Location	On tank wall
4.2.10.8.6	Box door design	Openable from outside with antitheft hinge, padlock facility, door fixed by stainless steel allen screw M6 size , door shall have canopy for rain protection
4.2.10.8.7	Terminal strip	Nylon 66 material, minimum 4 sq mm, screw type for control wiring and potential circuit.
4.2.10.8.8	Cables and wires	PVC insulated, extruded PVC inner sheathed, armoured, extruded PVC outer sheathed 1100 V grade control cable as per latest edition of IS 1554 part 1 minimum 2.5 sq mm for signals and 4 sq mm for CT with multi strand copper conductor
4.2.10.8.9	Cable Glands	Nickel plated brass double compression weatherproof cable gland
4.2.10.8.10	Lugs on wires	Tinned copper pre insulated Pin, Ring, Fork type as applicable
4.2.10.8.11	Potential signal in CT box	i) Tapped from main LV busbar ii) Neutral Link and Fuse to be provided by bidder for PT
4.2.10.8.12	Essential provision	Wiring diagram to be fixed on the back of door along with CT spec. on Aluminum engraved plate fixed by rivet.
4.2.11	**Off Circuit tap Switch**	
4.2.11.1	Range /Step	Off circuit taps on HV winding, +10% to -10% in steps of 2.5%, change of taps by externally operated switch.
4.2.11.2	Type	Rotary type, 3 pole gang operated,

		draw out type
4.2.11.3	Operating Voltage	11kV
4.2.11.4	Rated Current for tap Switch	i) 400 kVA - 60 Amps ii) 630/1000 kVA - 100 Amps iii) 1600/2000kVA-150 Amps
4.2.11.5	Operating Handle	External at suitable height to be operated from ground level.
4.2.11.6	Essential provision	Tap position indicator, direction changing facility, locking arrangement, and caution plate metallic fixed by rivet.
4.2.12	**Pressure Relief Device**	
4.2.12.1	Type	Pressure Relief Valve (PRV)
4.2.12.2	Auxiliary contacts	2 NO
4.2.13	**Winding and Oil Temperature scanner**	Required
4.2.13.1	PT 100 sensor	For measurement of Oil temperature LV winding temperature.
4.2.13.2	No of potential free trip contacts	2 NO
4.2.13.3	No of potential free alarm contacts	2 NO
4.2.13.4	Auxiliary Supply	240 AC, Single phase, 50Hz. Tapped from LV side busbar through a MCB located inside box.
4.2.13.5	Communication port	RS 485 port for interfacing with FRTU on Modbus protocol. Battery/Super capacitor for data transmission to SCADA in the event of Auxiliary supply fail
4.2.13.5	Fixing of instrument	On side wall of tank
4.2.14	**Auxiliary Relay (hand reset type)**	Required to identify the type of fault/indication.
4.2.14.1	Quantity	4 no's Separate auxiliary relay to be provided for PRV, MOG,WTI/OTI,

		Buchholz relay.
4.2.14.2	Potential free contacts	2 NO
4.2.14.3	Auxiliary supply	240V AC
4.3	**Hardware**	
4.3.1	External	Hot dip galvanized bolts
4.3.2	Internal	Cadmium plated except special hardware for frame parts and core assembly as per manufacturer's design
4.4	**Gasket**	
4.4.1	For Transformer , surfaces interfacing with oil like inspection cover etc.	Nitrile cork rubber RC70C grade
4.4.2	For Cable boxes, Marshalling box, etc.	Neoprene rubber based/ cork nitrile
4.5	**Valves**	
4.5.1	Material of construction	Brass / gun metal
4.5.2	Type	Both end flanged gate valve / butterfly valve depending on application
4.5.3	Size	As per manufacturer's standard
4.5.4	Essential provision	Position indicator, locking rod, padlocking facility, valve guard, cover plate.
4.6	**Cable routing on Transformer**	Control cables for accessories on transformer tank shall be routed through perforated GI trays
4.6.1	Control cable specification	PVC insulated, extruded PVC inner sheathed, armoured, extruded PVC outer sheathed 1100 V grade control cable as per latest edition of IS 1554 part 1 minimum 2.5 sq mm for signals and 4 sq mm for CT with multi strand copper conductor
4.6.2	Specification of wires to be used inside marshalling box.	PVC insulated multi-strand flexible copper wires of minimum 2.5 sq mm size, 1100 V grade as per latest edition

		of relevant IS
4.7	**Terminal Blocks to be used by the vendor**	Nylon 66 material, minimum 4 sq mm, Stud type screw driver operated type for control wiring and potential circuit.
4.7.1	Essential provision for CT terminals	Sliding link type disconnecting terminal block Stud type screwdriver operated with facility for CT terminal shorting material of housing melamine/ Nylon66
4.8	**Cable glands to be used by the vendor**	Nickel plated brass double compression weatherproof cable gland
4.9	**Cable lugs to be used by the vendor**	
4.9.1	For power cables	Long barrel medium duty Aluminium lug with knurling on inside surface.
4.9.2	For Control Cable	Tinned copper pre insulated Pin, Ring, Fork type as applicable
4.10	**Painting of transformer, Radiator, marshalling box for CT, cable boxes etc.**	
4.10.1	Surface preparation	By 7 tank pretreatment process or shot blasting method
4.10.2	Finish on internal surfaces of the transformer	Bright Yellow heat resistant and oil resistant paint two coats. Paint shall neither react nor dissolve in hot transformer insulating oil.
4.10.3	Finish on inner surface of the CT terminal box, HV/LV/LVN cable box	White Polyurethane paint anti condensation type two coats , minimum dry film thickness 80 microns
4.10.4	Finish on outer surface of the transformer, radiator, CT terminal box, HV/LV/LVN cable box	Battle ship Grey shade 632 Polyurethane paint two coats, minimum dry film thickness 80 microns
4.10.5	Frame parts	Battle ship grey shade 632 IS 5, 80 micron minimum insulating oil resistant

		paint. Paint shall neither react nor dissolve in hot transformer insulating oil.

5.0 Fittings and Accessories on Transformer

5.1	Rating and Diagram Plate	Required
5.1.1	Material	Anodized aluminum 16SWG
5.1.2	Background	SATIN SILVER
5.1.3	Letters, diagram & border	Black
5.1.4	Process	Etching
5.1.5	Rating and Diagram Plate details	Following details shall be provided on rating and diagram plate as a minimum i) type/kind of transformer with winding material ii) standard to which it is manufactured iii) manufacturer's name; iv) transformer serial number; v) month and year of manufacture vi) rated frequency in Hz vii) rated voltages in kV viii) number of phases ix) rated power in kVA x) type of cooling (ONAN) xi) rated currents in A xii) vector group connection symbol xiii) 1.2/50µs wave impulse voltage withstand level in kV xiv) power frequency withstand voltage in kV xv) impedance voltage at rated current and frequency in percentage at principal, minimum and maximum tap xvi) Max. Total losses at 50 % rated

		load xvii) Max. Total losses at 100 % rated load xviii) Load loss at 50% & 100% rated load xix) No-load loss at rated voltage and frequency xx) Energy efficiency level. xxi) continuous ambient temperature at which ratings apply in deg C xxii) top oil and winding temperature rise at rated load in deg C; xxiii) winding connection diagram with taps and table of tapping voltage, current and power xxiv) transport weight of transformer xxv) weight of core and windings xxvi) Weight of core xxvii) Weight of winding xxviii) total weight xxix) volume of oil xxx) weight of oil xxxi) name of the purchaser xxxii) PO no and date xxxiii) Guarantee period
5.2	Terminal marking Plate for Bushing, anodized aluminium black lettering on satin silver background both inside cable boxes near termination and on cable box cover (all fixed by rivet)	Required
5.3	Company Monogram Plate fixed by rivet	Required
5.4	Lifting Lug to lift complete	Required

	transformer with oil	
5.5	Lifting lug for top cover	Required
5.6	Lashing Lug	Required
5.7	Jacking Pad with Haulage hole to raise or lower complete transformer with oil	Required
5.8	Detachable Bidirectional flat roller Assembly	Required
5.8.1	Roller center to center distance	Minimum 900 mm on the side of HV and LV cable box Maximum 800 mm on the other side (perpendicular to HV, LV cable box).
5.8.2	Essential provision	Roller dia 150 mm min., roller to be fixed in such a way so that the lowermost part of the skid is above ground by at least 100 mm when the transformer is installed on roller.
5.9	Pockets for ordinary thermometer on tank cover with metallic identification plate fixed by rivet.	Required
5.10	Drain valve (gate valve) for the main tank with cork above ground by 150mm minimum with padlocking and valve guard with metallic identification plate fixed by rivet.	Required
5.11	Filter valve (gate valve) at top with padlocking and valve guard with metallic identification plate fixed by rivet.	Required
5.12	Air Release Plug on tank cover with metallic identification plate fixed by rivet.	Required
5.13	Earthing pad on tank for	Required

	transformer earthing complete with non ferrous nut ., bolt, washers, spring washers etc. with metallic identification plate fixed by rivet	
5.14	Rainhood for vertical gasketted joints , in cable boxes, Conservator	Required Not required as per Annexure A Scope of supply
5.15	Earthing bridge by copper strip jumpers on all gasket joints at at least two points for electrical continuity	Required
5.16	Skid base welded type with haulage hole	Required
5.17	Core , Frame to tank Earthing	Required
5.18	Danger plate made of Anodized aluminum with white letters on red background on Transformer, cable boxes (all fixed by rivet)	Required
5.19	Caution plate for Off Circuit tap changer fixed by rivet.	Required
5.20	MOG with auxiliary contact wired upto Terminal Box	Required
5.21	Buchholz relay for transformer above 1000kVA	Required
5.22	Pressure relief valve	Required
5.23	WTI & OTI Temperature Scanner	Required
5.24	Auxiliary relays (4 no's)	Required
5.25	LT cable support-By aluminium clamp fixed on the on MS bracket of size 50x 10 supported from the tank wall shall be provided .	Required
5.26	HT cable support-By GI clamp fixed on the on MS bracket of size 50x 10 supported from the tank wall shall	Required

	be provided.	

6.0 Approved make of components

6.1	CT	Pragati / ECS / Kappa/Mehru/Continental/Nortex
6.2	Bushings	Baroda Bushing/Jaipur glass/CJI
6.3	Tap Changer	Alwaye /Paragon
6.4	MOG	Sukrut/Atvus
6.5	Valves	Newman/ATAM
6.6	CRGO	Nippon/JFE/Posco/Thyson kkurup
6.7	Copper	Birla copper/Sterlite
6.8	Pre compressed Pressboard	Raman Board, Mysore/ Senapathy Whiteley
6.9	Laminated Wood	Permalli Wallance / Rochling Engineers
6.10	Oil	Apar/Savita/Raj Petro/Gandhaar
6.11	Steel	TATA/Jindal/SAIL
6.12	Lugs/Glands	Jainson/Dowells/Comet
6.13	Radiators	CTR/Hi-Tech Radiators /Tarang Engineers
6.14	WTI/OTI	Precimeasure/ Pecon
6.15	Buchholz Relay	Sukrut/Atvus
6.16	Auxiliary Relay	GE/Alstrom

Note – Any other make of component offered by the bidder maybe reviewed & approved by purchaser

7.0 Quality assurance

7.1	Quality Assurance program	To be submitted before contract award. Program shall contain following i) The structure of the organization ii) The duties and responsibilities assigned to staff ensuring quality of work. iii) The bidder should have qualified technical & dedicated QA

		personnel at various stages of manufacture & testing. iv) Factory inspection of bidder may be carried out to ascertain the quality system and process in place at manufacturing facility. The same is applicable to bidders not approved with BSES. v) The system for purchasing, taking delivery and verification of materials vi) The system for ensuring quality of workmanship vii) The system for control of documentation viii) The system for the retention of records ix) The arrangements for the Supplier's internal auditing x) A list of the administration and work procedures required to achieve and verify Contract's quality requirements. These procedures shall be made readily available to the Purchaser for inspection on request
7.2	Quality Plan	To be submitted by the successful bidder for approval. Plan shall contain following as a minimum i) An outline of the proposed work and programm sequence ii) The structure of the Supplier's organisation for the contract iii) The duties and responsibilities assigned to staff ensuring quality of work for the contract iv) Inspection Hold and notification points mutually agreed. v) Submission of engineering documents required by the specification vi) The inspection of materials and components on receipt vii) Reference to the Supplier's work

		procedures appropriate to each activity viii) Inspection during fabrication/ construction ix) Final inspection and test x) Successful bidder shall include submittal of Mills invoice, Bill of lading, Mill's test certificate for grade, physical tests, dimension, specific watt loss per kG for the core material to the purchaser for verification in the quality plan suitably
7.3	Manufacturing Quality Assurance Plan	Refer Annexure D

8.0 Progress Reporting

8.1	Outline Document	To be submitted for purchaser approval for outline of production, inspection, testing, packing, dispatch, documentation programme
8.2	Detailed Progress report	To be submitted to Purchaser once a month containing i) Progress on material procurement ii) Progress on fabrication iii) Progress on assembly iv) Progress on internal stage inspection v) Reason for any delay in total programme vi) Details of test failures if any in manufacturing stages vii) Progress on final box up viii) Constraints ix) Forward path

9.0 Inspection & testing

9.1	Inspection and Testing during manufacture	Only type tested equipment shall be acceptable
9.1.1	Tank and Conservator	i) Check correct dimensions between wheels demonstrate turning of wheels through 90 deg and further dimensional check.

		ii) Check for physical properties of materials for lifting lugs, jacking pads etc. All load bearing welds, including lifting lug welds shall be subjected to iii) required load tests. iv) Leakage test of the conservator. v) Certification of all test results. vi) Oil leakage test . vii) Vacuum and Pressure test on tank as type test as per IS
9.1.2	Core	i)
9.1.2.1	Mother Core coil	Verification & inspection of the mother coil at port & putting stamp & seal may be inspected by BSES.
9.1.2.2	Core sample type testing	Reconciliation of mother coil by checking stamp & seal at factory before slitting. One sample of CRGO to be sealed for testing at ERDA/CPRI. Following Tests shall be conducted on the sample per P.O. i) Specific core loss measurement ii) Magnetic polarization iii) Magnetic permeability iv) Specific core loss measurement after accelerated ageing test v) Surface insulation resistivity vi) Electrical resistivity measurement vii) Stacking factor viii) Ductility(Bend test) ix) Lamination thickness x) Magnetization characteristics (B-H curve)
9.1.2.3	Core cutting	Bidder should have in house core cutting facility for proper monitoring & control on quality. In case it is done outside cutting shall be done in presence of BSES.
9.1.2.4	Core physical verification	i) Check on the quality of varnish if used on the stampings. a) Measurement of thickness and hardness of varnish on stampings. b) Solvent resistance test to check that varnish does not react in hot oil. c) Check over all quality of varnish by sampling to ensure uniform hipping colour, no bare spots. No ever burnt

		varnish layer and no bubbles on varnished surface. ii) Check on the amount of burns. iii) Bow check on stampings. iv) Check for the overlapping of stampings. Corners of the sheet are to be apart. v) Visual and dimensional check during assembly stage. vi) Check on complete core for measurements of iron-loss and check for any hot spot by exciting the core so as to induce the designed value of flux density in the core. vii) Check for inter laminar insulation between core sectors before and after pressing. viii) Visual and dimensional checks for straightness and roundness of core, thickness of limbs and suitability of clamps. ix) High voltage test (2 KV for one minute) between core and clamps. Certification of all test results.
9.1.2.5	Documents verification	Following documents to be submitted during the stage inspection i) Invoice of supplier ii) Mills test certificates iii) Packing list iv) Bill of lading v) Bill of entry certificates by customs
9.1.3	Insulating Materials	i) Sample check for physical properties of materials. ii) Check for dielectric strength. iii) Visual and dimensional checks. iv) Check for the reaction of hot oil on insulating materials. v) Certification of all test results.
9.1.4	Windings	i) Sample check on winding conductor for mechanical properties and electrical conductivity. ii) Visual and dimensional check on conductor for scratches, dept. mark etc. iii) Sample check on insulating paper for

		PE value, Bursting strength, Electric strength. iv) Check for the reaction of hot oil on insulating paper. v) Check for the bending of the insulating paper on conductor. vi) Check and ensure that physical condition of all materials taken for winding is satisfactory and free of dust. vii) Check for absence of short circuit between parallel strands. viii) Check for Brazed joints wherever applicable. ix) Measurement of voltage ratio to be carried out when core/ yoke is x) completely restocked and all connections are ready. xi) Certification of all test results.
9.1.4.1	Checks before drying process	i) Check conditions of insulation on the conductor and between the windings. ii) Check insulation distance between high voltage connection distance between high voltage connection cables and earthed and other live parts. iii) Check insulation distance between low voltage connection and earthed and other parts. iv) Insulation test of core earthing. v) Check for proper cleanliness vi) Check tightness of coils i.e. no free movement. vii) Certification of all test results.
9.1.4.2	Checks during drying process	i) Measurement and recording of temperature and drying time during vacuum treatment. ii) Check for completeness of drying. iii) Certification of all test results.
9.1.5	Oil sample testing	One sample of oil drawn from every lot of transformer offered for inspection should be tested at CPRI/ERDA lab for tests as listed under Table-1 of IS:1866 (2000). The cost of this testing should be included within the

		cost of transformer.
9.1.6	Test on fittings and accessories	As per manufacturer's standard
9.2	Routine tests	The sequence of routine testing shall be as follows i) Visual and dimension check for completely assembled transformer ii) Measurements of voltage ratio iii) Measurements of winding resistance at principal tap and two extreme taps. iv) Vector Group and polarity test v) Measurements of insulation resistance* vi) Separate sources voltage withstand test. vii) Measurement of iron losses and exciting current at rated frequency and 90%, 100% and 110% rated voltage. viii) Induced voltage withstand test. ix) Load losses measurement at 50 % & 100 % of load. x) Impedance measurement of principal tap (HV and LV) of the transformer. xi) Routine test of tanks xii) Induced voltage withstand test (to be repeated if type tests are conducted). xiii) Measurement of Iron loss (to be repeated if type test are conducted). xiv) Measurement of capacitance and Tan Delta for transformer winding and Tan Delta for transformer oil (for all transformers). xv) Ratio of CT xvi) Oil leakage test on completely assembled transformer xvii) Magnetic balance test xviii) Power frequency voltage withstand test on all auxiliary circuits xix) Certification of all test results. xx) Temperature Rise Test # Note: a) *Insulation resistance measurement

		shall be carried out at 5kV for HV and 1kV for LV. Value of IR should not be less than 1000 Mohms. Polarization Index (PI = IR_{10min}/IR_{1min}) should not be less than 1.5 (If one minute IR value is above 5000 Mohms and it is not be possible to obtain an accurate 10 minutes reading, in such cases polarization index can be disregarded as a measure of winding condition.) b) #Temperature rise test may be necessary to be carried one unit/lot. Purchaser's engineer, will at its discretion, select transformer for temp. rise test from any lot offered for inspection at manufacturer's works and witness the same for comparison with ERDA/CPRI type test results c) BSES may appoint recognized testing authority like CPRI /ERDA lab with their instruments & engineer's team and measure no load loss, load loss and percentage impedance of the transformer at supplier's works at our own cost. Bidder shall agree and give them full co-operation during their stay & testing at shop floor. The losses & impedance values so obtained will be considered as final.
9.3	Acceptance test at NABL lab	Bidder should have in-house NABL accredited testing facility. In case of unavailability of same, one Transformer of each rating shall be randomly selected and sealed by BSES Representative for complete acceptance test as per IS 1180 (including temperature test) at third party NABL Lab. Tests shall be conducted once per Rate contract.
9.4	Type Tests	On one transformer of each rating and type at CPRI/ERDA. i) Impulse withstand test on all three HV limbs of the transformers for chopped wave as per standard ii) Temperature rise test as per IS iii) Dissolved gas analysis before and after Temperature Rise Test

		iv) Pressure and Vacuum test on tank v) Note – Purchaser may choose to carry out short circuit, impulse & temperature rise test on one unit from a lot offered from inspection at CPRI/ERDA
9.5	Special Tests	On one transformer of each rating and type i) Dynamic & Thermal (3 sec) Short Circuit Test as per IS 2026 ii) Measure of zero seq. impedance (Cl. 16.10 IS 2026 Part I). iii) Measurement of acoustic noise level (Cl. 16.12 of IS 2026 Part I). iv) Measurement of harmonic level on no load current. v) Paint adhesion test. vi) High voltage withstand test shall be performed on the auxiliary equipment and wiring after complete assembly. Cost of such tests, if extra, shall be quoted separately by the Bidder.
9.6	Notification to bidders	In case bidder had conducted type & special tests from CPRI/ERDA on BSES design and there is no design change in the transformer less than 10 years from the date of the bid opening, then bidder need not to conduct the type test from CPRI/ERDA lab. The bidder shall submit the under taking that there is no change in design with respect to type tested design.
		The product offered must be of type tested quality. In case the product offered is never type & special tested the same (as per above clause 9.4.& 9.5), is to be conducted by bidder at his own cost at CPRI/ERDA
9.7	Customer Hold Point	i) GTP & Drawings approval ii) Core Inspection(See Cl No 9.1.2) Sample to be tested at CPRI/ERDA for each lot. iii) Tank Pressure & vacuum Test

		iv) Core & Coil Stage inspection of each lot to be offered for final testing.

10.0 Packing , Shipping, Handling and Storage

10.1	Packing	
10.1.1	Packing protection	Against corrosion, dampness, heavy rains, breakage and vibration
10.1.2	Packing for accessories and spares	Robust wooden non returnable packing case with all the above protection
10.1.3	Packing details	On each packing case details required as follows i) Individual serial number; ii) Purchaser's name; iii) PO number; iv) Destination; v) Supplier's name; vi) Name and address of supplier's agent vii) Description and quantity viii) Manufacturer's name ix) Country of origin x) Case measurements xi) Gross and net weights in kilograms xii) All necessary slinging and stacking instructions.
10.2	Shipping	i) The bidder shall ascertain at an early date and definitely before the commencementof manufacture, any transport limitations such as weights, dimensions, road culverts, overhead lines, free access etc. from the manufacturing plant to the project site; and furnish to the Purchaser confirmation that the proposed packages can be safely transported, as normal or oversize packages, upto the plant site. ii) Any modifications required in the infrastructure and cost thereof in this connection shall be brought to the notice of the Purchaser

10.3	Handling and Storage	As per manufacturer's instruction

11.0 Deviations

Deviations from this Specification shall be stated in writing with the tender by reference to the Specification clause/GTP/Drawing and a description of the alternative offer. In absence of such a statement, requirements of the Specification shall be met without exception.

12.0 Drawings& Data Submission Matrix

Drawing submission shall be as per the matrix given below. All documents/ drawing shall be provided on A3/A4 sheet in box file with separators for each section. PDF shall also be provided of all documents via USB. Deviation sheet and GTP shall be provided in excel sheet.Language of the documents shall be English only. Deficient/ improper document/ drawing submission may liable for rejection.

S.no	Documents to be submitted	With the bid	After Award	
			For Approval	Prior to dispatch
1	Copy of specification along with company seal & signature on each page.	✓	✓	
2	Guaranteed technical particulars	✓	✓	
3	Outline dimension drawing for each major component, general arrangement drawing showing component layout an general schematic diagrams.	✓	✓	
4	Type test certificates, where available, and sample routine test reports	✓	✓	
5	Detailed reference list of customers already using equipment offered during the last 5 years with particular emphasis on units of similar design and rating	✓		
6	Details of manufacturers quality assurance standard and programme and ISO 9000 series or equivalent national certification.	✓		
7	Deviations from this specification. Only deviations approved in writing before award of contract shall be accepted.	✓		
8	Recommended spare parts and consumable items for the five years of operation with prices and spare	✓		

S.no	Documents to be submitted	With the bid	After Award	
			For Approval	Prior to dispatch
	parts catalogue with price list for future requirements.			
9	Transport / shipping dimension and weights, space required for handling parts for maintenance	✓		
10	Write up on oil preservation system.		✓	✓
11	Quality assurance program.	✓	✓	
12	Programme for production and testing		✓	
13	General description of the equipment and all components, including brochures		✓	
14	Detailed dimension drawing for all components ,general arrangement drawing showing detailed component layout and detailed schematic and wiring drawings for all components like marshalling box and OTI/WTI scanner, PRV, Buchhloz relay. Auxiliary relays		✓	
15	Calculations to substantiate choice of electrical, structural, mechanical component size, ratings		✓	
16	Detailed loading drawing to enable the purchaser to design and construct foundations for the transformer.		✓	
17	Transport /shipping dimension with weights ,wheel base details, untanking height etc.		✓	
18	Terminal arrangements and cable box details		✓	
19	Flow diagram of cooling system showing no. of cooling banks		✓	
20	Drawings of major components like bushing,CT, OTI/WTI Scanner, PRV, Buchholz relay, Auxiliary relays, Valves, radiators etc		✓	
21	Lists of makes of all fittings and accessories		✓	
22	Statement drawing attention to all exposed points in the equipment at which contact with or in close proximity to other metals and stating clearly what protection is employed to prevent corrosion at each point		✓	

S.no	Documents to be submitted	With the bid	After Award	
			For Approval	Prior to dispatch
23	Detailed installation and commissioning instructions			✓
24	Inspection and test reports carried out in manufacturers works			✓
25	Test certificates of all bought out items. and catalogues			✓
26	Operation and maintenance instructions as well as trouble shooting charts.			✓

Annexure A Scope of supply

1.0 The scope of supply shall include following

1.1 Design, manufacture, assembly, testing at stages of manufacture as per Cl. 9 of this specification, final testing at manufacturer works on completely assembled transformer before dispatch, packing, transportation, delivery and submission of all documentation for the Power transformer with all accessories as below

Sr. No	Description	Scope of Supply
1.1.1	Fully assembled transformer with all major parts like conservator, Radiators, CT box, Fittings and accessories as per Clause 5.0 of this specification	YES
1.1.2	Off circuit tap changer as per this specification	YES
1.1.3	HV, LV, cable boxes	YES
1.1.4	Support steel material for support of cable boxes from ground	YES

1.1.5	Foundation Bolts for complete transformer	YES
1.1.6	Support structure to support of cable from the transformer tank	YES
1.1.7	Nickel Plated brass double compression glands for HV and LV, LVN cables (in case of termination by cable)	YES
1.1.8	Long barrel medium duty Aluminium lugs for power cables (in case of termination by cable)	YES
1.1.9	Nickel Plated brass double compression glands and tinned copper lugs for control cable termination in CT box for vendor's cables	YES
1.1.10	Cables and wires for transformer accessories and internal wiring of CT box	YES
1.1.11	Touch up paint, minimum 2 litres	YES
1.1.12	Extra Transformer oil 10 % in non returnable drums	YES
1.1.13	One spare complete set of gaskets	YES
1.1.14	Routine testing as per Cl. 9.2 & 9.3 of this specification	YES
1.1.15	Type testing as per Cl. 9.4 of this specification	YES
1.1.16	Special testing as per Cl. 9.5 of this specification	YES
1.1.17	Submission of Documentation as detailed below	YES

Annexure B Service Conditions

1.0.0	Delhi Atmospheric conditions	
a)	Average grade atmosphere :	Heavily polluted, dry
	Maximum altitude above sea level	1000 M
b)	Ambient Air temperature	Highest 50 deg C, Average 40 deg C
	Design ambient temperature	50 deg C
c)	Relative Humidity	90 % Max
d)	Seismic Zone	4
e)	Rainfall	750 mm concentrated in four months

Annexure C Technical Particulars of transformer oil

Transformer oil shall be new and conform to the following requirements:

1.0 Codes & standards

Latest revision of following codes & standards with all amendments –

	Standard no	Title
1.1	IS 335	New insulating oils
1.2	IS 1783	Drums for oils

2.0 Properties

The insulating material shall have following features

Sr No	Item description	Specification requirement
2.1	**Function**	
2.1.1	Viscosity	
2.1.1.1	Viscosity at 40^0C	15 mm^2/s, Max
2.1.1.2	Viscosity at 0^0C	1800 mm^2/s, Max
2.1.2	Pour Point	- 10^0C, Max
2.1.3	Water content	30 mg/Kg, Max
2.1.4	Breakdown voltage	
2.1.4.1	New unfiltered oil	30 kV, Min
2.1.4.2	After filtration	70 kV, Min
2.1.5	Density at 20^0C	0.895 g/ml, Max
2.1.6	Dielectric dissipation factor at 90^0C	0.005, Max
2.1.7	Particle Content	Manufacturer to specify the data
2.2	**Refining/Stability**	
2.2.1	Appearance of oil	Clear, free from sediment and suspended matter
2.2.2	Acidity	0.01 mg KOH/g, Max
2.2.3	Interfacial tension at 27^0C	0.04 N/m, Min
2.2.4	Total sulphur content	Manufacturer to specify the data
2.2.5	Corrosive sulfur	Not-corrosive
2.2.6	Potentially Corrosive sulfur	Not-corrosive
2.2.7	DBDS	Not detectable (<5 mg/kg)
2.2.8	Inhibitor	Not detectable (<0.01%)
2.2.9	Metal Passivator	Not detectable (<5 mg/kg)
2.2.10	Other additives	Manufacturer to specify the data
2.2.11	2-furfural and related Compounds content	Not detectable (<0.05 mg/kg) for each individual compound
2.3	**Performance**	
2.3.1	Oxidation stability, test duration 164 h	
2.3.1.1	Total acidity	1.2 mg KOH/g, Max
2.3.1.2	Sludge	0.8%, Max
2.3.1.3	DDF at 90^0C	0.5, Max

Sr No	Item description	Specification requirement
2.3.2	Gassing Tendency	Manufacturer to specify the data
2.3.3	ECT	Manufacturer to specify the data
2.4	**Health,safety and Environment**	
2.4.1	Flash point	135^0C, Min
2.4.2	PCA content Max	3%, Max
2.4.3	PCB content	Not detectable (<2 mg/Kg)

Annexure D Manufacturing Quality Assurance Plan

SL NO	CHARACTRISTICS	CLASS	TYPE OF CHECK	QUANTUM OF CHECK	REFERENCE DOCUMENT	ACCEPTANCE NORMS	FORMAT OF RECORD	AGENCY			REMARKS
								S	M	O	
1	2	3	4	5	6	7	8	9			10
A	**RAW Material**										
1	**Winding Conductor (PICC)**										
1.1	Bare Dimensions & Finish of Conductor	Major	Measurement	1 sample per size per lot	IEC 13730 Part 27,IEC 60317,IS 7404,IS 6160,IS 613	IEC 13730 Part 27,IEC 60317,IS 7404,IS 6160,IS 613	Supplier's TC	P	V	R	
1.2	Increase in dimensions due to Paper covering	Major	Measurement	-DO-	-DO-	-DO-	-DO-	P	V	R	
1.3	Resistivity @ 20°C	Major	Electrical	-DO-	-DO-	-DO-	-DO-	P	V	R	
1.4	No of Layers	Critical	Measurement	-DO-	-DO-	-DO-	-DO-	P	V	R	
1.5	Conductor Tensile strength	Critical	Mechanical	-DO-	-DO-	-DO-	-DO-	P	V	R	
1.6	Conductor Elongation	Critical	Mechanical	-DO-	-DO-	-DO-	-DO-	P	V	R	
1.7	% Overlap of Paper	Critical	Mechanical	-DO-	-DO-	-DO-	-DO-	P	V	R	

SL NO	CHARACTRISTICS	CLASS	TYPE OF CHECK	QUANTUM OF CHECK	REFERENCE DOCUMENT	ACCEPTANCE NORMS	FORMAT OF RECORD	AGENCY			REMARKS
								S	M	O	
1	2	3	4	5	6	7	8	9			10
1.8	Corner Radius	Critical	Mechanical	-DO-	-DO-	-DO-	-DO-	P	V	R	
1.9	**Kraft Paper Insulation**										
1.9.1	Thickness	Major	Measurement	1 sample per size per lot	IEC:60554, IS:9335	IEC:60554, IS:9335	Supplier's TC	P	V	R	
1.9.2	Apparent Density	Major	Chemical	-DO-	-DO-	-DO-	-DO-	P	V	R	
1.9.3	Air Permeability	Major	Chemical	-DO-	-DO-	-DO-	-DO-	P	V	R	
1.9.4	Tensile Index (Longitudinal and Transverse)	Major	Mechanical	-DO-	-DO-	-DO-	-DO-	P	V	R	
1.9.5	Electrical Strength in Air	Major	Electrical	-DO-	-DO-	-DO-	-DO-	P	V	R	
1.9.6	Ash Content	Major	Chemical	-DO-	-DO-	-DO-	-DO-	P	V	R	
1.9.7	pH of 5% Aqueous Extract	Major	Chemical	-DO-	-DO-	-DO-	-DO-	P	V	R	
1.9.8	Conductivity of 5% Aqueous Extract	Critical	Chemical	-DO-	-DO-	-DO-	-DO-	P	V	R	
1.9.9	Moisture Content	Major	Chemical	-DO-	-DO-	-DO-	-DO-	P	V	R	
1.9.10	Heat Stability	Major	Chemical	-DO-	-DO-	-DO-	-DO-	P	V	R	
1.9.11	Degree of Polymerization	Major	Chemical	-DO-	-DO-	-DO-	-DO-	P	V	R	

SL NO	CHARACTRISTICS	CLASS	TYPE OF CHECK	QUANTUM OF CHECK	REFERENCE DOCUMENT	ACCEPTANCE NORMS	FORMAT OF RECORD	AGENCY			REMARKS
								S	M	O	
1	2	3	4	5	6	7	8	9			10
1.9.12	Elongation (MD & CMD)	Major	Mechanical	-DO-	-DO-	-DO-	-DO-	P	V	R	
1.9.13	Tear index	Major	Mechanical	-DO-	-DO-	-DO-	-DO-	P	V	R	
2.0	**CRGO Laminations (Watt absorption)**										
2.1	Specific Core Loss	Major	Electrical	Random	IEC 60404, IS 3024, IS 649	IEC 60404, IS 3024, IS 649	Supplier's TC	P	V	R	
2.2	Surface Insulation resistance	Major	Electrical	-DO-	-DO-	-DO-	-DO-	P	V	R	
2.3	Ageing Test	Major	Measurement	-DO-	-DO-	-DO-	-DO-	P	V	R	
2.4	Stacking Factor	Major	Measurement	-DO-	-DO-	-DO-	-DO-	P	V	R	
2.5	Waviness	Major	Measurement	-DO-	-DO-	-DO-	-DO-	P	V	R	
2.6	Edge Burr	Major	Visual	-DO-	-DO-	-DO-	-DO-	P	V	R	
2.7	Sample testing for Checking Specific Core loss, accelerated ageing test, Surface insulation resistivity, AC permeability and magnetization, stacking	Major	Electrical	100%	-DO-	-DO-	--	--	P	W	Sample will be randomly selected by BSES & will be send for testing at CPRI/ERDA

SL NO	CHARACTRISTICS	CLASS	TYPE OF CHECK	QUANTUM OF CHECK	REFERENCE DOCUMENT	ACCEPTANCE NORMS	FORMAT OF RECORD	AGENCY			REMARKS
								S	M	O	
1	2	3	4	5	6	7	8	9			10
	factor, Ductility										lab.
3.12	Core Cutting	Major	Visual	Random	-DO-	-DO-	-DO-	P	W	W	
3.0	**Un-impregnated Laminated Wood**										
3.1	Thickness	Major	Visual	1 sample size / LOT	IS 3513/IEC 61061	IS 3513/IEC 61061	Supplier's TC	P	V	R	
3.2	Density	Major	Chemical	-DO-	-DO-	-DO-	-DO-	P	V	R	
3.3	Moisture Content	Major	Chemical	-DO-	-DO-	-DO-	-DO-	P	V	R	
3.4	Oil Absorption	Major	Chemical	-DO-	-DO-	-DO-	-DO-	P	V	R	
3.5	Cross breaking strength	Major	Mechanical	-DO-	-DO-	-DO-	-DO-	P	V	R	
3.6	Compressive Strength	Major	Mechanical	-DO-	-DO-	-DO-	-DO-	P	V	R	
3.7	Electric Strength in Oil	Major	Electrical	-DO-	-DO-	-DO-	-DO-	P	V	R	
3.8	Shrinkage in oil	Major	Mechanical	-DO-	-DO-	-DO-	-DO-	P	V	R	
3.9	Tensile Strength,compressive strength	Major	Mechanical	-DO-	-DO-	-DO-	-DO-	P	V	R	
4.0	**Press Boards (Pre-compressed)**										

SL NO	CHARACTRISTICS	CLASS	TYPE OF CHECK	QUANTUM OF CHECK	REFERENCE DOCUMENT	ACCEPTANCE NORMS	FORMAT OF RECORD	AGENCY			REMARKS
								S	M	O	
1	2	3	4	5	6	7	8	9			10
4.1	Thickness	Major	Measurement	1 sample/Size/LOT	IEC:60641, IS:1576	IEC:60641, IS:1576	Supplier's TC	P	V	R	
4.2	Tensile Strength (MD & CMD)	Major	Mechanical	-DO-	-DO-	-DO-	-DO-	P	V	R	
4.3	Shrinkage in Air (MD & CMD)	Major	Mechanical	-DO-	-DO-	-DO-	-DO-	P	V	R	
4.4	Moisture Content	Major	Chemical	-DO-	-DO-	-DO-	-DO-	P	V	R	
4.5	Oil Absorption	Major	Chemical	-DO-	-DO-	-DO-	-DO-	P	V	R	
4.6	Electrical Strength in Oil and air	Major	Electrical	-DO-	-DO-	-DO-	-DO-	P	V	R	
4.7	pH of 5% aqueous extract	Major	Chemical	-DO-	-DO-	-DO-	-DO-	P	V	R	
4.8	Conductivity of 5% aqueous extract	Major	Chemical	-DO-	-DO-	-DO-	-DO-	P	V	R	
4.9	Compressibility	Major	Mechanical	-DO-	-DO-	-DO-	-DO-	P	V	R	
4.10	Ash Content	Major	Chemical	-DO-	-DO-	-DO-	-DO-	P	V	R	
4.11	Apparent density	Major	Chemical	-DO-	-DO-	-DO-	-DO-	P	V	R	
4.12	Elongation (MD & CMD)	Major	Mechanical	-DO-	-DO-	-DO-	-DO-	P	V	R	
5.0	**Tank and its**										

SL NO	CHARACTRISTICS	CLASS	TYPE OF CHECK	QUANTUM OF CHECK	REFERENCE DOCUMENT	ACCEPTANCE NORMS	FORMAT OF RECORD	AGENCY			REMARKS
								S	M	O	
1	2	3	4	5	6	7	8	9			10
	accessories										
5.1	Structural steel										
5.1.1	Thickness	Major	Measurement	Random	IS 2062/ IS:1576	IS 2062/ IS:1576	Suppliers TC	P	V	R	
5.1.2	Yield Strength	Major	Mechanical	-DO-	-DO-	-DO-	-DO-	P	V	R	
5.1.3	Tensile Strength	Major	Mechanical	-DO-	-DO-	-DO-	-DO-	P	V	R	
5.1.4	Elongation	Major	Mechanical	-DO-	-DO-	-DO-	-DO-	P	V	R	
5.1.5	Bend test	Major	Mechanical	-DO-	-DO-	-DO-	-DO-	P	V	R	
5.1.6	Chemical composition	Major	Chemical	-DO-	-DO-	-DO-	-DO-	P	V	R	
5.2	**Manufacturing of Tank and accessories**										
5.2.1	Dimension check	Major	Measurement	100%	MFR. Spec/ DRG/BSES approved document	MFR. Spec/ DRG/ BSES approved document	MFR. Fabrication report	P	W	R	
5.2.2	Joint preparation	Major	Measurement	100%	-DO-	-DO-	-DO-	P	V	R	
5.2.3	Assembly and alignment	Major	Visual and measurement	100%	MFR. Spec/ DRG	MFR. Spec/ DRG	MFR. Fabrication report	P	V	R	

SL NO	CHARACTRISTICS	CLASS	TYPE OF CHECK	QUANTUM OF CHECK	REFERENCE DOCUMENT	ACCEPTANCE NORMS	FORMAT OF RECORD	AGENCY			REMARKS
								S	M	O	
1	2	3	4	5	6	7	8	9			10
5.2.4	DP Test on Welds on Load bearing members eg. Jack Pads	Major	DP Test	100%	-DO-	-DO-	-DO-	P	W	R	
5.2.5	Pressure test	Major	Mechanical	On One unit	CBIP	CBIP	Test Report	--	P	W	**STAGE INSPECTION**
5.2.6	Vacuum test	Major	Mechanical	On One unit	CBIP	CBIP	Test Report	--	P	W	**STAGE INSPECTION**
5.2.7	**Leakage test**										
5.2.7.1	Main Unit	Major	Mechanical	100%	MFR. STD	MFR. STD	Test report	P	W	R	
5.2.7.2	Conservator	Major	Mechanical	100%	MFR. STD	MFR. STD	Test report	P	W	R	
5.2.7.3	Pipes	Major	Mechanical	100%	MFR. STD	MFR. STD	Test report	P	W	R	
5.2.8	Surface preparation	Major	Visual	100%	MFR. STD	MFR. STD	MFR. Fabrication report	P	V	R	
5.2.9	Final Paint Coat (including Primer), Thickness & Shade	Major	Measurement	100%	MFR. STD	MFR. STD	Test report	P	V	R	
5.2.10	Paint Peel off test	Major	Visual	100%	MFR. STD	MFR. STD	Test report	--	P	R	

SL NO	CHARACTRISTICS	CLASS	TYPE OF CHECK	QUANTUM OF CHECK	REFERENCE DOCUMENT	ACCEPTANCE NORMS	FORMAT OF RECORD	AGENCY			REMARKS
								S	M	O	
1	2	3	4	5	6	7	8	9			10
6.0	**Bushing/Insulators**										
6.1	Make and rating	Critical	Visual	100%	IS 8603/IS 2099/App.Drg.	IS 8603/IS 2099/App.Drg.	Supplier's TC	P	V	R	
6.2	Visual inspection for surface smoothness, any damage, etc.	Critical	Visual	100%	-DO-	-DO-	-DO-	P	V	R	
6.3	Important dimension including Creepage distance	Major	Measurement	One sample /size / lot	-DO-	-DO-	-DO-	P	V	R/W	
6.4	Dry Power Frequency voltage withstabd test	Major	Electrical	100%	-DO-	-DO-	-DO-	P	V	R	
6.5	Air pressure test in water	Major	Electrical	100%	-DO-	-DO-	-DO-	P	V	R	
6.6	Electro -Tinning	Major	Electrical	100%	-DO-	-DO-	-DO-	P	V	R	
6.7	All routine electrical tests	Major	Electrical	-do-	-do-	-do-	-do-	P	V	R	
7.0	**Magnetic Oil Gauge**										
7.1	Make and dimensions	Major	Physical	100%	App.Drg./ Supplier Catalogue	App.Drg./ Supplier Catalogue	Supplier's TC	P	V	R	
7.2	Test for level (eg at 30°	Major	Mechanical	100%	-DO-	-DO-	-DO-	P	V	R	

SL NO	CHARACTRISTICS	CLASS	TYPE OF CHECK	QUANTUM OF CHECK	REFERENCE DOCUMENT	ACCEPTANCE NORMS	FORMAT OF RECORD	AGENCY			REMARKS
								S	M	O	
1	2	3	4	5	6	7	8	9			10
	Max)										
7.3	Switch contact test	Major	Electrical	100%	-DO-	-DO-	-DO-	P	V	R	
7.4	Leakage test	Major	Mechanical	100%	-DO-	-DO-	-DO-	P	V	R	
7.5	Switch operating and setting	Major	Electrical	100%	-DO-	-DO-	-DO-	P	V	R	
7.6	Di-electric test at 2 KV AC between live terminal and body	Major	Electrical	100%	-DO-	-DO-	-DO-	P	V	R	
8.	**Buchholz relay**										
8.1	Make and type	Critical	Visual	100%	App.Drg./ Supplier Catalogue /IS 3637	App.Drg./ Supplier Catalogue /IS 3637	Supplier's TC	P	V	R	
8.2	Bore size	Major	Measurement	One/size	-DO-	-DO-	-DO-	P	V	R	
8.3	Porosity and element test	Major	Critical	100%	-DO-	-DO-	-DO-	P	V	R	
8.4	Gas volume and surge test	Major	Mechanical	One/Size	-DO-	-DO-	-DO-	P	V	R	
8.5	HV test at 2 KV AC & IR test	Major	Electrical	100%	-DO-	-DO-	-DO-	P	V	R	

SL NO	CHARACTRISTICS	CLASS	TYPE OF CHECK	QUANTUM OF CHECK	REFERENCE DOCUMENT	ACCEPTANCE NORMS	FORMAT OF RECORD	AGENCY			REMARKS
								S	M	O	
1	2	3	4	5	6	7	8	9			10
8.6	Continuity for alarm/Trip	Major	Electrical	100%	-DO-	-DO-	-DO-	P	V	R	
9.0	**Radiator**										
9.1	Dimension, number of sections	Major	Measurement	100%	MFR. DRG	VTD DRG	Supplier's TC	P	V	R	
9.2	Leakage Test with Air	Major	Visual	100%	As per CBIP	As per CBIP	Supplier's TC	P	V	R	
9.3	Paint shade	Major	Visual & Measurement	Random	MFR. Specs /Drg	MFR. Specs /Drg	Supplier's TC	P	V	R	
9.4	Surface Preparation	Major	Measurement	100%	SA 2.5 of ISO 8503/2	SA 2.5 of ISO 8503/2	Supplier's TC	P	V	R	
10	**Off Circuit Tap Changer**										
10.1	Make, Rating and model	Major	Visual	100%	MFR. Spec/ IS 8468 /IEC 214-1989	MFR. Spec/ IS 8468 /IEC 214-1989	Supplier's TC	P	V	R	
10.2	Contact Resistance test	Major	Visual	100%	Supplier's STD	Supplier's STD	Supplier's TC	P	V	R	
10.3	Electrical Routine test	Major	Electrical	100%	IS 8468/ IEC 214	IS 8468/ IEC 214	Supplier's TC	P	V	R	
10.4	Mechanical test on diverter switch including	Major	Mechanical	100%	-DO-	-DO-	-DO-	P	V	R	

SL NO	CHARACTRISTICS	CLASS	TYPE OF CHECK	QUANTUM OF CHECK	REFERENCE DOCUMENT	ACCEPTANCE NORMS	FORMAT OF RECORD	AGENCY			REMARKS
								S	M	O	
1	2	3	4	5	6	7	8	9			10
	pressure test										
10.5	HV test for Auxiliary circuit	Major	Electrical	100%	-DO-	-DO-	-DO-	P	V	R	
10.6	Mechanical test on Tap selector switch with motor drive	Major	Mechanical	100%	-DO-	-DO-	-DO-	P	V	R	
10.7	Pressure test for Oil Compartment	Major	Mechanical test	100%	-DO-	-DO-	-DO-	P	V	R	
11.0	**Transformer Oil**	Major	Testing	One Sample from each lot	Annexure D of BSES spec.	Annexure D of BSES spec.	STC	P	V	R	One sample of oil shall be drawn from **each lot of Transformer** offered for final inspection by BSES representative and same shall be tested at CPRI/ERDA

SL NO	CHARACTRISTICS	CLASS	TYPE OF CHECK	QUANTUM OF CHECK	REFERENCE DOCUMENT	ACCEPTANCE NORMS	FORMAT OF RECORD	AGENCY			REMARKS
								S	M	O	
1	2	3	4	5	6	7	8	9			10
											lab as per relevant std.
12.0	**OTI / WTI Scanner**										
12.1	Make and Model	Critical	Visual	100%	MFR. STD/App. Drg.	MFR. STD/App. Drg.	Suppliers TC	P	P	R	
12.2	Calibration	Major	Electrical	100%	-DO-	-DO-	-DO-	P	P	R	
12.3	Check for alarm & trip signal operation against set value	Major	Electrical	100%	-DO-	-DO-	-DO-	P	P	R	
12.4	HV test	Major	Electrical	100%	-DO-	-DO-	-DO-	P	V	R	
12.5	Switch Setting	Major	Mechanical	100%	-DO-	-DO-	-DO-	P	P	R	
13.0	**Bushing Metal parts**										
13.1	Dimension Checks	Major	Mechanical	100%	MFR. STD /IS 3347	MFR. STD /IS 3347	Supplier's TC	P	V	R	
13.2	Surface Finish	Major	Visual	100%	-DO-	-DO-	-DO-	P	V	R	
14.0	**Current Transformers**										
14.1	Dimensions, make	Major	Measurement	100%	MFR. STD /App. DRG. / IS 2705	MFR. STD /App. DRG. / IS 2705	Supplier's TC	P	P	R	

SL NO	CHARACTRISTICS	CLASS	TYPE OF CHECK	QUANTUM OF CHECK	REFERENCE DOCUMENT	ACCEPTANCE NORMS	FORMAT OF RECORD	AGENCY			REMARKS
								S	M	O	
1	2	3	4	5	6	7	8	9			10
14.2	Rating and terminal marking	Major	Physical	100%	MFR. APPD. DRG	MFR. APPD. DRG	Supplier's TC	P	P	R	
14.3	Measurement of ratio and phase angle error	Major	Electrical	100%	IS 2705	IS 2705	Supplier's TC	P	V	R	
14.4	High Voltage test	Major	Electrical	100%	-DO-	-DO-	-DO-	P	V	R	
14.5	Inter-Turn insulation test	Major	Electrical	100%	-DO-	-DO-	-DO-	P	V	R	
14.6	Polarity	Major	Electrical	100%	-DO-	-DO-	-DO-	P	V	R	
14.7	Knee point voltage	Major	Electrical	-do-	-do-	-do-	-do-	P	V	R	Only for Class-PS NCT
14.8	Excitation current	Major	Electrical	-do-	-do-	-do-	-do-	P	V	R	Only for Class-PS NCT
14.9	Secondary winding resistance	Major	Electrical	-do-	-do-	-do-	-do-	P	V	R	Only for Class-PS NCT
15.0	**Valves/ Butterfly valves**										
15.1	Make & operation	Critical	Visual	100%	APP.drg./MFR. STD/IS 778	APP.drg./MFR. STD/IS 778	Supplier's TC	P	P	R	
15.2	Leakage test for body	Major	Mechanical	100%	-DO-	-DO-	-DO-	P	P	R	

SL NO	CHARACTRISTICS	CLASS	TYPE OF CHECK	QUANTUM OF CHECK	REFERENCE DOCUMENT	ACCEPTANCE NORMS	FORMAT OF RECORD	AGENCY			REMARKS
								S	M	O	
1	2	3	4	5	6	7	8	9			10
15.3	Leakage test for top spindle	Major	Mechanical	100%	-DO-	-DO-	-DO-	P	P	R	
15.4	Mounting dimensions	Major	Measurement	100%	-DO-	-DO-	-DO-	P	P	R	
15.5	Material of Body & Seat	Major	Chemical & measurement	1 sample per lot	-DO-	-DO-	-DO-	P	V	R	
16.0	**Pressure relief Valve/Device**										
16.1	Make	Critical	Visual	100%	MFR. STD/ App. Drg.	MFR. STD/ App. Drg.	-DO-	P	P	R	
16.2	Operating pressure	Major	Mechanical	100%	-DO-	-DO-	-DO-	P	P	R	
16.3	Switch Contact test	Major	Electrical	100%	-DO-	-DO-	-DO-	P	P	R	
16.4	Mounting dimensions	Major	Measurement	100%	-DO-	-DO-	-DO-	P	V	R	
16.5	HV test between body & terminal	Major	Electrical	100%	-DO-	-DO-	-DO-	P	V	R	
17.0	**Gasket**										
17.1	Appearance & Finish	Major	Mechanical	1 sample per size per lot	IS 4253-II, 1980/IS 3400	IS 4253-II, 1980/IS 3400	Supplier's TC	P	V	R	
17.2	Hardness, IRHD	Major	Mechanical	-DO-	-DO-	-DO-	-DO-	P	V	R	
17.3	Tensile Strength	Major	Mechanical	-DO-	-DO-	-DO-	-DO-	P	V	R	

SL NO	CHARACTRISTICS	CLASS	TYPE OF CHECK	QUANTUM OF CHECK	REFERENCE DOCUMENT	ACCEPTANCE NORMS	FORMAT OF RECORD	AGENCY			REMARKS
								S	M	O	
1	2	3	4	5	6	7	8	9			10
17.4	Compressibility	Major	Mechanical	-DO-	-DO-	-DO-	-DO-	P	V	R	
17.5	Compression set	Major	Mechanical	-DO-	-DO-	-DO-	-DO-	P	V	R	
17.6	Flexibility	Major	Mechanical	-DO-	-DO-	-DO-	-DO-	P	V	R	
18.0	**Silica gel Breather with oil seal**										
18.1	Type / model/weight	Major	Visual	100%	MFR. STD /DRG	MFR. STD /DRG	Supplier's TC	P	V	R	
18.2	Color of Gel	Major	Visual	100%	-DO-	-DO-	-DO-	P	V	R	
19	**Control cubicle/CT terminal Box**										
19.1	Dimensions	Major	Measurement	100%	BSES Approved document	BSES Approved document	Supplier's TC	P	V	R	
19.2	Hi-voltage test at 2kV RMS for one minute	Major	Electrical	-DO-	-DO-	-DO-	-DO-	P	V	R	
19.3	Insulation resistance at 5000 V DC	Major	Electrical	-DO-	-DO-	-DO-	-DO-	P	V	R	
19.4	Verification of component & Fittings	Major	Visual	-DO-	-DO-	-DO-	-DO-	P	V	R	

SL NO	CHARACTRISTICS	CLASS	TYPE OF CHECK	QUANTUM OF CHECK	REFERENCE DOCUMENT	ACCEPTANCE NORMS	FORMAT OF RECORD	AGENCY			REMARKS
								S	M	O	
1	2	3	4	5	6	7	8	9			10
19.5	Wiring check	Major	Visual	-DO-	-DO-	-DO-	-DO-	P	V	R	
19.6	Welding, grinding, chipping	Major	Visual	--DO-	-DO-	-DO-	-DO-	P	V	R	
19.7	Paint	Major	Visual	-DO-	-DO-	-DO-	-DO-	P	V	R	
B	**In Process**										
1	**Winding(LV and HV)**										
1.1	Check for Visual, physical and dimensional Parameters and no. of parallel conductors.										
1.1.1	Measurement of axial height, OD & ID& current density calculation.	Major	Measurement	100%	MFR. Data/Drg/BSES approved document	MFR. Data/Drg/BSES approved document	QC report/Test report	--	P	W	
1.1.2	Copper Conductor size (Bare & covered)	Major	Measurement	100%	-DO-	-DO-	-DO-	--	P	W	
1.1.3	No. of Turns / Disc	Major	Measurement	100%	-DO-	-DO-	-DO-	--	P	R	
1.2	Winding height	Major	Measurement	100%	-DO-	-DO-	-DO-	--	P	W	

SL NO	CHARACTRISTICS	CLASS	TYPE OF CHECK	QUANTUM OF CHECK	REFERENCE DOCUMENT	ACCEPTANCE NORMS	FORMAT OF RECORD	AGENCY			REMARKS
								S	M	O	
1	2	3	4	5	6	7	8	9			10
1.3	Visual inspection of Brazed joints as applicable	Major	Visual	100%	-DO-	-DO-	-DO-	--	P	R	
1.4	Tap Leads termination in case of tap winding	Major	Visual	100%	-DO-	-DO-	-DO-	--	P	R	
1.5	Current density calculation	--	--	--	--	--	--	--	P	W	
1.6	**Weight**	Major	Visual	100%	-DO-	-DO-	-DO-	--	P	W	
2.0	**Core Assembly**										
2.1	Visual & Key Dimensional check										
2.1.1	Diagonal distance	Major	Measurement	100%	MFR.Drg/BSES approved document	MFR.Drg/BSES approved document	QC report/Test report	--	P	W	
2.1.2	Window centre distance	Major	Measurement	100%	-DO-	-DO-	-DO-	--	P	W	
2.1.3	Window height	Major	Measurement	100%	-DO-	-DO-	-DO-	--	P	W	
2.2	Stack Thickness	Major	Measurement	100%	-DO-	-DO-	-DO-	--	P	W	
2.3	High Voltage test at 2 KV AC for I min between core & core clamp, Yoke	Major	Electrical	100%	-DO-	-DO-	-DO-	--	P	W	

SL NO	CHARACTRISTICS	CLASS	TYPE OF CHECK	QUANTUM OF CHECK	REFERENCE DOCUMENT	ACCEPTANCE NORMS	FORMAT OF RECORD	AGENCY			REMARKS
								S	M	O	
1	2	3	4	5	6	7	8	9			10
	bolt										
2.4	Pre-Core loss measurement	Major	Electrical	100%	-DO-	-DO-	-DO-	--	P	W	
2.5	Weight	Major	Visual	100%	-DO-	-DO-	-DO-	--	P	W	
3.0	**Core-Coil Assembly**										
3.1	Top & Bottom insulation arrangement	Major	Visual	100%	MFR.Data /DRG/BSES approved document	MFR.Data /DRG/BSES approved document	QC report	--	P	R	
3.2	Lead arrangement	Critical	Visual	100%	-DO-	-DO-	-DO-	--	P	R	
3.3	Tap & Lead End Brazing & Insulation	Critical	Visual	100%	-DO-	-DO-	-DO-	--	P	R	
3.4	Dimension of Coil After Shrinkage	Major	Measurement	100%	-DO-	-DO-	-DO-	--	P	R	
3.5	Verification of Major electrical clearances	Major	Visual & Measurement	100%	-DO-	-DO-	-DO-	--	P	R	
3.6	HV/LV Connection	Major	Visual	100%	-DO-	-DO-	-DO-	--	P	R	
3.7	Cleanliness	Major	Visual	100%	-DO-	-DO-	-DO-	-	P	R	
4.0	**Core-Coil Assembly**										

SL NO	CHARACTRISTICS	CLASS	TYPE OF CHECK	QUANTUM OF CHECK	REFERENCE DOCUMENT	ACCEPTANCE NORMS	FORMAT OF RECORD	AGENCY			REMARKS
								S	M	O	
1	2	3	4	5	6	7	8	9			10
	Before Ovening										
4.1	Initial Ratio test	Major	Measurement	100%	-DO-	-DO-	-DO-	--	P	R	
5.0	**Core-coil assembly during drying**										
5.1	Measurement & recording of temperature & drying time during vacuum treatment.	Major	Visual	100%	MFR.Data /DRG	MFR.Data /DRG	QC report	--	P	R	
5.2	Check for completeness of drying	Major	Visual	100%	MFR.Data /DRG	MFR.Data /DRG	QC report	--	P	R	
5.3	Certification of all test	Major	Visual	100%	MFR.Data /DRG	MFR.Data /DRG	QC report	--	P	R	
6.0	**Core-Coil Assembly After Ovening**										
6.1	Ratio Test,Vector Group & Magnetic Balance test	Major	Electrical	100%	-DO-	-DO-	QC report /Test report	--	P	W	
6.2	Recording of time/Temp, Vacuum	Major	Measurement	100%	-DO-	-DO-	-DO-	--	P	R	
6.3	Record of Moisture extract	Major	Measurement	100%	MFR. STD	MFR. STD	QC report	--	P	R	

SL NO	CHARACTRISTICS	CLASS	TYPE OF CHECK	QUANTUM OF CHECK	REFERENCE DOCUMENT	ACCEPTANCE NORMS	FORMAT OF RECORD	AGENCY			REMARKS
								S	M	O	
1	2	3	4	5	6	7	8	9			10
6.4	Verification of completeness & Drying	Major	Verify	100%	MFR. STD	MFR. STD	QC report	--	P	R	
6.5	Insulation resistance measurement by Megger	Major	Electrical	100%	MFR. STD	MFR. STD	Test report	--	P	R	
6.6	Earthing connection	Major	Visual	-DO-	MFR. STD	MFR. STD	QC Report	--	P	R	
7.0	**Tanking**										
7.1	Electrical clearance arrangement	Major	Measurement	100%	MFR. DRG	MFR. DRG	QC report	--	P	R	
7.2	Verification of Core-Frame Clamping arrangement	Major	Visual	100%	-DO-	-DO-	-DO-	--	P	R	
7.3	Core to frame insulation resistance test & HV test at 2 KV for min	Major	Electrical	100%	-DO-	-DO-	-DO-	--	P	R	
8.0	**Final Assembly for testing**										
8.1	Fittings of external accessories	Major	Visual	100%	MFR. STD /DRG	MFR. STD /DRG	Job Card	--	P	R	
8.2	Internal Oil leakage test on main unit	Major	Visual	100%	CBIP	CBIP	QC report	--	P	R	

SL NO	CHARACTRISTICS	CLASS	TYPE OF CHECK	QUANTUM OF CHECK	REFERENCE DOCUMENT	ACCEPTANCE NORMS	FORMAT OF RECORD	AGENCY			REMARKS
								S	M	O	
1	2	3	4	5	6	7	8	9			10
8.3	Oil filtration & pressure test	Major	Visual	-DO-	IS 1180	IS 1180	-DO-	-	P	R	
C	**Final testing**										
1	**Routine Test**										
1.1	Voltage Ratio test and check of phase displacement	Major	Electrical	100%	IS 2026/IS 1180	IS 2026/IS 1180	Test Report	--	P	W	
1.2	Winding Resistance at all tap corrected to 75°C	Major	Electrical	100%	IS 2026/IS 1180	IS 2026/IS 1180	Test report	--	P	W	
1.3	No Load Loss & Current @90%,100%&112.5% of rated voltage	Major	Electrical	100%	IS 2026/IS 1180	IS 2026/IS 1180	Test report	--	P	W	To be repeated after type test.
1.4	Impedance Voltage/Short Circuit Impedance(Principal Tap)	Major	Electrical	100%	IS 2026/IS 1180	IS 2026/IS 1180	Test report	--	P	W	
1.5	Load Loss measurement at 50% and 100% of load @Principal, Max, MinTap	Major	Electrical	100%	IS 2026/IS 1180	IS 2026/IS 1180	Test report	--	P	W	

SL NO	CHARACTRISTICS	CLASS	TYPE OF CHECK	QUANTUM OF CHECK	REFERENCE DOCUMENT	ACCEPTANCE NORMS	FORMAT OF RECORD	AGENCY			REMARKS
								S	M	O	
1	2	3	4	5	6	7	8	9			10
1.6	Induced over voltage	Major	Electrical	100%	IS 2026/IS 1180	IS 2026/IS 1180	Test report	--	P	W	To be repeated after type test
1.7	Separate Source Voltage Test	Major	Electrical	100%	IS 2026/IS 1180	IS 2026/IS 1180	Test report	--	P	W	
1.8	Insulation Resistance &PI(10 min / 1 min)	Major	Electrical	100%	--	--	Test report	--	P	W	IR shall be more than 2000 MΩ PI Shall be more than1.5
1.9	Voltage Vector Relationship & Polarity	Major	Electrical	100%	IS 2026/IS 1180	IS 2026/IS 1180	Test report	--	P	W	
1.10	Magnetic Balance Test	Major	Electrical	100%	IS 2026/IS 1180	IS 2026/IS 1180	Test report	--	P	W	
1.11	Oil leakage test on transformer with complete fitting and accessories	Major	Visual	100%	CBIP	CBIP	Test report	--	P	W	
1.12	Polarity check & Ratio Test of LVWTI CT/	Major	Electrical	100%	IS 2026/IS 1180	IS 2026/IS 1180	Test report	--	P	W	

SL NO	CHARACTRISTICS	CLASS	TYPE OF CHECK	QUANTUM OF CHECK	REFERENCE DOCUMENT	ACCEPTANCE NORMS	FORMAT OF RECORD	AGENCY			REMARKS
								S	M	O	
1	2	3	4	5	6	7	8	9			10
	Metering CT										
1.13	BDV test on Transformer Oil	Major	Electrical	100%	IS 2026/IS 1180	IS 2026/IS 1180	Test report	--	P	W	
1.14	Power frequency withstand on auxiliary circuit	Major	Electrical	100%	IS 2026/IS 1180	IS 2026/IS 1180	Test report	--	P	W	
1.15	Heat Run Test (Temp. Rise Test)	Major	Testing	One Unit (each lot)	IS 2026/IS 1180	IS 2026/IS 1180	Test Report	--	P	W	
1.16	Pressure relief device test	Major	Testing	One Unit (each lot)	MFR. STD	MFR. STD	Test Report	--	P	W	
1.17	Visual and dimensional check	Major	Visual	100%	Approved drawings	Approved drawings	Test Report	--	P	W	
1.18	Measurement of Cap & tandelta of Wdg, Oil and HV bushing	Major	Electrical	One unit	--	--	Test report	--	P	W	
1.19											
2.0	**Type test (One unit of each type and rating of Transformer at CPRI/ERDA)**										
2.1	Heat Run Test (Temp. Rise Test)	Major	Testing	One Unit	IS 2026	IS 2026	Test Report	**CPRI/ERDA**			

SL NO	CHARACTRISTICS	CLASS	TYPE OF CHECK	QUANTUM OF CHECK	REFERENCE DOCUMENT	ACCEPTANCE NORMS	FORMAT OF RECORD	AGENCY			REMARKS
								S	M	O	
1	2	3	4	5	6	7	8	9			10
2.2	Dynamic & Thermal (3 sec) Short Circuit Test	Major	Testing	One Unit	IS 2026	IS 2026	Test Report	**CPRI/ERDA**			
2.3	Impulse withstand Test on all HV & LV Limb for Chopped wave.	Major	Testing	One Unit	IS 2026	IS 2026	Test Report	**CPRI/ERDA**			
2.4	DGA Test Before & After temperature rise	Major	Testing	One Unit	Relevant std.	Relevant std.	Test Report	**CPRI/ERDA**			Test shall be conducted once per PO
3.0	**Special Test (One unit of each type and rating of Transformer)**										
3.1	Zero Phase Sequence Test	Major	Testing	One Unit	IS 2026	IS 2026	Test Report	--	P	W	
3.2	Noise Level Test	Major	Testing	One Unit	NEMA TR-1	NEMA TR-1	Test Report	--	P	W	
3.3	No Load Harmonic Test	Major	Testing	One Unit	IS 2026	IS 2026	Test Report	--	P	W	
3.4	HV Test on all auxiliary equipment and wiring after complete assembly	Major	Testing	One Unit	--	--	Test Report	--	P	W	
D	**Dispatch & Packing**										
1.1	Identification & packing	Major	Visual	100%	As per packing list	As per packing list	Packing List	--	P	--	

SL NO	CHARACTRISTICS	CLASS	TYPE OF CHECK	QUANTUM OF CHECK	REFERENCE DOCUMENT	ACCEPTANCE NORMS	FORMAT OF RECORD	AGENCY			REMARKS
								S	M	O	
1	2	3	4	5	6	7	8	9			10
1.2	Check for proper Packing	Major	Visual	100%	As per packing list	As per packing list	Packing List	--	P	--	
1.3	Visual check before dispatch	Major	Visual	100%	As per packing list	As per packing list	Packing List	--	P	--	

Note:

- Transformer from each lot may be opened for core and winding verification. BSES approval is be taken prior to opening the transformer.
- Type Test shall be valid for 10 years.

All IS and IEC standards with their latest revisions/amendments shall be applicable

LEGEND:

S: Supplier
M: Main Contractor (Manufacturer)
O: Owner (BSES)

P - Perform
V - Verify
R – Review
W- Witness

Schedule A Guaranteed Technical Particulars (Data by Seller)

Sr.	Particulars	Specified / Required	Offered
1.0	General		
1.1	Make		
1.2	Type	Oil immersed, core type, step down located generally outdoor but may be located indoor also with poor ventilation. Bidder shall confirm full rating available in indoor location also	
2.0	Nominal Continuous Rating, KVA		
2.1	HV winding	250/400/630/1000/1600/2000kVA	
2.2	LV winding	250/400/630/1000/1600/2000kVA	
3.0	Rated voltage (kV)		
3.1	HV Winding	11 kV	
3.2	LV Winding	415 volt	
4.0	Rated current (Amps)	250/400/630/1000/1600/2000kVA	
4.1	HV Winding		
4.2	LV Winding		
5.0	Connections		
5.1	HV Winding	Delta	
5.2	LV Winding	Star with neutral	
5.3	Vector Group reference	Dyn11	
6.0	Impedance at principal tap rated current and frequency, ohm @75 deg C		
6.1	Impedance	4.5%/4.5% / 4.5%/ 5.0/6.25/6.25 % with IS tolerance	
6.2	Reactance		
6.3	Resistance		
6.4	X/R ratio		
6.5	Impedance at lowest tap at rated		

	current and frequency		
6.6	Impedance at highest tap at rated current and frequency		
7.0	Resistance of the winding at 75^0 C in ohm		
7.1	a) HV		
7.2	b) LV		
8.0	Zero sequence impedance in ohm		
8.1	a) HV		
8.2	b) LV		
9.0	Guaranteed maximum Total losses at principal tap at 75°C, kW		
9.1	50 % of Load	as per Spec Cl 3.25	
9.2	100% of Load	as per Spec Cl 3.26	
9.3	No Load Loss (Max)		
9.4	Total I^2R losses of windings @ 75 deg C, KW		
9.5	Total stray loses @ 75 deg C, KW		
9.6	Total Load losses (Max.), KW		
9.7	No load loss at maximum permissible voltage and frequency (approx.),kW		
10.0	Temperature rise over reference ambient of 40 ^{0}C		
10.1	Top oil by thermometer ^{0} C	40 ^{0}C	
10.2	Winding by resistance^0 C	45 ^{0}C	
11.0	Efficiency		
11.1	Efficiency at 75^0C and unity power factor %		
11.1.1	at 110% load		
11.1.2	at 100% load		
11.1.3	at 80% load	Not Less than 99.5%	
11.1.4	at 60% load		
11.1.5	at 40% load		

11.1.6	at 20% load		
11.2	Efficiency at 75^0C and 0.8 power factor lag %		
11.2.1	at 110% load		
11.2.2	at 100% load		
11.2.3	at 80% load		
11.2.4	at 60% load		
11.2.5	at 40% load		
11.2.6	at 20% load		
11.3	Maximum efficiency at 75^0C %		
11.4	Load and power factor at which it occurs		
12.0	Regulation , (%)		
12.1	Regulation at full load at 75^0 C		
12.1.1	at unity power factor		
12.1.2	at 0.8 power factor lagging		
12.2	Regulation at 110% load at 75^0 C		
12.2.1	at unity power factor		
12.2.2	at 0.8 power factor lagging		
13.0	Tappings		
13.1	Type		
13.2	Capacity		
13.3	Range-steps x % variation		
13.4	Taps provided on HV winding (Yes / No)		
13.5	Rated current of rotary switch		
14.0	Cooling system		
14.1	Type of cooling	ONAN	
14.2	No. of cooling unit Groups		
14.3	Capacity of cooling units		
14.4	Mounting of radiators		
14.5	Number of Radiators		
14.8	Total radiating surface , sqmm		
14.9	Thickness of radiator tubes, mm	Minimum 1.2 mm	

15.0	Details of Tank		
15.1	Material	Robust mild steel plate without pitting and low carbon content	
15.2	Thickness of sides mm		
15.3	Thickness of bottom mm		
15.4	Thickness of cover mm		
15.5	Confirmation of Tank designed and tested for Vacuum, Pressure (Ref: CBIP Manual) , (Yes/ No)		
15.5.1	Vacuum mm of Hg. / (kN/m^2)	As per IS	
15.5.2	Pressure mm of Hg.		
15.6	Is the tank lid sloped?	Yes	
15.7	Inspection cover provided (Yes / No)	as per spec	
15.8	Location of inspection cover (Yes / No)		
15.9	Min. dimensions of inspection cover (provide list of all inspection cover with dimension), mm x mm		
16.0	Core		
16.1	Type:	Core	
16.2	Core material grade	Premium grade minimum M3 or better	
16.3	Core lamination thickness in mm		
16.4	Insulation of lamination	With insulation coating on both sides	
16.5	Design flux density at rated condition at principal tap, Tesla		
16.6	Maximum flux density at 12.5 % overexcitation /overfluxing, Tesla	1.9 Tesla Max allowed	
16.7	Equivalent cross section area mm^2		

16.8	Guaranteed No Load current at 100% rated voltage , Amps		
16.8.1	HV		
16.8.2	LV		
16.9	Guaranteed No Load current At 110% rated voltage, Amps		
16.9.1	HV		
16.9.2	LV		
17.0	Type of Winding		
17.1	HV		
17.2	LV		
17.3	Conductor material	Electrolytic Copper	
17.4	Current density (HV/LV)	Maximum allowed 3.0 A per sq mm at all taps	
17.5	Gauge/area of cross section of conductor		
17.5.1	a) HV		
17.5.1	b) LV		
17.6	Insulating material		
17.6.1	HV Turn		
17.6.2	LV Turn		
17.6.3	LV Core		
17.6.4	HV - LV		
17.7	Insulating material thickness, mm		
17.7.1	HV Turn		
17.7.2	LV Turn	-	
17.7.3	LV to Core		
17.7.4	HV to LV		
18.0	Minimum design clearance, mm		
18.1	HV to earth in Air		
18.2	HV to earth in oil		
18.3	LV to earth in Air		
18.4	LV to earth in oil		
18.5	Between HV & LV in Air		

18.6	Between HV & LV in oil		
18.7	Top winding and yoke		
18.8	Bottom winding and yoke		
19.0	**Insulating oil**		
19.1	Quantity of oil Ltrs		
19.1.1	In the Transformer tank		
19.1.2	In each radiator		
19.1.4	Total quantity		
19.2	10% excess oil furnished?	Yes in separate non returnable drums with each transformer	
19.3	Type of Oil	As per cl 4.2.7	
20.0	**Bushing / Support Insulator**		
20.1	Make	-	
20.2	Type		
20.2.1	HV side	As per Cl. 4.2.8.1 of the spec	
20.2.2	LV side	As per Cl. 4.2.8.2 of the spec	
20.3	Reference Standard		
20.4	Voltage class, kV		
20.4.1	HV side Bushing/ Support Insulator	12 kV	
20.4.2	LV side line and neutral bushing/ Support Insulator	1.1 kV	
20.5	Creepage factor for all bushing / Support Insulator mm/KV	31 mm / kV	
20.6	Rated thermal short time current		
20.6.1	HV bushing	25 times rated current for 2 secs.	
20.6.2	LV line and neutral bushing	25 times rated current for 2 secs.	
20.7	Weight, Kg		
20.7.1	HV bushing		
20.7.2	LV line and neutral bushing		
20.8	Free space required for bushing removal, mm		
20.8.1	HV bushing		
20.8.2	LV line and neutral bushing		

21.0	**Terminal connections**		
21.1	HV	Cable size as per Cl no 3.28	
21.2	LV	Cable size as per Cl no 3.30	
21.3	LV Neutral	Cable size as per Cl no 3.30	
22.0	**HV cable box**	Required	
22.1	Suitable for cable type,size	Cable size as per Cl no 3.28	
22.2	Termination height	750 mm min.	
22.3	Gland plate dimension, mm x mm		
22.4	Gland plate Material	MS	
22.5	Gland plate thickness	3 mm min.	
22.6	Phase to phase clearance inside box,mm	180 mm	
22.7	Phase to earth inside box,mm	120 mm	
23.0	**LV Cable box**	Required	
23.1	Suitable for cable type , size	Cable size as per Cl no 3.30	
23.2	Termination height	1000 mm, min.	
23.3	Gland plate dimension, mmxmm		
23.4	Gland plate material	Aluminium	
23.5	Gland plate thickness	5 mm min.	
23.6	Phase to phase	25 mm	
23.7	Phase to earth	25 mm	
24.0	L.V neutral Cable termination arrangement	Separate cable box not required (LV-N to be provided in LV cable box.)	
25.0	Current Transformer on LV phases		
25.1	Type		
25.2	Make		
25.3	Reference Standard		
25.4	CT Ratio		
25.5	Burden, VA		
25.6	Class of Accuracy		
25.7	CT terminal box size		

26.0	Pressure release device		
26.1	Minimum pressure the device is set to rupture		
26.1.1	For Main Tank		
26.1.2	Alarm and trip contact ratings of protective devices		
27.0	Fittings Accessories Each Transformer furnished as per Clause No 5. (Bidder shall attach separate sheet giving details, make and bill of materials)		
27.1	OTI/WTI Scanner		
27.1.1	Make		
27.1.2	Model no		
27.1.3	Auxiliary supply		
27.1.4	Manual submitted (Yes/No)		
27.2	Buchholz Relay		
27.2.1	Make		
27.2.2	Model no		
27.2.3	Auxiliary supply		
27.2.4	Manual submitted (Yes/No)		
27.3	Auxiliary relays for Fault/indication identification (PRV, Buchholz relay, MOG)		
27.3.1	Make		
27.3.2	Model no		
27.3.3	Auxiliary supply		
27.3.4	Potential free contacts		
27.3.5	Manual submitted (Yes/No)		
28.0	Painting: as per clause for the transformer, cable boxes, radiator, Marshalling box (Yes/No)		
29.0	Max over all transformer dimensions	**As per Clause 3.32**	

29.1	Length, mm		
29.2	Breadth, mm		
29.3	Height, mm		
30.0	Transformer Tank Dimensions		
30.1	Length, mm		
30.2	Breadth, mm		
30.3	Height, mm		
31.0	Weight data		
31.1	Core, kG		
31.2	Frame parts, kG		
31.3	Core and frame, kG		
31.4	Total Winding, kG		
31.5	Core , Frame, Winding, kG		
31.6	Tank, kG		
31.7	Tank lid, kG		
31.8	Empty conservator tank, kG		
31.9	Each radiator empty, kG		
31.10	Total weight of all radiators empty, kG		
31.11	Weight of oil in Tank, kG		
31.12	Weight of oil in Conservator, kG		
41.13	Weight of oil in each Radiators, kG		
31.14	Total weight of oil in Radiators, kG		
31.16	Total Transport weight of the transformer, kG		
32.0	Volume Data		
32.1	Volume of oil in main tank, litres		
32.2	Volume of oil between highest and lowest levels of main conservator, litres		
32.4	Volume of oil in each radiator, litres		
32.5	Total volume of oil in radiators,		

	litres		
32.7	Transformer total oil volume, litres		
33.0	Shipping Data		
33.1	Weight of heaviest package, kG		
33.2	Dimensions of the largest package (L x B x H) mm		
34.3	Tests		
34.1	All in process tests confirmed as per Cl. (Yes/ No)		
34.2	All Type Tests confirmed as per Cl. (Yes / No)		
34.3	All Routine Tests confirmed as per Cl. (Yes/ No)		
34.4	All Special Tests confirmed as per Cl. (Yes/ No)		

Schedule B Guaranteed Technical Particulars of Transformer Oil

Bidder to submit hard copy duly filled & signed along with techno commercial offer.

Bidder to submit separate GTP for each type of insulating oil –

Sr No	Item description	Specification requirement	Data by Vendor
1.0	Manufacturer Name		
1.1		Address	
1.2		Contact person	
1.3		Contact telephone no	
2.0	**Function**		
2.1	Viscosity		
2.1.1	Viscosity at 40^0C	15 mm^2/s, Max	
2.1.2	Viscosity at 0^0C	1800 mm^2/s, Max	
2.2	Pour Point	- 10^0C, Max	
2.3	Water content	30 mg/Kg, Max	
2.4	Breakdown voltage		
2.4.1	New unfiltered oil	30 kV, Min	
2.4.2	After filtration	70 kV, Min	
2.5	Density at 20^0C	0.895 g/ml, Max	
2.6	Dielectric dissipation factor at 90^0C	0.005, Max	
2.7	Particle Content	Manufacturer to specify the data	
3.0	**Refining/Stability**		
3.1	Appearance of oil	Clear, free from sediment and suspended matter	
3.2	Acidity	0.01 mg KOH/g, Max	
3.3	Interfacial tension at 27^0C	0.04 N/m, Min	
3.4	Total sulphur content	Manufacturer to specify the data	
3.5	Corrosive sulfur	Not-corrosive	
3.6	Potentially Corrosive sulfur	Not-corrosive	
3.7	DBDS	Not detectable (<5 mg/kg)	
3.8	Inhibitor	Not detectable (<0.01%)	
3.9	Metal Passivator	Not detectable (<5 mg/kg)	
3.10	Other additives	Manufacturer to specify the data	
3.11	2-furfural and related Compounds content	Not detectable (<0.05 mg/kg) for each individual compound	
4.0	**Performance**		
4.1	Oxidation stability, test duration 164 h		
4.1.1	Total acidity	1.2 mg KOH/g, Max	
4.1.2	Sludge	0.8%, Max	
4.1.3	DDF at 90^0C	0.5, Max	
4.2	Gassing Tendency	Manufacturer to specify the data	
4.3	ECT	Manufacturer to specify the data	
5.0	**Health,safety and Environment**		

Sr No	Item description	Specification requirement	Data by Vendor
5.1	Flash point	135^0C, Min	
5.2	PCA content Max	3%, Max	
5.3	PCB content	Not detectable (<2 mg/Kg)	

Schedule C Recommended Spares (Data by Seller)

List of recommended spares as following –

Sr No	Description of spare part	Unit	Quantity
1		No	
2		No	
3		No	
4		No	
5		No	
6		No	

BSES

Technical Specification

Of

Substation Automation system (RTU/SCADA)

Specification no – BSES-TS-311-RTU/SCADA-R2

Rev:		2
Date:		21 Nov 2025
Prepared by	Aditya Uniyal	
Reviewed by	Sentil Kumaran K A	
Reviewed by	Shanmugam B	
Approved by	Bhuwanesh Dwivedi	

Contents

1.0 SCOPE 3
2.0 CODES AND STANDARDS 3
3.0 CYBER SECURITY 5
4.0 PANEL CONSTRUCTION 7
5.0 CABLES CONNECTORS ACCESSORIES 10
6.0 TERMINAL BLOCKS 16
7.0 PAINT 18
8.0 NAMEPLATES AND MARKINGS 18
9.0 EARTHING 19
10.0 RTU PANEL 20
11.0 MANAGED ETHERNET SWITCH 27
12.0 INTERPOSING RELAY / CONTRACTORS /AUXILIARY RELAY 29
13.0 CONTROL RELAY PANEL (CRP) 31
14.0 GLOBAL POSITIONING SYSTEM (GPS) 33
15.0 RTU PANEL ACCESSORIES 33
16.0 APPROVED MAKES OF COMPONENTS 34
17.0 DEVIATIONS 35
18.0 DRAWINGS AND DATA SUBMISSION MATRIX 35
19.0 QUALITY ASSURANCE, INSPECTION &TESTING 36
20.0 PACKING 38
21.0 SHIPPING 39
22.0 HANDLING AND STORAGE 39
23.0 ABBREVATIONS 40
24.0 ANNEXURE – A, B, C, D, E 41

1.0 SCOPE

- The scope of this document includes the detailed specifications of RTU Panel, RTU data Acquisition modules ,SAS Communication Network panel, communication network hardware , Control cables, connectors , SCADA adaptation materials , Software licenses ,standard communication protocols, Station Bus Communication network architecture, Signal data types, Signal interfacing, RTU & SAS Data engineering, Erection , Testing and commissioning procedures as per IS/IEC Standards, OT security, time synchronization, standardized signal list of all the assets of EHV Grid Station, Standardized Bill of Quantity etc
- Scope of this document also covers the specifications of testing and measurement equipments.
- The Scope of this document covers the Factory Acceptance Test standard procedures and checklist , Site Acceptance Test procedures and checklists.
- The Scope of this document also covers the Warranty /Guarantee clauses, Quality & safety assurances.
- The supply of RTU materials – RTU with Processors (Basic License IEC 870-5-101/103/104(latest edition), MODBUS, IEC 61850-8-1/2 (latest edition), IEC -104 Master, IEC 104 Slave + PLC License along with IO Modules. Other accessories such as communication rack, power supply modules, MFM, GPS, converters for DC to DC & Other FO converters, cables – FO, CAT-6, RS485, control cables and connectors, sensors, server storage SD cards if any shall be in RTU vendor's scope of supply.
- RTU Shall be designed & manufactured in accordance with IEC, IEEE, ANSI & NEMA.

2.0 CODES AND STANDARDS

RTU, SAS system, panels, cables and accessories strictly designed and manufactured in accordance IS/IEC standards & purchaser requirements for the smooth running of the primary system equipments for proper power distribution.

Sl no.	Heading	Function Description
2.1	IEC 60870	International Standard for telecontrol systems used in Power systems Automation
2.2	IEC 62351-3	Standard for securing TCP/IP based communication protocols
2.3	IEC 62443-4-1	Standard for implementing a Secure Development lifecycle
2.4	IEC62443-4-2	Standard for Technical security requirements for IACS components
2.5	IEC 61000-4-2	Standard on Immunity against Electrostatic Discharge.
2.6	IEC 6100-4-3	Standard on Immunity against Electromagnetic Fields
2.7	IEC 6100-4-4	Standard on Immunity against Electrical fast transients

2.8	IEC 6100-4-5	Standard on Immunity against Electrical Surges
2.9	IEC 6100-4-6	Standard on Immunity against Electromagnetic Compatibility testing and measurement
2.10	IEC 6100-4-18	Standard on immunity requirements, test and measurement techniques of electrical and electronic equipments.
2.11	IS 1554 Part-1	Standard for PVC insulated heavy duty control cables
2.12	*IS 5578/198*	Indian standard for marking of insulated conductors
2.13	EIA/TIA 568 C-2	Standard for Twisted Pair telecommunication Cables CAT6 etc
2.14	IEC 60603-7-4	Standard for CAT6 Connectors
2.15	EIA/TIA-485	Standard for Twisted Pair telecommunication RS485 cables etc
2.16	IEC 11801	Standard for cabling systems within premises
2.17	IS 12943:1990, IEC 62444	Standard for Brass glands for PVC Cables
2.18	IEC61850-3	Standard to ensure interoperability of communication infrastructure in substation Automation systems.
2.19	IEEE 1613	Standard for environmental and testing requirements for IED's in substation automation
2.20	IEC61537, ISO 9227	Standard for perforated cable trays
2.21	IEC 62053-22	Standard for electricity metering equipments
2.22	IS14697	Indian Standard for Meters (0.2S & 0.5 class)
2.23	IEC60529	**International Standard that defines the Ingress Protection**
2.24	IEC 61326	Standard for EMI/EMC requirements of electrical equipments
2.25	IEC 61010	Standard for Safety of Measurement, control equipments, Laboratory requirements etc
2.26	DIN41494	Defines Specifications for 19" equipment mounting
2.27	IEC62053	Standard for Power Meters
2.28	IS5831:84, IS8130, IS1554-1, IS3975	Standards for Signal and Control Cables

3.0 CYBER SECURITY

Sl no	Heading	Function description
3.1	Reference Standards	IEC20243, IEC62443-4, IEC62351, ISO/IEC 27001, IEC:27036 and other relevant standards of IS/IEC/ANSI/IEEE,etc must be incorporated and Rules & Standards of Govt. of India, Ministry of Power/Other Central, State Departments & International best practice on Cyber security in Electrical Power Systems.
3.2	Policies	1. **Network Segmentation** – Isolating IT network from grid station automation OT Network. 2. **Asset Management** – Patch and firmware management. 3. **Layered Security-** creation of VLAN's, RBAC, TLS , RADIUS /TACACS based Authentication. 4. **Secure remote access** 5. **Remote monitoring** 6. **Incident Response and recovery**
3.3	OT security threats	Malware/ Ransomware, Phishing, Distributed Denial of service, Network intrusion, Supply chain attacks, Insider Threats, Advanced persistent threats, legacy systems
3.4	OT Security systems	Firewalls (Grid connected Router and RTU –inbuilt), RBAC, IPS/IDS systems, RADIUS/TACACS based authentication etc
3.5	Critical Assets	SCADA, Grid Routers, modems, RTU, Ethernet Switches, GPS, IED's, Meters, sensors , HMI, related operating systems ,Softwares, firmwares etc
3.6	Type test reports IEC:62443, IEC:62351 (India made devices)	The IEDs, RTU, FRTUs, PLCs, SCADA, Communication network switches, any related programmable software's/hardware's, etc systems that involved in electrical power sector for control & monitoring critical information shall be verified for a sample size for testing minimum one number from each make, type and having same firmware version for the supply one lot size of 200 numbers or less.
3.7	Type test reports IEC:62443, IEC:62351 (India made devices)	The Smart meters, other energy meters the sample six for testing shall be minimum one number for each make, type and have same firmware version for the supply one lot size of 5000 numbers or less.
3.8	Type test reports IEC:27036 IEC:62443 IEC:62351 IEC:20243 (Other country made devices)	The IEDs, RTU, FRTUs, PLCs, SCADA, Meters, Communication network switches, any related programmable software's/hardware's, etc systems that involved in electrical power sector for control & monitoring critical information for importing products/system shall be verified for a sample size 5% of the supply lot for each make, type and having same firmware version for the supply lot.

3.9	RTU domain cyber security terms & conditions	As the RTU/SCADA system will use public domain, such as LAN/VSAT/GPRS/CDMA/SATELLITE based networks for communication media, therefore it is mandatory to guard the data / equipment from intrusion/damage/breach of security & shall have SSL/VPN based security.
3.10	IED'S like Protection devices, Control devices.	Communication protocol conformance standards shall be followed as per IEC 61850-5 to IEC 61850-10 and respective clauses.
3.11	RTUs,FRTUs,SCADA, PLC, etc with IEC communications.	Communication protocol conformance standards shall be followed as per IEC:60870-5-101/ IEC:60870-5-103/ IEC: 60870-5-104 and respective clauses.
3.12		Protocol Security conformance standards shall be followed as per IEC:60870-7, IEC:62351-100 part1&3 and respective clauses.
3.13	Smart meters with IEC 62056	Protocol Security conformance & Communication protocol conformance standards shall be followed as per IS:15959 series, IS:16444 series and respective clauses.
3.14	Mandatory tests case	The test is referencing a clause that is mandatory in IEC: TS 62351-5, IEC: TS 60870-5, IEC: 62351-3 which defines the requirements related to the authentication/encryption protocol, procedures and methods to be implemented at Fiber, TCP/IP(transport) level, Modbus, etc.
3.15	Approved/ Designated Laboratories	Central Power Research Institute (CPRI) approved laboratory for IEDs, RTU, FRTUs, SCADA, PLC systems. Central Power Research Institute (CPRI) Electrical Research & Development Association (ERDA), Yadav Measurements Pvt Ltd(YMPL) for Smart meter devices. If any other departments if approved shall be as per Ministry of Power/Other related departments for confirmation of Cyber security in power systems. If any changes according to Govt.rules/notifications/MoP,etc the same shall be incorporated time to time without cost implications.
3.16	Miscellaneous	Words and expressions used and not identified in these above regulations but defined in the information technology Act 2000 and the Electricity Act, 2003 shall be followed for cyber security of power system time to time.
3.17	Certificates Validity	Product certifications/type test reports of any Electrical/Electronic devices connected in power systems for respective protection/functions/controls/monitoring shall not be older than 5 years during supply of same items.
3.18	Reports	All necessary type test reports, certifications shall be submitted for RTU panel/ Equipments at Pre Bid / Engineering/ Inspection by supplier/vendor.
3.19	RTU Processor	RTU Processor with enhanced cyber security features, SNMPv3, https, SSL and TLS based encryption for 104 communication and shall comply with IEC 62351-3, IEC 62443-4-1, IEC62443-4-2 std for cyber security

		requirements for Industrial OT systems.

4.0 PANEL CONSTRUCTION

Sl no.	Heading	Function Description
RTU Panel		
4.1	RTU materials	RTU Panel, RTU Chassis, Data Acquisition modules ,Power supply, Voltage Converters, Ethernet switches, GPS,surge protectors for Ethernet, Serial ,analog channels, Terminal blocks , Contactors, Fuse terminal Blocks , Internal cabling
4.2	Panel Type	Freely standing ,floor mounted Swing frame cabinet, front toughened glass, Simplex panels with Height: min.2200mm, Width: min.1000mm to max.1200mm and Depth: min.800mm and Total Height: min.2315mm (Inc. AV pad and Base frame). Size of panel shall be decided during engineering.
4.3	Enclosure type	Dust, moisture and vermin proof. Degree of protection not less than IP54 in accordance with IEC 60529
4.4	Enclosure material	Pre-galvanized, cold-rolled sheet steel of thickness not less than 2mm. Stiffeners shall be provided wherever necessary.
4.5	Doors	Double leaf doors shall be provided at the rear. Doors shall have handles with built-in locking facility. Doors hinged with padlocking type / Locks of the door shall be lever type(min 130º hinges). Door handles shall be of protruding type with three point locking facility as per industrial standards of IS/IEC.
4.6	Thickness of steel sheet	All non-load bearing panels/doors, top and bottom portion, rear cover shall be fabricated from minimum 2.0mm thickness steel sheet and all load bearing panels, frames, top & bottom panels shall be fabricated from minimum 3.0mm thickness steel sheet.
4.7	Mounting plates	Wiring between stationary and movable parts such as wiring across RTU swing frame shall allow the full movement of the frame without bending of the wiring. Cable spiral dressings shall be used for such crossovers
4.8	Drawing placement	In each panel door shall be equipped with >A3 size steel pocket for wiring plan/scheme drawing/ test report, maintenance register, FAT, SAT reports, SOP, placement and removals with safe hands by human.
4.9	Gland Plate	At least four separate gland plates of removable type with gasket shall be provided for each panel. They shall be of sheet steel of thickness not less than 3 mm.
4.10	Cable Entry	All panels shall have provision for bottom cable entry.
4.11	Gaskets	All doors, removable covers of panels shall be fitted with

		long life Rubber Gaskets all around with synthetic Neoprene/EPDM gaskets as per IS:11149 for sealing. However, XLPE gaskets shall be for fixing protective glass doors.
4.12	Cooling	All panels should have air cooling with FAN with Filters / Louvers mounted on rear side of RTU panel with temperature / humidity control facility.
4.13	RTU Air-conditioning	RTU Panel should have inbuilt Air conditioner & AC should be mounted on side wall of RTU panel with temperature/humidity sensor, fan with filter shall be considered as a backup. Rating of Air conditioner shall be decided by OEM as per their configurations.
4.14	Foundation	The panels shall be fixed on the embedded foundation channels with intervening layers anti vibration strips made of shock absorbing materials.
4.15	Base Frame	Base frames shall be supplied along with panels. 100mm channel painted black.
4.16	Mounting	RTU Racks/ Chassis , Ethernet Switches, MCB's , GPS etc shall be flush mounted on the swing frame.
4.17	Device access	All panels shall have maintenance access to the hardware and wiring through lockable full height doors.
4.18	Appearance	Powder coating finishing frame Outer: RAL7032(Siemens Grey), Inner: RAL9003 (Glossy white).Front door should be fixed with shock proof full height toughened glass. Panel to be made shock absorbent using rubber gasket.
4.19	Panel illumination	All panels should be provided 240V AC illumination lamp with white LED lights 15W~20W rating at front and rear for illumination. Limit switches should be provided on the doors to control the switching.
4.20	Heater Circuits	All panels should be provided with heater, thermostat, hygrostat for controlling moisture and should be installed on safe location inside the panel.
4.21	Auxiliary power	All panels shall be supplied with 230V AC, 50Hz Single phase, 6A switches & duplex socket arrangement for maintenance. The same shall be flush mounted on swing frame.
4.22	Power Socket and switch	240V, 5/15A universal type socket to be provided in each panel with on-off switch.
4.23	MCBs and Fuses	Provision for receiving, distribution, isolation and fusing of DC and AC supplies to various control circuits should be made using MCBs, RCDs, RCCBs, of appropriate ratings as per purchaser requirements.
4.24	Edges/Corners	There shall be no sharp corners or edges. All edges shall be rounded to prevent injury.

4.25	Panel Size & Hardware capacity space for future use	The RTU system shall have the capacity of accommodating additional 50% of the basic I/O counts by addition of hardware such as modules, racks, panels, Terminal blocks of basic I/O counts.
4.26	Cable dressing	Plastic channels of suitable sizes to be used as enclosures. PVC sleeves to be used for inter-panel wiring.
4.27	Inter panel wiring	When panels are arranged to be located adjacent to each other inter panel wiring of common bus wires between the panels should be supplied with one end terminated and the other end bunched and coiled with proper lugs crimped and insulation for safe handling at site. Inter panel wiring shall be clearly indicated in the wiring tables. Longitudinal troughs extending throughout the full length of the panel shall be preferred for inter panel wiring. Inter-connections to adjacent panel shall be brought out to a separate set of terminal blocks located near the slots of holes meant for taking the inter-connecting wires. Wiring termination at interface panel end shall be through prefabricated plug-in type connectors.
4.28	Logo & labels	BSES logo shall be fixed at Top - left of panel. Printed metallic name plate with engrossed purchase order details to be fixed on front top right corner of RTU Panel. All equipments shall be labeled.
	Ethernet Switch Panel	
4.29	Panel type	Simplex type wall mounting for Indoor application.
4.30	Door	Full toughened Glass front door, turning angle 160º with Lock provided.
4.31	Sheet steel	CRCA sheet steel with load bearing/non-load bearing – 2mm thickness. Welded frame, reliable structure, material quality cold rolled steel.
4.32	Dimension	Panel Widthx600mm, Heightx625mm, Depthx600mm and above.
4.33	Panel	Panel shall have cable management panels, trays and channels to keep wires neat and organized reducing the risk of overheating due to improper ventilation
4.34	Coating	Powder coating finishing frame Outer: RAL7032(Siemens Grey), Inner: RAL9003 (Glossy white)
4.35	Mounting arrangement	Mounting angle should be 19’ inches and made of formed Steel.
4.36	Cable	Cable 1100V grade Multistrands FRLS PVC.
4.37	Cable Routing & Interconnections	AC/DC Source circuit terminal block: 2.5 SQ.MM
4.38	Cooling Fans	Fan with louvers shall be provided.
4.39	Signal Earth and Safety Earth	Within the RTU Panel Safety Earth and Signal Earth strips/bars shall be physically isolated from each other

		and marked/color coded . Safety Earth strip and wires shall be color coded to Green with yellow stripes , however the signal earth strip and wires shall be color coded to pink or as per manufacturers practice.Two earth strips of Size 500mmx25mmx4mm copper with prefitted screw terminals shall be used for the same. The signal Earth wires of Size 2.5 sqmm multistanded copper shall be connected to signal Earth strip while 4 sqmm multistranded copper shall be used for Safety Earth within the panel . Signal Earthing Strip/bar shall be mounted on insulators of suitable rating.
4.40	Enclosure	All materials used in the enclosures including cable insulation or sheathing, wire troughs, terminal blocks, and enclosures trims shall be made of flame-retardant material and shall not produce toxic gases under fire conditions.
4.41	Logo	BSES logo shall be fixed at Top - left of panel and PO details on the top right.

5.0 CABLES CONNECTORS ACCESSORIES

Sl no.	Heading	Function Description
5.1	**Internal wiring**	
5.1.1	DC Source circuits	2.5 mm^2 multi-stranded copper 1.1KV grade cable, HRPVC insulation, color coded (Red for +DC and Black for –DC). .
5.1.2	AC Source circuits	2.5 mm^2 multi-stranded copper 1.1KV industrial grade cable HRPVC insulation, color coded (Blue for Phase and White for Neutral).
5.1.3	DI, AI & DO RTU internal wiring	Sizes and color as per OEM standards for internal RTU wiring.
5.1.4	Earthing connections	2.5 SQMM FRLS 11KV PVC multi-stranded flexible copper wire,color coded green with yellow stripe for equipment body earth
5.1.5	Other Circuits	Unless otherwise specified shall be of 2.5 SQ.MM
5.1.6	DC Safe wiring methodology	Panel wiring shall be securely supported, installed by lacing, tying, readily accessible and connected to equipment terminals and terminal blocks. Accidental short circuiting of certain wires is likely to result in malfunction of equipment, such as CB

		closing/tripping of or Positive/Negative wires, these wires shall not be terminated on adjacent terminal blocks (Except source input DC positive/negative terminals).
5.1.7	General	Maximum of two wires shall be at one side of terminal block allowed. Not more than two wires shall be connected to any terminals such terminal block, relay contacts, auxiliary relay, etc where ever wiring connected in RTU panels. If necessary additional looping with adjacent terminal blocks shall be allowed as per scheme requirements
5.1.8	FO Patch Cable dressing	The FO patch chord between inter-panel and within the panel shall be run through separate and labelled troughs inside panels and flexible PVC conduits for cross section between panels, Ethernet switch sides, Numerical relays side with proper insulations.
5.2	**External cabling**	
5.2.1	DI cable for digital Input Signals	Cable to be used for interfacing digital input signals from Control and relay panels to RTU shall be Armoured, FRLS, 8C/10C/12C/16C as per requirements ,1.5 mm^2 multi-stranded bare copper,HRPVC labelled (in both numerical and word).Dielectric withstand 2.5kV at 50 Hz for 5 minutes. Shall comply with IS5831:84, IS8130, IS1554-1, IS3975.
5.2.2	DO cable for digital Output Signals	Cable to be used for interfacing digital output signals from Control and relay panels to RTU shall be Armoured,FRLS, **6C/8C** ,1.5 mm^2 ,twisted pair, individual pair screened,multi-stranded bare copper,HRPVC, labelled (in both numerical and word).Dielectric withstand 2.5kV at 50 Hz for 5 minutes. Shall comply with IS5831:84, IS8130, IS1554-1, IS3975
5.2.3	AI Cable for Analog signals	Cable to be used for interfacing Analog input signals from Control and relay panels to RTU shall be Armoured, FRLS,, shielded, 6 core ,1.5 mm^2 ,twisted pair, individual pair screened(foil), multi-stranded bare copper, HRPVC , labelled (in both numerical and word).Dielectric withstand 2.5kV at 50 Hz for 5 minutes. Shall comply with IS5831:84, IS8130, IS1554-1, IS3975
5.2.4	**RS485 (Armoured & Unarmoured)**	
5.2.4.1	Dielectric	Dielectric withstand of 1KV, 50Hz AC for 1 min

5.2.4.2	Pair	2 pair Twisted , 22 AWG(7x32), Tinned copper, PE insulation, Overall Beldfoil + tinned copper braided (min 90%) shielded, PVC outer jacket.
5.2.4.3	Impedance	Characteristics impedance shall be 120Ω.
5.2.4.4	Capacitance	Capacitance between conductors shall be less than 100pF/mtr. Conductor and shield shall be less than 200pF/mtr.
5.2.4.5	Approved make/model	Belden – 129842 (Armored RS485), 9842(Unarmored) or equivalent specifications subject to approval.
5.2.5	**CAT 6 (Armoured & Unarmoured)**	
5.2.5.1	Physical Characteristics	(i) 4 pair, 23 AWG, solid bare copper conductors, twisted pair separated by full X shaped separator, high density polyethylene insulation, Beldfoil shield, tinned copper drain wire, tinned copper braided shielded, CMR rated jacket... Outer sheath Material should be Low Smoke Zero Halogen(LSZH).
5.2.5.2	Electrical Characteristics	Conductor Resistance ≤9.3Ω/100m,Insulation resistance 100MΩ.Dielectric strength 1KV DC/0.75KV AC for 1 min, Mutual Capacitance≤5.6nF/100m, Resistance unbalance: 5% Max, Max operating Voltage - 72V
5.2.5.3	Operating temperature range	Operating temp -20°C to 75°C.
5.2.5.4	Marking	Each meter cable labeled with sequential counter. Cable diameter 6.1mm nominal.
5.2.5.5	Compliances	Meets TIA/EIA 568-C.2 requirements and comply with complaint for 10/100/1000 MBPS bandwidth. CAT 6 cable should be UL Listed and ETL verified and RoHS Compliant. CAT 6 cable should meet ISO/IEC 11801 for CAT 6 requirements, *IS 5578/198 for labling and color coding*
5.2.6	**Fiber Optic Cables**	

5.2.6.1	Armoured FO cable	(i) Multimmode Armoured multimode (OM1) with Corrugated polymer coated Steel tape Unitube LSZH FO cable, Fiber Count 6 NOS , 62.5/125µm. (ii) Operating temp: -60°C to +80°C (iii) Max Tensile load: Short Term; 2700N, Long term : 800N (iv) Cable OD: 12.5mm ±5% (v) Cladding Diameter: 125±1µm. (vi) As per standards IEC 11801,EIA/TIA 568B (vii) Approved make: Preston or equivalent
5.2.6.2	Un-Arrmoured FO cables	(i) Ruggedized FO -Inter panel inside CRP & RTU (ii) Armoured FO –Spiral SS steel tape- from 11KV Switch gear IED's to RTU/SAS Switch Panel (iii) Multimode, Duplex, OM1,62.5/125µm. (iv) Insertion loss <=0.2dB (v) Should have Ceramic connector ferrule. (vi) Repeatability should be less than 0.2dB,100 mating cycle (vii) Working temperature should be -40°C to 80°C.
5.3	**Tags, Labels, ferrules**	
5.3.1	Ferrules (for DI, DO, AI, CAT 6 , RS485)	Ferrules marked to correspond with panel wiring diagram shall be fitted at both ends of each wire. Ferrules shall fit tightly on the wire. White PVC sleeve printed with black text to be used for identifying cables & signals. All ferrules to be laminated with heat shrink tubes of appropriate size.

5.3.2	Tags	Printed corrosion resistance metallic tags (High Quality aluminium – 0.5mm~0.8mm thickness) for all control, comm..cable,etc. Marking shall be made using Laser etching, engraving and the same shall be durable and resistant to fading,etc. Edges shall be smoothened to avoid cuts.
5.3.3	Tag – OFC/ FO Patch Cable	Machine generated durable labels on both end of each cable to ensure clarity, traceability, consistency. Labels must be made of material that resist environmental factors like moisture, heat , UV, abrasion resistant to ensure long lasting.
5.3.4	Labels	Labels of suitable sizes shall be used as a signs for Safety Earth, Signal Earth , FO Patch Cables , static sensitive device handle with care shall be used within the panels. Labels shall be in accordance with IEC guidelines /manufacturers /purchases recommendations during approval stages.
5.4	**Light Interface Unit (LIU)**	
5.4.1	Mounting	12 fiber (6 pair) wall mount / 19” panel mount /DIN rail LIU loaded with LC pigtails and adaptors with adaptor plates as per site requirements.
5.4.2	Steel	Aluminium / Stainless steel base material
5.4.3	LIU inner portion	LIU shall be provided with splice tray, cable spool provision inside for fiber connections.
5.4.4	Accessories	Cable ties, mounting ear screw, earthing & spiral wrap tubes shall be provided as per requirements.
5.4.5	Materials	Adaptor plate shall be made of Cold Rolled Steel material.
5.4.6	Insertion loss	Insertion loss ≤0.2dB for Zirconia sleeve.
5.5	**Cable Gland**	
5.5.1	Cable Gland	Double compression cable glands (Materials – Brass and Stainless Steel & Suitable for Industrial Grade) of different sizes for cable entry into the RTU, DCU, CRP & Other panels. The gland shall be robust and heavy duty.
5.5.2	Material	Brass as per IS-319 standard. If M.S/S.S IS:304/316)
5.5.3	Non-Armoured cable glands	Double compression cable glands for un-armoured cables providing 2 nos of environmental seal for the outer sheath of cables having universal clamping range, allowing the cable to be easily disconnected from the equipment, for maintenance and changeout, etc.

5.5.4	IS/IEC std	Gland shall comply to IS12943:1990/ IEC 62444, IEC 60529(Weather proof)
5..5.5	Temperature	Armored cable: -60ºC to +100 ºC, Un-Armoured cable: -30ºC to +100 º C.
5.5.6	Ingress protection	IP-67 weather proof glands as per IEC 60529:2001, IP-66 as per IS/IEC 60079 for armoured& un-armoured cables
5.6	**Surge Protection Devices (SPD)**	
5.6.1	Surge Protection Device (SPD) for Power supply	Pluggable on the base ,type 3 surge protection, with status indicator, din-rail mountable, modes of Protection PE,NE,PN., Maximum continuous operating voltage – 65-85 V DC, maximum discharge current 10kA-30kA.response time≤25ns,supports differential and common mode protection, industrial grade.
5.6.2	Surge Protection Device (SPD) for Serial ports	Passive surge protector, Must support RS485 differentail line .modes of Protection +D to GND, -D to GND,low insertion loss, low capacitance,nominal voltage ±12V. maximum discharge current 5kA-10kA,compliant with IEC 61643-21
5.6.3	Surge Protection Device (SPD) for Ethernet ports	Shall support 10/100/1000 Mbps,operating voltage 48VDC, maximum discharge current 10kA-30kA, low insertion loss(≤1dB), industrial grade
5..7	**RS485 to RS232 converter**	
5.7.1	Power supply	Operating power supply ranges min.24 – 60V dc source.
5.7.2	Isolation of signals	Galvanic isolation of 1kV between RS485 & RS232 signals.
5.7.3	Nodes	Should support 32nodes on RS485 side.
5.7.4	Physical wiring	RS485 interface should support both 2 wire & 4 wire signals.
5.7.5	Communication range	Communication speed / data transfer rages shall be user selectable type.
5.7.6	Mounting method	Din Rail Mounting system
5.8	**RJ 45 Connectors (for CAT 6 /6A UTP and STP Cables)**	
5.8.1	Standards	Applicable standards: ANSI/TIA 568 D.2, IEC 60603-7-4, ISO/IEC 11801 class E, EA
5.8.2	Voltage & Current levels	Max. Voltage: 250Volts, Current: 2Amps.
5.8.3	Contact Resistance	Contact Resistance< 20m Ω.

5.8.4	Contact Material	Phosphor bronze with gold plating
5.8.5	Durability	750- 1500 mating cycles
5.8.6	Operating temperature	-40°C to +85°C
5.8.4	IR value	Insulation resistance: 100MΩ.
	Cable Tray	
5.1.4	Type	Perforated, Hot dip Galvanized Iron with cover for laying all types of the cables. Installation of cable trays with accessories or trench as required for the cabling work.
5.1.5	Standard	Shall conform to IEC 61537, ISO 9227
5.1.6	Steel	Cable trays shall be made of single MS sheet
5.1.7	Dimension	Widthx300mm, Depthx75mmx Thicknessx2mm. Coupling plates shall be 3mm thickness.
5.1.8	Connections	Cable tray shall be heavy duty and perforated type with matching fittings like elbows, bends etc and accessories like bolts, nuts, washers, GI strip, hook.
5.1.9	Edge	All tray corners shall be smooth and free from sharp edges.
5.1.10	Certificates	Test certificates shall be submitted during inspection for cable tray materials and Galvanizing coating.
5.2	RTU to Substation devices hardwire connections / communications	Laying and Termination of armoured communication cables (Ethernet, Fiber Optic Patch chords/cards, FO cables, RS 485 cables) ,control cables between Grid Devices (Numerical relays, Transformer monitoring devices/modules, control & Relay panels, Smoke detectors, , NIFPS panel, MFM, Battery Charger, Battery banks to RTU/DCU/Gateway with proper tagging and dressing up to RTU panel.

6.0 TERMINAL BLOCKS

Sl no.	Heading	Function Description
6.1	Rating and Type	Terminal Blocks (TB) of 1100 V grade, continuous current rating of max.35A on the terminals and non-breakable type. Molded piece, stud type screw terminals complete with insulated barriers, melamine housing brass terminals, washers, nuts and lock nuts. Screw clamp, overall insulated, insertion type, channel/rail mounted terminals can be used in place of stud type terminals as per requirements.

6.2	Suitability	Unless otherwise specified, terminal blocks shall be suitable for connecting the following conductors of cable on each side- a. All circuits including current / voltage transformer circuits: 6mm^2 flexible copper. b. AC / DC power supply circuits: one no of 10 mm^2 Al(aluminum)./ 6 mm^2 flexible Cu(copper).
6.3	Marking and covers	White fiber markings strip with clear plastic, slip-on / clip-on terminal covers to be provided andA reflective prints on HIP(High Intensity Prismatic) films which contain lens to reflect at night when light shines with clear plastic, slip-on / clip-on terminal covers to be provided in yellow stickers.
6.4	Disconnecting Facility	To be provided in AC, DC source terminals.
6.5	Shorting & Earthing Facility	To be provided at earthing terminals.
6.6	Terminal Segregation	TBs shall be segregated by application i.e separate terminal blocks shall be provided for each application.
6.7	Vertical clearance with gland plate	Minimum 250mm.
6.8	Clearance between two rows of TBs	Minimum 150mm.
6.9	TB contact materials	The terminal shall be such that maximum contact area is achieved when a cable is terminated. The terminal shall have a locking characteristic to prevent cable from escaping from the terminal clamp unless it is done intentionally. The TB conducting part in contact with cable/wire shall be preferably tinned/silver/nickel/copper/zinc shall be preferred.
6.10	Arrangement	Arrangement of the terminal block assemblies and the wiring channel within the enclosure shall be such that a row of terminal block runs in parallel and close proximity to each side of the wiring duct. The side of the terminal block opposite the wiring duct shall be reserved for the external cable connection.
6.11	Categorization	For ease of external connections, terminal blocks shall be categorized based on their usage i.e all terminals for wiring of particular equipment like circuit breaker should form one terminal block.
6.12	Tightness	The Terminal block wiring shall be tight with respect to its function as per standard Torque limit wherever applicable as per IS/IEC Std and OEM recommended values.
6.13	Spare Terminals	20% in each TB row. The spare terminals shall be provided with lugs mounted on it.

7.0 PAINT

S.No.	Heading	Function Description
7.1	Paint Type	Powder coated. Pure Polyester base grade-A, structure finish.
7.2	Paint Shade	Exterior: RAL 7032 “Siemens Grey”.
7.3	Paint Shade	Interior: RAL 9003“Glossy White”.
7.4	Paint Thickness	Minimum 70 microns.

8.0 NAMEPLATES AND MARKINGS

S.No.	Heading	Function Description
8.1	Nameplates	To be provided as per the following description.
8.2	Equipment Nameplates	a. All equipment mounted on front side as well as equipment mounted inside the panels shall be provided with individual name plates with equipment designation engraved. b. All front mounted equipment shall be also provided at the rear with individual name plates engraved with tag numbers corresponding to the one shown in the panel internal wiring to facilitate easy tracing of the wiring.
8.3	Feeder Nameplates	(a) Large and bold name plate carrying the feeder identification numbers shall be provided for circuit / feeder designation on the top of each panel on front as well as rear side. (b) Rear bottom of each panel shall have a nameplate clearly indicating the following: (i) Purchaser Name (ii) BSES, PO No. & date (iii) Drawing Reference No (iv) Voltage Level, Bay No (v) Panel Serial No (vi) Year of Manufacture (vii) Control Voltage (viii) Customer care No
8.4	Material	Non-rusting metal or 3 ply lamacoid. Nameplates shall be black with white engraving lettering with reflection Or Reflective Stickers are allowed which have a reflective prints on HIP(High Intensity Prismatic) films which contain lens to reflect at night when light shines on them [Suitable text/background colours] with suitable base material fixture.(shall be discussed during engineering stage).
8.5	Fixing	All nameplates/rating plates shall be riveted to the panels at all four corners. Bolting/screwing is not acceptable.

8.6	Markings	Each switch shall bear clear inscription identifying its function. Similar inscription shall also be provided on each device whose function is not otherwise identified. If any switch or device does not bear this inscription separate nameplate giving its function shall be provided for it. Switch shall also have clear inscription for each position.

9.0 EARTHING

Sl no.	Heading	Function Description
9.1	Panel Earthing	All panels shall be equipped with an earth bus securely fixed.
9.2	Location of earthing bus	Earthing bus shall be as per BSES/OEM recommendations.
9.3	Material	The material and the sizes of the bus bar shall be 25 x 6 mm copper flat unless specified otherwise. Bimetallic strips shall be provided in order to connect external earth grids as per site requirements. (if required)
9.4	Earth Bus joints	All bolted joints in the bus should be connection of two bolts.
9.5	Hinged Doors	Earthed through flexible copper braid wires of at least $16mm^2$.
9.6	RTU & Instruments earthing	All metallic cases of relays, instruments and other panel mounted equipment including gland plate, shall be connected to the earth bus by copper wires of size not less than 2.5 mm^2. The color code of earthing wires shall be yellow-green. The earth wire connecting at earth bar with copper bolt & nut. Each panel shall be provided with additional copper bolt & nuts throughout the earth bus bar with space between each bolt & nut. Only two wires permitted for each earth connection at a time.
9.7	Electronics Earth Pit / Earth riser	All RTU, IT, DCU, Cyber security, CCTV, other Electronics products shall be equipped with Electronics Earth pits (min.2 no) separately as per IS standards, Industrial standards of practice.
9.8	RTU Grounding	The Safety ground shall be isolated from the signal ground and shall be connected to the ground network. Safety ground shall be a copper bus bar. The contractor shall connect the panel's safety ground to the grid ground network. Separated (2 Pits) is created for communication equipment and signal ground shall be connected to the communication equipment signal ground. The grid station should be at equipotential.

10.0 RTU PANEL

Sl no.	Heading	Function Description
10.1	**REMOTE TERMINAL UNIT / SCADA / SAS system**	
10.1.1	General	RTU should have been designed and manufactured in accordance with the standards laid down by IEC (international Electro-technical Commission), IEEE, American National Standards Institute ANSI and National Equipment Manufacturers Association (NEMA) for industrial automation systems. Act as a Data Concentrator Unit (DCU) on IEC60870-5-101/104/MODBUS/IEC61850 protocols and support for IEC 50870-5-103, IEC 60870-5-101, IEC 61850 (latest edition), MODBUS TCP IP and RS485 MODBUS RTU protocols & ability to act as a gateway for numerical relays.
10.2	**RTU Processor Module**	
10.2.1	Temperature	RTU processor operating temperature range -25ºC to 75 ºC, RH 5 – 95% non condensing.
10.2.2	Self-diagnosis	RTU shall be able to detect internal failures and same shall be transmitted to SCADA as a soft signal. A watchdog relay with changeover contact shall provide information about the failure for annunciation. Any binary input & output contact failure by internal an event shall be provided as alarm & report to SCADA. The IRF shall not be generated in such cases. Watchdog should be other than BO count. Two watchdog contact shall be provided as per purchaser requirements.
10.2.3	Power fail backup	Li Battery/CMOS Battery or equivalent to back up the data/time in NVRAM in case of power failure.
10.2.4	RTU Processor communication protocol	IEC 61850-1/IEC 61850-9-2LE (latest version) server & client, IEC 61850-9-2/IEC 61869 (latest version) Flexible streams, IEC 60870-5-103(Master), IEC 60870-5-104(Master & Slave), MODBUS RTU Master, MODBUS TCP client, DNP 3.0 Serial/TCP, IEEE C37.94**,** IEEE 802.1X VLAN, LON, SPA, etc.(latest version of IEC Standard, IEEE standard) shall be provided as per site & BSES requirements.
10.2.5	MCC & BCC communication	Main processor (DCU)/RTU should have adequate capacity for data handling / processing and main processor/CPU must have required number of communication ports for simultaneous communication with Master stations (MCC & BCC) / MFTs and RTU configuration & maintenance tool.
10.2.6	IEC-60870-104	RTU need to be installed for interface of substation devices and control centers (Main and Backup) through IEC-60870-104 protocol.
10.2.7	Main processor HOT Redundancy	RTU main processor/Gateway must have HOT Redundancy features for control center communications.

10.2.8	Software License Capacity	The RTU software permanent license shall have the minimum capacity PLC (5000dp), Archive data points to configure min.10,000 data points in SD memory and to configure minimum 150 IED's through IEC 61850 client server protocol.
10.2.9	Multiple User software license	All associated equipment's and supply of accessories including software and operating tool / multiple user licenses for RTU shall be provided as per BSES requirements only.
10.2.10	Capability	Processor with capability of integration of 5000 DP or more
10.2.11	Time sync	RTU shall synchronize primarily with the GPS receiver system available in RTU through PTP & secondarily through time sync messages sent from SCADA MCC through IEC 104.
10.2.12	Capacity for IED handling	RTU processor must have the capacity of integration of minimum 150 IED's over IEC61850-9-2 and above (or Latest Edition) protocol according to substation design and IED's protocol communication standards.
10.2.13	Configuration features	CPU / DCU/ RTU software configuration future (Communicate to multiple master stations (min.05) simultaneously on IEC 60870-5-104.
		RTU / DAU must have multiple location (minimum 5 Location) data transmission facility viz Master Control Center, Backup Control center, etc.
10.2.14	Flash card	Processor with flash card 2GB or more for configuration storage file and SOE buffered events storage (around 1000dp) and archive data storage.
10.2.15	RBAC	Password protection with Role Based Access Control
10.2.16	Configuration port	RTU processor should have software configurable RS485/RS232 ports with configurable baud rates from 300 to 115200 bps.
10.2.17	Data base	Remote data base, downloading of RTU from Master Station / RTU/SCADA Control center.
10.2.18	Auto-Restoration	RTU shall have the capability of automatic start-up and initialization following restoration of power after an outage without the need for manual intervention. All restarts shall be reported to the connected master stations.
10.2.19	Hot & Stand by Redundancy	Hot redundancy is required for Main processor modules, Rack board, PSU and Gateway for MCC & BCC communications. Each main processor must have two Ethernet ports dedicated for communication with RTU/SCADA servers over IEC 60870-104 protocol.
		While First Module will be live, redundant should be hot standby and vice versa.
		Communication switchover between either module in case of failure. Main processor module along with Rack for MCC communication should be separate from the IO cards.
10.2.20	Processor Modules Coating	All modules (Power/Processor/IO/AI/server) must have conformal coating to protect against moisture, dust, chemicals

		and harsh environments. Coatings shall also protect relays against corrosive gases such as H_2S or SO_2other gases for safe & reliable function of Hardware/Firmware/Comm. modules.
10.2.21	RTU size	RTU size will depend on the size of the substation, number of the feeders, number of signals and command outputs along with sufficient spares for future requirements.
10.2.22	Clock resolution	RTU processor module shall have the internal clock with minimum time resolution of 10ms.
10.2.23	Protection devices / IED's	All numerical relays, protection devices for RTU – All modules (all Analog input modules, Digital Input/output modules) and ports (Serial and Ethernet ports) must have in-built or external surge protection devices and optical isolation.
		RTU communicate with numerical relays on IEC 61850 protocol is required; however the options for IEC-60870-103 protocol along with MODBUS protocol option if required for other devices integrations. Numerical relays can be make of Hitachi energy, Siemens, Schneider Electric, GE, ABB, ASHIDA, SEL, etc. make is depending on the type / make of CRP panels, Switchgear panels, RMU, FRTU, etc.
10.2.24	Environmental requirements	RTU CPU and other Data Acquisition modules shall confirm to EMC requirements as per IEC61000-4-2/3/4/5, IEC61000-4-18 for EMI/EMC, ESD and other environment immunities. Test reports and test certificates to be furnished for the same.
10.2.25	Additional I/O cards	Offered RTU system shall be suitable for extension in future for additional bays/IO's. During such requirement all the drawings, configuration shall be designed in such a manner that for extension seamless effort is required.
10.2.26	LED indication	Modules must have LED indications to provide status and diagnostic information.
10.2.27	RTU Module	Each RTU processor module shall be short circuit proof and shall be protected by fast blow glass fuse/MCB's.
10.2.28	I/O module diagnostic	All the I/O module, I/O cards shall have the diagnostic feature for sensing the channel failure, card failure.
10.2.29	Architecture	Hardware and software architecture shall be modular and dis-connectable to adapt to the required level of complexity as per the application.
10.2.30	RTU operation with primary system	The RTU's shall be carefully designed such a way that there will be no operational restrictions for control interlocks & operations of primary system equipment's [SWGR / CB/ ISOLATOR / EARTH SWITCH, etc] of AIS / GIS / SWGR, etc. for its normal operations, including conditions of ON LOAD BUS TRANSFER function of individual feeders.
10.2.31	Processing Indications	SCADA functions in monitoring direction shall be executed on SPI (Single Point Input) and DPI (Double Point Input). DPI shall only be used in case of Isolator and Circuit breaker "close" and "open" indication.

10.2.32	Command Processing	Functionality of command processing offered for SCADA interface shall include the processing of single and double commands i.e SCO (Single Command Output) and DCO (Double object command Output). DCO shall only be used in case of Isolator and Circuit Breaker "close" and "open" command. If any other commands shall be same discussed during engineering stage.
10.2.33	SOE Event & Fault records	i. RTU shall support SOE (sequence of events) feature, data archive feature for reporting and analysis. The achieved data shall be stored in a non-volatile flash memory. ii. RTU shall have the facility of recording of various parameters during event/fault with option to set the duration of record through settable pre fault and post fault time. iii. Sys Log shall be store at RTU & shall be retrievable via front/rear communication as per requirements. (If login & password protection required, the same shall be intimated to customer) iv. Internal battery backup to hold data in SOE buffer memory & also maintaining the time & date. v. If Disturbance records to store file of COMTRADE format from IED as added advantage to fetch data for fault analysis
10.2.34	20% Spare	20% Spare for RTU, DCU – Provision for 20% (Basic IO count + 20% Spare) of the total DI/DO signals (Hard/Soft) as a spare shall be made available for future requirements.
10.2.35	Spare Communication port	In RTU there shall be the provision of 3 to 4 spare ports to accommodate IEC 103/MODBUS protocol connections and spare port 1 each, for IEC 104 and IEC 61850 communication.
10.3	**Power supply module**	
10.3.1	Power supply	24-60V DC power supply module as per purchaser requirement.
10.3.2	Dual power	Hot Standby / Dual PSU & Redundancy in power supply – Possibility to increase the RTU processor availability by having a second power source in case the first one fails. Each processor should be connected with a different power source. If any power source or power supply card fails then other one should keep the switch continuous operation with auto changeover.
10.3.3	Temperature	Operating temperature range -25ºC to 75 ºC, RH 5 – 95% non condensing.
10.3.4	MCB & DC to DC Converter	AC/DC MCBs, DC to DC Converter (In case substation battery voltage level is 220V DC), etc should be provided as per requirements.
10.3.5	Power fails	The RTU cards/DCU/Modules is de-energized/failure/power off, then it should not trip Circuit breaker/SWGR.

10.3.6	Voltage surge	Over/Under voltage protection, short circuit protections for safety of RTU Module, processors, other connected devices.
10.3.7	Alarm signal	Alarm indication in case of failure, tolerant on input voltage interruption for 50ms.
10.4	**DC to DC Converter (Based on Aux.Voltage of substation)**	
10.4.1	Converter	220V to 48V DC to DC converter shall be supplied by vendor in case of substation auxiliary voltage of battery charger is 220V dc.
10.4.2	Input voltage	Input Voltage : min.176 ~ 264 V dc
10.4.3	Output voltage	Output Voltage : min 38 ~ 60 V dc
10.4.4	Output current	Min.20Amps range or As per BSES requirements
10.4.5	Voltage stability	Highly accurate voltage stabilization, low input/output noise.
10.4.6	Isolation	Proper electrical isolation between input & output converter circuitry.
10.4.7	Redundancy	Redundant DC to DC converter shall be provided
10.4.8	Voltage surge	Over/Under voltage protection, short circuit protections for safety of RTU Module, processors, other connected devices.
10.5	**Analog Input Module**	
10.5.1	Measurements	Measurable ranges of ±2mA, ±5mA, ±10mA, ±20mA, ±40mA, 4-20mA, 0-20V, in direct current (DC) values according to BSES requirements & as per site requirements.
10.5.2	Configurable features	Zero value detection, Switch over recognition, Smoothing, threshold value monitoring,
10.5.3	Resolution	A/D Converter Resolution -24 bit
10.5.4	Reporting	The Analog data shall be reported periodically Master Control Station. However shall be reported by exception if the analog value exceeds the previous value by more than 20%.
10.5.5	Electrical isolation	Analog input module with electrical isolation. Analog module input channel shall have a suitable protection and filtering to provide protection against voltage spikes and residual currents.
10.5.6	Frequency	Line Frequency interface suppression should be provided.
10.5.7	Self-diagnostic	Each module shall have the diagnostic feature for sensing channel fault, over ranges of set limit/values, card fails, etc.
10.6	**Binary Input / Digital Input Module**	
10.6.1	Input	Opto coupler based binary inputs shall be provided. Inputs shall be with aux.volt of 48Vdc range.

10.6.2	Polarity reversal IO	Each input shall be protected against polarity reversal of I/O voltage.
10.6.3	Higher priority of reporting	RTU shall support the digital status changes by exception to Master Control Center. Digital status shall have higher priority than analog data.
10.6.4	Self-diagnostic	Modules must have LED indications to provide status and diagnostic information.
10.6.5	Change in digital signal status	Any changes in state from High-Low values or Low – High values of binary/digital status must report to RTU processor & Master control center immediately as per BSES requirements without any time delay.
10.6.6	Integrity check	Binary input status shall be assigned to the scan groups for integrity check by master station after every 10minutes
10.7	**Binary Outputs (BO) / Digital Outputs (DO)**	
10.7.1	Output	Standard Output contacts shall be provided with switching capacity of 60W.
10.7.2	Voltage range	Output voltage in the range of 24~60V dc
10.7.3	Breaking current	Max.2Amps
10.7.4	Contact capability	DO module shall have capability to withstand heavy short circuit breaking current while operations. Contact voltage withstand of both AC, DC voltages according to site requirements.
10.8	Local Remote	RTU shall follow the select and execute sequence for operation of command from Master control center & Local control center based on Local Remote selectable switch.
10.8.1	Self-diagnostic	Modules must have diagnostic feature of channel / group faut, short circuits, card fail, DO contact module signal fail, etc and report to SOE as per BSES requirements.
10.8.2	RTU communication cable power limits	The attenuation and receive power shall be measured and confirmed to be within the specified limits as per OEM recommendations/instruction sheets/manuals for fiber optic cables, FO chords, etc.
10.9	**Surge Protection Devices (SPD)**	
10.9.1	Surge Protection Device (SPD)	Surge Protection Device (SPD) for Main DC Source. All modules (All Analog input Modules, Binary Inputs (BI) / Digital Inputs (DI) Modules, Binary Outputs (BO) / Digital Outputs (DO) Modules in RTU and ports (Serial and Ethernet ports) must have in-built or external surge protection devices and optical isolation.
10.9.2	Transient Voltage Suppression (TVS)	Three stage of SPD485 protection shall be provided for protection against power surges, transients, voltage surges, line noise and disturbances with Transient Voltage Suppression (TVS)
10.10	**RS485 to RS232 converter**	

10.10.1	Power supply	Operating power supply ranges min.24 – 60V dc source.
10.10.2	Isolation of signals	Galvanic isolation of 1kV between RS485 & RS232 signals.
10.10.3	Nodes	Should support 32nodes on RS485 side.
10.10.4	Physical wiring	RS485 interface should support both 2 wire & 4 wire signals.
10.10.5	Communication range	Communication speed / data transfer rages shall be user selectable type.
10.10.6	Mounting method	Din Rail Mounting system
10.11	**General features of RTU panels**	
10.11.1	Data Concentrator Unit (DCU)	Act as a Data Concentrator Unit (DCU) on IEC60870-5-101/104/MODBUS/IEC61850 protocols and support for IEC 50870-5-103, IEC 60870-5-101, IEC 61850 (latest edition), MODBUS TCP IP and RS485 MODBUS RTU protocols & ability to act as a gateway for numerical relays.
10.12	**Annual Maintenance Contract**	
10.12.1	AMC period	AMC period 3 years shall be given along with this proposal.
10.12.2	AMC Start	AMC period shall be started after handing over the system to BSES from handing over date approved by RTU/SCADA dept
10.12.3	AMC Trouble shooting	During AMC period all the issues pertaining to RTU/Gateway/Other devices shall be handled by OEM at site irrespective of number of site visits.
10.13	**RTU After-Sales Service Support**	
10.13.1	RTU performance	The RTU performance certificates (<5 year) must be submitted by vendor as per IS/IEC std during bidding stages.
10.13.2	Warranty	5 year replacement warranty is applicable to OEM's Electronic RTU modules, Gateway units, Network devices, Ethernet switches, etc. If any cards fails / burns due to surges from CT, VT/PT, CVT, via RS485 / Serial, surges through cables, etc then replacement shall be under OEM's scope till warranty period. Suitably designed SPD's shall be incorporated in the circuits as per site requirements to avoid such failures.
10.13.3	Warranty repairs	If any hardware (or) software fails during this period shall be rectified by OEM on site within 48 hours
10.13.4	RTU Life cycle	The RTU shall be chosen in such a way that OEM supplier shall not phase it out/declare EOL for next 10 years in International/India origin manufacturing units.
10.13.5	RTU Rejection	RTU likely to be phased out in next 2 years must not be offered by vendor & if found offered will be rejected at any stage even post award/drawing approval/site execution.
10.13.6	RTU Operation &Maintenance	The vendor shall supply relay such a way that where OEM supply support spare modules of RTU if in case fail, configuration modifications along with updates as per

		firmware/software for 15 years duration after expiry of warranty period.
10.13.7	Warranty & Guarantee	Warranty & Guarantee for 5 years shall start after successful commissioning of RTU/SAS at site.
10.13.8	RTU Warranty	The vendor/supplier RTU panels all products & devices including Electronic modules/cards, GPS, Ethernet switches, HMI, etc). If any cards fail/burns due to surges from CT, PT via RS485/Serial, Surges through cables, earthing, etc, then replacement shall be under OEM's scope till warranty period. Suitably designed SPD's shall be incorporated in the circuits as per the size requirements to avoid such failures. If any material found faulty during warranty period shall be replaced within min.24hrs to max.one weeks time. If purchaser replaced with any cost implication, the same shall be deducted or borne by vendor/supplier.
10.13.9	Warranty sales & service supports	A service to enable any faulty items of protection equipment's to be rectified or replaced within 24 hours by vendor or OEM during warranty periods. Suitable spares and support engineers shall be available to meet this equipment normalization without any additional cost implications & there by charging primary system for its stable operation & monitoring. If purchaser replaced with any cost implication, the same shall be deducted or borne by vendor/supplier.

11.0 MANAGED ETHERNET SWITCH

Sl no	Heading	Function description
11.1	**Ethernet Switch :**	
11.1.1	Quantity	As per the site requirements and approved SAS architecture considering 20% spare ports in each switch.
11.1.2	FO Port (Downlink)	Minimum 24 nos i. FO:20 nos LC,1310nm, multimode, 100 Mbit/s. ii. RJ45:4nos(CAT VI usable) Ethernet port copper, 100 Mbits/s.
11.1.3	FO Port (Uplink)	SFP type : Minimum 2 Nos, 1000 Mbits/s.
11.1.4	RJ 45 Port (Uplink)	SFP type : Minimum 2 Nos, 1000 Mbits/s.
11.1.5	Network Protocol	PRP, HSR compatibility.
11.1.6	Coating	Conformal type.
11.1.7	IP(ingress Protection)	IP40
11.1.8	Power Supply	Dual Modular aux. power supply for 220V /48V dc rating as per site requirements with ±20% voltage tolerance.
11.1.9	ETH Grade	Industrial Layer 2 type.
11.1.10	ETH Module	Ethernet Switch shall be Modular type

11.1.11	Certification	KEMA or Equivalent Labs, CE, FCC & IEC 61850 compliance.
11.1.12	Cyber security	IEC 62443-4-1, IEC62443-4-2, IEC 62351-3 std for cyber security requirements for Industrial OT system.
11.1.13	Operating Temperature	-40ºC to +70ºC.
11.1.14	Storage Temperature	-40ºC to +85ºC.
11.1.15	Relative Humidity	5 to 95% RH non condensing
11.1.16	Placement type	19inch Rack mounting .LED's at front , Port Terminations and Power supply at Rear.
11.1.17	Blinking LED Indicators	On each FO/RJ45 ports.
11.1.18	Maintenance /console Part	Console cable to be supplied along with each Ethernet Switches.
11.1.19	Latency	Less than or equal to 10 ms.
11.1.20	Wavelength	Multimode, 1310 /950/850 nm as per SCADA requirements.
11.1.21	Fiber Optics/ RJ45 comm. Cables/cords	As per scheme requirements.
11.1.22	RJ45 Cable Type	CAT VI.
11.1.23	Associated Connectors and Accessories	All the ports shall be covered with dust protectors. As per customer requirements and shall be verified during engineering stage.
11.1.24	IEC/ IEEE Standard	The Ethernet / Fiber optic switches should be a managed switch and are intended to be installed in the control room and shall be complaint to IEC-61850-3 electrical substation networks and IEEE 1613 standards, IEEE 802.3.
11.1.25	Network topology Redundancy	Shall support support 802.1d STP,802.1w RSTP,802.1s MSTP spanning tree protocols, PRP and HSR . .
11.1.26	Environmental	Switch design should with IP42 std protection class for power substation automation application that operate in extremely harsh environment (High and medium voltage substation environment) and it also withstands vibration, electrical surges, fast transients, electrostatic discharge and extreme temperatures and humidity. Industrial managed Fast Ethernet switch shall be supplied according to
11.1.27	Link Fail	Link Failure / Watchdog contact alarm – programmable link failure / watch dog contact to be provided as solid state relay hardwired contact.
11.1.28	Event logs & alarms	Logs and alarms with Time stamp – statistics about link status alarms are to be stored with the accurate timestamps duly tracing all events.
11.1.29	Ethernet switch access	Security features – The switch shall support different user access levels passwords, including the facility to work with

		different VLANs, following the 802.1Q standard, port security based on MAC address, possibility to disable unused ports, authentication protocols shall be provided. The switch shall have advanced cyber security features to be implemented to avoid unauthorized access to the system such as RADIUS/TACACS+ and VPN gateway support with IP sec & SSH.
11.1.30	Time sync	The switch shall have an internal clock and shall be synchronized from a network SNTP, NTP, PTP server.Also switch must have the features of acting as SNTP server.
11.1.31	License requirements	Tools with License – Diagnostics tool, other necessary tools with a multi user license to be provided along with the switch.
11.1.32	Mounting	Mounting options – Switch should be DIN Rail/19inch rack mountable as per the site requirements with tool kit for mounting to be included.
11.1.33	Port configuration	Local USB / console port for emergency boot / configuration is mandatory.
11.1.34	Network security	Network based distributed security by having a firewall on each port ot the switch for all the standard industrial protocol like IEC-61850 should be available.
11.1.35	Ethernet switch port mirroring	The switch shall have the facility of port mirroring and the user shall configure one port to replicate traffic flows of different ports, so the system administrator can monitor the incoming, outgoing or all kinds of traffic that is going through the ports under study.
11.1.36	Fail detection	ITU-T G.8032 support for Ethernet Ring redundancy, ensuring fast failure detection is preferred.
11.1.37	Environmental specifications	They switches shall sustain the stringent levels in temperature range and electromagnetic immunity defined in the 61850-3 but also the advanced functional requirements defined for operation with other IEC-61850 devices. The switch should be certified on IEC-61850, functional & Environmental specifications by KEMA.

12.0 INTERPOSING RELAY / CONTRACTORS /AUXILIARY RELAY

12.1.1	Coil voltage	48 DC ±10% tolerance.
12.1.2	Power consumption	.typically 1.2 to 6W
12.1.3	Utilization category	DC-13
12.1.4	Operating time	20-50ms
12.1.5	Operating Temperature	-25ºC to +60ºC
12.1.6	Relative humidity	Maximum 95% non condensing

12.1.7	Interposing relay	Contactors / interposing relays (48Vdc, 10A) to be provided and wired for each DO channel. Free wheeling diode is to be provided in each contractor to suppress inductive transients during energizing/de-energizing of contactor coils.
12.1.8	Contact Requirement	2NO + 2 NC with Add on block contacts
12.1.9	Contact Material	Silver-cadmium
12.1.10	Contact Rating	10 A at 50/220VDC
12.1.11	Electrical endurance	.>100000 mechanical operations
12.1.12	Mounting	DIN rail
12.1.13	IP rating	IP20
12.1.14	Insulation voltage	690V
12.1.15	Impluse withstand voltage	Uimp: 6-8 kV
12.1.16	Standards & compliances	IEC 60947-4-1 compliant, CE, UL approved
12.2	**Voltage Monitor Relay (VMR)**	
12.2.1	Aux.Volt& Measurement inputs	Aux.Voltage: 24 ~ 240V dc, UV, OV Measuring input: 0 -600V AC/DC, 1 C/O, RS485/RTU, LED Display
12.2.2	Voltage Monitor Relay (VMR)	DC (+Ve) or (-Ve) voltage shall be monitored for each RTU panel DC distribution ckts and report in case of UV/OV values exceeds set limits by digital inputs (DI) or analog inputs (4-20mA)
12.2.3	Alarm	Whenever set limits exceed values an alarm shall report to Master control center.
12.2.4	Reporting signal	The relay shall be provided with 2NO, 2NC along with RS485 communication for reporting to RTU modules (Analog/Digital).
12.3	**DC Earth Leakage Relay (ELR)**	
12.3.1	Aux.Volt& Measurement inputs	Aux.Voltage: 20 ~ 230V AC/DC, UV, OV Measuring input: 48Vdc, 110Vdc, 220Vdc Contacts: 2NO+2NC, Flush current set: 5~40mA, Time : 1~15sec.
12.3.2	Earth Leakage Relay (ELR)	The ELR leakage current range of upto ≥50mA. (min. Earth leakage 5mA~50mA) and report in case of Earth leakage current exceeds set limits. The DC leakage tested by +Ve or –Ve to Earth with set time limit of operation for alarm/trip as per requirements.
12.3.3	Alarm	Whenever set limits exceed values an alarm shall report to Master control center.

13.0 CONTROL RELAY PANEL (CRP)

Sl no	Heading	Function description
13.1	**RTU Hardwired signal interfacing**	
13.1.1	Status Signals	Potential free NO/NC contacts for status signals as per standard signal list (refer annexure A) required to be terminated on dedicated terminal block for RTU interfacing in C&R panels.The terminal block set to be renamed as X:RTU:DI
13.1.2	Command signals	Remote control interlocking contact termination shall be provided with the terminal block group name X:RTU:DO
13.1.3	Analog signals	Analag signal termination(4-20mA DC current) shall be provided for WTI, OTI, tap position signals with the terminal block group name X:RTU:AI
13.2	**Numerical Relays**	
13.2.1	Communication numerical relays	The numerical relays/IED's such as Main Protection and back up protection relays, Bay Control Protection Unit relay (BCPU) , TMU etc must have dual redundancy communication ports (Ethernet Ports TCP/IP: Fiber Optic/Copper ports) with Parallel Redundancy Protocol (PRP) , HSR, RSTP as per approved system SAS architecture.
13.2.2	Dual Ethernet Port	2xLC type duplex / 2xRJ45 ETH supporting PRP, HSR,RSTP, Dual IP etc as per the approved SAS system Architecture Communication port:
13.2.3	Data Transfer rates	The Fiber port/Copper Ethernet ports connections shall be 1310nm with single mode/multi-mode 100Base Fx – High speed data rates with multiple masters "Clients" capability.
13.2.4	Time synchronization	PTP IEEE 1588, SNTP/NTP
13.2.5	Date Model	IEC 61850-9-2 (latest Edition) and above as per BSES requirements.
13.2.6	File Transfer	The Numerical relay disturbance records must be downloadable from RTU through secure file transfer feature of IEC 61850 /IEC 103 etc
13.2.7	Communication data set	Relays shall communicate all parameters as per the standard signal list through IEC 6185-0 client server communication (refer annexure A for signal list).However this list is indicative only and number of signals should not be limited to this. Additional signals should be taken during review of actual drawings through and shall support simultaneous multiple client configuration.
13.2.8	Indications	The Following indications data format should be configured as a DPS(Double Point Status) in relays. 1. All Feeders Circuit Breaker ON & OFF 2. All Feeders Disconnector/Isolators 89A, 89B, 89L, 89T, 89PTA, 89PTB, etc ON & OFF.

		3. All Feeder Earth Switches 89AE, 89BE, 89AE1, 89BE1, 89TE, 89LE, etc. ON & OFF.
13.2.9	Commands	The Following command data format should be configured as a DPS(Double Point Status) in relays. 1. All Feeders Circuit Breaker OPEN & CLOSE commands. 2. All Feeders Disconnector/Isolators 89A, 89B, 89L, 89T, 89PTA, 89PTB, etc OPEN & CLOSE commands. 3. All Transformer OLTC – Tap changer TAP RISER, Tap LOWER commands. 4. Announciation Alarm Accept, Reset commands. All Feeder Earth Switches 89AE, 89BE, 89AE1, 89BE1, 89TE, 89LE, etc. OPEN & CLOSE Commands (if required).
13.1	GPS Signal	The RTU must have the capability of time synchronization with a GPS receiver and the GPS at the control room will be used for this time synchronization purpose
13.3	**MFM (Multifunctional Meter)**	
13.3.1	Power measurements	To extend the current / voltage / active and reactive power / power factor, etc to RTU, MFM to be installed in CRP/SWGR panels individually for each feeder/ breaker and should be integrated with RTU. Ref Annexure A – SCADA Signal list for MFM measurement signal list.
13.3.2	Auxiliary Supply	50V DC/220V DC (with ±20% tolerance)as per Site requirements
13.3.3	Sampling rate	minimum 32 samples /cycle
13.3.4	Rated Voltage	110V(L-L)/63.5V(L-N).
13.3.5	Rated current	1A & 5 A Programmable
13.3.6	Mounting type	Flush mounting
13.3.7	Overload Withstand	voltage 1.5 times the rated voltage for 10 sec and current 10 times the rated current for 1 sec.
13.3.8	Quadrant of Operation	True four Quadrant operation
13.3.9	Demand Parameters	Present, last , Predicted Peak (Maximum) demand with configurable demand integration period
13.3.10	BI/BO's	Configurable relay outputs: 2 no's
13.3.11	Environmental Characteristics	Operating temperature upto 60°C and 95% RH non condensing
13.3.12	Accuracy class	0.2S
13.3.13	Communication Protocol	Modbus RTU

13.3.14	Communication Interface	2 Wire RS485 with 2.5KV RMS insulation
13.3.15	Surge protection for aux power supply	Shall have reverse polarity protection, voltage surge /spike protection.(inbuilt/externally provided).
13.3.16	Standards/Compliance	IEC 62053-22, IS14697, IEC60529, .EMI/EMC,IEC 61326, IEC 61010
13.3.17	Programming interface	Digital LED Display with programming keys and Configurable Password protection

14.0 GLOBAL POSITIONING SYSTEM (GPS)

Sl no	Heading	Function description
14.1	GPS Signal	The RTU must have the capability of time synchronization with a GPS receiver and the GPS at the control room will be used for this time synchronization purpose
14.2	GPS Signal backup	In case of failure of the GPS receiver, the RTUs time synchronization should be through the MASTER SCADA Clock.
14.3	GPS Setup	The RTU must have inbuilt or external GPS with antenna & internal real time clock to synchronize the IEDs connected to it over their respective protocol.
14.4	Redundant Port	GPS must have dual redundant LAN port for time synchronization.
14.5	Time synchronization	All RTU shall be capable of being synchronized with the system clock through Grid GPS Clock, Master Clock, PC/Laptop, SNTP, IRIG-B, PTPand secondarily through time synchronization messages sent from SCADA MCC through IEC104 protocol as per BSES requirements.
14.6	Approved Make	MASSIBUS / SANDS

15.0 RTU PANEL ACCESSORIES

Sl no	Heading	Function description
15.1	Space heaters	Thermostat controlled with switch for Isolation & Ind.lamp. Space heaters shall be covered with mesh for safety purpose.
15.2	Voltage	240 V AC.
15.3	Wattage	To be provided by Vendor.
15.4	Thermostat Range / Hygrostat Range	To be provided by Vendor.
15.5	Provided with Individual fuse unit	To be provided by Vendor.

15.6	Power Socket and switch	240V, 5/15A universal type socket to be provided in each panel with on-off switch.
15.7	MCBs and Fuses	Each main power distribution point such as Rack/Chassis power supply should be protected by MCB of suitable rating. Subsequently current distribution point should be protected by fuse. Fuse Terminal block should be with LED Indicator.
15.8	Panel illumination	240V AC illumination lamp 15~20Watts controlled by panel door switch to be provided in each panel.
15.9	Local /remote Switch	RTU shall have a Local / Remote selectable switch, 2 C/O Contacts to disable the remote command operation during maintenance. Status of the local remote switch shall be wired to RTU digital input channel for reporting to Master control center.
15.10	Antistatic foot Mat	Durable, Wear and tear resistant , Antistatic foot mat of dimensions shall be provided.

16.0 APPROVED MAKES OF COMPONENTS

Sl no	Heading	Function description
16.1	**RTU Processor – Makes as follows:**	
16.1.1	**HITACHI**	RTU 560 with CMR02 processor series with latest firmware/software and above
16.1.2	**SIEMENS**	SICAM A8000 : CP8050 processor with latest firmware/software and above
16.1.3	**SCHNEIDER**	SAITEL : T500 series with latest firmware/software and above
16.2	**Ethernet switches – Makes as follows:**	
16.2.1	SIEMENS	RUGGEDCOM
16.2.2	HIRSCHMANN	HIRSCHMANN
16.2.3	MOXA	MOXA 7528
16.3	Auxiliary relay	ABB/ Omron/Siemens/Schneider / Hitachi Energy
16.4	Multi Function Meter	Rishabh (3440), Schneider(EM 6400 NG plus)
16.5	LIU	Preston
16.6	MCBs	Siemens/Schneider/Legrand/ABB.
16.7	Control switches	Switron/Kaycee
16.8	Terminal blocks	Elmex/Connectwell/phoenix contact
16.9	RTU/ETH Panel Wiring	Polycab/KEI/Finolex/Havells
16.10	Lugs	Dowells/Jaison

16.11	CFL	Bajaj / Phillips / Havells
16.12	DC Voltage Monitor	/Rishabh/Phoenix/ Voltech.
16.13	DC Earth leakage Monitor (ELM)	Voltech/Phoenix.
16.14	Other devices	if any missed out device needs to meet site requirements must be as per BSES recommendations only.

17.0 DEVIATIONS

Deviation from this specification shall be stated in writing with the tender by reference to the specification clause/ GTP/ Drawing and description of alternative offer. In absence of such a statement, it shall be assumed by the buyer that the seller complies fully with this specification.

18.0 DRAWINGS AND DATA SUBMISSION MATRIX

- Document checklist for each stage is given in table below. (Refer equipment specification for details)
- Document check sheet compliance shall be the first sheet for each submission stage i.e. Technical bid, Drawing Approval, Pre Dispatch, Pre closure.
- No submission is acceptable without check list compliance.
- Deficient/ improper document/ drawing submission shall be liable for rejection.
- Order of documents shall be strictly as per the check list with in Soft copy with separate folder in proper nomenclature.
- Any drawing not included in the below table but necessary for detailed engineering shall be deemed to be included in bidder's scope.

Sl.no	Head	Bid	Drawing Approval	Pre Dispatch	Pre Closure
18.1	Contact Person Name, Email ID and Mobile Number	Required			
18.2	Consolidated Deviation Sheet	Required	Required		
18.3	GTP	Required	Required		
18.4	Type Test as per IS/IEC	Required			
18.5	Manufacturer's quality assurance plan and certification for quality standards		Required		
18.6	Sizing Calculation of Associated Equipment		Required		
18.7	Recommended Spares Apart from spares stated in Spec(for 10 years of operation)		Required		
18.8	RTU Drawings		Required		
18.9	Panel wise BOQ		Required		
18.10	Index Sheet		Required		

Sl.no	Head	Bid	Drawing Approval	Pre Dispatch	Pre Closure
18.11	Symbols		Required		
18.12	System Architecture	Required	Required		
18.13	AC Distribution Circuit		Required		
18.14	DC Distribution Circuit		Required		
18.15	RTU BI circuits		Required		
18.16	RTU BO circuit		Required		
18.17	Communication Architecture		Required		
18.18	All Relay SCADA Communication Diagram with FO patch chord lengths		Required		
18.19	Station Signal list		Required		
18.20	Interpanel wiring circuits		Required		
18.21	TB Reference page		Required		
18.22	RTU/SCADA/LCC circuits		Required		
18.23	QAP		Required		
18.24	Inspection Reports			Required	
18.25	As manufacturing Drawings A3 size Hard copy with each panel			Required	
18.26	Operation and Maintenance Manual			Required	Required
18.27	Trouble shooting manual			Required	Required
18.28	As built Drawings A3 size Hard copy with each panel after commissioning				Required
18.29	Test Report				Required
18.30	Soft Copy				
18.31	In Pen drive/mail/CD/DVD	Required	Required	Required	Required
18.32	Annexure				
18.32.1	Annexure – A	SCADA SIGNAL LIST			
18.32.2	Annexure – B	BILL OF MATERIALS			
18.32.3	Annexure – C	SPARES REQUIREMENT			
18.32.4	Annexure – D	COMMUNICATION ARCHITECTURE			
18.32.5	Annexure – E	SCADA ADAPTATION & INTEGRATION SERVICE			

19.0 QUALITY ASSURANCE, INSPECTION &TESTING

Sl no	Heading	Function description
19.1	Vendor quality plan	To be submitted for purchaser approval.
19.2	Type tests	Product must be type tested as per Indian Standards or IEC. Vendor shall be submitting & get approval from BSES team for inspection relevant documents.
19.3	Type test report validity	Last five years from the date of bid submission.

19.4	Acceptance and Routine tests	The documents furnished for details of method of inspection, checking & acceptance standards and results shall be approved by Inspection team of BSES. Any hold points raised, then the supplier shall comply with the remarks made by BSES representative on such reviews with regards to further testing, rectification or rejection, etc.
19.5	Notice to Purchaser for conducting tests	Five weeks in advance.
19.6	Inspection	The supplier to proceed with the work past a hold point only after clearance by purchaser (if any) or a witness waiver letter from BSES.
19.7	Inspection visit	Successful bidder has to bear all factory inspection/testing expenses of Engineer (3 nos) including To&Fro Flight travels, foods, accommodation, lodging & boarding – Minimum 4 Star rated Logde/Hotel (As per Govt.approved list).
19.8	Test reports of acceptance and routine test before dispatch	i. Final As Built Drawings(ABD) of each panel. ii. Acceptance & Routine Test reports iii. Quality & Type Test reports iv. Manuals of each device. v. Inspection reports & FAT reports. vi. Numerical relays cortec codes. vii. Sizing calculation of associated equipments. viii. Compliance sheets of each scheme drawing. ix. Material Dispatch clearance certificate (MDCC)
19.9	Deliverable	Hard Copies: ➢ 2 sets : A3 size – Approved Drawing of each panel Protection Dept. ➢ 2sets :A3 size –As Manufactured Drawings(AMD) after approveddrawing of each panel for site execution including inspection comments & correction updated shall be dispatch along with panel. ➢ Final Site review & comments after Site commissioning RedMarkupDrawing(RMD) which shall be corrected on supplied drawings by Vendor. ➢ 4sets :A3 size – Final AsBuiltDrawing(ABD) with AsBuiltStamp on dwg – For Projects, Protection Dept, O&M Dept, SCADA Dept,.(After commissioning) ➢ 1sets :A4 size – RTU/ETH-SW Maintenance Manual, Numerical relays each type/model,Aux.relays, Ethernet switches, Meters, Metrosil, Calculation of sizing of various equipments, DC/AC sizing calculations,etc& other devices fixed in panels as per IS/IEC std.

		Soft Copies: ➢ 2 CD/DVD copy: Final AsBuilt Drawings (ABD) including Autocad/Enggcad files, pdf files. Maintenance manuals in .pdf files. (bidder shall discuss with BSES for actual format of submission of documents). ➢ Numerical relays original software's (latest version)

20.0 PACKING

Sl no	Heading	Function description
20.1	Packing Protection	Against corrosion, dampness, heavy rains, breakage and vibration. During transportation/ transit and storage, panels may be subjected to outdoor conditions. Hence, packing of each panel shall be weather proof. Anti-static bags or foam shall be used for electronic modules such as RTU Modules, Ethernet switches. Cables, Batteries and other accessories shall be packed separately. Silica gel bags shall be kept inside the packaging to prevent damage to sensitive components due to humidity ingress during transport and storage
20.2	Packing for accessories and spares	Robust wooden non returnable packing case with all the above protection & identification Label. Anti-static bags or foam shall be used for electronic modules such as RTU Modules, Ethernet switches.
20.3	Packing Identification Label to be provided on each packing case with the following details.	
20.4	Purchaser's name.	
20.5	PO number (along with SAP item code, if any) & date.	
20.6	Equipment Tag no. (if any)	
20.7	Destination.	
20.8	Project Details.	
20.9	Panel serial number ,Equipment Identification No, Panel Drawing details	
20.10	Manufacturer / Supplier's name.	

20.11	Address of Manufacturer / Supplier / it's agent.
20.12	Description and Quantity.
20.13	Country of origin.
20.14	Month & year of Manufacturing.
20.15	Case measurements.
20.16	Gross and net weights in kilograms.
20.17	All necessary slinging and stacking instructions.
20.18	Any component found damaged during transportation shall be immediately returned to the manufacturer's facility. The Arrangement for the same shall be made by the bidder

21.0 SHIPPING

Sl no	Heading	Function description
21.1	**Shipping**	The bidder shall ascertain at an early date and definitely before the commencement of manufacture, any transport limitations such as weights, dimensions, road culverts, Overhead lines, free access etc. from the Manufacturing plant to the project site. Bidder shall furnish the confirmation that the proposed packages can be safely transported, as normal or oversize packages, up to the site. Any modifications required in the infrastructure and cost thereof in this connection shall be brought to the notice of the Purchaser.
		On completion of manufacturing the items can be dispatched only after issue of shipping release by the purchaser.
		The seller shall be responsible for all transit damages due to improper packing.

22.0 HANDLING AND STORAGE

Sl no	Heading	Function description
22.1	Handling and Storage	Manufacturer instruction shall be followed. Detail handling & storage instruction sheet / manual needs to be furnished before commencement of supply.

23.0 ABBREVATIONS

Sl No.	Name	Description
23.1	AC	Alternating Current
23.2	DC	Direct Current
23.3	CT	Current Transformer
23.4	VT or PT	Voltage Transformer or Potential Transformer
23.5	SLD	Single Line Diagram
23.6	ICT	Interposing Current Transformer
23.7	CRP	Control & Relay Panel
23.8	BC	Bus Coupler
23.9	Cap.Bank	Capacitor Bank
23.10	LCC	Local Control Cubicle
23.11	RTU	Remote Terminal Unit
23.12	SCADA	Supervisory Control And Data Acquisition
23.13	AIS	Air Insulated Substation
23.14	GIS	Gas Insulated Substation
23.15	SWGR	Switch gear
23.16	OLTC	On Load Tap Changer
23.17	IED	Intelligent Electronic Device
23.18	HMI	Human Machine Interface
23.19	LCD	Liquid Crystal Display
23.20	LED	Light Emitting Diode
23.21	CB	Circuit Breaker
23.22	TNC	Trip Neutral Close
23.23	ES	Earth Switch
23.24	MCB	Miniature Circuit Breaker
23.25	PT100	Platinum Temperature resistance sensor “100” denotes its nominal resistance at “0ºC”.
23.26	PC	Personal Computer
23.27	DM	Derive Mechanism
23.28	Sync	Synchronization
23.29	LBB/BFR	Local Breaker Backup or Breaker Failure
23.30	UF	Under Frequency
23.31	OF	Over Frequency
23.32	df/dt	Rate of Change of Frequency
23.33	OV	Over Voltage
23.34	UV	Under Voltage
23.35	VT Fail	Voltage Transformer Fail

23.36	VMR	Voltage Monitoring Relay
23.37	Sync	Synchronization function
23.38	PSB	Power Swing Block
23.39	AVR	Automatic Voltage Regulator
23.40	TMU	Transformer Monitoring Unit
23.41	MCB	Miniature Circuit Breaker
23.42	ELR	Earth Leakage Relay
23.43	AI	Analog Input
23.44	BI	Binary Input
23.45	BO	Binary Output
23.46	GPS	Global Positioning System
23.47	IRIG – B	Inter Range Instrumentation Group – B
23.48	USB	Universal Serial Bus
23.49	CAT-VI	Category – 6 [Standardized Twisted Pair cable]
23.50	RS485	Recommended Standard - 485
23.51	PLC	Programmable Logic Controller
23.52	FRTU	Feeder Remote Terminal Unit
23.53	OFC/FOC	Optical Fiber cable / Fiber Optic Cable
23.54	FO	Fiber Optic
23.55	RJ	Registered Jack
23.56	LC	Lucent Connector
23.57	SC	Standard Connector
23.58	SFP	Small Form-factor Pluggable
23.59	RSTP	Rapid Spanning Tree Protocol
23.60	HSR	High-availability Seamless Redundancy
23.61	PRP	Parallel Redundancy Protocol
23.62	STP	Shielded Twisted Pair
23.63	FTP	Foil Twisted Pair
23.64	NO	Normally Open
23.65	NC	Normally Close
23.66	L/R	Local / Remote
23.67	QAP	Quality Assurance Plan
23.68	GTP	General Technical Particular

24.0 ANNEXURE – A, B, C, D, E

Note: (Annex. B details shall be provided by vendor for approval)

ANNEXURE- A – SCADA SIGNAL LIST

2. SIGNAL LIST FOR 11KV OUTGOING SWITCH GEARS

S.No.	Signal Name	Short name	Data Type	States		Alarm /event	SOURCE	Protocol
1	CB Status	CB_ST	Double point Status	OFF	ON	EVENT	PROT_IED	IEC 61850
2	SPRING CHARGED	SPCHG	Single Point Status	DISCHARGED	CHARGED	EVENT	PROT_IED	IEC 61850
3	Trip circuit Supervision	TCS	Single Point Status	UNHEALTHY	HEALTHY	Alarm & EVENT	PROT_IED	IEC 61850
4	Close Permissive	CLOSE_PERM	Single Point Status	OK	NOT_OK	Alarm & EVENT	PROT_IED	IEC 61850
5	CB in Service	CB_SER	Single Point Status	OUT	IN	EVENT	PROT_IED	IEC 61850
6	Master trip relay oprtd	86_OPRTD	Single Point Status	RESET	OPERATED	Alarm & EVENT	PROT_IED	IEC 61850
7	Panel DC _STATUS	DCF	Single Point Status	UNHEALTHY	HEALTHY	Alarm & EVENT	CRP_Hardwired_RTU	IEC 61850
8	Panel AC_STATUS	ACF	Single Point Status	UNHEALTHY	HEALTHY	EVENT	PROT_IED	IEC 61850
9	L/R _POSITION	SCADENB	Single Point Status	LOCAL	SCADA	EVENT	PROT_IED	IEC 61850
10	Relay internal Failure	IRF	Single Point Status	UNHEALTHY	HEALTHY	Alarm & EVENT	CRP_Hardwired_RTU	IEC 61850
11	ANY_START	FPI	Single Point Status	NORMAL	OPERATED	Alarm & EVENT	PROT_IED	IEC 61849
12	Over current Stage 1 (IDMT)	OC_STAGE_1	Single Point Status	NORMAL	OPERATED	Alarm & EVENT	PROT_IED	IEC 61850
13	Over Current Stage 2(DMT)	OC_STAGE_2	Single Point Status	NORMAL	OPERATED	Alarm & EVENT	PROT_IED	IEC 61850
14	Earth Fault Stage 1 (IDMT)	EF_STAGE_1	Single Point Status	NORMAL	OPERATED	Alarm & EVENT	PROT_IED	IEC 61850
15	Earth Fault Stage2 (DMT)	EF_STAGE_2	Single Point Status	NORMAL	OPERATED	Alarm & EVENT	PROT_IED	IEC 61850
16	CB Command	CB_CMD	Double Point Control (SBO WITH ENHANCE SECURITY)	OPEN_CMD	CLOSE_CMD		PROT_IED	IEC 61850
17	Master trip relay_Reset	86_RST	Single Point Control (DIRECT WITH NORMAL SECURITY)	RESET_CMD			PROT_IED	IEC 61850
18	R_PH FAULT CURRENT		Measured Floating Input				PROT_IED	IEC 61850
19	Y_PH FAULT CURRENT		Measured Floating Input				PROT_IED	IEC 61850
20	B_PH FAULT CURRENT		Measured Floating Input				PROT_IED	IEC 61850
21	NEUTRAL FAULT CURRENT		Measured Floating Input				PROT_IED	IEC 61850
22	R_PH CURRENT		Short Measured Floating Point				MFM	MODBUS_RTU
23	Y_PH CURRENT		Short Measured Floating Point				MFM	MODBUS_RTU
24	B_PH CURRENT		Short Measured Floating Point				MFM	MODBUS_RTU
25	R_Y PH VOLT		Short Measured Floating Point				MFM	MODBUS_RTU
26	Y_B PH VOLT		Short Measured Floating Point				MFM	MODBUS_RTU
27	B_R PH VOLT		Short Measured Floating Point				MFM	MODBUS_RTU
28	ACTIVE POWER		Short Measured Floating Point				MFM	MODBUS_RTU
29	REACTIVE POWER		Short Measured Floating Point				MFM	MODBUS_RTU
30	APPARENT POWER		Short Measured Floating Point				MFM	MODBUS_RTU
31	POWER FACTOR		Short Measured Floating Point				MFM	MODBUS_RTU
32	MAXIMUM DEMAND		Short Measured Floating Point				MFM	MODBUS_RTU
33	NEUTRAL CURRENT		Short Measured Floating Point				MFM	MODBUS_RTU
34	% THD VOLTAGE		Short Measured Floating Point				MFM	MODBUS_RTU
35	% THD CURRENT		Short Measured Floating Point				MFM	MODBUS_RTU
36	PHASE ANGLE R_PH		Short Measured Floating Point				MFM	MODBUS_RTU
37	PHASE ANGLE Y_PH		Short Measured Floating Point				MFM	MODBUS_RTU
38	PHASE ANGLE B_PH		Short Measured Floating Point				MFM	MODBUS_RTU

SIGNAL LIST FOR 11KV INCOMER SWITCH GEARS PANELS

S.No.	Signal Name	Short name	Data Type	States		Alarm /event	SOURCE	Protocol
1	CB Status	CB_ST	Double point Status	OFF	ON	EVENT	PROT_IED	IEC 61850
2	SPRING CHARGED	SPCHG	Single Point Status	DISCHARGED	CHARGED	EVENT	PROT_IED	IEC 61850
3	Trip circuit Supervision_1	TCS	Single Point Status	UNHEALTHY	HEALTHY	Alarm & EVENT	PROT_IED	IEC 61850
4	Trip circuit Supervision_2	TCS	Single Point Status	UNHEALTHY	HEALTHY	Alarm & EVENT	PROT_IED	IEC 61850
5	CLOSE PERMISSIVE	CLS_PER	Single Point Status	NOT_OK	OK	Alarm & EVENT	PROT_IED	IEC 61850
6	CB in Service	CB_SER	Single Point Status	OUT	IN	EVENT	PROT_IED	IEC 61850
7	Master trip relay oprtd	86_	Single Point Status	RESET	OPERATED	Alarm & EVENT	PROT_IED	IEC 61850
8	Panel DC	DCF	Single Point Status	UNHEALTHY	HEALTHY	Alarm & EVENT	CRP_Hardwired_RTU	IEC 61850
9	Panel AC	ACF	Single Point Status	UNHEALTHY	HEALTHY	EVENT	PROT_IED	IEC 61850
10	VT FUSE		Single Point Status	HEALTHY	BLOWN	Alarm & EVENT	PROT_IED	IEC 61850
11	SYNCH _STATUS		Single Point Status	NOT_OK	OK	Alarm & EVENT	PROT_IED	IEC 61850
12	PT MCB_TRIP METERING		Single Point Status	NORMAL	TRIP	Alarm & EVENT	PROT_IED	IEC 61850
13	PT MCB_TRIP PROTECTION		Single Point Status	NORMAL	TRIP	Alarm & EVENT	PROT_IED	IEC 61850
14	OVER VOLTAGE _PROTECTION_OPRTD		Single Point Status	NORMAL	OPERATED	Alarm & EVENT	PROT_IED	IEC 61850
15	UNDER VOLTAGE _PROTECTION_OPRTD		Single Point Status	NORMAL	OPERATED	Alarm & EVENT	PROT_IED	IEC 61850
16	REF_PROT_OPRTD		Single Point Status	NORMAL	OPERATED	Alarm & EVENT	PROT_IED	IEC 61850
17	L/R _POSITION	SCADENB	Single Point Status	LOCAL	SCADA	EVENT	PROT_IED	IEC 61850
18	Relay internal Failure Relay 1	IRF RL1	Single Point Status	UNHEALTHY	HEALTHY	Alarm & EVENT	CRP_Hardwired_RTU	IEC 61850
19	Relay internal Failure Relay 2	IRF RL2	Single Point Status	UNHEALTHY	HEALTHY	Alarm & EVENT	CRP_Hardwired_RTU	IEC 61850
20	ANY_START	FPI	Single Point Status	NORMAL	OPERATED	Alarm & EVENT	PROT_IED	IEC 61850
21	Over current Stage 1 (IDMT)	OC_STAGE_1	Single Point Status	NORMAL	OPERATED	Alarm & EVENT	PROT_IED	IEC 61850
22	Over Current Stage 2(DMT)	OC_STAGE_2	Single Point Status	NORMAL	OPERATED	Alarm & EVENT	PROT_IED	IEC 61850
23	Earth Fault Stage 1 (IDMT)	EF_STAGE_1	Single Point Status	NORMAL	OPERATED	Alarm & EVENT	PROT_IED	IEC 61850
24	Earth Fault Stage2 (DMT)	EF_STAGE_2	Single Point Status	NORMAL	OPERATED	Alarm & EVENT	PROT_IED	IEC 61850
25	CB Command	CB_CMD	Double Point Control (SBO WITH ENHANCE SECURITY)	OPEN_CMD	CLOSE_CMD		PROT_IED	IEC 61850
26	Master trip relay_Reset	86_RST	Single Point Control (DIRECT WITH NORMAL SECURITY)	RESET_CMD			PROT_IED	IEC 61850
27	R_PH FAULT CURRENT		Measured Floating Input				PROT_IED	IEC 61850
28	Y_PH FAULT CURRENT		Measured Floating Input				PROT_IED	IEC 61850
29	B_PH FAULT CURRENT		Measured Floating Input				PROT_IED	IEC 61850
30	NEUTRAL FAULT CURRENT		Measured Floating Input				PROT_IED	IEC 61850
31	R_PH CURRENT		Short Measured Floating Point	AMPS			MFM	MODBUS_RTU

32	Y_PH CURRENT		Short Measured Floating Point	AMPS			MFM	MODBUS_RTU
33	B_PH CURRENT		Short Measured Floating Point	AMPS			MFM	MODBUS_RTU
34	R_Y PH VOLT		Short Measured Floating Point	VOLTS			MFM	MODBUS_RTU
35	Y_B PH VOLT		Short Measured Floating Point	VOLTS			MFM	MODBUS_RTU
36	B_R PH VOLT		Short Measured Floating Point	VOLTS			MFM	MODBUS_RTU
37	ACTIVE POWER		Short Measured Floating Point	W			MFM	MODBUS_RTU
38	REACTIVE POWER		Short Measured Floating Point	VAR			MFM	MODBUS_RTU
39	APPARENT POWER		Short Measured Floating Point	VA			MFM	MODBUS_RTU
40	POWER FACTOR		Short Measured Floating Point				MFM	MODBUS_RTU
41	MAXIMUM DEMAND		Short Measured Floating Point	WATTS			MFM	MODBUS_RTU
42	NEUTRAL CURRENT		Short Measured Floating Point	AMPS			MFM	MODBUS_RTU
43	% THD VOLTAGE		Short Measured Floating Point	%			MFM	MODBUS_RTU
44	% THD CURRENT		Short Measured Floating Point	%			MFM	MODBUS_RTU
45	ACTIVE ENERGY_EXPORT		Short Measured Floating Point	MWH			MFM	MODBUS_RTU
46	ACTIVE ENERGY_IMPORT		Short Measured Floating Point	MWH			MFM	MODBUS_RTU
47	REACTIVE ENERGY_EXPORT		Short Measured Floating Point	MVARH			MFM	MODBUS_RTU
48	REACTIVE ENERGY_IMPORT		Short Measured Floating Point	MVARH			MFM	MODBUS_RTU
49	APPARENT ENERGY		Short Measured Floating Point	VAH			MFM	MODBUS_RTU
50	PHASE ANGLE R_Y		Short Measured Floating Point	DEGREES			MFM	MODBUS_RTU
51	PHASE ANGLE Y_B		Short Measured Floating Point	DEGREES			MFM	MODBUS_RTU
52	PHASE ANGLE B_R		Short Measured Floating Point	DEGREES			MFM	MODBUS_RTU

SIGNAL LIST FOR 11KV CAP BANK								
S.No.	**Signal Name**	**Short name**	**Data Type**	**States**		**Alarm /event**	**SOURCE**	**Protocol**
1	CB Status	CB_ST	Double point Status	OFF	ON	EVENT	PROT_IED	IEC 61850
2	CAP Bank Isolators Status	ISO_ST	Double point Status	OFF	ON	EVENT	PROT_IED	IEC 61850
3	SPRING CHARGED	SPCHG	Single Point Status	DISCHARGED	CHARGED	EVENT	PROT_IED	IEC 61850
4	Trip circuit Supervision	TCS	Single Point Status	UNHEALTHY	HEALTHY	Alarm & EVENT	PROT_IED	IEC 61850
5	CLOSE PERMISSIVE	CLS_PER	Single Point Status	NOT_OK	OK	Alarm & EVENT	PROT_IED	IEC 61852
5	CB in Service	CB_SER	Single Point Status	OUT	IN	EVENT	PROT_IED	IEC 61850
6	Master trip relay oprtd	86_	Single Point Status		OPERATED	Alarm & EVENT	PROT_IED	IEC 61850
7	Panel DC Fail	DCF	Single Point Status	UNHEALTHY	HEALTHY	Alarm & EVENT	CRP_Hardwired_RTU	IEC 61850
8	Panel AC Fail	ACF	Single Point Status	UNHEALTHY	HEALTHY	EVENT	PROT_IED	IEC 61850
9	L/R Switch	SCADENB	Single Point Status	LOCAL	SCADA	EVENT	PROT_IED	IEC 61850
10	Relay internal Failure	IRF	Single Point Status	UNHEALTHY	HEALTHY	Alarm & EVENT	CRP_Hardwired_RTU	IEC 61850
11	PT FUSE		Single Point Status	HEALTHY	BLOWN	Alarm & EVENT	PROT_IED	IEC 61850
12	PT MCB_ METERING		Single Point Status	NORMAL	TRIP	Alarm & EVENT	PROT_IED	IEC 61850
13	PT MCB_PROTECTION		Single Point Status	NORMAL	TRIP	Alarm & EVENT	PROT_IED	IEC 61850
14	NEUTRAL DISPLACEMENT_OPRTD	59N	Single Point Status	NORMAL	OPERATED	Alarm & EVENT	PROT_IED	IEC 61850
15	OVER VOLTAGE_PROT_OPRTD	59	Single Point Status	NORMAL	OPERATED	Alarm & EVENT	PROT_IED	IEC 61850
16	UNDER VOLTAGE_OPRTD	27	Single Point Status	NORMAL	OPERATED	Alarm & EVENT	PROT_IED	IEC 61850
17	TIMER STATUS		Single Point Status	RESET	OPERATED	EVENT	PROT_IED	IEC 61850
18	Over current Stage 1 (IDMT)	OC_STAGE_1	Single Point Status	NORMAL	OPERATED	Alarm & EVENT	PROT_IED	IEC 61850
19	Over Current Stage 2(DMT)	OC_STAGE_2	Single Point Status	NORMAL	OPERATED	Alarm & EVENT	PROT_IED	IEC 61850
20	Earth Fault Stage 1 (IDMT)	EF_STAGE_1	Single Point Status	NORMAL	OPERATED	Alarm & EVENT	PROT_IED	IEC 61850
21	Earth Fault Stage2 (DMT)	EF_STAGE_2	Single Point Status	NORMAL	OPERATED	Alarm & EVENT	PROT_IED	IEC 61850
22	CB Command	CB_CMD	Double Point Control	OPEN_CMD	CLOSE_CMD		PROT_IED	IEC 61850
23	Master trip relay_Reset	86_RST	Single Point Control	RESET_CMD			PROT_IED	IEC 61850
24	R_PH FAULT CURRENT		Measured Floating Input		AMPS		PROT_IED	IEC 61850
25	Y_PH FAULT CURRENT		Measured Floating Input		AMPS		PROT_IED	IEC 61850
26	B_PH FAULT CURRENT		Measured Floating Input		AMPS		PROT_IED	IEC 61850
27	NEUTRAL FAULT CURRENT		Measured Floating Input		AMPS		PROT_IED	IEC 61850
28	R_PH CURRENT		Short Measured Floating Point		AMPS		MFM	MODBUS_RTU
29	Y_PH CURRENT		Short Measured Floating Point		AMPS		MFM	MODBUS_RTU
30	B_PH CURRENT		Short Measured Floating Point		AMPS		MFM	MODBUS_RTU
31	R_Y PH VOLT		Short Measured Floating Point		VOLTS		MFM	MODBUS_RTU
32	Y_B PH VOLT		Short Measured Floating Point		VOLTS		MFM	MODBUS_RTU
33	B_R PH VOLT		Short Measured Floating Point		VOLTS		MFM	MODBUS_RTU
34	REACTIVE POWER		Short Measured Floating Point		VAR		MFM	MODBUS_RTU
35	POWER FACTOR		Short Measured Floating Point				MFM	MODBUS_RTU
36	NEUTRAL CURRENT		Short Measured Floating Point		AMPS		MFM	MODBUS_RTU
37	% THD VOLTAGE		Short Measured Floating Point		%		MFM	MODBUS_RTU
38	% THD CURRENT		Short Measured Floating Point		%		MFM	MODBUS_RTU
39	REACTIVE ENERGY		Short Measured Floating Point		VARH		MFM	MODBUS_RTU
40	PHASE ANGLE R_Y		Short Measured Floating Point		DEGREES		MFM	MODBUS_RTU

41	PHASE ANGLE Y_B		Short Measured Floating Point		DEGREES		MFM	MODBUS_RTU
42	PHASE ANGLE B_R		Short Measured Floating Point		DEGREES		MFM	MODBUS_RTU

SIGNAL LIST FOR 11KV BUSCOUPLER SWITCH GEARS								
S.No.	**Signal Name**	**Short name**	**Data Type**	**States**		**Alarm /event**	**SOURCE**	**Protocol**
1	CB Status	CB_ST	Double point Status	OFF	ON	EVENT	PROT_IED	IEC 61850
2	SPRING CHARGED	SPCHG	Single Point Status	DISCHARGED	CHARGED	EVENT	PROT_IED	IEC 61850
3	Trip circuit Supervision	TCS	Single Point Status	UNHEALTHY	HEALTHY	Alarm & EVENT	PROT_IED	IEC 61850
4	CLOSE PERMISSIVE	CLS_PER	Single Point Status	NOT_OK	OK	Alarm & EVENT	PROT_IED	IEC 61852
5	CB in Service	CB_SER	Single Point Status	OUT	IN	EVENT	PROT_IED	IEC 61850
6	Master trip relay oprtd	86_	Single Point Status	RESET	OPERATED	Alarm & EVENT	PROT_IED	IEC 61850
7	Panel DC Fail		Single Point Status	UNHEALTHY	HEALTHY	Alarm & EVENT	CRP_Hardwired_RTU	IEC 61850
8	Panel AC Fail		Single Point Status	UNHEALTHY	HEALTHY	EVENT	PROT_IED	IEC 61850
9	L/R Switch	SCADENB	Single Point Status	LOCAL	SCADA	EVENT	PROT_IED	IEC 61850
10	Relay internal Failure	IRF	Single Point Status	UNHEALTHY	HEALTHY	Alarm & EVENT	CRP_Hardwired_RTU	IEC 61850
11	BUS-1 PT FUSE		Single Point Status	HEALTHY	BLOWN	Alarm & EVENT	PROT_IED	IEC 61850
12	BUS-2 PT FUSE		Single Point Status	HEALTHY	BLOWN	Alarm & EVENT	PROT_IED	IEC 61850
13	PT-1 MCB_ METERING		Single Point Status	NORMAL	TRIP	Alarm & EVENT	PROT_IED	IEC 61850
14	PT-2 MCB_ METERING		Single Point Status	NORMAL	TRIP	Alarm & EVENT	PROT_IED	IEC 61850
15	PT MCB_PROTECTION		Single Point Status	NORMAL	TRIP	Alarm & EVENT	PROT_IED	IEC 61850
16	ANY_START	FPI	Single Point Status	NORMAL	OPERATED	Alarm & EVENT	PROT_IED	IEC 61849
17	Over current Stage 1 (IDMT)	OC_STAGE_1	Single Point Status	NORMAL	OPERATED	Alarm & EVENT	PROT_IED	IEC 61850
18	Over Current Stage 2(DMT)	OC_STAGE_2	Single Point Status	NORMAL	OPERATED	Alarm & EVENT	PROT_IED	IEC 61850
19	Earth Fault Stage 1 (IDMT)	EF_STAGE_1	Single Point Status	NORMAL	OPERATED	Alarm & EVENT	PROT_IED	IEC 61850
20	Earth Fault Stage2 (DMT)	EF_STAGE_2	Single Point Status	NORMAL	OPERATED	Alarm & EVENT	PROT_IED	IEC 61850
21	CB Command	CB_CMD	Double Point Control	OPEN_CMD	CLOSE_CMD		PROT_IED	IEC 61850
22	Master trip relay_Reset	86_RST	Single Point Control	RESET_CMD			PROT_IED	IEC 61850
23	R_PH FAULT CURRENT		Measured Floating Input				PROT_IED	IEC 61850
24	Y_PH FAULT CURRENT		Measured Floating Input				PROT_IED	IEC 61850
25	B_PH FAULT CURRENT		Measured Floating Input				PROT_IED	IEC 61850
26	NEUTRAL FAULT CURRENT		Measured Floating Input				PROT_IED	IEC 61850
27	DISTURBANCE RECORD		COMTRADE FILE FORMAT				PROT_IED	IEC 61850
28	R_PH CURRENT		Short Measured Floating Point				MFM	MODBUS_RTU
29	Y_PH CURRENT		Short Measured Floating Point				MFM	MODBUS_RTU
30	B_PH CURRENT		Short Measured Floating Point				MFM	MODBUS_RTU
31	BUS_1_R_Y PH VOLT		Short Measured Floating Point				MFM	MODBUS_RTU
32	BUS_1_Y_B PH VOLT		Short Measured Floating Point				MFM	MODBUS_RTU
33	BUS_1_B_R PH VOLT		Short Measured Floating Point				MFM	MODBUS_RTU
34	BUS_2_R_Y PH VOLT		Short Measured Floating Point				MFM	MODBUS_RTU
35	BUS_2_Y_B PH VOLT		Short Measured Floating Point				MFM	MODBUS_RTU
36	BUS_2_B_R PH VOLT		Short Measured Floating Point				MFM	MODBUS_RTU
37	NEUTRAL CURRENT		Short Measured Floating Point				MFM	MODBUS_RTU
38	% THD VOLTAGE		Short Measured Floating Point				MFM	MODBUS_RTU
39	% THD CURRENT		Short Measured Floating Point				MFM	MODBUS_RTU
40	PHASE ANGLE R_Y		Short Measured Floating Point				MFM	MODBUS_RTU
41	PHASE ANGLE Y_B		Short Measured Floating Point				MFM	MODBUS_RTU
42	PHASE ANGLE B_R		Short Measured Floating Point				MFM	MODBUS_RTU

SIGNAL LIST FOR 33KV INCOMER & 33KV OUTGOING SWITCH GEARS PANELS

S.No.	Signal Name	Short name	Data Type	States		Alarm /event	SOURCE	Protocol
1	CB Status	CB_ST	Double point Status	OFF	ON	EVENT	PROT_IED & CRP Hardwired to I	IEC 61850
2	89A_STATUS *(For Outdoor & GIS stations)*	89A_ST	Double point Status	OFF	ON	EVENT	PROT_IED	IEC 61850
3	89B_STATUS *(For Outdoor & GIS stations)*	89B_ST	Double point Status	OFF	ON	EVENT	PROT_IED	IEC 61850
4	89AE_STATUS *(For Outdoor & GIS stations)*	89AE_ST	Double point Status	OFF	ON	EVENT	PROT_IED	IEC 61850
5	89L_STATUS *(For Outdoor & GIS stations)*	89L_ST	Double point Status	OFF	ON	EVENT	PROT_IED	IEC 61850
6	89LE_STATUS *(For Outdoor & GIS stations)*	89LE_ST	Double point Status	OFF	ON	EVENT	PROT_IED	IEC 61850
7	SF6 GAS_PRESSURE_CB_Compartment *(For SF6 Switchgears)*		Single Point Status	NORMAL	LOW	Alarm & EVENT	PROT_IED	IEC 61850
8	SF6 GAS_PRESSURE_LOCKOUT *(For SF6 Switchgears)*		Single Point Status	NORMAL	OPERATED	Alarm & EVENT	PROT_IED	IEC 61850
9	SF6 GAS_PRESSURE_LOW_BB1_Compartment *(For SF6 Switchgears)*		Single Point Status	NORMAL	LOW	Alarm & EVENT	PROT_IED	IEC 61850
10	SF6 GAS_PRESSURE_LOW_BB2_Compartment *(For SF6 Switchgears)*		Single Point Status	NORMAL	LOW	Alarm & EVENT	PROT_IED	IEC 61850
11	SPRING CHARGED	SPCHG	Single Point Status	DISCHARGED	CHARGED	EVENT	PROT_IED	IEC 61850
12	Trip circuit 1 Supervision	TCS	Single Point Status	UNHEALTHY	HEALTHY	Alarm & EVENT	PROT_IED	IEC 61850
13	Trip circuit 2 Supervision	TCS	Single Point Status	UNHEALTHY	HEALTHY	Alarm & EVENT	PROT_IED	IEC 61850
14	Close Permissive		Single Point Status	not ok	OK	EVENT	PROT_IED	IEC 61850
15	CB in Service *(For VCB)*	CB_SER	Single Point Status	OUT	IN	EVENT	PROT_IED	IEC 61850
16	Master trip relay oprtd	86	Single Point Status	RESET	OPERATED	Alarm & EVENT	PROT_IED	IEC 61850
17	Main DC1_supervision	80DC_1	Single Point Status	UNHEALTHY	HEALTHY	Alarm & EVENT	CRP_Hardwired_RTU	
18	Main DC2_supervision	80DC_2	Single Point Status	UNHEALTHY	HEALTHY	Alarm & EVENT	CRP_Hardwired_RTU	
19	DC MCB_supervision		Single Point Status	NORMAL	TRIP	Alarm & EVENT	PROT_IED	IEC 61850
20	Panel AC		Single Point Status	UNHEALTHY	HEALTHY	EVENT	PROT_IED	IEC 61850
21	VT FUSE		Single Point Status	HEALTHY	BLOWN	Alarm & EVENT	PROT_IED	IEC 61850
22	PT MCB_TRIP METERING		Single Point Status	NORMAL	TRIP	Alarm & EVENT	PROT_IED	IEC 61850
23	PT MCB_TRIP PROTECTION		Single Point Status	NORMAL	TRIP	Alarm & EVENT	PROT_IED	IEC 61850
24	L/R Switch in SCADA	SCADENB	Single Point Status	LOCAL	SCADA	EVENT	PROT_IED	IEC 61850
25	OC/EF RELAY HEALTH SUPERVISION	IRF 51/51N	Single Point Status	UNHEALTHY	HEALTHY	Alarm & EVENT	CRP_Hardwired_RTU	IEC 61850
26	87_ RELAY HEALTH SUPERVISION	IRF 87	Single Point Status	UNHEALTHY	HEALTHY	Alarm & EVENT	CRP_Hardwired_RTU	IEC 61850
27	LDR Carrier channel 1 LINK	LDR CH LK-1	Single Point Status	HEALTHY_	UNHEALTHY	Alarm & EVENT	PROT_IED	IEC 61850
28	LDR Carrier channel 2 LINK	LDR CH LK-2	Single Point Status	HEALTHY_	UNHEALTHY	Alarm & EVENT	PROT_IED	IEC 61850
29	ANY_START	FPI	Single Point Status	NORMAL	OPERATED	Alarm & EVENT	PROT_IED	IEC 61850
30	Over current Stage 1 (IDMT)	OC_STAGE_1	Single Point Status	NORMAL	OPERATED	Alarm & EVENT	PROT_IED	IEC 61850

31	Over Current Stage 2(DMT)	OC_STAGE_2	Single Point Status	NORMAL	OPERATED	Alarm & EVENT	PROT_IED	IEC 61850
32	Earth Fault Stage 1 (IDMT)	EF_STAGE_1	Single Point Status	NORMAL	OPERATED	Alarm & EVENT	PROT_IED	IEC 61850
33	Earth Fault Stage2 (DMT)	EF_STAGE_2	Single Point Status	NORMAL	OPERATED	Alarm & EVENT	PROT_IED	IEC 61850
34	Differential_Prot_Oprtd	87L	Single Point Status	NORMAL	OPERATED	Alarm & EVENT	PROT_IED	IEC 61850
35	Distance_Prot_Oprtd	21	Single Point Status	NORMAL	OPERATED	Alarm & EVENT	PROT_IED	IEC 61850
36	LBB ZONE-1 Protection	50BF_1	Single Point Status	NORMAL	OPERATED	Alarm & EVENT	PROT_IED	IEC 61850
37	LBB ZONE-2 Protection	50BF_2	Single Point Status	NORMAL	OPERATED	Alarm & EVENT	PROT_IED	IEC 61850
38	BROKEN_CONDUCTOR_PROTECTION		Single Point Status	NORMAL	OPERATED	Alarm & EVENT	PROT_IED	IEC 61850
39	SYNCHRO_CHECK		Single Point Status	NOT OK	OK	EVENT	PROT_IED	IEC 61850
40	CB Command	CB_CMD	Double Point Control	OPEN_CMD	CLOSE_CMD		PROT_IED & CRP Hardwired to I	IEC 61850
41	89A_CMD	89A_CMD	Double Point Control	OPEN_CMD	CLOSE_CMD		PROT_IED	IEC 61850
42	89B_CMD	89B_CMD	Double Point Control	OPEN_CMD	CLOSE_CMD		PROT_IED	IEC 61850
43	89L_CMD	89L_CMD	Double Point Control	OPEN_CMD	CLOSE_CMD		PROT_IED	IEC 61850
44	Master trip relay_Reset	86_RST	Single Point Control	RESET_CMD			PROT_IED	IEC 61850
45	R_PH FAULT CURRENT		Measured Floating Input				PROT_IED	IEC 61850
46	Y_PH FAULT CURRENT		Measured Floating Input				PROT_IED	IEC 61850
47	B_PH FAULT CURRENT		Measured Floating Input				PROT_IED	IEC 61850
48	NEUTRAL FAULT CURRENT		Measured Floating Input				PROT_IED	IEC 61850
49	Differential BIAS Current R_PH		Measured Floating Input				PROT_IED	IEC 61850
50	Differential BIAS Current Y_PH		Measured Floating Input				PROT_IED	IEC 61850
51	Differential BIAS Current B_PH		Measured Floating Input				PROT_IED	IEC 61850
52	Fault distance/Impedance		Measured Floating Input				PROT_IED	IEC 61850
53	DISTURBANCE RECORD		COMTRADE FILE FORMAT				PROT_IED	IEC 61850
54	R_PH CURRENT		Short Measured Floating Point				MFM	MODBUS_RTU
55	Y_PH CURRENT		Short Measured Floating Point				MFM	MODBUS_RTU
56	B_PH CURRENT		Short Measured Floating Point				MFM	MODBUS_RTU
57	R_Y PH VOLT		Short Measured Floating Point				MFM	MODBUS_RTU
58	Y_B PH VOLT		Short Measured Floating Point				MFM	MODBUS_RTU
59	B_R PH VOLT		Short Measured Floating Point				MFM	MODBUS_RTU
60	ACTIVE POWER		Short Measured Floating Point				MFM	MODBUS_RTU
61	REACTIVE POWER		Short Measured Floating Point				MFM	MODBUS_RTU
62	APPARENT POWER		Short Measured Floating Point				MFM	MODBUS_RTU
63	POWER FACTOR		Short Measured Floating Point				MFM	MODBUS_RTU
64	MAXIMUM DEMAND		Short Measured Floating Point				MFM	MODBUS_RTU
65	NEUTRAL CURRENT		Short Measured Floating Point				MFM	MODBUS_RTU
66	% THD VOLTAGE		Short Measured Floating Point				MFM	MODBUS_RTU
67	% THD CURRENT		Short Measured Floating Point				MFM	MODBUS_RTU
68	ACTIVE ENERGY		Short Measured Floating Point				MFM	MODBUS_RTU
69	REACTIVE ENERGY		Short Measured Floating Point				MFM	MODBUS_RTU
70	APPARENT ENERGY		Short Measured Floating Point				MFM	MODBUS_RTU
71	PHASE ANGLE R_Y		Short Measured Floating Point				MFM	MODBUS_RTU
72	PHASE ANGLE Y_B		Short Measured Floating Point				MFM	MODBUS_RTU
73	PHASE ANGLE B_R		Short Measured Floating Point				MFM	MODBUS_RTU

SIGNAL LIST FOR 66KV/33KV Bus Coupler

S.No.	Signal Name	Short name	Data Type	States		Alarm /event	SOURCE	Protocol
1	CB Status	CB_ST	Double point Status	OFF	ON	EVENT	PROT_IED	IEC 61850
2	89A_STATUS *(For Outdoor & GIS stations)*	89A_ST	Double point Status	OFF	ON	EVENT	PROT_IED	IEC 61850
3	89B_STATUS *(For Outdoor & GIS stations)*	89B_ST	Double point Status	OFF	ON	EVENT	PROT_IED	IEC 61850
4	89AE_STATUS *(For Outdoor & GIS stations)*	89AE_ST	Double point Status	OFF	ON	EVENT	PROT_IED	IEC 61850
5	89BE_STATUS *(For Outdoor & GIS stations)*	89BE_ST	Double point Status	OFF	ON	EVENT	PROT_IED	IEC 61850
6	SF6 GAS_PRESSURE_CB_Compartment *(For SF6 Switchgears)*		Single Point Status	NORMAL	LOW	Alarm & EVENT	PROT_IED	IEC 61850
7	SF6 GAS_PRESSURE_LOCKOUT *(For SF6 Switchgears)*		Single Point Status	NORMAL	OPERATED	Alarm & EVENT	PROT_IED	IEC 61850
8	SF6 GAS_PRESSURE_LOW_BB1_Compartment *(For SF6 Switchgears)*		Single Point Status	NORMAL	LOW	Alarm & EVENT	PROT_IED	IEC 61850
9	SF6 GAS_PRESSURE_LOW_BB2_Compartment *(For SF6 Switchgears)*		Single Point Status	NORMAL	LOW	Alarm & EVENT	PROT_IED	IEC 61850
10	SPRING CHARGED	SPCHG	Single Point Status	DISCHARGED	CHARGED	EVENT	PROT_IED	IEC 61850
11	Trip circuit 1 Supervision	TCS	Single Point Status	UNHEALTHY	HEALTHY	Alarm & EVENT	PROT_IED	IEC 61850
12	Trip circuit 2 Supervision	TCS	Single Point Status	UNHEALTHY	HEALTHY	Alarm & EVENT	PROT_IED	IEC 61850
13	Close Permissive		Single Point Status	not ok	OK	EVENT	PROT_IED	IEC 61850
14	CB in Service *(For VCB)*	CB_SER	Single Point Status	OUT	IN	EVENT	PROT_IED	IEC 61850
15	Master trip relay oprtd	86	Single Point Status	RESET	OPERATED	Alarm & EVENT	PROT_IED	IEC 61850
16	Main DC1_supervision	80DC_1	Single Point Status	UNHEALTHY	HEALTHY	Alarm & EVENT	CRP_Hardwired_RTU	IEC 61850
17	Main DC2_supervision	80DC_2	Single Point Status	UNHEALTHY	HEALTHY	Alarm & EVENT	CRP_Hardwired_RTU	IEC 61850
18	DC MCB_supervision		Single Point Status	NORMAL	TRIP	Alarm & EVENT	PROT_IED	IEC 61850
19	Panel AC		Single Point Status	UNHEALTHY	HEALTHY	EVENT	PROT_IED	IEC 61850
20	PT1 FUSE BLOWN		Single Point Status	HEALTHY	BLOWN	Alarm & EVENT	PROT_IED	IEC 61850
21	PT2 FUSE BLOWN		Single Point Status	HEALTHY	BLOWN	Alarm & EVENT	PROT_IED	IEC 61850
22	PT MCB_TRIP METERING		Single Point Status	NORMAL	TRIP	Alarm & EVENT	PROT_IED	IEC 61850
23	PT MCB_TRIP PROTECTION		Single Point Status	NORMAL	TRIP	Alarm & EVENT	PROT_IED	IEC 61850
24	L/R Switch in SCADA	SCADENB	Single Point Status	LOCAL	SCADA	EVENT	PROT_IED	IEC 61850
25	OC/EF RELAY HEALTH SUPERVISION	IRF 51/51N	Single Point Status	UNHEALTHY	HEALTHY	Alarm & EVENT	CRP_Hardwired_RTU	IEC 61850
26	ANY_START	FPI	Single Point Status	NORMAL	OPERATED	Alarm & EVENT	PROT_IED	IEC 61850
27	Over current Stage 1 (IDMT)	OC_STAGE_1	Single Point Status	NORMAL	OPERATED	Alarm & EVENT	PROT_IED	IEC 61850
28	Over Current Stage 2(DMT)	OC_STAGE_2	Single Point Status	NORMAL	OPERATED	Alarm & EVENT	PROT_IED	IEC 61850
29	Earth Fault Stage 1 (IDMT)	EF_STAGE_1	Single Point Status	NORMAL	OPERATED	Alarm & EVENT	PROT_IED	IEC 61850
30	Earth Fault Stage2 (DMT)	EF_STAGE_2	Single Point Status	NORMAL	OPERATED	Alarm & EVENT	PROT_IED	IEC 61850

31	LBB ZONE-1 Protection	50BF_1	Single Point Status	NORMAL	OPERATED	Alarm & EVENT	PROT_IED	IEC 61850
32	LBB ZONE-2 Protection	50BF_2	Single Point Status	NORMAL	OPERATED	Alarm & EVENT	PROT_IED	IEC 61850
33	BROKEN_CONDUCTOR_PROTECTION		Single Point Status	NORMAL	OPERATED	Alarm & EVENT	PROT_IED	IEC 61850
34	SYNCHRO_CHECK		Single Point Status	NOT OK	OK	EVENT	PROT_IED	IEC 61850
35	CB Command	CB_CMD	Double Point Control	OPEN_CMD	CLOSE_CMD		PROT_IED	IEC 61850
36	89A_CMD	89A_CMD	Double Point Control	OPEN_CMD	CLOSE_CMD		PROT_IED	IEC 61850
37	89B_CMD	89B_CMD	Double Point Control	OPEN_CMD	CLOSE_CMD		PROT_IED	IEC 61850
38	89L_CMD	89L_CMD	Double Point Control	OPEN_CMD	CLOSE_CMD		PROT_IED	IEC 61850
39	Master trip relay_Reset	86_RST	Single Point Control	RESET_CMD			PROT_IED	IEC 61850
40	R_PH FAULT CURRENT		Measured Floating Input				PROT_IED	IEC 61850
41	Y_PH FAULT CURRENT		Measured Floating Input				PROT_IED	IEC 61850
42	B_PH FAULT CURRENT		Measured Floating Input				PROT_IED	IEC 61850
43	NEUTRAL FAULT CURRENT		Measured Floating Input				PROT_IED	IEC 61850
44	R_PH CURRENT		Short Measured Floating Point				MFM	MODBUS_RTU
45	Y_PH CURRENT		Short Measured Floating Point				MFM	MODBUS_RTU
46	B_PH CURRENT		Short Measured Floating Point				MFM	MODBUS_RTU
47	BUS_1 R_Y PH VOLT		Short Measured Floating Point				MFM	MODBUS_RTU
48	BUS_1 Y_B PH VOLT		Short Measured Floating Point				MFM	MODBUS_RTU
49	BUS_1 B_R PH VOLT		Short Measured Floating Point				MFM	MODBUS_RTU
50	BUS_2 R_Y PH VOLT		Short Measured Floating Point				MFM	MODBUS_RTU
51	BUS_2 Y_B PH VOLT		Short Measured Floating Point				MFM	MODBUS_RTU
52	BUS_2_B_R PH VOLT		Short Measured Floating Point				MFM	MODBUS_RTU
53	MAXIMUM DEMAND		Short Measured Floating Point				MFM	MODBUS_RTU
54	NEUTRAL CURRENT		Short Measured Floating Point				MFM	MODBUS_RTU
55	% THD VOLTAGE		Short Measured Floating Point				MFM	MODBUS_RTU
56	% THD CURRENT		Short Measured Floating Point				MFM	MODBUS_RTU
57	PHASE ANGLE R_Y		Short Measured Floating Point				MFM	MODBUS_RTU
58	PHASE ANGLE Y_B		Short Measured Floating Point				MFM	MODBUS_RTU
59	PHASE ANGLE B_R		Short Measured Floating Point				MFM	MODBUS_RTU

SIGNAL LIST FOR 66KV/33KV PTR Control & Relay Panels

S.No.	Signal Name	Short name	Data Type	States		Alarm /event	SOURCE	Protocol
1	CB Status	CB_ST	Double point Status	OFF	ON	EVENT	PROT_IED	IEC 61850
2	89A_STATUS *(For Outdoor & GIS stations)*	89A_ST	Double point Status	OFF	ON	EVENT	PROT_IED	IEC 61850
3	89B_STATUS *(For Outdoor & GIS stations)*	89B_ST	Double point Status	OFF	ON	EVENT	PROT_IED	IEC 61850
4	89AE_STATUS *(For Outdoor & GIS stations)*	89AE_ST	Double point Status	OFF	ON	EVENT	PROT_IED	IEC 61850
5	89T_STATUS *(For Outdoor & GIS stations)*	89L_ST	Double point Status	OFF	ON	EVENT	PROT_IED	IEC 61850
6	89TE_STATUS *(For Outdoor & GIS stations)*	89LE_ST	Double point Status	OFF	ON	EVENT	PROT_IED	IEC 61850
7	SF6 GAS_PRESSURE_CB_Compartment *(For SF6 Switchgears)*		Single Point Status	NORMAL	LOW	Alarm & EVENT	PROT_IED	IEC 61850
8	SF6 GAS_PRESSURE_LOCKOUT *(For SF6 Switchgears)*		Single Point Status	NORMAL	OPERATED	Alarm & EVENT	PROT_IED	IEC 61850
9	SF6 GAS_PRESSURE_LOW_BB1_Compartment *(For SF6 Switchgears)*		Single Point Status	NORMAL	LOW	Alarm & EVENT	PROT_IED	IEC 61850
10	SF6 GAS_PRESSURE_LOW_BB2_Compartment *(For SF6 Switchgears)*		Single Point Status	NORMAL	LOW	Alarm & EVENT	PROT_IED	IEC 61850
11	SPRING CHARGED	SPCHG	Single Point Status	DISCHARGED	CHARGED	EVENT	PROT_IED	IEC 61850
12	Trip circuit 1 Supervision	TCS	Single Point Status	UNHEALTHY	HEALTHY	Alarm & EVENT	PROT_IED	IEC 61850
13	Trip circuit 2 Supervision	TCS	Single Point Status	UNHEALTHY	HEALTHY	Alarm & EVENT	PROT_IED	IEC 61850
14	CLOSE PERMISSIVE	CLS_PER	Single Point Status	NOT_OK	OK	Alarm & EVENT	PROT_IED	IEC 61850
15	CB in Service *(For VCB)*	CB_SER	Single Point Status	OUT	IN	EVENT	PROT_IED	IEC 61850
16	Master trip relay oprtd	86	Single Point Status	RESET	OPERATED	Alarm & EVENT	PROT_IED	IEC 61850
17	Main DC1_supervision	80DC_1	Single Point Status	UNHEALTHY	HEALTHY	Alarm & EVENT	ADJACENT PANEL IED	IEC 61850
18	Main DC2_supervision	80DC_2	Single Point Status	UNHEALTHY	HEALTHY	Alarm & EVENT	ADJACENT PANEL IED	IEC 61850
19	DC MCB_supervision		Single Point Status	NORMAL	TRIP	Alarm & EVENT	PROT_IED	IEC 61850

20	Panel AC		Single Point Status	UNHEALTHY	HEALTHY	EVENT	PROT_IED	IEC 61850
21	VT FUSE	27	Single Point Status	HEALTHY	BLOWN	Alarm & EVENT	PROT_IED	IEC 61850
22	PT MCB_TRIP METERING		Single Point Status	NORMAL	TRIP	Alarm & EVENT	PROT_IED	IEC 61850
23	PT MCB_TRIP PROTECTION		Single Point Status	NORMAL	TRIP	Alarm & EVENT	PROT_IED	IEC 61850
24	L/R Switch in SCADA	SCADENB	Single Point Status	LOCAL	SCADA	EVENT	PROT_IED	IEC 61850
25	OC/EF RELAY HEALTH SUPERVISION	IRF 51/51N	Single Point Status	UNHEALTHY	HEALTHY	Alarm & EVENT	ADJACENT PANEL IED	IEC 61850
26	87_ RELAY HEALTH SUPERVISION	IRF 87	Single Point Status	UNHEALTHY	HEALTHY	Alarm & EVENT	ADJACENT PANEL IED	IEC 61850
27	TMU_HEALTH SUPERVISION	IRF_TMU	Single Point Status	UNHEALTHY	HEALTHY	Alarm & EVENT	ADJACENT PANEL IED	IEC 61850
28	ANY_START	FPI	Single Point Status	NORMAL	OPERATED	Alarm & EVENT	PROT_IED	IEC 61850
29	INRUSH DETECTED		Single Point Status	NORMAL	OPERATED	Alarm & EVENT	PROT_IED	IEC 61850
30	Over current Stage 1 (IDMT)	OC_STAGE_1	Single Point Status	NORMAL	OPERATED	Alarm & EVENT	PROT_IED	IEC 61850
31	Over Current Stage 2(DMT)	OC_STAGE_2	Single Point Status	NORMAL	OPERATED	Alarm & EVENT	PROT_IED	IEC 61850
32	Earth Fault Stage 1 (IDMT)	EF_STAGE_1	Single Point Status	NORMAL	OPERATED	Alarm & EVENT	PROT_IED	IEC 61850
33	Earth Fault Stage2 (DMT)	EF_STAGE_2	Single Point Status	NORMAL	OPERATED	Alarm & EVENT	PROT_IED	IEC 61850
34	Differential_Prot_Oprtd	87L	Single Point Status	NORMAL	OPERATED	Alarm & EVENT	PROT_IED	IEC 61850
35	LBB PROTECTION INITIATED	50BF	Single Point Status	NORMAL	OPERATED	Alarm & EVENT	PROT_IED	IEC 61850
36	LBB ZONE-1 Protection	96_1	Single Point Status	NORMAL	OPERATED	Alarm & EVENT	PROT_IED	IEC 61850
37	LBB ZONE-2 Protection	96_2	Single Point Status	NORMAL	OPERATED	Alarm & EVENT	PROT_IED	IEC 61850
38	Restricted Earth Fault Protection	64	Single Point Status	NORMAL	OPERATED	Alarm & EVENT	PROT_IED	IEC 61850
39	Stanby Earth Fault Protection		Single Point Status	NORMAL	OPERATED	Alarm & EVENT	PROT_IED	IEC 61850
40	INTERTRIP PROTECTION		Single Point Status	NORMAL	OPERATED	Alarm & EVENT	PROT_IED	IEC 61850
41	OTI_ALARM		Single Point Status	NORMAL	OPERATED		TMU	IEC 61850
42	OTI_TRIP		Single Point Status	NORMAL	OPERATED		TMU	IEC 61850

43	WTI_ALARM		Single Point Status	NORMAL	OPERATED		TMU	IEC 61850
44	WTI_TRIP		Single Point Status	NORMAL	OPERATED		TMU	IEC 61850
45	BUCHHOLZ_ALARM		Single Point Status	NORMAL	OPERATED		TMU	IEC 61850
46	BUCHHOLZ_TRIP		Single Point Status	NORMAL	OPERATED		TMU	IEC 61850
47	MOG_ALARM		Single Point Status	NORMAL	OPERATED		TMU	IEC 61850
48	OLTC OSR		Single Point Status	NORMAL	OPERATED		TMU	IEC 61850
49	PRV_TRIP		Single Point Status	NORMAL	OPERATED		TMU	IEC 61850
50	SPRV_TRIP		Single Point Status	NORMAL	OPERATED		TMU	IEC 61850
51	OLTC _PRV_TRIP		Single Point Status	NORMAL	OPERATED			
52	OLTC_L/R_STATUS		Single Point Status	LOCAL	REMOTE		TMU	IEC 61850
53	OLTC_MOTOR AC SUPPLY		Single Point Status	NORMAL	FAIL		TMU	IEC 61850
54	TMU_AUTO_MANUAL_STATUS		Single Point Status	MANUAL	AUTO		TMU	IEC 61850
55	TMU_L/R_STATUS		Single Point Status	LOCAL	REMOTE		TMU	IEC 61850
56	TAP_CHANGER_STATUS		Single Point Status	IDLE	IN_PROGRESS		TMU	IEC 61850
57	FAN_GROUP1		Single Point Status	OFF	ON		TMU	IEC 61850
58	FAN_GROUP2		Single Point Status	OFF	ON		TMU	IEC 61850
59	CB Command	CB_CMD	Double Point Control	OPEN_CMD	CLOSE_CMD		PROT_IED	IEC 61850
60	89A_CMD	89A_CMD	Double Point Control	OPEN_CMD	CLOSE_CMD		PROT_IED	IEC 61850
61	89B_CMD	89B_CMD	Double Point Control	OPEN_CMD	CLOSE_CMD		PROT_IED	IEC 61850
62	89T_CMD	89L_CMD	Double Point Control	OPEN_CMD	CLOSE_CMD		PROT_IED	IEC 61850
63	Master trip relay_Reset	86_RST	Single Point Control	RESET_CMD			PROT_IED	IEC 61850
64	TMU_AUTO_MANUAL_COMMAND	OLTC A/M_CMD	Double Point Control	AUTO_CMD	MANUAL_CMD		TMU	IEC 61850
65	TMU_TAP_RAISE/LOWER_COMMAND		Regulation command output				TMU	

66	WINDING TEMPERATURE_INDICATOR (WTI)	WTI	Short Measured Floating Point				TMU	IEC61850
67	OIL_TEMPERATURE_INDICATOR (OTI)	OTI	Short Measured Floating Point				TMU	IEC61850
68	TAP POSITION_INDICATOR (TPII)	TPI	Short Measured Floating Point				TMU	IEC61850
69	TAP COUNTER		SHORT INTEGER				TMU	IEC61850
70	R_PH FAULT CURRENT		Measured Floating Input				PROT_IED	IEC 61850
71	Y_PH FAULT CURRENT		Measured Floating Input				PROT_IED	IEC 61850
72	B_PH FAULT CURRENT		Measured Floating Input				PROT_IED	IEC 61850
73	NEUTRAL FAULT CURRENT		Measured Floating Input				PROT_IED	IEC 61850
74	Differential BIAS Current R_PH		Measured Floating Input				PROT_IED	IEC 61850
75	Differential BIAS Current Y_PH		Measured Floating Input				PROT_IED	IEC 61850
76	Differential BIAS Current B_PH		Measured Floating Input				PROT_IED	IEC 61850
77	R_PH CURRENT		Short Measured Floating Point				MFM	MODBUS_RTU
78	Y_PH CURRENT		Short Measured Floating Point				MFM	MODBUS_RTU
79	B_PH CURRENT		Short Measured Floating Point				MFM	MODBUS_RTU
80	R_Y PH VOLT		Short Measured Floating Point				MFM	MODBUS_RTU
81	Y_B PH VOLT		Short Measured Floating Point				MFM	MODBUS_RTU
82	B_R PH VOLT		Short Measured Floating Point				MFM	MODBUS_RTU
83	ACTIVE POWER		Short Measured Floating Point				MFM	MODBUS_RTU
84	REACTIVE POWER		Short Measured Floating Point				MFM	MODBUS_RTU
85	APPARENT POWER		Short Measured Floating Point				MFM	MODBUS_RTU
86	POWER FACTOR		Short Measured Floating Point				MFM	MODBUS_RTU
87	MAXIMUM DEMAND		Short Measured Floating Point				MFM	MODBUS_RTU
88	NEUTRAL CURRENT		Short Measured Floating Point				MFM	MODBUS_RTU

89	% THD VOLTAGE		Short Measured Floating Point				MFM	MODBUS_RTU
90	% THD CURRENT		Short Measured Floating Point				MFM	MODBUS_RTU
91	ACTIVE ENERGY		Short Measured Floating Point				MFM	MODBUS_RTU
92	REACTIVE ENERGY		Short Measured Floating Point				MFM	MODBUS_RTU
93	APPARENT ENERGY		Short Measured Floating Point				MFM	MODBUS_RTU
94	PHASE ANGLE R_Y		Short Measured Floating Point				MFM	MODBUS_RTU
95	PHASE ANGLE Y_B		Short Measured Floating Point				MFM	MODBUS_RTU
96	PHASE ANGLE B_R		Short Measured Floating Point				MFM	MODBUS_RTU

Multifunctional meter Signal list

S.No.	Signal Name	data type	Unit
1	R_PH CURRENT	Short Measured Floating Point	AMPS
2	Y_PH CURRENT	Short Measured Floating Point	AMPS
3	B_PH CURRENT	Short Measured Floating Point	AMPS
4	R_Y PH VOLT	Short Measured Floating Point	Volt
5	Y_B PH VOLT	Short Measured Floating Point	Volt
6	B_R PH VOLT	Short Measured Floating Point	Volt
7	ACTIVE POWER	Short Measured Floating Point	Watts
8	REACTIVE POWER	Short Measured Floating Point	VAR
9	APPARENT POWER	Short Measured Floating Point	VA
10	POWER FACTOR	Short Measured Floating Point	
11	MAXIMUM DEMAND	Short Measured Floating Point	watts
12	NEUTRAL CURRENT	Short Measured Floating Point	amps
13	% THD VOLTAGE	Short Measured Floating Point	%
14	% THD CURRENT	Short Measured Floating Point	%
15	ACTIVE ENERGY	Short Measured Floating Point	WH
16	REACTIVE ENERGY	Short Measured Floating Point	VARH
17	APPARENT ENERGY	Short Measured Floating Point	VA
18	PHASE ANGLE R_Y	Short Measured Floating Point	DEGREES
19	PHASE ANGLE Y_B	Short Measured Floating Point	DEGREES
20	PHASE ANGLE B_R	Short Measured Floating Point	DEGREES

SIGNAL LIST PTR NIFPS PANEL

S.No	SIGNAL NAME	DATA TYPE	STATES	
1	NIFPS SYSTEM STATUS	SINGLE POINT INPUT	NORMAL	OPERATED
2	NIFPS SYSTEM POSITION	SINGLE POINT INPUT	IN	OUT OF SERVICE
3	TCIV POSITION	SINGLE POINT INPUT	OPEN	CLOSED
4	FIRE DETECTOR	SINGLE POINT INPUT	NORMAL	TRIP
5	N2 CYL PRESSURE	SINGLE POINT INPUT	NORMAL	LOW
6	SYSTEM COMMON ALARM	SINGLE POINT INPUT	NORMAL	OPERATED
7	NIFPS DC SUPPLY	SINGLE POINT INPUT	HEALTHY	FAIL

Signal list : Battery Charger					
S.No.	**Signal Name**	**Data type**		**Protocol**	**Unit**
1	Charger A Voltage	Measurand	16 bit Integer	Modbus RTU	V
2	Charger A current	Measurand	16 bit Integer	Modbus RTU	A
3	Charger B Voltage	Measurand	16 bit Integer	Modbus RTU	V
4	charger B current	Measurand	16 bit Integer	Modbus RTU	A
5	Battery Voltage	Measurand	16 bit Integer	Modbus RTU	V
6	Battery Current	Measurand	16 bit Integer	Modbus RTU	A
7	Load Voltage	Measurand	16 bit Integer	Modbus RTU	V
8	Load Current	Measurand	16 bit Integer	Modbus RTU	A
9	Charger A +ve to GND Volt	Measurand	16 bit Integer	Modbus RTU	V
10	Charger A -ve to GND Volt	Measurand	16 bit Integer	Modbus RTU	V
11	Charger B +ve to GND Volt	Measurand	16 bit Integer	Modbus RTU	V
12	Charger B -ve to GND Volt	Measurand	16 bit Integer	Modbus RTU	V
13	Charger Mains Fail	Single Bit Status	boolean	Modbus RTU	
14	Charger A AC Under Voltage	Single Bit Status	boolean	Modbus RTU	
15	Charger B AC Under Voltage	Single Bit Status	boolean	Modbus RTU	
16	Charger A AC MCCB Trip	Single Bit Status	boolean	Modbus RTU	
17	Charger A DC MCCB Trip	Single Bit Status	boolean	Modbus RTU	
18	Charger B AC MCCB Trip	Single Bit Status	boolean	Modbus RTU	
19	Charger B DC MCCB Trip	Single Bit Status	boolean	Modbus RTU	
20	Battery MCCB trip	Single Bit Status	boolean	Modbus RTU	
21	Charger A Rectifier /Capacitor Fuse Blown	Single Bit Status	boolean	Modbus RTU	
22	Charger B Rectifier /Capacitor Fuse Blown	Single Bit Status	boolean	Modbus RTU	
23	charger A on boost mode	Single Bit Status	boolean	Modbus RTU	
24	charger B on boost mode	Single Bit Status	boolean	Modbus RTU	
25	Insulation Failure (DC Leakage)	Single Bit Status	boolean	Modbus RTU	
26	DC Bus Over voltage	Single Bit Status	boolean	Modbus RTU	
27	DC Bus under Voltage	Single Bit Status	boolean	Modbus RTU	
28	SMPS Module 1 Fail (for SMPS based Charger)	Single Bit Status	boolean	Modbus RTU	
29	SMPS Module 2 Fail(for SMPS based Charger)	Single Bit Status	boolean	Modbus RTU	
30	SMPS Module n Fail(for SMPS based Charger)	Single Bit Status	boolean	Modbus RTU	
31	DCDB Any DC MCB/ MCCB trip	Single Bit status	boolean	Modbus RTU	

SIGNAL LIST : Li-ion Battery bank BMS System

S.No.	Signal Name	UOM	states		Signal Type
1	Battery Voltage	volts			Measurand
2	Pack Voltage	volts			Measurand
3	Charging Current	Amps			Measurand
4	Discharging Current	Amps			Measurand
5	State of Charge	%			Measurand
6	State of Health	%			Measurand
7	Rated Capacity	Ah			Measurand
8	Remaining Capacity	Ah			Measurand
9	Backup Time	Hrs			Measurand
10	Battery mode		1.Charging 2. Discharging. 3. IDLE		Measurand
11	Battery Temperature	°C			Measurand
12					
13	Over current on Charge alarm		normal	operated	status
14	Over current on Discharge alarm		normal	operated	status
15	Over Temperature on Charge alarm		normal	operated	status
16	Over Temperature on Discharge alarm		normal	operated	status
17	Over current on Charge Protection		normal	operated	status
18	Over current on Discharge Protection		normal	operated	status
19	Over Temperature on Charge Protection		normal	operated	status
20	Over Temperature on Discharge Protection		normal	operated	status
21	Over voltage Alarm		normal	operated	status
22	Over voltage Protection		normal	operated	status
23	Under voltage Alarm		normal	operated	status
24	Over voltage Protection		normal	operated	status

Signal list: Fire detection_ system

S.No.	Signal Name	Device	states	
1	Smoke sensor 1 state	Fiel Alarm Panel	normal	operated
2	Smoke sensor 2 state	Fiel Alarm Panel	normal	operated
3	Smoke sensor 3 state	Fiel Alarm Panel	normal	operated
4	…….	Fiel Alarm Panel	normal	operated
5	…..	Fiel Alarm Panel	normal	operated
6	Smoke sensor n state	Fiel Alarm Panel	normal	operated
7	Manual Call point 1 state	Fiel Alarm Panel	normal	operated
8	Manual Call point 2 state	Fiel Alarm Panel	normal	operated
9	Manual Call point 3 state	Fiel Alarm Panel	normal	operated
10	….	Fiel Alarm Panel	normal	operated
11	…	Fiel Alarm Panel	normal	operated
12	Manual Call point n state	Fiel Alarm Panel	normal	operated

Please note : Auxilairy supply healthiness of the Fire alarm system shall be monitored from the MCB's of Battery charger.

Auto-Mode Signals

S.No.	Signal name	data type	states	
1	Auto control mode enable cmd	SCO		
2	Auto control mode disable cmd	SCO		
3	Control mode status	SPI	manual	Auto
4	Auto close cmd status	SPI	INITIATED	COMPLETE

Power Quality Meter signal list			
S.No	**Signal Name**	**data type**	**Unit**
1	Crest Factor A PHASE	Short Measured Floating Point	
2	Crest Factor B_PHASE	Short Measured Floating Point	
3	Crest Factor C_PHASE	Short Measured Floating Point	
4	Crest Factor N_PHASE	Short Measured Floating Point	
5	CURRENT DISTURBANCE	Short Measured Floating Point	
6	CURRENT UNBALANCE WORST	Short Measured Floating Point	
7	K FACTOR R_PHASE	Short Measured Floating Point	
8	K FACTOR Y_PHASE	Short Measured Floating Point	
9	K FACTOR B_PHASE	Short Measured Floating Point	
10	%THD CURRENT R_phase	Short Measured Floating Point	%
11	%THD CURRENT Y_phase	Short Measured Floating Point	%
12	%THD CURRENT B_phase	Short Measured Floating Point	%
13	%THD CURRENT NEUTRAL	Short Measured Floating Point	%
14	%THD VOLTAGE R_N	Short Measured Floating Point	%
15	%THD VOLTAGE Y_N	Short Measured Floating Point	%
16	%THD VOLTAGE B**_N**	Short Measured Floating Point	%
17	VOLTAGE DISTURBANCE	Short Measured Floating Point	
18	VOLTAGE DISTURBANCE WORST	Short Measured Floating Point	

ANNEXURE- C – SPARES REQUIREMENT

Sl.No	EQUIPMENT	QTY	UOM
1	CPU Module	1 no's of Each type	nos
2	DI modules	10% of total no's of DI channels in RTU BOM	nos
3	DO module	10% of total no's of DO channels in RTU BOM	nos
4	AI Module	10% of total no's of AI channels in RTU BOM	nos
5	Rack (Chassis) /IO Extension module	1	nos
6	Ethernet Switch	1 no's of Each type	nos
7	Ethernet Switch, 28 ports 8 TX (FE) 16 FX (FE) Multimode LC type ,2FX (GbE) ,2TX GbE, 48V DC, 48V DC ,Dual Redundant Power supply	1	nos
8	DC to DC Converter (220 V to 48 V DC)	1	nos
9	GPS receiver System(along with antenna & Cable)	1	nos
10	Interposing contactors 48VDC	10% of total no. of Interposing relays in RTU BOQ	nos
11	OFC Patch Cables	20 % of each type (length) in RTU/SAS BOQ	nos
12	Prefab CAT 6A patch cables (5 Mtr Each)	5	nos
13	FLUKE –17B/117 True RMS multimeter	1	nos
14	FO Attenuation Tester	1	nos

ANNEXURE- D – COMMUNICATION ARCHITECTURE

Substation Automation System Architecture Specifications

1.1	SAS Architecture	Shall be a distributed architecture with Bay Oriented Monitoring, protection & control and shall be as per latest IEC 61850 Standard. Functions should be Object oriented and shall be modeled as closed as possible to the processes. Substation automation system shall comply with IEC 62439-3 Clause4 for Parallel Redundancy Protocol (PRP) based on the redundancy of the Ethernet Network Infrastructure.i.e dual Ports in IED's/BCU's, Dual PRP LAN(FO/RJ45), Ethernet Switch Redundancy, RTU CPU /port redundancy.
1.2	QoS (Traffic Priority)	Use IEEE 802.1p Sampled Values (Highest) GOOSE(High) MMS(medium) Engineering (Low)
1.3	Cybersecurity	All the devices shall be as per latest revisions of IEC 62351 and ISA 62443 for Protocol security and system hardening.
1.4	Ring redundancy	Switches with HSR capabilities shall be used to create redundant ring architecture ensuring zero frame loss during Switch failure.
1.5	Network topology	Separate physical or logical networks for process bus,Station bus and System BUS.
1.6	Time synchronisation	IEEE-1588 PTP in accordance with IEC 61850-9-3.Grand master clock + Transparent /boundary clocks (IED's , RTU Ethernet Switches)
1.7	GOOSE Latency	End to End latency <4ms shall be validated during FAT/SAT.
1.8	Factory Acceptance Test	PRP/HSR Fail over tests, PTP accuracy tests, security scans.
1.9	Multifunctional meter	• MFM's shall be connected in a daisy chain using Screened Shielded twisted pair cable. Not more than 8 MFM's shall be connected in

		a single loop. • Polling by RTU-A and RTU –B (hot –standby redundancy.
1.10	Power Quality Meters	• Shall be connected to station bus Ethernet Network in separate VLAN. Polling by RTU-A and RTU –B (hot –standby redundancy.
1.11	Smoke detector system	• Shall be integrated to RTU through modbus RTU communication . Polling by RTU-A and RTU –B (hot –standby redundancy.
1.12	Grid DC Monitoring System.	• Battery charger /battery Bank status signals and measured parameters as per standard signal list (refer annexure A) shall be integrated through a Modbus RTU/TCP supported device .The device shall be BRPL approved/ IEC/IS compliant.
1.13	Health status /Watchdog	Watch dog contacts of All the ethernet switches, GPS etc shall be hardwired to IO's of RTU/IED.
1.14	PRP	Two completely independent LAN's : LAN A and LAN B. IP schema for the Station communication shall be provided during Project engineering stage. PRP supervisory frames shall be used for link monitoring. Bidder shall submit necessary compliance certificate for PRP from Statutory authority/agency such as KEMA, UCA, CPRI etc
1.15	GOOSE Filtering	IGMP snooping feature in the Ethernet switches shall be enabled.
1.16	**HMI Workstation (as per tendered BOQ)** .	
1.17	HMI specifications	For real time monitoring, logging and reporting of status, events, alarms, trends, Automatic Disturbance records handling and storage.Shall

		conform to IEC 61850.Shall Support redundant client/server architecture.Software licences shall be perpetual covering OS, runtime,development, historian, driver packages, Hot standby redundancy etc.
1.18	Hardware specifications	(i) Industrial grade PC with i7 processor or equivalent industrial grade processor. (ii) RAM 16 GB or higher (iii) Storage SSD 1 TB or higher (iv) Display 21'' to 24''. (v) Dual Ethernet ports for redundant networks. (vi) Dual Power supply: 220 V DC/48V DC as per the site requirements. (vii) Shall support RAID-1/RAID -5 redundancy. (viii) Hardened for Cybersecurity. RBAC, (ix) Secure Engineering work station. (x) Events shall be time tagged with <1ms accuracy. (xi) Time synch through NTP/SNTP/PTP from station GPS. (xii) Shall support PRP,HSR etc
1.19	Local analytics, asset management	Local fault anaytics, anomaly detection, firmware management, configuration management.

SAS ARCHITECTURE :-
66/11kV GIS SUBSTATION

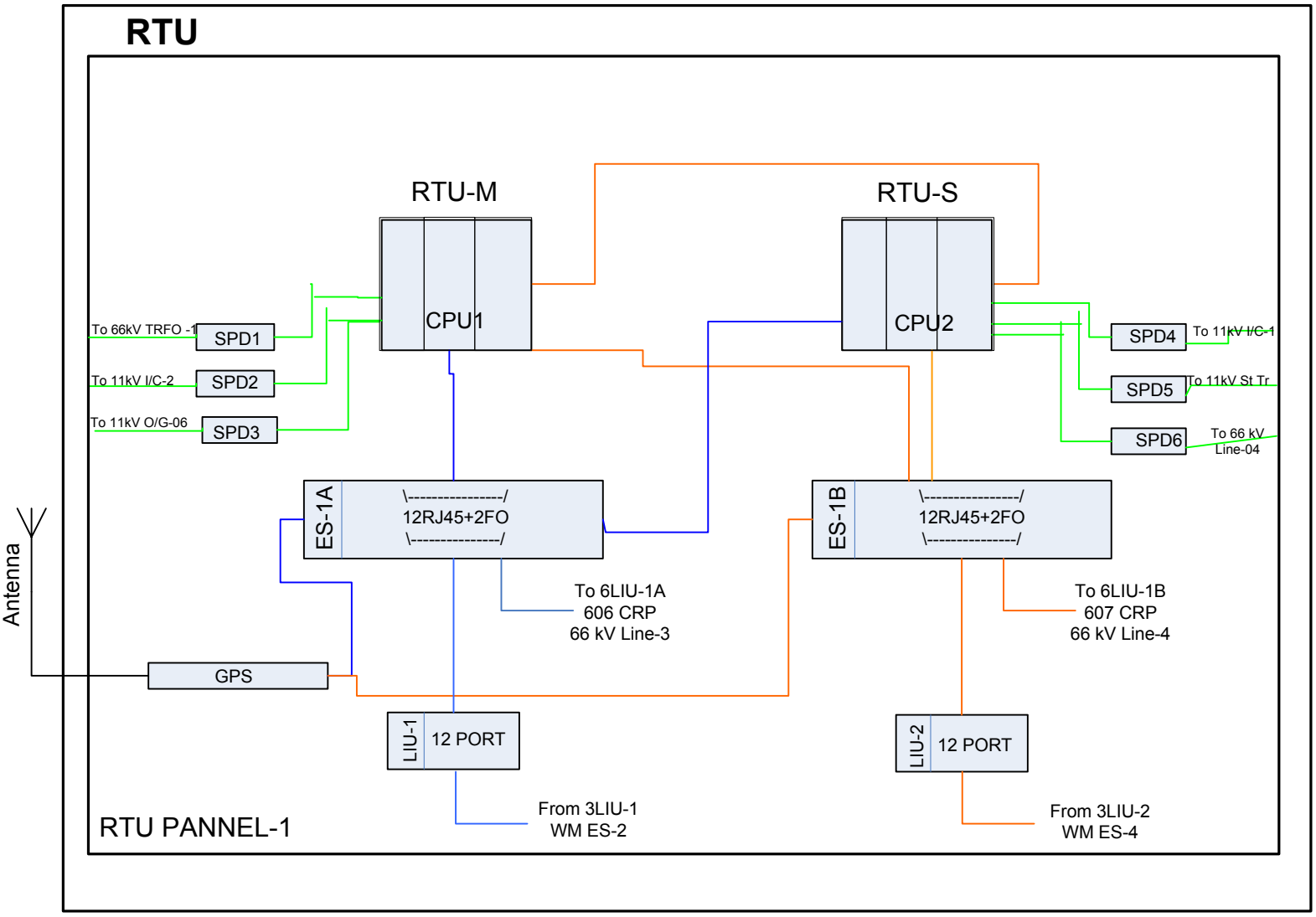

SAS NETWORK ARCHITECTURE

66kV

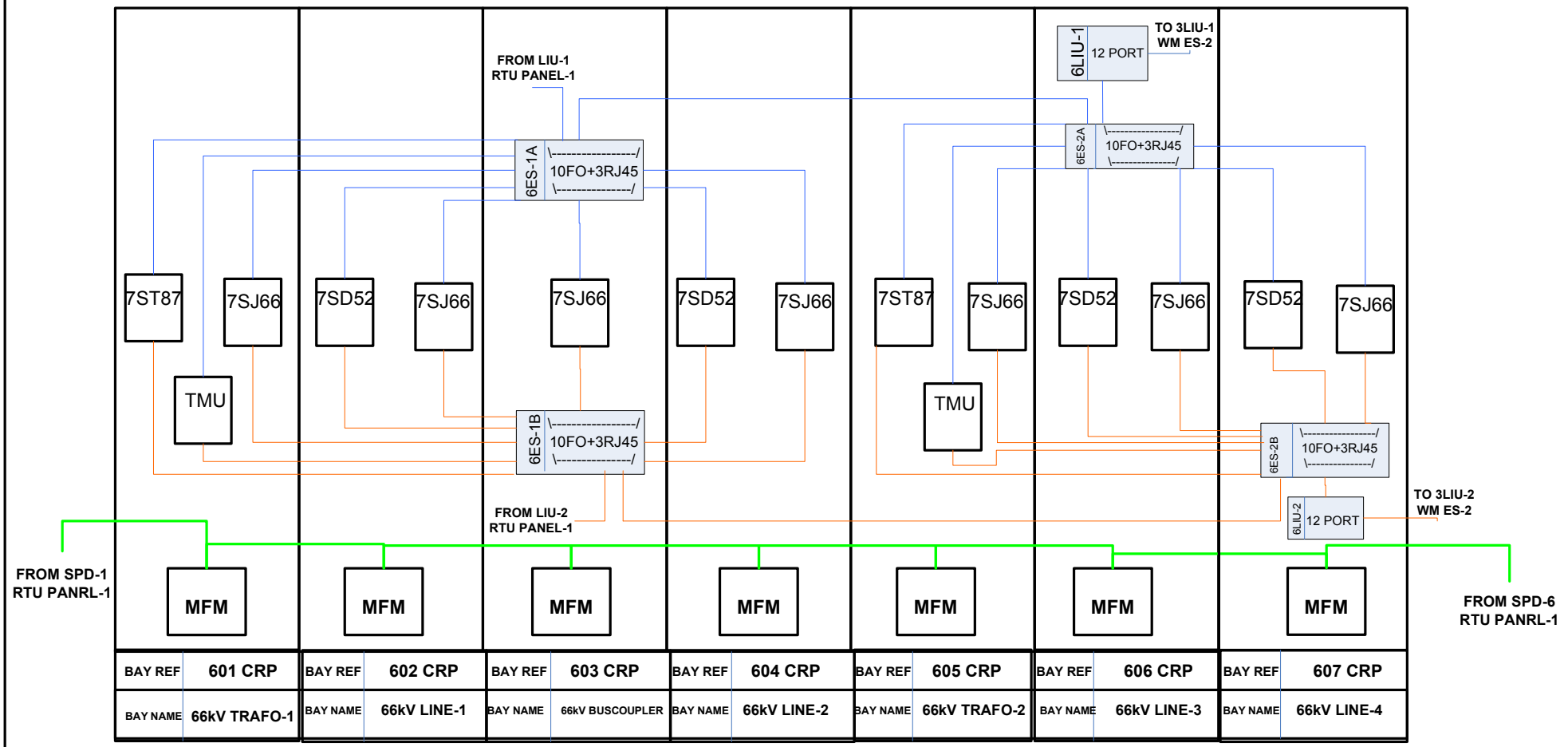

SAS ARCHITECTURE :-
66/11kV GIS SUBSTATION,

11kV

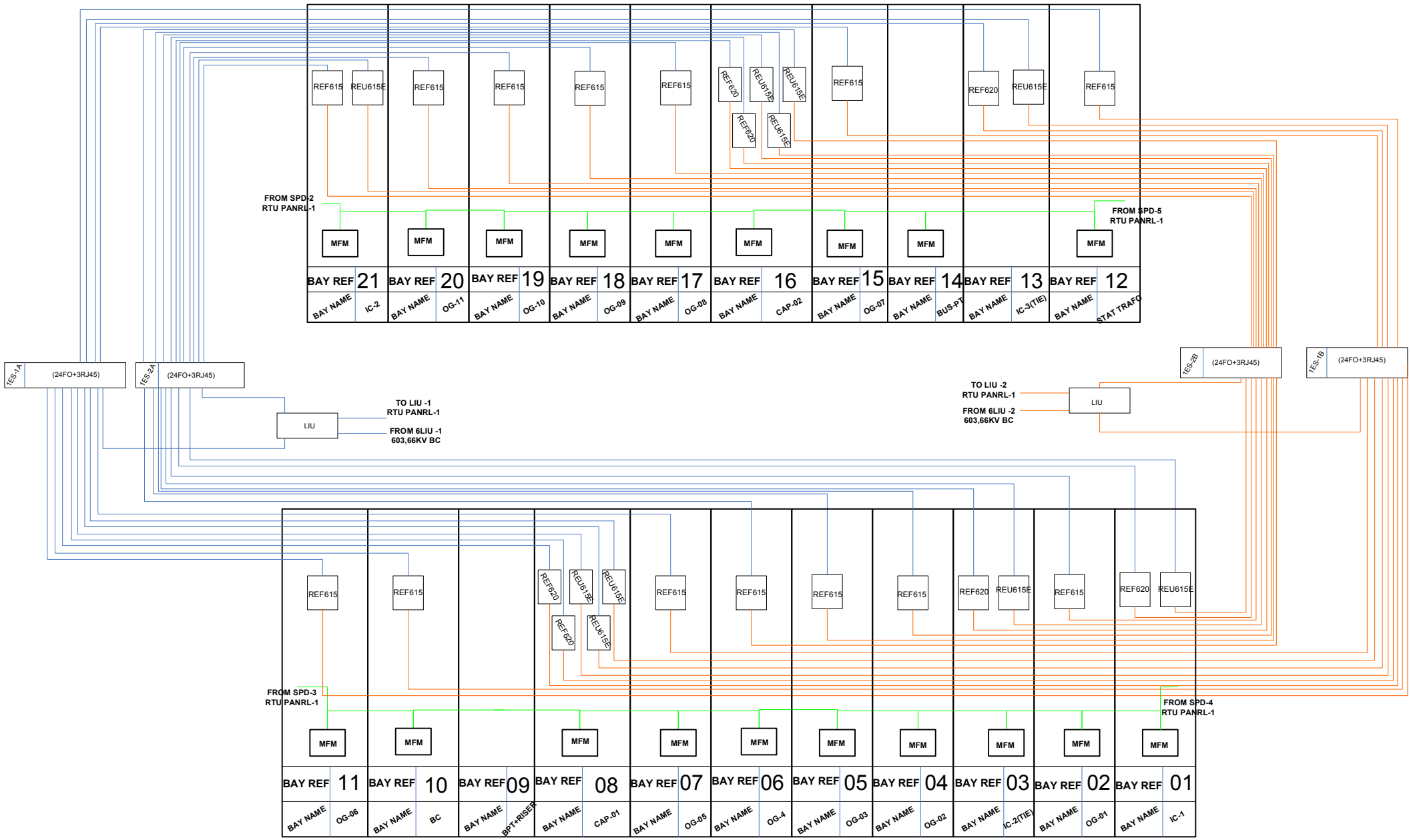

Annexure E

SCADA ADAPTATION AND INTEGRATION SERVICES.

Scope of Work includes:

1.1 Erection of RTU Panel

a) Rigging/lifting of RTU Panel shall be carried out only by skilled personals. OEM user manual shipped along with RTU to be referred for the same.

b) RTU shall have a 1000 mm of free space on all the sides of installation area for ease in access to RTU for day to day maintenance activities.

c) RTU base frame shall be fastened to ground using appropriate non corrosive brass fasteners and nuts.

1.2 Mounting of Switch Panel

a) Ensure that the Wall mounted panel has at least 500 mm of free space on all sides.

b) Panel shall be fastened to ground using appropriate non corrosive brass fasteners and nuts.

1.3 Installation of Cable trays.

a) Cable trays must be appropriately supported using non corrosive high quality MS angle supports/tie rods. The type of support requirement shall be as per site requirements.

b) If the cable trays are overfilled beyond the certain criteria established by NEC, another cable tray system shall be added above or below the existing cable tray.

c) To ensure safety cable tray system shall be grounded before the cables are energized.

d) Cable trays must be labeled with the cables they contain.

e) The strength of the cable tray, the cable tray loading and the space between the supports, all the factors has to be taken care of during pre-installation planning of cable systems.

f) NEC guidelines for the safe installation of Cable trays shall be referred.

1.4 Laying of Control Cables between Control and relay Panels to RTU Panel

a) Cable shall be laid in cable trays/trench as per the cable schedule.

b) Cable Schedule shall be provided which will define the two end points of the cable and type of cable. It is the bidder's responsibility to survey the site and make a schedule to lay the cable through the shortest path available.

c) Extra cable if laid by the contractor by mistake shall be be removed by contractor at no extra cost to BRPL.

d) Cable shall be labeled at both the end of terminations and at 5 meter intervals by punching aluminum tags and tying suitable by nylon ties, which shall be arranged by contractor at his cost.

e) All the cables laid on trays shall be neatly dressed up and clamped up or tied to the tray.

f) At least 300 mm clearance shall be provided between LT Power cable/Control cable LT Control Cable and LT instrumentation cable.

g) Civil work including excavations, brick work, plastering etc wheresoever's required shall be carried out by contractor.

h) After cable laying excavated area shall be refilled and restored by the contractor. Removal of debris/related material shall be under contractors scope.

i) The Quantities in BOQ are tentative only and actual quantities of cable laid, civil work etc to be measured and recorded after joint inspection with BRPL Site Engineer In-charge and contractor.

1.5 Laying of RS 485 cable from Multifunctional meters to RTU Panel.

a) All the devices in a communication bus shall be connected in a daisy chain fashion. Any other method of connecting the devices is not recommended as it might cause communication issues or system failure.

b) Maximum length of the cable shall not be longer than 800m.

c) In order to avoid signal reflections it is recommended to connect 120Ω terminating resistance in the last device in the chain.

d) Cable shield shall be grounded at one side only, either at RTU end or at MFM (C&R Panel) end.

1.6 Laying, Crimping and tagging of CAT 6 Cables.

a) Laying of cables near the Power cables or any source of EMI shall be avoided.

b) Cable length shall not exceed 100 Mtrs.

c) Network analyzer shall be use to check the network interference if the cable is laid near Power cables/ EMI Source.

d) CAT6 cables shall be crimped using TIA568-B standard.

1.7 Laying ,Splicing and termination of FO Cables.

a) All fibers shall be spliced and terminated in optical Fiber Patch Panel.

b) For FO patch Cable laid in trench/ tray, each Patch cable shall be contained in 16mm GI flexible conduit/ HDPE pipe.

c) The quality of the splice connection shall be tested thoroughly by highly precise insertion loss meter or an OTDR meter. The values shall be in permissible range and the report for the same shall be submitted.

d) Laying of FO Cable shall confirm to manufacturer's recommendation covering the mechanical constraints such as the maximum bending radius.

e) Machine Printed label strips shall be used for marking port of the LIU Panel

1.8 Glanding and tagging of Control Cables

a) Installation of cable glands shall be carried out by a competent and skilled personal.

b) Cable glands shall not be installed /dismantled whilst the circuit is live.

c) Unused Cable gland holes shall be covered with proper size and quality grommets.

1.9 Ferruling, tagging and termination of Control cables.

a. Printed ferrules (white pvc sleeves with black character markings) to be used for identifying cables/cores.

b. Printed ferrules shall be covered with transparent heat shrink tubes.

c. Printed, corrosion resistant Mettalic tags (high quality aluminium thickness 0.5mm-0.8mm) shall be used for tagging the control cables, armoured communication cables etc. Markings shall be made using laser etching, engraving and the same shall be durable and resistant to fading etc.Edges shall be smoothened to avoid cuts.

d. Printed stickers shall be used for identifying the OFC Patch cables inside the Control panels/Swicthgear panels etc.



Sample cable tag

2.0 Factory Acceptance Test

a. OEM/Bidder Shall submit the detailed FAT Procedure.

b. FAT at OEM factory/Work shop for RTU, SAS equipments, Cables etc shall be organized and arranged by Bidder .The number of BRPL Personals attending the FAT shall be decided by the BRPL Project in-charge, the same depends upon the duration and Quantum of inspection.

c. All the arrangements for Factory inspection Tavel, local conveyance, boarding lodging shall be under bidder scope.

d. The bidder shall arrange the type tests certificates for the following tests.

e. During FAT the Entire substation automation system including complete control and protection system to be supplied under project scope shall be tested for complete functionality and configuration in factory itself.

3.0 Erection, testing and commissioning

Bidder shall deploy a skilled manpower from OEM for RTU/SAS installation, configuration, Commissioning and testing activities.

a. Preparation of Cable Schedule, IO mapping schedule, SAS Architecture, Site Acceptance Test check list shall be in the scope of Bidder.

b. Cable schedule , IO mapping schedule , SAS Architecture and other relevant documents related to ET& C work shall be duly approved by BRPL Site-incharge.

c. Integration of Protection Relays/ IED's, TMU etc with RTU using IEC 61850 Protocol. Note: Relay .icd/.cid files along with signal mapping details shall be provided by protection team deployed at site..

d. Integration of Multifunctional meters, Fire alarm Panel, Battery charger , Battery bank (BMS System), Power Quality meter with RTU using modbus RTU /TCP IP Protocol .The mapping details and required manuals for the same shall be arranged by BRPL Project Engineer-incharge. However the same shall be in Bidders scope for Turnkey Projects.

e. Hardwired interfacing of DI, DO AI Signals to RTU as per IO mapping schedule.

f. Testing of all the signals from Master Contol Centre. The same shall be co-ordinated , scheduled and witnessed by BRPL Site In charge

4.0 Quality & Safety Requirements.

a. The OEM shall submit a certificate in respect of compliance of safety guidelines.

b. OEM shall submit the user safety installation manuals of all the electronic/Electric items in RTU Panel/ Ethernet Switch Panels.

c. The safety ground shall be isolated from the signal ground and shall be connected to the ground network. Safety ground shall be a copper bus bar. The contractor shall connect the panel's safety ground to the grid grounding network. Separate grounding (2Pits) is created for communication equipments and Signal ground shall be connected to the communication equipment signal ground

d. **Antistatic mat** shall be installed in front of RTU Panel to protect the RTU/electronic modules from Static discharges during commissioning and normal day to day maintenance activities.

5.0 RTU SOFTWARE REQUIREMENTS

a. RTU Software shall be upward compatible with all the versions of Windows Operation system.

b. All the necessary licenses (PLC/Archive/HMI etc) shall be in scope of supply.

c. RTU software shall be supplied in Full/Complete version.

d. RTU Software setup /licenses shall be provided in a flash drive/Hard lock dongle.

e. The database configuration file must be upload able/ downloadable from/to RTU.

f. The RTU software and database generation should be sized to accommodate for additional 50% of the basic I/O count without requiring software or database regeneration or License.

g. RTU shall have capability of Integration upto 120 IED's through IEC 61850 client server protocol.

h. RTU shall be accessible through Remote through Web browser over secure connection (https/SSL).

i. RTU shall have the feature of remote diagnostics, downloading of System security events and alarms logs through Remote/Syslog server.

j. RTU shall have the feature to analyze the data packets in/out through Ethernet and serial pots of RTU.

k. The software shall be able to configure IED's, add additional variables, modify interlocks for additional Bays in Future.

l. HMI System (if included in Tendered BOQ) shall include the software tools for the picture editing, engineering and system configuration and all the required necessary standard libraries.

6.0 Transport/logistics of Material

a) Loading and unloading of Material at Site and BRPL store shall be under bidders scope.

b) Loading and unloading of material shall be done by a certified, specialized

and skilled manpower/agency.

c) Watch & ward of Material (for BRPL Unmanned Grid Stations) after delivery shall be under bidders scope.

7.0 Documentation

Following documents shall be submitted for BRPL's approval during detailed engineering

a. System Architecture Drawing

b. Hardware Specifications.

c. Functional Design Specification documents.

Following documents shall be submitted during the course of Project execution.

a. Approved System Architecture.

b. Approved RTU drawings.

c. Cable Schedule

d. IO signal mapping Details.

e. List of labels/tags.

f. Product manuals/operator manuals.

g. Assembly drawings.

h. SAT (Site Acceptance Test) procedure.

8.0 Training

a. The classroom training shall be provided to all the designated personals of BRPL for 4-5 days at OEM Factory /Facility.

b. The cost of travel, transportation, and per diem for the trainees shall be borne by BRPL.

c. Suitable training manuals/handouts shall be provided to all the trainees.

d. Training Shall be provided on configuration, installation, commissioning aspects of RTU, DCU,BCU and Numerical Relay – BCPU.All Expenses (Air & Local Travel, boarding and Lodging for 4 to 5 persons) at factory/training center(5 days) comes under Bidders scope

TECHNICAL SPECIFICATION

FOR

11KV AUTO SWITCHED CAPACITOR BANK INDOOR / OUTDOOR TYPE

INDEX

1.0 SCOPE OF SUPPLY 3
2.0 CODES & STANDARDS 3
3.0 SERVICE CONDITIONS 4
4.0 CAPACITOR BANK 4
5.0 SINGLE PHASE CAPACITOR UNIT 6
6.0 VACUUM CONTACTOR/SWITCH FOR AUTO SWITCHING 7
7.0 SERIES REACTOR 7
8.0 ISOLATOR 8
9.0 PERFORMANCE 8
10.0 LABELS & FINISH 8
11.0 INSPECTION & TESTING 9
12.0 DEVIATIONS 9
13.0 MANDATORY SPARES 9
14.0 GUARANTEED TECHNICAL PARTICULARS 10

1.0 SCOPE OF SUPPLY

a. This specification covers the design, manufacturing, testing, supply, erection & commissioning of 7.2 MVAR (First step of 0.9 MVAR , Second and third step of 1.8 MVAR and last step shall be of 2.7MVAR), 11KV three phase outdoor Auto Switched Capacitor Bank with bus bar arrangement for outdoor installation including 0.2% series reactors, capacitor switch/contactor, Isolator cum earth switch, HT fuses, RVT and all necessary equipment for auto switching.
b. This specification shall be used in conjunction with all specifications, data sheets, single line diagrams, and other drawings attached to the tender.

2.0 CODES & STANDARDS

Indian Electricity Rules	
Indian electricity act	
CBIP manual	
IS 13925 part 1,2 & 3	Shunt capacitors above rated voltage 1000v
IS 11298 part 3	Plastic films for capacitors
IS 9921-1985	Isolator
IS 5553	Series reactor
IS 2099	Bushings for voltages above 1000v
IS 12672	Internal fuses & disconnector for shunt capacitors
IS 3156 -3	Residual voltage Transformer
IS 13067	Impregnant for power capacitors
IS5	Color of mixed paints
IS 15086	Surge arrestor
IS 3070 (Pt 3)	Surge arrestor
IS 2629	Recommended practice for Hot dip galvanizing of steel
IS 4759	Hot dip Zinc coating on Steel structures and other allied products
IEC 60871	Shunt capacitors for AC power Systems
IEC 61000	Automatic Power Factor Controller
IS 9920-2002	Vacuum Contactors/Capacitor Switch

In the event of direct conflict between various order documents, the precedence of authority of documents shall be as follows -

i. Guaranteed Technical Particulars (GTP)
ii. Specification including applicable codes, standards
iii. Approved Vendor Drawings
iv. Other documents

3.0 SERVICE CONDITIONS

3.1	Max Ambient Temperature	50 deg C
3.2	Max Daily average ambient temp	40 deg C
3.3	Min Ambient Temp	0 deg C
3.4	Maximum Humidity	95%
3.5	Minimum Humidity	10%
3.6	Maximum annual rainfall	750 mm
3.7	Average no of rainy days per annum	60
3.8	Rainy months	June to Oct
3.9	Altitude above MSL	300 M
3.10	Seismic Zone	IV

4.0 CAPACITOR BANK

4.1	Capacitor Scheme	3 Phase, 7.2MVAR @ 11KV, open delta
4.2	Switching	Total steps shall be -First step of 0.9 MVAR , Second and third step of 1.8 MVAR and last step shall be of 2.7MVAR. Auto switching will be controlled by APFC relay mounted in 11kV Capacitor Bank.
4.3	Service location	Suitable for outdoor use
4.4	Residual voltage transformer	Each RVT in each step shall be connected to NDR provided on the switchgear panel.
4.5	Voltage ration	11Kv/√3:110√3:190V
4.6	HT capacitor bank assembly	a. Individual single phase capacitor units mounted on steel rack & connected externally by sleeved flexible copper connectors to form double star. b. Sleeves to be Red, Yellow, Blue, & Black in colour.
4.7	Interchangeability	Between various single phase capacitor units without disturbing other units
4.8	Capacitor bank enclosure	For enclosing complete capacitor bank including capacitor units, Reactors, flexible copper connectors, RVT, terminal bus bar. Enclosures shall be provided with IP65 protection.
4.9	Enclosure size	Shall fit all the equipments and as per the site requirement.
4.10	Enclosure mounting	Free standing on RCC plinth / slab
4.11	Enclosure Material	Ms Steel
4.12	Degree of enclosure protection	IP65
4.13	Enclosure	Ms Steel, Vermin and dust proof

4.14	Bus bar for HV cable termination	One for each phase mounted on porcelain or epoxy insulators
4.15	Bus bar material	Tinned copper, sized for 150% of rated current and rated fault duty
4.16	Bus bar arrangement	Suitable for Indoor termination of HT cable size up to 2 x 3C x 300sqmm for each phase
4.17	Residual voltage transformer	For Indoor application
a	Voltage class	Suitable for system rated voltage
b	Ratio	11Kv/√3:110√3:190V
c	Accuracy class	0.5 / 3P
d	Burden	50VA / 50VA
e	Material	Cast resin
f	Mounting	Inside panel
g	Terminal marking	To be provided on RVT enclosure
h	Primary terminals	Brought out of RVT enclosure through insulator bushing of voltage class equal to rated capacitor voltage
i	Secondary terminals	Brought out in a terminal box mounted on RVT enclosure
4.18	External hardware for HT capacitor bank enclosure (nuts/bolts/handles)	Stainless steel
4.19	Series Reactor	Each Capacitor bank step shall be provided with suitable series air cored reactor.
4.20	Rated current	The reactor shall be rated for 130% continuous current. The short time rating shall be 16 times the normal current for 2 sec.
4.21	Sizing	Reactors shall be suitably designed to limit overloading due to presence of harmonics in the system as per recommendations of IS13925. Design calculation shall be submitted at the time of drawing approval
4.22	GA drawing	Manufacturer shall submit the G.A. Drawings for Capacitor Bank with mounting of series reactor inside the bank.

5.0 SINGLE PHASE CAPACITOR UNIT

5.1	Single phase capacitor unit	Totally enclosed, leak proof, dust proof suitable for outdoor application, comprising individual capacitor elements connected in series & parallel groups. Continuous operating current shall be minimum 1.43 times to max. 1.65 times as per clause 6.2 of IS 13925.
5.2	Capacitor unit size	Preferred size is 200kVAR, however higher unit sizes may be considered if the space availability at site is scarce
5.3	Capacitor element	Developed from alternate layers of conducting metal foil & dielectric film
5.4	Conducting layer material	Aluminum foil
5.5	Dielectric material	Hazy Poly Propylene (APP), Double layer minimum
5.6	Cooling	Natural air
5.7	Impregnating liquid	Non PCB(Poly chlorinated Biphenyl), less toxic, with low bio-accumulation and bio-degradable liquid filled under vacuum
5.8	Capacitor unit enclosure	Fabricated from sheet metal CRCA steel of thickness 2mm minimum, hermetically sealed & hydraulically tested
5.9	Discharge device	For each single phase capacitor unit
5.10	Internal fuse	Metal alloy fuse of suitable rating as per IS 12672 should be provided for each capacitor element. Residue of fuse after operation shall not contaminate the impregnating liquid. The fuse shall not deteriorate when subjected to inrush current. The fuse assembly shall be distinct and separate from the element packs such that it shall isolate only the faulty element packs and the operation of a fuse under worst condition does not affect the other healthy elements.
5.11	Surge arrestor	Gap less metal oxide type
5.12	Rated voltage	9kV
5.13	Maximum continuous operating voltage	7.65kV
5.14	Discharge current	5kA
5.15	Spare capacitor unit	One capacitor unit for each bank

6.0 VACUUM CONTACTOR/SWITCH FOR AUTO SWITCHING

6.1	Rated Voltages	12 KV
6.2	Rated Continuous Current	200% of full load current (minimum) of unit being switched
6.3	Rated Capacitor Switching Current	150% of full load current (minimum) of unit being switched
6.4	Frequency	50 Hz
6.5	Control supply	230 V Single phase AC supply
6.6	Type	Vacuum
6.7	Installation	Outdoor
6.8	Mechanical Endurance	100000 operations (minimum)
6.9	Electrical Endurance	100000 electrical operations at rated capacitive switching current (minimum)
6.10	Mechanical Indicator	To show number of operations
6.11	Trip lever	For emergency tripping operation
6.12	Closing lever	For capacitor bank discharging
6.13	Make	ABB/EPCOS/CGL/CONQUERENT

7.0 SERIES REACTOR

7.1	Series Reactor	Shall be provided fulfilling following requirement, a. Parallel switching of one bank with another two bank in service b. Suitable design calculation shall be submitted at the time of drawing approval c. Reactors shall be suitably designed to limit inrush current with proper calculation to be submitted to BYPL. d. The series reactor shall be designed to suit the final capacity of Capacitor Bank e. The manufacturer shall submit the G.A. Drawings for Capacitor Bank with mounting of series reactor inside the bank
7.2	Series reactor continuous rating	0.2% of capacitor bank rating
7.3	Series reactor rated voltage	Same as capacitor bank rated voltage
7.4	Series reactor rated frequency	50Hz
7.5	Series reactor single phase unit connections	Connected between single phase capacitor units and neutral star point
7.6	Series reactor type	Dry type with air natural cooling
7.7	Series reactor power frequency withstand voltage	28 KV
7.8	Series reactor lightening impulse withstand voltage	75 KV

7.9	Series reactor short time withstand current rating for 3 seconds	16 times capacitor rated current at 130% rated voltage

8.0 ISOLATOR

8.1	Installation	Indoor
8.2	Rated Voltage	11 KV
8.3	Type	Single throw, Double break, off load type, triple pole and horizontal gang operated with earth switch. Mechanical interlock should be provided between isolator and earth switch.
8.4	Operation Type	Motarized

9.0 PERFORMANCE

9.1	Over voltage operation	as per IS 13925 part1
9.2	Over current operation	as per IS 13925 part1
9.3	Operating temperature category	+5/C as per IS 13925 part1
9.4	Discharge characteristic as per IS 13925 part1	a. Each capacitor single phase unit residual voltage after disconnection from mains supply shall be 50V (maximum) within 10 minutes b. Capacitor bank residual voltage after disconnection from mains supply shall be 50V (maximum) within 10 minutes
9.5	Power loss and tangent of Loss angle (tan δ)	To be specified by manufacturer as per IS 13925 part1

10.0 LABELS & FINISH

10.1	Rating plate for HT Capacitor bank	
10.2	Material	Anodized aluminum 16SWG
10.3	Background	Satin silver
10.4	Letters, diagram & border	Black
10.5	Process	Etching
10.6	Bank Name plate details	Mfg name, Mfg Sr. No., Month & year of Mfg, equipment type, total output rating, Bank Capacitance in µF, Bank watt losses, Owner name & order number, Temp. category, connection diagram, Guarantee period.
10.7	Rating plate for each single phase capacitor unit	Anodized aluminum with white character on black background and details as per clause no 10.1 of IS 13925
10.8	Unit Name plate details	Mfg name, Mfg Sr. No., Month & year of Mfg, equipment type, total output rating, unit Capacitance in µF, unit watt losses, Temp. category, Discharge device rating, connection diagram, Owner name & order number, Guarantee period, unit wt. in kG,

10.9	Danger plate on front & rear side of enclosure	Anodized aluminum with white letters on red background
10.10	Painting - Capacitor single phase unit	
10.11	Surface preparation	Shot blasting or chemical 7 tank process
10.12	External finish	Powder coated pure-polyester base Mat finish, shade– Siemens Gray RAL 7032, uniform thickness 50 microns minimum
10.13	Painting frame enclosure	a. Chemical 7 tank process for surface b. Hot dipped Galvanized with uniform thickness 65 microns minimum as per IS 2629 and 4759.

11.0 INSPECTION & TESTING

11.1	Type test	Equipment of type tested quality only, type test certificate to be submitted along with offer.
11.2	Routine test	As per relevant Indian standard
11.3	Acceptance test as per IS	To be performed in presence of Owner at manufacturer works, as per relevant Indian standard along with BOM.

12.0 DEVIATIONS

Deviations from this Specification shall be stated in writing with the tender by reference to the Specification clause/GTP/Drawing and a description of the alternative offer. In absence of such a statement, it will be assumed that the bidder complies fully with this specification. No deviation will be acceptable post order.

13.0 MANDATORY SPARES

Following spares have to be provided with capacitor banks

a. Capacitor Units – 2 nos
b. Series Reactors – 2 nos
c. Vacuum Switch – 2 nos

14.0 GUARANTEED TECHNICAL PARTICULARS

S No.	Description	Data to be filled by bidder
15.1	Manufacturer/ Make	
15.2	Manufacturer equipment type	
15.3	Conformance to service conditions as per specification clause 3.0	
15.4	Conformance to capacitor design requirements as per specification clause no 4.0 to 8.0 – Yes/No	
15.5	Submission of deviation sheet for each specification clause no. – Yes/No	
15.6	Capacitor single phase unit	
15.7	Enclosure sheet metal thickness in mm	
15.8	Hermetic sealing method (pressure welding / gas welding / sealant / if any other pl specify)	
15.9	No. of series group / unit	
15.10	No. of parallel elements / series group	
15.11	No. of APP layers – double / triple	
15.12	Thickness of APP film	
15.13	Thickness of Al foil	
15.14	Maximum voltage stress per APP layer	
15.15	Rated capacitance in micro farad	
15.16	Output at rated system voltage (in KVAR)	
15.17	Rated current in Ampere	
15.18	Overall capacitor bank rating	
15.19	At rated system voltage (in KVAR) (requirement is 7.2MVAR at 11KV)	
15.20	Rated current in Ampere	
15.21	Connectionr? – Yes / No	
15.22	Spare capacitor unit offered? Yes/No.	
15.23	Series Reactor rating details	
15.24	Capacitor bank insulation level	
15.25	Impulse withstand voltage (Kv peak)	
15.26	One minute power frequency withstand voltage (Kv rms)	
15.27	Bus bar cross section in sq mm	

S No.	Description	Data to be filled by bidder
15.28	Bus bar short time withstand capacity in KA for 3 sec	
15.29	Bus bar support insulator make & type	
15.30	Bus bar support insulator voltage class	
15.31	Capacitor unit maximum temperature rise above ambient in Deg Celsius	
15.32	Capacitor unit power loss in kilowatt	
15.33	Capacitor bank total power loss in kilowatt	
15.34	Discharge device type & material	
15.35	Residual voltage transformer for each step	
15.36	Capacitor vacuum switch	
15.37	Switching Capacity	
15.38	Electrical Endurance	
15.39	Mechanical Endurance	
15.40	Isolator	
15.41	Capacitor unit – width x breadth x height	
15.42	Capacitor bank – width x breadth x height	
15.43	Enclosure - width x breadth x height	
15.44	Weight in Kg	
15.45	Capacitor Single Phase Unit	
15.46	Steel enclosure	
15.47	Total assembly	
15.48	Residual voltage Transformer as per clause no 4.18 – Yes / No	
15.49	Conformance to labels & finish as per specification	
15.50	Copy of type test certificate submitted? – Yes / No	
15.51	Submission of GA drawing / documentation	

BSES

Technical Specification

Of

Power Transformer

Specification no – BSES-TS-24-TRPU-R1

Rev:		1
Date:		28 Nov 2025
Prepared by	Amardeep / Alok Mandal	
Reviewed by	Uttam Shukla	
Approved by	Deepti Sharma	

INDEX

RECORD OF REVISION 3
1.0 SCOPE OF SUPPLY 4
2.0 CODES & STANDARDS 4
3.0 MAJOR DESIGN CRITERIA & PARAMETERS OF THE TRANSFORMER 5
4.0 CONSTRUCTION & DESIGN 6
5.0 MINIMUM PROTECTIVE DEVICES ON TRANSFORMER 17
6.0 FITTINGS AND ACCESSORIES ON TRANSFORMER 18
7.0 OLTC 22
8.0 APPROVED MAKE OF COMPONENTS 25
9.0 QUALITY ASSURANCE 27
10.0 PROGRESS REPORTING 28
11.0 INSPECTION & TESTING 28
12.0 PACKING, SHIPPING, HANDLING AND STORAGE 34
13.0 COMMISIONING SUPPORT 35
14.0 TRAINING 35
15.0 DEVIATIONS 35
16.0 DRAWINGS AND DOCUMENTS 35
ANNEXURE-A- SCOPE OF SUPPLY 38
ANNEXURE-B- SERVICE CONDITIONS 39
ANNEXURE-C-TECHNICAL PARTICULARS (DATA BY OWNER) 40
ANNEXURE-D- TECHNICAL SPECIFICATION FOR TRANSFORMER OIL 44
ANNEXURE-E-SPECIFICATION FOR SILICAL GEL BREATHER 46
ANNEXURE-F- MANUFACTURING QUALITY ASSURANCE PLAN 49
ANNEXURE-G-TECHNICALSPECIFICATION OF MATERIAL TRACKING–GPS DEVICE..71
SCHEDULE-A-GUARANTEED TECHNICAL PARTICULARS (DATA BY SELLER).....72
SCHEDULE-B-GUARANTEED TECHNICAL PERTICULARS OF TRANSFORMER OIL.... 81
SCHEDULE-C-RECOMMENDED SPARES (DATA BY SUPPLIER) 83

RECORD OF REVISION

Revision No	Item / clause no.	Nature of Change	Approved By
1	4.2.6.3	Winding insulation material	
1	11.1.4	Winding	
1	Annexure G	Copper conductor finishing	
1	Schedule A	Insulating material	

1.0 SCOPE OF SUPPLY

For scope of supply, refer Annexure A

2.0 CODES & STANDARDS

Material, equipment and methods used in the manufacture of power transformer shall conform to the latest edition of following:

IS 2026	Power Transformers
IS 2026-4	Terminal Marking, tappings and Connections for Power Transformers.
IS:3347	Dimensions for Porcelain Transformer bushing
IS:3637	Gas operated relays
IS:3639	Fitting & Accessories for power transformers
IS:4201	Application guide for CT's
IS:8478	Application guide for On-load tap changer
IS:10028	Code of practice for selection, installation & maintenance of transformers
IS 5561	Electrical Power Connectors
IS 5	Colors for ready mix paints
IS:335	Insulating oil
IS 6272	Industrial cooling fans
IS 12615	Three phase induction motors
IS/IEC 60034	Rotating Electrical Machines. (e.g. For Cooler Fan Motors.)
IS/IEC 60071	Co-ordination of Insulation.
IS 16227/IEC 61869	Current Transformers.
IS 8468/ IEC 60214	On Load Tap Changers
IS2026-7/IEC 60076-7	Loading Guide for Oil-Immersed Power Transformers.
IS 2026-8 /IEC 60076-8	Application Guide for Power Transformers.
IS 2026-10/IEC 60076-10	Determination of Transformer Sound Levels.
IS/IEC 60529	Degrees of Protection Provided by Enclosures (IP Code).
IS/IEC 60947	Low-Voltage Switchgear and Control gear.
IS/IEC 60137	Bushing for alternating voltage above 1000V
IS:1271/IEC 60085	Thermal evaluation and classification of electrical insulation
IEC 60076	Power transformers.
IEC 60156	Method for Determination of the Electric Strength for Insulating Oils.
IEC 60296	Specification for Unused Mineral Insulating Oils for Transformers and Switchgear.
IEC 60445	Basic& Safety principles for man-machine interface, marking and identification, Identification of Equipment Terminals and conductor terminals

BS 148	Determination of Transformer and Reactor Sound Levels.
BS 223	Application Guide for Power Transformers.
BS 2562	Terminal and Tapping Markings for Power Transformers.
	Indian Electricity Rules
	Indian Electricity Act
	CBIP manual

In the event of direct conflict between various order documents, the precedence of authority of documents shall be as follows:

a. Guaranteed Technical Particulars (GTP)
b. This Specification
c. Referenced Standards
d. Approved Vendor Drawings
e. Other documents

3.0 MAJOR DESIGN CRITERIA & PARAMETERS OF THE TRANSFORMER

3.1	Major design criteria	
3.1.1.	Voltage variation on supply side	+ / - 10%
3.1.2	Frequency variation on supply side	+ / - 5%
3.1.2	Transient condition	- 20% or + 10% combined variation of voltage and frequency
3.1.4	Service condition	Refer Annexure C
3.1.5	Insulation level	Refer Annexure C
3.1.6	Short circuit withstand level	Refer Annexure C
3.1.7	Overload capability	Refer Annexure C
3.1.8	Noise level	Refer Annexure C
3.1.9	Radio influence voltage	Refer Annexure C
3.1.10	Harmonic currents	Refer Annexure C
3.1.11	Partial discharge	Refer Annexure C
3.1.12	Parallel operation	Shall be designed to operate in parallel with transformer.
	Major parameters	
	Rating	Refer Annexure C
	Voltage ratio	Refer Annexure C
3.2.3	Vector group	Refer Annexure C
3.2.4	Impedance	Refer Annexure C
3.2.5	Losses	Refer Annexure C
3..2.5.1	No load loss	Refer Annexure C
.3..2.5.2	Load losses at principal tap	Refer Annexure C
3.2.6	Temperature rise top oil	Refer Annexure C
3.2.7	Temperature rise winding	Refer Annexure C
3.2.8	Flux density	Refer Annexure C
3.2.9	Current density	Refer Annexure C
3.2.10	Tappings on HV winding	Refer Annexure C
3.2.11	Design clearances	Refer Annexure C

4.0 CONSTRUCTION & DESIGN

4.1	Type	ONAN/ONAF, Copper wound, three phase, oil immersed with on load tap changer
4.1.1	Essential provision for ONAF cooling	See note 1 of Annexure C
4.1.2	Provision of mounting cooling fan at site in future at service condition.	Required
4.1.3	Provision of replacement of cooling fan at site in future at service condition	Required
4.1.4	Fan guard if fans mounted in future.	Required
4.2	Major parts	
4.2.1	Tank	
4.2.1.1	Material of construction	Robust mild steel plate without pitting and low carbon content
4.2.1.2	Plate thickness	Adequate for meeting the requirements of pressure and vacuum type tests as per CBIP. Test will be conducted on each transformer tank for design validation.
4.2.1.3	Welding features	i) All seams and joints shall be double welded ii) All welding shall be stress relieved for sheet thickness greater than 35 mm iii) All pipes, radiators, stiffeners, welded to the tank shall be welded externally
4.2.1.4	Tank feature	i) Adequate space at bottom for collection of sediments ii) Stiffeners provided for rigidity and Designed to prevent accumulation of water iii) No internal pockets in which gas / air can accumulate iv) No external pockets in which water can lodge v) Tank bottom with welded skid base vi) Tank cover sloped to prevent retention of rain water vii) Minimum disconnection of pipe work and accessories for cover lifting viii) Tanks shall be of a strength to prevent permanent deformation during lifting, jacking, transportation with oil filled ix) Tank to be designed for oil filling under vacuum x) Fitted with lifting lug to lift the tank cover only xi) Manhole of sufficient size required for

		inspection of core and winding xii) Oil level indicator for transportation
4.2.1.5	Flanged type adequately sized inspection cover rectangular in shape required for	i) HV line bushing ii) LV line bushing iii) LV neutral bushing and NCT connection iv) OLTC to winding connection from both sides v) Core assembly ear thing Inspection covers should be provided with jacking screws & handle and shall not weigh more than 25 KG . Overall design shall be in such a way that there shall not be any hindrance/overlapping of some other component, in front of any of the inspection covers.
4.2.1.6	Fittings and accessories on main tank	See under fittings and accessories
4.2.2	Conservator for the main tank	
4.2.2.1	Capacity	Adequate between highest and lowest visible levels to meet the requirement of expansion of oil volume in the transformer and cooling equipment from minimum ambient temperature to 100 °C
4.2.2.2	Conservator oil preservation system	By flexible rubber bag (air cell) placed inside conservator
4.2.2.3	Air cell material	Special type of fabric coated with special grade nitrile rubber, outer surface oil resistant and inner surface ozone resistant
4.2.2.4	Conservator features	i) Conservator shall be bolted into position so that it can be removed for cleaning / other maintenance purposes ii) Main pipe from tank shall project about 20 mm above conservator bottom for creating a sump for collection of impurities iii) Conservator minimum oil level corresponding to minimum temperature shall be well above the sump level iv) It shall be possible to remove and Replace the air cell if required v) Conservator to main tank piping shall be supported at minimum two points.
4.2.2.5	Fittings and accessories on main tank conservator	i) Prismatic oil gauge with NORMAL, MINIMUM and MAXIMUM marking. ii) End cover. iii) Oil filling hole with cap iv) Magnetic oil gauge with LOW LEVEL Alarm contact. v) Silica Gel dehydrating breather with Oil seal and dust filter with clear acrylic single piece clearly transparent cover resistant to UV

		rays. vi) Drain cum filling valve (gate valve) with locking rod and position Indicator made of Brass, 25 mm with Cover plate. vii) Shut off valve (gate valve) with position indicator made of Brass Located before and after Buccholz relay, 80 mm. viii) Flange for breather connection. ix) Air release valve on conservator (gate valve) made of Brass, 25 mm with cover plate x) Air release plug as required
4.2.2.6	Essential provision for mounting of conservator	Conservator to be mounted in such a manner that the top cover of the transformer can be lifted without disturbing the conservator
4.2.2.7	Essential provision for breather	i) Breather body should be Aluminum pressure die casted, shot blasted and power coated. ii) Container and oil cup should be 143R grade UV resistant polycarbonate. iii) All gaskets should be of nitrile cork rubber. iv) Breather should be flanged type not threaded type v) Breather piping shall not have any valve placed in between vi) Breather piping from conservator shall be supported in such a manner that the maximum unsupported length of the of the breather piping shall not be more than 3 meters vii) Breather shall be removable type mounted at a height of 1400 mm from ground level. viii) Silica Gel used in breather should be of ix) ROUND BALL type & 2.5 mm dia. Breather shall be tested for 0.35 kg/cm for all joints
4.2.3	Conservator for OLTC	
4.2.3.1	Capacity	i) Adequate between highest and lowest visible levels to meet the requirement of expansion of oil volume in the OLTC from minimum ambient temperature to 100 deg cent. . ii) Separate conservator to be provided for OLTC and Main tank
4.2.3.2	Conservator oil preservation system	Conventional
4.2.3.3	OLTC conservator features	Same as 4.2.2.4 except air cell features
4.2.3.4	Fittings and accessories on OLTC conservator	i) Prismatic oil gauge with NORMAL and MINIMUM marking

		ii) End cover iii) Oil filling hole with cap iv) Magnetic oil gauge with LOW LEVEL Alarm contact v) Silica gel dehydrating breather with oil seal and dust filter with clear acrylic single piece clearly transparent cover resistant to UV rays vi) Drain valve (gate valve)With locking rod and position Indicator made of Brass, 25 mm with cover plate vii) Shut off valve (gate valve) with Position indicator made of Brass ocated before oil surge relay, 25 mm viii) Flange for breather connection ix) Air release plug as required
4.2.3.5	Essential provision for mounting of OLTC conservator	OLTC conservator to be mounted in such a way that the OLTC can be inspected / maintained without disturbing the OLTC conservator
4.2.3.6	Essential provision for OLTC breather	i) Breather piping shall not have any valve placed in between ii) Breather piping from conservator shall be supported in such a manner that the maximum unsupported length of the of the breather piping shall not be more than 3 meters iii) Breathers shall be removable type mounted at suitable height from ground so that it can be attended to easily for inspection / maintenance
4.2.4	Radiators	
4.2.4.1	Material	Pressed Steel
4.2.4.2	Thickness	Minimum 1.2 mm
4.2.4.3	Features	Detachable type with lifting lugs, air release plug, drain plug, isolating valve top and bottom in each radiator, Radiator support from ground if required
4.2.4.4	Essential provision if radiators mounted separately	Expansion bellow to be provided in the pipes between main tank and radiator headers
4.2.4.5	Essential provision for all type of radiators provided	Radiator header pipes shall not originate from tank top cover to make the tank top cover removable at site with minimum manpower.
4.2.5	Core	
4.2.5.1	Material	High grade, non ageing, low loss, high permeability, grain oriented, cold rolled silicon steel lamination
4.2.5.2	Grade	Premium grade minimum M3 or better
4.2.5.3	Lamination thickness	Max. 0.23 mm with insulating coating on both sides
4.2.5.4	Design flux density at rated	As per manufacturers design.

	conditions at principal tap	
4.2.5.5	Maximum flux density at 10% over excitation / over fluxing	As per Annexure C , Cl. 35.0
4.2.5.6	Core design features	i) Magnetic circuit designed to avoid short circuit paths within core or to the earthed clamping structure ii) Magnetic circuit shall not produce flux components at right angles to the plane of lamination to avoid local heating iii) Least possible air gap and rigid clamping for minimum core loss and noise generation iv) Adequately braced to withstand bolted faults on secondary terminals without mechanical damage and damage / dis-placement during transportation and positioning v) Percentage harmonic potential with the maximum flux density under any condition limited to avoid capacitor overloading in the system vi) All steel sections used for supporting the core shall be thoroughly sand blasted after cutting, drilling, welding vii) Provision of lifting lugs for core coil assembly viii) Supporting framework designed not to obstruct complete drainage of oil from transformer ix) The insulation of core to bolts and core to clamps plates shall be able to withstand a voltage of 2 kV rms for one minute, however boltless construction shall be preferred to avoid generation of hot spots and decomposition of oil as well as to reduce noise level.
4.2.6	Winding	
4.2.6.1	Material	Electrolytic Copper
4.2.6.2	Maximum current density allowed	3 A/mm^2
4.2.6.3	Winding Insulating material	Class A, non catalytic, inert to transformer oil, free from compounds liable to ooze out, shrink or collapse. • The insulation should comply the latest IS/IEC standards. The insulation details like the type, thermal class, and properties (e.g., dielectric strength, moisture resistance, thermal stability etc.) to be furnished. • Manufacturers (OEMs) should provide test reports verifying compliance with

		the specified insulation standards, including parameters like aging performance, mechanical strength, and compatibility with transformer oil.
4.2.6.4	Winding Insulation	Uniform
4.2.6.5	Design features	i) Stacks of winding to receive adequate shrinkage treatment before final assembly ii) Connection braced to withstand shock during transport, switching, short circuit, or other transients. iii) Minimum out of balance force in the transformer winding at all voltage ratios. iv) Conductor width on edge exceeding six times its thickness v) Transposed at sufficient intervals. vi) Threaded connection with locking facility vii) Winding leads rigidly supported, using guide tubes if practicable viii) Winding structure and major insulation not to obstruct free flow of oil through ducts ix) Provision of taps as indicated in the technical particulars
4.2.6.6	Essential provision for core coil assembly	i) Core coil assembly shall be mounted on bottom of the tank. ii) Earthing of core clamping structure and earthing of magnetic circuit shall be in line with CBIP reference manuals.
4.2.7	Transformer Oil	Should be in accordance with specification as per Annex D of this document.
4.2.8	Bushings and terminations	
4.2.8.1	Type below 52 kV	Oil communicating , outdoor, removable
4.2.8.2	Type 52kv and above	Oil filled porcelain condenser & non oil communicating type with oil level gauge, oil filling plug and drain valve if not hermetically sealed, tap for capacitance and loss factor measurement, removable without disturbing bushing CT'S.
4.2.8.3	Arcing horns.	Not required.
4.2.8.4	Termination on HV side bushing	By bimetallic connectors suitable for ACSR/AAAC conductor, cable connection through cable box with disconnecting link as per annexure A Scope of Supply.
4.2.8.5	Termination on LV side bushing	Cable connection through cable box with disconnecting link as per annexure A, scope supply.
4.2.8.6	Minimum creepage distance of bushing	As per annexure C cl 38.0
4.2.8.7	Protected creepage distance	At least 50 % of total creepage distance
4.2.8.8	Continuous current rating	Minimum 20 % higher than the current corresponding to the minimum tap of the

		transformer.
4.2.8.9	Rated thermal short time current	As per annexure C Cl 38.0
4.2.8.10	Atmospheric protection for clamp and fitting of iron and steel.	Hot dip galvanizing as per IS 2633
4.2.8.11	Bushing terminal lugs in oil and air.	Tinner copper.
4.2.8.12	Sealing washers /gasket ring.	Nitrile rubber/ Expanded TEFLON(PTFE) as applicable
4.2.9	HV, LV, LV Neutral cable box	Required.
4.2.9.1.1	Material of construction	Sheet steel min 4.0 mm thick. Inspection covers shall be min 3mm thick.
4.2.9.1.2	Cable box doors (33kV and 11kV Cable boxes)	The doors should be internal anti theft hinge with minimum opening angle of 120º, minimum 3 nos. with lockable handle & with padlocking facility
4.2.9.2	Cable entry	At bottom through detachable gland plate with cable clamps of non magnetic material
4.2.9..3	Cable size for HV	As pe annexure C Cl 15.1
4.2.9.4	Cable size for LV	As per Annexure C Cl 15.2
4.2.9.5	LV Neutral connection	As per Annexure C Cl 15.3
4.2.9.6	Detachable gland plate material for HV, LV, LV Neutral box	As per GTP
4.2.9.7	Gland plate thickness for HV, LV, LV Neutral box	As per GTP
4.2.9.8	Cable gland for HV, LV, LV Neutral cables	As per GTP
4.2.9.9	Cable lug for HV& LV cables	As per CL 4.9 of this spec and suitable for cable size as per GTP
4.2.9.10	Essential parts	i) Disconnecting chamber ii) Flexible disconnecting link of tinned copper iii) Tinned copper busbar for Owner's cable termination with busbar supports iv) Detachable gland plate as per Schedule A GTP Cl. 24.4, 24.5, 25.4, 25.5, 26.4, 26.5 v) Earthing boss for the cable box vi) Earthing link for the gasketted joints at two points for each joint vii) Earthing provision for cable armour / screen viii) Flange type Inspection cover with handle for Inspecting bushing and busbars on top as well as on front cover ix) Anti theft hinged type door with lockable handle & with padlocking facility for cable box. x) Drain plug xi) Rainhood on gasketted vertical joint

		xii) Danger plate made of Anodized aluminum with white letters on red background on HV and LV side fixed by rivets. xiii) Phase marking plate inside cable box near termination as well as on front cover of cable box made of anodized aluminum with black letters on satin silver background on HV and LV side fixed by rivets xiv) Support insulators for the busbars shall be epoxy resin cast type. xv) Space heaters for HV and LV cable box controlled by thermostat
4.2.9.11	Terminal Clearances	As per Annexure C technical particulars
4.2.9.12	Termination height required for cable termination	Minimum 1000 mm
4.2.9.13	Essential provision for LV neutral cable box	i) Neutral shall be outdoor type bushing OR with cable box. Box shall have adequately sized inspection cover suitable for inspection of bushings / replacement / maintenance of neutral CT. For Outdoor Bushing the NCT shall be mounted in IP55 box. ii) Knife switch with locking arrangement to be provided to disconnect the neutral from grounding. Connection from Neutral bushing to the knife switch shall be with 100x12mm Tinned copper bus bar. Bus Bar shall brought down to the bottom of the transformer supported by suitable support insulator made of epoxy resin cast (insulator shall be suitable for outdoor application suitable for connecting. iii) Knife switch shall be suitable for connecting 2 runs of 75 x 10 mm size GS strip. iv) Height of knife switch shall be at maximum 1500 mm. Housing of Knife switch shall be suitable for easy & quick operations.
4.2.10	Current Transformers	
4.2.10.1	WTI CT	As per GTP
4.2.10.1.1	Rating	As per GTP
4.2.10.1.2	Mounting	In the turret of the bushing
4.2.10.1.3	Essential provision	i) CT mounting shall be such that CT can be replaced without removing tank cover ii) CT secondaries shall be wired up to TB with TB spec. as per Cl. 4.7of this specification
4.2.10.2	Neutral CT	
4.2.10.2.1	Type	Cast resin
4.2.10.2.2	Rating	As per GTP
4.2.10.2.3	Location of NCT	Separate box with TB arrangement for

		secondary Bushing type not acceptable.
4.2.10.2.4	Essential provision	i) CT mounting shall be such that CT can be replaced without removing the neutral cable box. ii) CT secondary shall be wired upto TB
4.2.10.2.5	Size of NCT Box	Overall size of NCT box shall not exceed 1200x600x1000 mm including canopy on top.
4.2.11	Marshalling Box Cubicle	
4.2.11.1	Material of construction	Construction of Marshalling Box should be stainless steel 304 grade (Min) with powder coating of specified color shed
4.2.11.2	Door hinges of marshalling box should be from inner side and should not be exposed to rain.	Required
4.2.11.3	Major equipments in Marshalling box	i) Mechanical gauge for HV and LV WTI ii) Mechanical gauge for OTI iii) Power supply unit (PSU) for remote monitoring of OTI and WTI temperatures. PSU suitable for 48V-265V AC/DC supply. iv) Make of OTI and WTI is Precimeasure 1005AH/1007H model with PSU v) Electronic OTI/WTI Scanner vi) Capillaries for WTI and OTI min 15M length vii) Control & Protection Equipment for Fan Control viii) DC contactors to be provided for all trouble free signals. Same to be wired up to the TB ix) Other panel accessories listed elsewhere
4.2.11.4	Gland plate	i) Min. 3 mm thick detachable with knockout 6 x 1 inch ii) Gland plate mounting should be from inside only
4.2.11.5	Contacts wired to terminal block	i) WTI alarm and trip ii) OTI alarm and trip iii) Buchholz relay alarm and trip iv) OSR trip contacts v) MOG low level alarm vi) MOG on OLTC low level alarm vii) PRV main tank trip viii) PRV OLTC trip ix) Sudden pressure relay trip x) WTI and OTI PSU/ relay contacts of the temperature scanner. xi) Note: 2NO +2NC auxiliary contacts for all the above to be provided for customer use (By using auxiliary relay)
4.2.11.6	Signals to be wired to terminal block	i) WTI CT ii) NCT iii) Capillaries for WTI and OTI

		iv) 4 to 20 mA signals for WTI and OTI repeater located elsewhere
4.2.11.7	Ingress protection	IP 55 plus additional rain canopy to be provided
4.2.11.8	Welding	Continuous welding on joints, welding at regular intervals on joints and filling of gaps with use of M seal not accepted
4.2.11.9	Cable entry	Bottom for all cables
4.2.11.10	Panel internal Access	Front only through front door double leaf with antitheft hinges
4.2.11.11	Pane back access	None
4.2.11.12	Mounting of marshalling box	Separately mounted as per GTP
4.2.11.13	Panel supply	415 V AC, Three phase, 50 Hz
4.2.11.14	Panel accessories	i) Cubicle lamp with door switch and separate fuse / MCB ii) Approved space heaters controlled by thermostat and separate fuse / MCB iii) Incoming fuse switch / MCB for the incoming supply iv) Panel wiring diagram fixed on back of panel door on Aluminum plate engraved fixed by rivet v) Stainless steel door handle with lock & additional facility for padlock vi) Earthing boss for the marshaling box vii) Single phase power plug industrial type 15/5 Amp. With MCB viii) Single phase preventer
4.2.11.15	Painting of marshalling box	As per Cl. 4.10 of the specification
4.2.11.16	Hardware, Gasket, Cables and Wires, Terminal blocks, Cable gland, Cable lugs of marshalling box	As per Cl. 4.3, 4.4, 4.6, 4.7, 4.8, 4.9 of the specification respectively.
4.2.11.17	Fan motors control installed in marshalling box or separate fan control cubicle	i) 2 x 50% fans ii) Complete fan control with fuse switch, contactor, Bimetallic relay, in starter circuit with type 2 coordinated rating as per IS iii) Automatic control from WTI contact iv) Provision for manual control both from local/ remote. v) Fan Control Cubicle should be separately mounted. vi) 2RC/2RS type bearings shall be used instead of ball bearings. vii) Fan enclosure shall be perforated sheet with holes at motor side with ground support.
4.2.11.18	Control Cable Length	All the control Cable shall have minimum 15 Meters of length for all control cable, OTI, WTI Capillaries and NIPFPS control cables also.
4.3	Hardware	

4.3.1	External	M12 size & below Stainless Steel & above M12 Hot Dip galvanized steel.
4.3.2	Internal	Cadmium plated except special hardware for frame parts and core assembly as per manufacturer's design
4.3.3	Provision of fully enclosed Aluminium hoods/Canopy for following accessories of power transformer for protection against water ingress.	All Oil Surge Relays, Buchholz Relay, Pressure release Valve.
4.4	Gasket	
4.4.1	For transformer, OLTC chamber, PT chamber, surfaces interfacing with oil like inspection cover etc.	Nitrile rubber based
4.4.2	For cable boxes, marshalling box, OLTC drive mechanism etc.	Neoprene rubber based
4.4.3	Tank top cover gasket	It shall be double O ring type sealing arrangement seating over a double groove made in transformer tank & top cover.
4.5	Valves	
4.5.1	Material of construction	Gun metal/Brass
4.5.2	Type	Both end flanged gate valve / butterfly valve depending on application
4.5.3	Size	As per manufacture's standard
4.5.4	Essential provision	Position indicator, locking rod, padlocking facility, valve guard, cover plate.
4.6	Cable routing on Transformer	Control cable for accessories on transformer tank to marshalling box and WTI, OTI Capillaries shall be routed through perforated Covered GI trays
4.6.1	Control cable specification	i) PVC insulated, extruded PVC inner sheathed, armoured, extruded PVC outer sheathed 1100V grade control cable as per latest edition of IS 1554 Part 1 ii) Minimum 2.5 sqmm for signals and 4 sqmm for CT with multistrand copper conductor
4.6.2	Specification of wires to be used inside marshalling box, OLTC drive mechanism.	PVC insulated multi strand flexible copper wires of minimum 2.5 sqmm size, 1100 V grade as per latest edition of relevant IS
4.6.3	Essential provision for Capillary routing from transformer to marshalling box	Routing shall be done in such a way that adequate protection is available from mechanical and fire damage.
4.7	Terminal Blocks to be used by the vendor	Nylon 66 material, minimum 6 sqmm stud type screw driver operated for control wiring and potential circuit. Terminal blocks to be located in such a way to achieve the termination height as min 250 mm from grand plate.
4.7.1	Essential provision for CT	Sliding link type disconnecting terminal block

	terminals	screwdriver operated stud type with facility for CT terminal shorting material of housing melamine/Nylon66
4.8	Cable glands to used by the vendor	Nickel plated brass double compression weatherproof cable gland
4.9	Cable lugs to be used by the vendor	
4.9.1	For power cables	Long barrel medium duty bi-mettalic lug with knurling on inside surface
4.9.2	For control cable	Tinned copper pre insulated Pin Ring, Fork type as applicable. For CT connection ring type lug shall be used.
4.10	Painting of transformer, conservator, OLTC, Radiator, cable boxes marshalling box.	
4.10.1	Surface preparation	By 7 tank pretreatment process or shot blasting method
4.10.2	Finish on internal surfaces of the transformer interfacing with oil	Bright Yellow heat resistance and oil resistant paint two coats. Paint shall neither react nor dissolve in hot transformer insulating oil.
4.10.3	Frame parts	Bright Yellow heat resistance and oil resistant paint two coats. Paint shall neither react nor dissolve in hot transformer insulating oil.
4.10.4	Finish on inner surface of the marshalling box	White Polyurethane paint anti condensation type two costs, minimum dry film thickness 80 microns
4.10.5	Finish on outer surface of the transformer, conservator, radiator, cable boxes, marshalling box	Smoke Grey (IS shade 692) polyurethane paint two coats, minimum dry film thickness 80 micros

5.0 MINIMUM PROTECTIVE DEVICES ON TRANSFORMER

5.1	Spring loaded with detachable diaphragm type pressure relief valve with two trip contacts for the main tank of LSM model with limit switch design IP 65 with additional rain hood. PRV Oil discharge pipe arrangement	Required
5.2	Spring loaded with detachable diaphragm type pressure relief valve with two trip contacts for OLTC of LSM model with limit switch design IP 65 with additional rain hood. Oil discharge pipe arrangement	Required
5.3	Double float bucchholz relay with alarm and trip contacts, service and test position, with test cock for the	Reed Switch Type shall be required

	main tank, terminal box shall be IP 65 with drain plug for rainwater draining. Additional rain hood shall be provided.	
5.4	Oil surge relay with two contacts, services and test position, with test cock for OLTC tank, terminal box shall be IP 65 with drain plug for rainwater draining. Additional rain hood shall be provided.	Required
5.5	Sudden pressure relay with trip contact for the main tank	Required
5.6	Oil temperature indicator metallic bulb type 150 mm diameter with maximum reading pointer, potential free independent adjustable alarm and trip contacts, resetting device with temperature sensing element	Required
5.7	Winding temperature indicator 150 mm diameter with maximum reading pointer, two sets of potential free independent adjustable alarm and trip contacts, resetting device with temperature sensing element, thermal image coil	Required
5.8	2 No's PT 100 sensors/RTDs for winding temperature indication wired upto TB's in marshalling box for external connection.	Required
5.9	Magnetic switching for all the protective devices including Buchholz (alarm and Trip) OSR,SPR,WTI and OTI. Mercury switching is not acceptable	Required

6.0 FITTINGS AND ACCESSORIES ON TRANSFORMER

6.1	Rating and diagram plate	Required
6.1.1	Material	Anodized aluminum 16SWG
6.1.2	Background	SATIN SILVER
6.1.3	Letters, diagram & boder	Black
6.1.4	Process	Etching
6.1.5	Name plate details	Following details shall be provided on rating and diagram plate as a minimum i) Type / kind of transformer with winding material ii) Standard to which it is manufactured iii) Manufacture's name iv) Transformer serial number

		v) Month and year manufacture vi) Rated frequency in Hz vii) Rated voltages in kV viii) Number of phases ix) Rated power in kVA x) Type of cooling (ONAN) xi) Rated currents in A xii) Vector group symbol xiii) 1.2/50µs wave impulse voltage withstand level in kV xiv) Power frequency withstand voltage in kV xv) Impedance voltage at rated current and frequency in percentage at principal, minimum and maximum tap xvi) Load loss at rated current xvii) No load loss at rated voltage and frequency xviii) Auxiliary loss xix) Continuous ambient temperature at which ratings apply in □ C xx) Top oil and winding temperature rise at rated load in deg C xxi) Temperature gradient of HV and LV winding xxii) Winding connection diagram xxiii) Weight of radiator xxiv) Volume and weight of oil in radiator xxv) Transport weight of transformer xxvi) Weight of core and frame xxvii) Weight of winding xxviii) Weight of core and winding xxix) Weight of tank and fittings xxx) Total weight xxxi) Volume of oil xxxii) Weight of oil xxxiii) NCT, WCT, details xxxiv) Type of OLTC xxxv) Tapping details xxxvi) Name of the purchaser xxxvii) PO no and date xxxviii) Guarantee period
6.2	Instruction plate for OLTC anodized aluminum black lettering on satin silver background fixed by rivet	Required
6.3	Oil filling instruction plate anodized aluminum black lettering on satin silver background fixed by rivet	Required

6.4	Valve schedule plate anodized aluminum black lettering on satin silver background fixed by rivet	Required
6.5	Instruction plate anodized aluminum black lettering on satin silver background for flexible air cell for oil conservator	Required
6.6	Terminal marking plate for bushing WTI, OTI & RTD anodized aluminum black lettering on satin silver background fixed by rivet	Required
6.7	Company monogram plate	Required
6.8	Lifting lugs / bollards with antiskid head to lift complete transformer with oil	Required
6.9	Lashing lug	Required
6.10	Jacking pad with Haulage hole to raise or lower complete transformer with oil	Required
6.10.1	Essential provision for jacking pads. Designed in such a way that jacking of complete transformer with oil shall be possible with 3 nos jacking pads out of 4 nos jacking pads provided as minimum	Required
6.11	Detachable bi-directional roller assembly with corrosion resistant bearing, fitting / nipple for lubrication or with permanently lubricated bearing, anti earthquake locking device. The wheels shall be capable of swiveling when transformer is lifted with provision for locking the swivel movement. Roller shall be suitable for 90 lb rail. Suitable anti rolling clamp for 90 lb rail minimum 4 nos. shall be provided	Required
6.12	Pockets for OTI, WTI, & RTD on tank	Required (with one spare pocket for future use)
6.13	Pockets for ordinary thermometer on tank cover, top and bottom header of radiator, top of each radiator	Required
6.14	Ordinary thermometer 4 nos.	Required
6..15	Drain valve (gate valve) for the main tank, 80 mm	Required
6.16	Drain valve (gate valve) for OLTC, 50 mm	Required
6.17	Drain valve (gate valve) for all headers, 50 mm	Required

6.18	Filter valve (gate valve) at top and bottom of the main tank, 50 mm	Required
6.19	Sampling valve (gate valve) at top and bottom of the main tank, 15 mm	Required
6.20	Vacuum breaking valve (gate valve), 25 mm	Required
6.21	Drain plug on tank base	Required
6.22	Air release plug on various fitting and accessories	Required
6.23	Earthing pad on tank for transformer earthing complete with non ferrous nut, bolt, washers, spring washers etc.	Required
6.24	Vacuum pulling pipe with blanking plate on main conservator pipe work	Required
6.25	Rainhood (canopy) for Buccholz relay, PRV on main transformer and OLTC, OSR relay of OLTC	Required
6.26	Rainhood for vertical gasketted joints, in cable boxes	Required
6.27	Oil level gauge on tank for transformer shipment	Required
6.28	Earthing bridge by copper strip jumpers on all gasketted joints at least two points for electrical continuity	Required
6.29	Aluminum ladder with anti climbing device and safety flap, with lockable hinged plate for at least 1.5 m from ground level. Ladder shall be located in such a way that it avoids any hindrance to operation of nearby electrical/mechanical accessories etc.	Required
6.30	OLTC panel as specified	Required
6.31	Skid base welded type	Required
6.32	Core, frame to tank earthing	Required
6.33	Danger plate made of anodized aluminum white lettering on red background fixed by rivet	Required
6.34	Identification plate for all accessories, protective devices, instruments, thermometer / RTD pockets, earthing terminals, all inspection covers, cable boxes, marshalling boxes etc. made of anodized aluminum black lettering on silver background fixed by rivet	Required
6.35	Provision for Valves and NRV for	Required

	mounting of Nitrogen fire protection System	
6.36	Separate structure for mounting of cooling fans	Required
6.37	Terminal box of contacts from, Core and Yoke with shorting link at top cover of Transformer	Required. The IR test will be performed on these terminals on trailer prior to unloading at site.
6.38	Aluminum ladder on transformer top cover to conservator top	Required
6.39	Space heaters with thermostat control in HV and LV cable box	Required

7.0 OLTC

7.1	Requirement	i) For 33kV – CTR make EQ16 or equivalent. ii) For 66kV – CTR make FQ 16 or equivalent No in-tank OLTC acceptable.
7.2	OLTC gear location	Side mounted on conservator side not in front of HV bushing
7.3	Type of OLTC gear	i) The tapings shall be controlled by a high speed resistor transition type gear in which tap change is carried out virtually under 'no volt' 'no ampere' condition and the selector switches do not make and break any current, main current is never interrupted and a resistor is provided to limit the arching at diverter contacts to a minimum suitable for outdoor mounting and continuously rated for operating at all position including positions in the middle of tap change. In particulars, the tap change gear shall be suitable when delivering the full output plus permissible overload and operating the lowest voltage tap on the HV side. ii) The value of the transition resistor shall be indicated on the rating plate of the OLTC with continuous current rating with reference to design ambient temperature specified.
7.4	Tappings	As per Cl. 34 of Annexure C
7.5	Operation of OLTC gear	Selection of local / remote operation by selector switch on OLTC drive mechanism
7.5.1	local operation	From OLTC drive mechanism through pistol grip rotary switch as well as emergency mechanical hand operation.
7.5.2	Remote operation	From digital RTCC provided by customer /SCADA depending on the selection of control on digital RTCC panel.
7.6	Safety interlocks in OLTC	Following safety interlock to be provided in

		OLTC as minimum i) Positive completion of tap changing step once initiated ii) Blocking of reverse tap change command during a forward tap change already in progress until the mechanism resets and vice – versa iii) Cutting of electrical circuits during mechanical operation iv) Mechanical stops to prevent overrunning of the mechanism at the end taps v) Interlock to avoid continuous tap change which will cut off motor supply in such events vi) Raise / lower command in OLTC and Digital relay shall be positively interlocked
7.7	Feature of OLTC	i) OLTC mechanism and associated controls shall be housed in an outdoor, IP 55, weatherproof, vermin proof and dust proof cabinet ii) It shall be ensured that oil in compartments containing contacts making and breaking current compartments containing contacts not making and breaking current and main transformer tank does not mix iii) The hand cranking arrangement shall be such that it can be operated at standing height from ground level iv) Mechanical indicator to indicate completion of tap change operation shall be provided with suitable (Green & Red) colour code to confirm correct method of completion of tap change operation v) Contractors shall be placed in the OLTC driving mechanism in such a way that the name-plate shall be visible on opening of door. vi) Protective cover shall be provided for raise and lower push buttons, external ON-OFF switch, which are mounted on OLTC driving mechanism door. This is required to prevent unauthorized person operating these buttons. vii) It shall be possible to remove the top cover of the OLTC tank without difficulty. The OLTC conservator, piping & oil surge relay shall be placed accordingly. viii) The tap change equipment shall be so designed that if the mechanism is struck in an intermediate position, the transformer shall be capable of delivering full load

		without any damage. ix) Limit switches may be connected in the control circuit of the operating motor provided that a mechanical de-clutching mechanism is incorporated. Otherwise it shall be directly connected to the operating motor circuit and mechanical stop. x) Thermal devices or other means shall be provided to protect the motor and control circuits xi) The tap changer shall be capable of permitting parallel operation with other transformer for which necessary wiring and accessories, if any, shall be provided xii) The control scheme for the tap changer shall be provided for independent control of the tap changers when the transformers are in Independent service. In addition provision shall be made to enable parallel operation control also at times so that the tap changer will be operated simultaneously when oneunit is in parallel with another it will not become out of step and this will eliminate circulating current. Additional features like master /follower and visual indication during the operation of motor shall also be incorporated. xiii) OLTC shall be suitable for bi- directional power flow in transformer xiv) Mechanical indicator and operation counter shall be visible through glass window OLTC drive mechanism door xv) External ON /OFF switch in addition to door switch xvi) All mcb shall be located in such a way that they are easily replaceable. xvii) Motor protection relay shall be provided with single phasing prevent for both current and voltage unbalance. xviii) All accessories inside drive mechanism shall be provided with metallic label, no sticker permitted.
7.8	Essential BOM for OLTC drive mechanism (indicative only, bidder to provide all necessary components to complete the function of the OLTC)	i) Control circuit transformer 415/55-0-55 V, adequate capacity ii) Local remote selector switch 1 pole, 2 way, 6A, pistol grip iii) Retaining switch raise / lower iv) Handle interlock switch v) Raise / lower switch 1 pole, 2way, 6A, pistol grip vi) Lower limit switch

		vii) Raise limit switch viii) Tap changer motor, 415 V AC, 3 phase, adequate rating ix) Motor protection relay with single phasing preventor x) Motor control contactors raise / lower xi) Stepping relay xii) Out of step switch xiii) Tap position indicator xiv) Operation counter xv) Emergency stop push button xvi) Tap change incomplete scheme with timer xvii) Required indication lamp
7.9	Essential provision of accessories on OLTC	i) Pressure relief valve ii) Oil surge relay
7.10	Drive mechanism accessories	i) Cubical lamp with door switch and separate fuse / MCB with external ON /OFF switch on front cover of OLTC drive mechanism ii) Approved space heaters controlled by thermostat and separate fuse / MCB iii) Incoming fuse switch / MCB for the incoming supply iv) Panel wiring diagram fixed on back of panel door aluminium engraved fixed by rivet v) Nylon 66 terminal block min 4 sqmm screw type, with 10% spare terminals vi) Stainless steel door handle with lock & additional facility for padlock vii) Earthing boss
7.11	Hardware, Gasket, Cables and Wires, Terminal blocks, Cable gland, Cable lugs of OLTC drive mechanism	As per Cl. 4.3, 4.4, 4.6, 4.7, 4.8, 4.9 of the specification respectively.
7.12	OLTC and drive mechanism painting	As per Cl. 4.10 of the specification
7.13	RTCC panel	Not in the scope of supply.

8.0 APPROVED MAKE OF COMPONENTS

8.1	CRGO	Nippon/JFE/Posco
8.2	Copper	Birla copper/Sterlite
8.3	Pre compressed Pressboard	Raman Board, Mysore/ Senapathy Whiteley
8.4	Laminated Wood	Permalli Wallance / Rochling Engineers
8.5	Oil	Apar/Savita/Raj
8.6	Condensor Bushings (OIP)	CGL/BHEL/ABB/ALSTOM
8.7	Porcelain Bushing	CJI/Jayshree Insulators/BHEL

8.8	Steel	TATA/Jindal/SAIL
8.9	Lugs/Glands	Jainson/Dowells/Comet
8.10	Radiators	CTR/Hi-Tech Radiators/Tarang Engineers
8.11	Fans	Marathon / Khaitan
8.12	Magnetic Oil Level Indicator	Sukrut /Yogna
8.13	Pressure relief valve	Sukrut / Qualitrol
8.14	Bucchholz Relay	Proyog / ATVUS
8.15	Oil surge Relay	Proyog / ATVUS
8.16	Winding Temperature Indicator	Precimeasure / Perfect Controls / Pradeep sales
8.17	Oil Temperature Indicator	Precimeasure / / Perfect Controls/ Pradeep Sales
8.18	Sudden Pressure Relay	Sukrut / Qualitrol/ATVUS
8.19	Aircell	Sukrut(Unirub)/Pronol / Rubber Product
8.20	Neutral CT	Pragati /ECS / KAPPA/ Reputed equivalent
8..21	WCT	Pragati / ECS / KAPPA/ Reputed equivalent
8.22	Switch	L&T (Salzer) / Siemens
8.23	HRC Fuse Links	Siemens / L&T/GE
8.24	Fuse base	Siemens / L&T/GE
8.25	AC Contactors & O/L Relay	L&T / Siemens / Schneider
8.26	Terminals	Connectwell / Elmex
8.27	Push buttons / Actuator	L&T / Siemens
8.28	Thermostat	Velco/Girish
8.29	Heater	Velco/Girish
8.30	Voltmeter Selector Switch	Siemens/ equivalent
8.31	Control selector switch	Siemens/ equivalent
8.32	Auxiliary Relays	Jyoti / Easun Rayrole
8.33	Timers	L&T /Siemens
8.34	Tap Position Indicator	Accord
8.35	Annunciator	Accord
8.36	Digital tap change counter	Selectron
8.37	LED cluster type indication lamp	MIMIC/ Siemens/ Binay

Note – Any other make of component to be approved by Owner

9.0 QUALITY ASSURANCE

9.1	Quality assurance	To be submitted before contract award. Program shall contain following i) The structure of the organization. ii) The duties and responsibilities assigned to staff ensuring quality of work. iii) The system for purchasing, taking delivery and verification of materials. iv) The system for ensuring quality of workmanship v) The system for control of documentation vi) The arrangements for the suppliers internal auditing vii) The system for retention of records. viii) A list of the administration and work procedures required to achieve and verify contracts quality requirements. These procedures shall be made readily available to the purchaser for inspection on request.
9.2	Quality plan	To be submitted by the successful bidder for approval. Plan shall contain following as a minimum i) An outline of the proposed work and programme sequence ii) The structure of the suppliers organization for the contract. iii) The duties and responsibilities assigned to staff ensuring quality of work for the contract. iv) Hold and notification points. v) Submission of engineering documents required by the specification. vi) The inspection of materials and components on receipt vii) Reference to the suppliers work procedures appropriate to each activity viii) Inspection during fabrication /construction. ix) Final inspection and test. x) Successful bidders shall include submittal of Mills invoice, Bill of lading, Mills test certificate for grade, physical tests, dimension, specific watt loss per KG for the core material to the purchaser for verification in the quality plan suitably.
9.3	Manufacturing environment	Bidder to ensure the following manufacturing areas should be maintain positive atmospheric pressure, clean, dust free (Clean room class ISO 9 or better as per ISO 14644-1) and humid controlled environment. i) Insulation storage ii) Core storage iii) Glue stacking area iv) core cutting line

		v) Winding manufacturing bay vi) Core building area vii) Core coil assembly area viii) Testing lab ix) Packing & dispatch area
9.4	Accessories environment	Bidder to ensure the following accessories to be kept in clean and coved location i) Piping ii) Radiators iii) Tank iv) Bushing (as per manufacturer's guideline) v) Marshalling box vi) Turret vii) Conservator viii) Insulating oil
9.5	Manufacturing Quality Assurance Plan	Refer Annexure G

10.0 PROGRESS REPORTING

10.1	Online document	To be submitted for purchaser approval for outline of production , inspection,testing,packing dispatch ,documentation programmed
10.2	Detailed progress report	To be submitted to the purchaser once a month containing i) Progress on material procurement ii) Progress on fabrication iii) Progress on assembly iv) Progress on internal stage inspection v) Reason for any delay in total programme. vi) Details of test failures if any in manufacturing stages. vii) Progress on final box up. viii) Constraints/ Forward path.

11.0 INSPECTION & TESTING

11.1	Inspection and Testing during manufacture	
11.1.1	Tank and conservator	i) Check correct dimension between wheels demonstrate turning of wheels through 90 deg and further dimensional check. ii) Check for physical properties of material for lifting lugs, jacking pads etc. all load bearing welds, including lifting lug welds shall be subjected to required load tests iii) Leakage test of the conservator as per CBIP iv) Certification of all test results v) Oil leakage test on all tanks at normal head of oil

		plus 35 kN / sqm at the base of the tank for 24 hrs vi) Vacuum and pressure test on tank as type test as per CBIP vii) Leakage test of radiators as per CBIP.
11.1.2	Core	The below mentioned core critical points should complied by the bidder
11.1.2.1	Mother Core coil	i) Core material shall be directly procured either from the BSES approved manufacturer or through their authorized service centre/distributor and not through any contractor. ii) Verification & inspection of the mother coil at port & putting stamp & seal may be inspected by BSES.
11.1.2.2	Core cutting	Bidder should have in house core cutting facility for proper monitoring & control on quality. In case it is done outside cutting shall be done in presence of BSES.
11.1.2.3	Hydraulic core lifting	Bidder should have hydraulic core lifting facility to avoid any jerk at the time of core building
11.1.2.4	Core sample type testing	Reconciliation of mother coil by checking stamp & seal at factory before slitting. One sample of CRGO to be sealed for testing at ERDA/CPRI. Following Tests shall be conducted on the sample per P.O. i) Specific core loss measurement ii) Magnetic polarization iii) Magnetic permeability iv) Specific core loss measurement after accelerated ageing test v) Surface insulation resistivity vi) Electrical resistivity measurement vii) Stacking factor viii) Ductility(Bend test) ix) Lamination thickness x) Magnetization characteristics (B-H curve)
11.1.2.5	Core physical verification	i) Check on the quality of varnish if used on the stampings. a) Measurement of thickness and hardness of varnish on stampings. b) Solvent resistance test to check that varnish does not react in hot oil. c) Check over all quality of varnish by sampling to ensure uniform hipping colour, no bare spots. No ever burnt varnish layer and no bubbles on varnished surface. ii) Check on the amount of burns. iii) Bow check on stampings.

		iv) Check for the overlapping of stampings. Corners of the sheet are to be apart. v) Visual and dimensional check during assembly stage. vi) Check on complete core for measurements of iron-loss and check for any hot spot by exciting the core so as to induce the designed value of flux density in the core. vii) Check for inter laminar insulation between core sectors before and after pressing. viii) Visual and dimensional checks for straightness and roundness of core, thickness of limbs and suitability of clamps. ix) High voltage test (2 KV for one minute) between core and clamps. x) Certification of all test results.
11.1.2.6	Documents verification	Following documents to be submitted during the stage inspection i) Invoice of supplier ii) Mills test certificates iii) Packing list iv) Bill of lading v) Bill of entry certificates by customs
11.1.3	Insulating material	i) Sample check for physical properties of material ii) Check for dielectric strength iii) Visual and dimensional checks iv) Check for the reaction of hot oil on insulating materials v) Certification of all test results
11.1.4	Windings	i) Sample check on winding conductor for mechanical properties and electrical conductivity ii) Visual and dimensional check on conductor for scratches, dept. mark etc. iii) Sample check on insulating paper for PE value, bursting strength, electric strength iv) Check for the reaction of hot oil on insulating paper v) Check for the binding of the insulating paper on conductor vi) Check and ensure that physical condition of all materials taken for winding is satisfactory and free of dust vii) Check for absence of short circuit between parallel strands viii) Check for Brazed joints wherever applicable ix) Ensure the quality and strength of brazed joints connecting the main winding with the tap changer x) Emphasize tests to evaluate joint strength, thermal

		performance, and reliability under electrical and mechanical stresses xi) Stage inspection of core coil assembly to check the integrity/quality of OLTC connections like joints etc. in power transformer main tank xii) Measurement of voltage ratio to be carried out when core / yoke is completely restocked and all connections are ready xiii) Certification of all test results
11.1.4.1	Checks before drying process	i) Check conditions of insulation on the conductor and between the windings ii) Check insulation distance between high voltage connection cables and earthed and other live parts iii) Check insulation distance between low voltage connection cables and earthed and other parts iv) Insulation test of core earthing v) Check for proper cleanliness vi) Check tightness of coils i.e. no free movements vii) Certification of all test results
11.1.4.2	Checks during drying process	i) Measurement and recording of temperature and drying time during vacuum treatment. ii) Check for completeness of drying iii) Certification of all test result.
11.1.5	Oil	i) As per IS 335 and annexure-D ii) One sample of oil drawn from every lot of transformer offered for inspection should be tested at CPRI/ERDA for tests as listed under table 1 of IS 1866(2000).The cost of this testing should be included within the cost of transformer. Test result shall be confirming to Annexure D of this specification
11.1.6	Test on fittings and accessories	As per manufacturer's standard
11.2	Routine tests/Acceptance tests	The sequence of routine testing shall be as follows i) Visual and dimension check for completely assembled transformer ii) Measurements of voltage ratio iii) Measurements of winding resistance at principal tap and two extreme taps. iv) Vector group and polarity test v) Measurements of insulation resistance and polarization index. vi) Separate source voltage withstand test. vii) Measurements of iron losses and exciting current at rated frequency and 90%, 100% and 110% rated voltage. viii) Induced voltage withstand test. ix) Load losses measurement. x) Impedance measurement at principal tap (HV and LV) of the transformer.

		xi) Routine test of tanks xii) Induced voltage withstand test (to be Repeated if type tests are conducted). xiii) Measurement of iron loss (to be repeated if type tests are conducted). xiv) Measurement of capacitance and Tan Delta for for transformer winding and HV bushing (including bushing C1 and C2 Values) and Tan Delta for transformer oil (for all transformers). xv) Phase relation test, polarity, angular displacement and phase sequence. xvi) Ratio of HV WTI CT, LV WTI CT and neutral CT xvii) Excitation and knee point voltage test on class PS core of neutral CT. xviii) Routine test on on–load tap changer. xix) IR test from terminals mentioned in Clause no 6.37 xx) Oil leakage test on assembled transformer xxi) Magnetic balance test xxii) Power frequency voltage withstand test on all auxiliary circuits xxiii) Temperature rise test. xxiv) Certification of all test result xxv) SFRA xxvi) Aircell charging and discharging test a) Insulation resistance measurement shall be carried out at 5 kV. Value of IR should not be less than 2000M ohms. Polarization index (PI = IR10min/IR1min) should not be less than 1.5 (if one minute IR value is above 5000Mohms and it is not be possible to obtain an accurate 10 minutes reading, in such cases polarization index can be disregarded as a measure of winding condition.) b) Temperature rise test may be necessary to be carried out on 100% of the order quantity at the manufacturer's works or third party lab. c) BSES may appoint recognized testing authority like CPRI /ERDA with their instruments & engineer's team and measure no load loss, load loss and percentage impedance of the transformer at supplier's works at Vendor cost . Bidder shall agree and give them full co-operation during their stay & testing at shop floor. The losses & impedance values so obtained will be considered as final.
11.3	Type tests	On one transformer of each rating and type (In Govt. recognized independent test laboratory / Internationally accredited test lab or at manufacturer's facility if it is approved by component authority.

		i) Impulse withstand test on all three HV and LV limbs of the transformers for chopped wave as per standard ii) Temperature rise test as per IS iii) Dissolved gas analysis before and after Temperature Rise test to be carried out from CPRI/ERDA iv) Pressure relief device test v) Pressure and Vacuum test on tank(stage inspection)
11.4	Special tests	On one transformer of each rating and type i) Dynamic & Thermal short circuit test short circuit test as per IS ii) Measure of zero seq. impedance (Cl.16.10 IS 2026 part-1) iii) 3) measurement of acoustic noise level (Cl.16.12 IS 2026 part-1) iv) Measurement of harmonic level on no load current v) High voltage withstand test shall be performed on the auxiliary equipment and wiring after complete assembly. vi) CRGO testing for specific core loss, accelerated ageing test, surface insulation resistivity, AC permeability and magnetization, stacking factor, ductility etc vii) Oil testing to be tested at CPRI/ERDA labs, whose samples shall be selected & sealed by customer. Cost of such tests, if extra, shall be quoted separately by the bidder.
11.5	In house NABL accreditation	i) Bidder should have in-house NABL accredited testing facility. ii) NABL accreditation certificate to be submitted.
11.6	Note for special tests and type test	Cost of the above tests, if extra, shall be quoted separately by the bidder which shall be considered in the price evaluation.
11.7	Notification to bidders	The product offered must be of type tested design with valid type test report of not more than 5 years. In case the product offered is never type tested for tests as per above list, type tests to be conducted by bidder at his own cost at Govt. recognized independent test laboratory / Internationally accredited test lab or at manufacturer's facility if it is approved by component authority. Valid type test reports for dynamic short circuit test as per IS may be forwarded for customer's review and approval. In case the product offered is never tested for dynamic short circuit the same to be conducted by bidder at his

		own cost at Govt. recognized independent test laboratory/internationally accredited test lab.
11.7	Site Acceptance test	Following tests shall be conducted at BYPL site/store in presence of BYPL official. i) Insulation Resistance from terminal box mentioned in clause no 6.37. The test shall be conducted on following basis: a) The IR test will be performed on the terminals mentioned in clause no 6.37 on trailer prior to unloading at site. b) The results shall be compared with the results obtained during inspection. c) The IR value in any of the tests (Factory as well as site) should not be less than 2000M Ohm d) To access internal physical damage during transportation, Transformer will not be received if the site results are less than 2000MOhm. ii) SFRA with same kit done at factory (Instrument shall be in Vendors scope iii) Magnetic Balance test iv) Measurement of Voltage ratio v) Measurement of capacitance and Tan Delta for transformer winding and HV bushing (for all vi) transformers). vii) Vector Group and Polarity viii) Physical checks ix) Oil BDV Note: Testing instruments shall be in scope of Vendor.

12.0 PACKING, SHIPPING, HANDLING AND STORAGE

12.1	Packing	
12.1.1	Packing protection	Against corrosion, dampness, heavy rains, breakage and vibration.
12.1.2	Packing for accessories and spares	Robust wooden non returnable packing case with all the above protection
12.1.3	Packing details	On each packing case details required as follows i) Individual serial number: ii) Purchaser's name: iii) PO Number: iv) Destination: v) Suppliers name: vi) Name and address of suppliers agent vii) Description and numbers of contents: viii) Manufacturers name: ix) Country of origin;: x) Case measurements: xi) Gross and net weights in kilograms

		xii) All necessary slinging and stacking instructions.
12.2	Shipping	The bidder shall ascertain at an early date and definitely before the commencement of manufacture, any transport limitations such as weights, dimensions, roads culverts, overhead lines, free access etc. from the manufacturing plant to project site :and furnish to the purchaser confirmation that the proposed packages can be safely transported, as normal or oversize packages up to the plant site. Any modifications required in the infrastructure and cost thereof in this connection shall be brought to the notice of the purchaser.
12.3	Handling and storage	As per manufacturers instruction.

13.0 COMMISIONING SUPPORT

13.1	Commissioning support	Supervision of Erection and Commissioning inclusive of all testing equipments/instruments shall be included for minimum 3 days for each Transformer. It includes following: i) BSES will give vendor 7 days advance notice prior to erection testing and commissioning of Transformer. ii) After successful erection testing and commissioning of Transformer Vendor shall issue erection quality check certificate to BSES.

14.0 TRAINING

14.1	Training at factory and at site after installation	Training on installation, commissioning, operation and maintenance shall be included in the proposal.

15.0 DEVIATIONS

15.1	Deviation	Deviations from this Specification shall be stated in writing with the tender by reference to the Specification clause/GTP/Drawing and a description of the alternative offer. In absence of such a statement, it will be assumed that the bidder complies fully with this specification. No deviation will be acceptable post order.

16.0 DRAWINGS AND DOCUMENTS

Drawing submission shall be as per the matrix given below. All documents/ drawing shall be provided on A3/A4 sheet in box file with separators for each section. PDF shall also be provided of all documents via USB. Deviation sheet and GTP shall be provided in excel

sheet.Language of the documents shall be English only. Deficient/ improper document/ drawing submission may liable for rejection.

S.no	Documents to be submitted	With the bid	After Award	
			For Approval	Prior to dispatch
1	Copy of specification along with company seal & signature on each page.	✓	✓	
2	Guaranteed technical particulars	✓	✓	
3	Outline dimension drawing for each major component, general arrangement drawing showing component layout an general schematic diagrams.	✓	✓	
4	Type test certificates, where available, and sample routine test reports	✓	✓	
5	Detailed reference list of customers already using equipment offered during the last 5 years with particular emphasis on units of similar design and rating	✓		
6	Details of manufacturers quality assurance standard and programmed and ISO 9000 series or equivalent national certification.	✓		
7	Deviations from this specification. Only deviations approved in writing before award of contract shall be accepted.	✓		
8	Recommended spare parts and consumable items for the five years of operation with prices and spare parts catalogue with price list for future requirements.	✓		
9	Transport / shipping dimension and weights, space required for handling parts for maintenance	✓		
10	Write up on oil preservation system.	✓	✓	
11	Write up on OLTC.	✓	✓	
12	Quality assurance program.	✓	✓	
13	Programme for production and testing		✓	
14	General description of the equipment and all components, including brochures		✓	

S.no	Documents to be submitted	With the bid	After Award	
			For Approval	Prior to dispatch
15	Detailed dimension drawing for all components ,general arrangement drawing showing detailed component layout and detailed schematic and wiring drawings for all components like marshalling box and OLTC drive mechanism box.		✓	
16	Calculations to substantiate choice of electrical, structural, mechanical component size, ratings		✓	
17	Detailed loading drawing to enable the purchaser to design and construct foundations for the transformer.		✓	
18	Transport /shipping dimension with weights ,wheel base details, un tanking height etc.		✓	
19	Terminal arrangements and cable box details		✓	
20	Flow diagram of cooling system showing no. of cooling banks		✓	
21	Drawings of major components like bushing,CT etc		✓	
22	Valve schedule diagram plate		✓	
23	Instruction plate for flexible separator		✓	
24	Rating and diagram plate with OLTC connection details		✓	
25	Lists of makes of all fittings and accessories		✓	
26	Statement drawing attention to all exposed points in the equipment at which contact with or in close proximity to other metals and stating clearly what protection is employed to prevent corrosion at each point		✓	
27	Detailed installation and commissioning instructions		✓	
28	Inspection and test reports carried out in manufacturers works			✓
29	Test certificates of all bought out items.			✓
30	Operation and maintenance instructions as well as trouble shooting charts.			✓

ANNEXURE – A – SCOPE OF SUPPLY

Design, manufacture, assembly, testing at stages of manufacture as per Cl. 11 of this specification, final testing at manufacturer works on completely assembled transformer before dispatch, packing, transportation, delivery and submission of all documentation for the Power transformer with all accessories as below and ratings & requirements as specified in Annex C.

Sr No	Description	Scope of Supply
1.0	Fully assembled transformer with all major parts like conservator, Radiators, Marshalling box, Protective devices as per Clause 5.0 of this specification, Fittings and accessories as per Clause 6.0 of this specification	YES
1.1	OLTC as per this specification	YES
1.2	RTCC panel as per this specification	No
1.3	HV, LV ,LV NEUTRAL cable boxes	YES
1.4	Support steel material for support of cable boxes from ground	YES
1.5	Foundation Bolts for complete transformer	YES
1.6	Nickel Plated brass double compression weather proof glands for 33kV cables	YES
1.7	Long barrel medium duty Aluminum lugs for power cables	YES
1.8	Nickel Plated brass double compression weatherproof glands and tinned copper lugs for control cable termination in Marshalling box for vendor's cables	YES
1.9	Cables and wires for transformer accessories and internal wiring of marshalling box.	YES
1.10	Touch up paint, minimum 5 liters.	YES
1.11	Extra Transformer oil 10 % in non returnable drums	YES
1.12	One spare complete set of gaskets.	YES
1.13	One set (4 Nos in a set) of anti rolling clamp for 90 lb rail.	YES
1.14	Ordinary thermometers 4 Nos'	YES
1.15	Recommended spares as per manufacturer	YES
2.0	Routine testing as per Clause 11 of this specification	YES
3.0	Type testing as per Clause 11 of this specification	YES
4.0	Special testing as per Clause 11 of this specification	YES
5.0	Submission of Documentation as per clause 16 of this specification	YES

ANNEXURE – B – SERVICE CONDITIONS

1.0	Delhi Atmospheric condition	
1.1	Average grade atmosphere	Heavily polluted, dry
1.2	Maximum altitude above sea level	1000M
1.3	Ambient air temperature	50 deg C
1.4	Relative humidity	90% Max
1.5	Seismic zone	4
1.6	Rainfall	750 mm concentrated in four months

ANNEXURE – C – TECHNICAL PARTICULARS (DATA BY OWNER)

Sr No	Description	Data by Owner	
1.0	Location of equipment	OUTDOOR	
2.0	Reference design ambient temperature	40 deg C	
3.0	Type	Oil immersed, core type, step down	
4.0	Type of cooling	ONAN / ONAF	
5.0	Reference standard	IS: 2026	
6.0	No. of phases	3	
7.0	No. of winding per phase	2	
8.0	Rated frequency (Hz)	50 Hz	
9.0	Rated voltage (kV)		
9.1	HV winding	33	66
9.2	LV winding	11	11
10.0	Vector group reference	Dyn11	Dyn11
11.0	Nominal continuous rating, KVA		
11.1	For 20/25 MVA		
	ONAN	20	20
	ONAF	25	25
11.2	For 25/31.5 MVA		
	ONAN	25	25
	ONAF	31.5	31.5
12.0	Impedance at principal tap at rated frequency with IS tolerance		
12.1	For 20/25 MVA	15% (for 25MVA)	15% (for 25MVA)
12.2	For 25/31.5 MVA	15% (for 31.5MVA)	15% (for 31.5MVA)
13.0	Maximum no load loss at rated condition allowed without any positive tolerance kW		
13.1	For 20/25 MVA	12kW (for 25 MVA),	12kW (for 25 MVA),
13.2	For 25/31.5 MVA	14 kW (for 31.5 MVA)	14 kW (for 31.5 MVA)
14.0	Maximum load loss at rated condition @ 75 deg C and principal tap allowed without any positive		

	tolerance, kW		
14.1	For 20/25 MVA	85 kW (for 25MVA),	85 kW (for 25MVA),
14.2	For 25/31.5 MVA	115 kW (for 31.5 MVA	115 kW (for 31.5 MVA
15.0	Terminal connection / cable / conductor size		
15.1	HV side	33kV	66 kV
		By 2 runs of 3C X400sq mm A2XFY ,33kV(E) grade cable for 20/25 MVA.	By single /Double ACSR "ZEBRA" conductor per phase
15.2	LV side	1) By 3 runs of 1C x 1000 sqmm per phase A2XY unarmoured cable 11 kV (E) grade cable (For 25MVA) 2) By 4 runs of 1C x 1000 sqmm per phase A2XY unarmoured cable 11 kV (E) grade cable (For 31.5MVA)	
15.3	LV neutral	By G .S. strip mim 2x75x10 mm size	By G.S. strip min 2x75x10 mm size
16.0	Highest system voltage HV side, kV	36	72.5
17.0	Highest system voltage LV side, kV	12	12
18.0	Lightning impulse withstand voltage, kV peak		
18.1	For nominal system voltage of 11 kV	75	
18.2	For nominal system voltage of 33 kV	170	
18.3	For nominal system voltage of 66 kV	325	
19.0	Power frequency withstand voltage kV rms		
19.1	For nominal system voltage of 11 kV	28	
19.2	For nominal system voltage of 33 kV	70	
19.3	For nominal system voltage of 66 kV	140	
20.0	Clearances phase to phase, mm		
20.1	For nominal system voltage of 11 kV	280	
20.2	For nominal system voltage of 33 kV	350	
20.3	For nominal system voltage of 66 kV	700	
21.0	Clearances phase to earth, mm		

21.1	For nominal system voltage of 11 kV	140
21.2	For nominal system voltage of 33 kV	320
21.3	For nominal system voltage of 66 kV	660
21.4	Ground clearance – Live part to ground for 66kV – mm	4000
22.0	System fault level, HV side	1500 MVA for 33 kV 3600 MVA for 66 kV
23.0	System fault level, LV side	500 MVA for 11 kV
24.0	Short circuit withstand capacity of the transformer	
24.1	Three phases dead short circuit at secondary terminal with rated voltage maintained on the other side	For 3 secs.
24.2	Single phase short circuit at secondary terminal with rated voltage maintained on the other side	For 3 secs.
25.0	System earthing	
25.1	HV	Solidly earthed
25.2	LV	Solidly earthed
26.0	Overload capability	As per IS 2026 part 7
27.0	Noise level	Shall not exceed limit as per NEMA TR- 1 with all accessories running measured as per IEC 551 / NEMA standard
28.0	Radio influence voltage	Maximum 250 microvolt
29.0	Harmonic suppression	Transformer to be designed for suppression of 3rd, 5th, 7th harmonic voltage and high frequency disturbances
30.0	Partial discharge	10 Pico C
31.0	Temperature rise of top oil by thermometer	40 deg C
32.0	Temperature rise of winding by resistance	45 deg C
33.0	Note for the bidders	(left blank)
34.0	Tapping to be provided on HV winding for OLTC	For 33/11 kV & 66/11kVTransformer +10% to -10% @step of 1.25 % 16 taps, 17 tap positions
35.0	Maximum flux	1.9 Tesla

	density allowed in the core extreme over excitation /over fluxing, Tesla	
36.0	Maximum current density allowed	3.0 Amperes per sqmm @ lowest tap.
37.0	AVR input voltage/ Auxiliary supply	Not applicable
38.0	Bushing parameters	
38.1	Rated Current for 20/25 MVA Xmer	1000 A for 33 kV bushing 2000 A for 11kV bushing
38.2	Creepage factor for all bushing mm /KV	31 mm / kV minimum
38.3	Rated thermal short time current for all bushing	25 times rated current for 2 secs
38.4	Angle of mounting	0 to 90 degree
38.5	Cantilever withstand load	for 33 kV bushing- as per std. vendor 2000N for 11kV bushing
38.6	Overall Length (Approx)	for 33 kV bushing- as per std. vendor 503 mm for 11 kV bushing
38.7	Diameter of base	100 mm

ANNEXURE – D – TECHNICAL SPECIFICATION FOR TRANSFORMER OIL

Codes and standards

Latest revision of following codes and standards with all amendments-

Cl no.	Standard no	Title
1.1	IS 335	New insulating oils
1.2	IS1783	Drums for oils

2.0 Properties

Sr No	Item description	Specification requirement
2.1	**Function**	
2.1.1	Viscosity	
2.1.1.1	Viscosity at 40^0C	15 mm^2/s, Max
2.1.1.2	Viscosity at 0^0C	1800 mm^2/s, Max
2.1.2	Pour Point	- 10^0C, Max
2.1.3	Water content	30 mg/Kg, Max
2.1.4	Breakdown voltage	
2.1.4.1	New unfiltered oil	30 kV, Min
2.1.4.2	After filtration	70 kV, Min
2.1.5	Density at 20^0C	0.895 g/ml, Max
2.1.6	Dielectric dissipation factor at 90^0C	0.005, Max
2.1.7	Particle Content	Manufacturer to specify the data
2.2	**Refining/Stability**	
2.2.1	Appearance of oil	Clear, free from sediment and suspended matter
2.2.2	Acidity	0.01 mg KOH/g, Max
2.2.3	Interfacial tension at 27^0C	0.04 N/m, Min
2.2.4	Total sulphur content	Manufacturer to specify the data
2.2.5	Corrosive sulfur	Not-corrosive
2.2.6	Potentially Corrosive sulfur	Not-corrosive
2.2.7	DBDS	Not detectable (<5 mg/kg)
2.2.8	Inhibitor	Not detectable (<0.01%)
2.2.9	Metal Passivator	Not detectable (<5 mg/kg)
2.2.10	Other additives	Manufacturer to specify the data
2.2.11	2-furfural and related Compounds content	Not detectable (<0.05 mg/kg) for each individual compound
2.3	**Performance**	
2.3.1	Oxidation stability, test duration 164 h	
2.3.1.1	Total acidity	1.2 mg KOH/g, Max
2.3.1.2	Sludge	0.8%, Max
2.3.1.3	DDF at 90^0C	0.5, Max

2.3.2	Gassing Tendency	Manufacturer to specify the data
2.3.3	ECT	Manufacturer to specify the data
2.4	**Health,safety and Environment**	
2.4.1	Flash point	135^0C, Min
2.4.2	PCA content Max	3%, Max
2.4.3	PCB content	Not detectable (<2 mg/Kg)

ANNEXURE – E– SPECIFICATION FOR SILICAL GEL BREATHER

This specification is intended to cover the manufacturing, testing at manufacturer's works, supply and delivery of "Silica Gel Breather" to the purchaser.

1.0 Scope of Supply

Silica Gel Breather shall be as per REL specification suitable for use in Power Transformer (Main
Tank conservator & OLTC conservator) & for Distribution Transformer (Tank Conservator)

2.0 General

Silica Gel Breather offered by seller shall be suitable for continuous operation of prevailing climatic conditions as mentioned in Annexure –B

3.0 Specific Requirement

3.1 Breather

1.	Body	Aluminium pressure die caste Short Blasted & Powder Coated
2.	Container	Polycarbonate : 143R grade
3.	Oil Cup	Polycarbonate : 143R grade
4.	Gasket	Nitrile cork rubber for main body & oil cup gasket
5.	Silica Gel	Round ball type of size 2-5 mm (deep Blue)
6.	Paint	Powder Coated
7.	Mounting	Threaded for existing Transformers. Flanged type for New Transformers
8.	Hardware	Stainless Steel
9.	Flange Type, Size & hardware	Flange should be of circular shape with diameter of & with hardware of M10 bolts.

3.2 The indicating grade of Silica Gel, which shall be filled in the breather, is hard Blue Round Ball with considerable absorption power of moisture & hence signaling the saturation degree by changing colour (from Blue to Pink).

3.3 The breather shall have clear visibility of Gel colour & of oil level with dust particles in the oil cup from distance.

3.4 Breather should breathe only from the inlet holes provided for breathing. Air should not enter anywhere from the body of breather.

3.5 Silica Seal shall be applied on gasket for better air tightening.

3.6 Gel removing & refilling method is specially designed to avoid skilled labour requirement at site & consequent air leakages.

3.7 Oil filling indicator on oil cup.

3.8 Application

Transformer Size	Rating	Silica Gel Quantity in KG	
		Main Tank Conservator	OLTC Conservator
Power Transformer	20 & 31.5 MVA	5.0 Kg	1.0 Kg

3.9 Silica Gel

Sl. No	Properties	Requirement
1	Particle Size	Round ball type of size 2.5 mm (deep Blue)
2	Bulk Density	570-700 g/l
3	Moisture Adsorption Capacity 1. R.H. = 100% 2. R.H. = 50% 3. R.H. = 40% 4. R.H. = 20%	25 % (min)
4	Appearance	99.5% (min)
5	Friability	99.5% (min)
6	Chlorides percent by mass (max)	0.04%
7	Sulphates percent by mass (max)	0.5%
8	Cobalt percent by mass (max)	0.5%
9	Ammonium Compounds by mass (max)	0.001%
10	Loss on drying	4% (max)
11	pH of Aqueous extract	5-6.5%
12	Loss on Attrition	< 2.5 %

4.0 Marking

A Sticker label Indicating manufacturer's Name, Sr. No. Gel capacity etc. shall be provided at suitable place. Container may also marked with the Standard mark.

5.0 Testing

Breather container shall be suitably blanked & pressure tested with air at 0.35 Kg/cm for 30 minutes. There shall not be any leakages from gasketted joints. Test certificates from accredited laboratory shall be submitted.

6.0 Prototype

Before starting manufacture of the quantity ordered, the successful bidder shall submit a prototype for approval. Unless the prototype is inspected and approved, manufacturing shall not be started. The necessity of submitting prototype shall be ascertained before starting of manufacturing.

7.0 Packing & Keeping Quality

The material shall be packed in clean, dry & air tight container. The material stored in original air tight containers shall continue to satisfy all the properties of Silica Gel for not less than 6 months from date of packing.

8.0 Compliance Status / Deviation

Bidder shall indicate compliance status for every requirement & feature, on the right hand side margin of the specification.

9.0 Documents Comprising The Bid

The bidder shall complete the bid proposal sheets inclusive of copy of the specification duly filled in with compliance status, quality & operational manuals, Test certificates etc.

Indicating the material to be supplied, a brief description of the goods, their quantity and prices. In absence of these documents, the offer shall be considered incomplete & may be rejected.

ANNEXURE – F – MANUFACTURING QUALITY ASSURANCE PLAN

SL NO	COMPONENT & CHARACTRISTICS	CLASS	TYPE OF CHECK	QUALITY OF CHECK	REFERENCE DOCUMENT	ACCEPTANCE NORMS	FORMAT OF RECORD	AGENCY			REMARKS
								S	M	O	
1	2	3	4	5	6	7	8	9			10
A	**RAW Material**										
1	**Winding Conductor (PICC)**										
1.1	Bare Dimensions & Finish of Conductor	Major	Measurement	1 sample per size per lot	MFR. STD / IS 13730 Part 27	MFR. STD / IS 13730 Part 27	Supplier's TC	P	V	R	
1.2	Increase in dimensions due to Paper covering	Major	Measurement	-DO-	-DO-	-DO-	-DO-	P	V	R	
1.3	Resistivity @ 20°C	Major	Electrical	-DO-	-DO-	-DO-	-DO-	P	V	R	
1.4	No of Layers	Critical	Measurement	-DO-	-DO-	-DO-	-DO-	P	V	R	
1.5	Conductor Tensile strength	Critical	Mechanical	-DO-	-DO-	-DO-	-DO-	P	V	R	
1.6	Conductor Elongation	Critical	Mechanical	-DO-	-DO-	-DO-	-DO-	P	V	R	
1.7	% Overlap of Paper	Critical	Mechanical	-DO-	-DO-	-DO-	-DO-	P	V	R	
1.8	Corner Radius	Critical	Mechanical	-DO-	-DO-	-DO-	-DO-	P	V	R	
1.9	**Kraft Paper Insulation**										
1.9.1	Thickness	Major	Measurement	1 sample per size per lot	MFR. STD/ IEC 60554	MFR. STD/ IEC 60554	Supplier's TC	P	V	R	
1.9.2	Apparent Density	Major	Chemical	-DO-	-DO-	-DO-	-DO-	P	V	R	

SL NO	COMPONENT & CHARACTRISTICS	CLASS	TYPE OF CHECK	QUALITY OF CHECK	REFERENCE DOCUMENT	ACCEPTANCE NORMS	FORMAT OF RECORD	AGENCY			REMARKS
								S	M	O	
1	2	3	4	5	6	7	8	9			10
1.9.3	Air Permeability	Major	Chemical	-DO-	-DO-	-DO-	-DO-	P	V	R	
1.9.4	Tensile Index (Longitudinal and Transverse)	Major	Mechanical	-DO-	-DO-	-DO-	-DO-	P	V	R	
1.9.5	Electrical Strength in Air	Major	Electrical	-DO-	-DO-	-DO-	-DO-	P	V	R	
1.9.6	Ash Content	Major	Chemical	-DO-	-DO-	-DO-	-DO-	P	V	R	
1.9.7	pH of 5% Aqueous Extract	Major	Chemical	-DO-	-DO-	-DO-	-DO-	P	V	R	
1.9.8	Conductivity of 5% Aqueous Extract	Critical	Chemical	-DO-	-DO-	-DO-	-DO-	P	V	R	
1.9.9	Moisture Content	Major	Chemical	-DO-	-DO-	-DO-	-DO-	P	V	R	
1.9.10	Heat Stability	Major	Chemical	-DO-	-DO-	-DO-	-DO-	P	V	R	
1.9.11	Degree of Polymerization	Major	Chemical	-DO-	-DO-	-DO-	-DO-	P	V	R	
1.9.12	Elongation (MD & CMD)	Major	Mechanical	-DO-	-DO-	-DO-	-DO-	P	V	R	
1.9.13	Tear index	Major	Mechanical	-DO-	-DO-	-DO-	-DO-	P	V	R	
2.0	**CRGO Laminations (Watt absorption)**										
2.1	Specific Core Loss	Major	Electrical	Random	MFR. STD/IS 3024	MFR. STD/IS 3024	Supplier's TC	P	V	R	
2.2	Surface Insulation resistance	Major	Electrical	-DO-	-DO-	-DO-	-DO-	P	V	R	

SL NO	COMPONENT & CHARACTRISTICS	CLASS	TYPE OF CHECK	QUALITY OF CHECK	REFERENCE DOCUMENT	ACCEPTANCE NORMS	FORMAT OF RECORD	AGENCY			REMARKS
								S	M	O	
1	2	3	4	5	6	7	8	9			10
2.3	Ageing Test	Major	Measurement	-DO-	-DO-	-DO-	-DO-	P	V	R	
2.4	Stacking Factor	Major	Measurement	-DO-	-DO-	-DO-	-DO-	P	V	R	
2.5	Waviness	Major	Measurement	-DO-	-DO-	-DO-	-DO-	P	V	R	
2.6	Edge Burr	Major	Visual	-DO-	-DO-	-DO-	-DO-	P	V	R	
2.7	Sample testing for Checking Specific Core loss, accelerated ageing test, Surface insulation resistivity, AC permeability and magnetization, stacking factor, Ductility	Major	Electrical	**100%**	MFR. STD/IS 3024	MFR. STD/IS 3024	--	--	P	**W**	Sample will be randomly selected by BSES & will be send for testing at CPRI/ERDA lab.
3.0	**Un-impregnated Laminated Wood**										
3.1	Thickness	Major	Visual	1 sample size / LOT	MFR.D STD/ IEC 61061	MFR.D STD/IEC 61061	Supplier's TC	P	V	R	
3.2	Density	Major	Chemical	-DO-	-DO-	-DO-	-DO-	P	V	R	
3.3	Moisture Content	Major	Chemical	-DO-	-DO-	-DO-	-DO-	P	V	R	
3.4	Oil Absorption	Major	Chemical	-DO-	-DO-	-DO-	-DO-	P	V	R	
3.5	Cross breaking strength	Major	Mechanical	-DO-	-DO-	-DO-	-DO-	P	V	R	
3.6	Compressive Strength	Major	Mechanical	-DO-	-DO-	-DO-	-DO-	P	V	R	

SL NO	COMPONENT & CHARACTRISTICS	CLASS	TYPE OF CHECK	QUALITY OF CHECK	REFERENCE DOCUMENT	ACCEPTANCE NORMS	FORMAT OF RECORD	AGENCY			REMARKS
								S	M	O	
1	2	3	4	5	6	7	8	9			10
3.7	Electric Strength in Oil	Major	Electrical	-DO-	-DO-	-DO-	-DO-	P	V	R	
3.8	Shrinkage in oil	Major	Mechanical	-DO-	-DO-	-DO-	-DO-	P	V	R	
3.9	Tensile Strength	Major	Mechanical	-DO-	-DO-	-DO-	-DO-	P	V	R	
4.0	**Press Boards (Pre-compressed)**										
4.1	Thickness	Major	Measurement	1 sample/Size/LOT	MFR. STD/ IEC 60641	MFR. STD/ IEC 60641	Supplier's TC	P	V	R	
4.2	Tensile Strength (MD & CMD)	Major	Mechanical	-DO-	-DO-	-DO-	-DO-	P	V	R	
4.3	Shrinkage in Air (MD & CMD)	Major	Mechanical	-DO-	-DO-	-DO-	-DO-	P	V	R	
4.4	Moisture Content	Major	Chemical	-DO-	-DO-	-DO-	-DO-	P	V	R	
4.5	Oil Absorption	Major	Chemical	-DO-	-DO-	-DO-	-DO-	P	V	R	
4.6	Electrical Strength in Oil and air	Major	Electrical	-DO-	-DO-	-DO-	-DO-	P	V	R	
4.7	pH of 5% aqueous extract	Major	Chemical	-DO-	-DO-	-DO-	-DO-	P	V	R	
4.8	Conductivity of 5% aqueous extract	Major	Chemical	-DO-	-DO-	-DO-	-DO-	P	V	R	
4.9	Compressibility	Major	Mechanical	-DO-	-DO-	-DO-	-DO-	P	V	R	
4.10	Ash Content	Major	Chemical	-DO-	-DO-	-DO-	-DO-	P	V	R	

SL NO	COMPONENT & CHARACTRISTICS	CLASS	TYPE OF CHECK	QUALITY OF CHECK	REFERENCE DOCUMENT	ACCEPTANCE NORMS	FORMAT OF RECORD	AGENCY			REMARKS
								S	M	O	
1	2	3	4	5	6	7	8	9			10
4.11	Apparent density	Major	Chemical	-DO-	-DO-	-DO-	-DO-	P	V	R	
4.12	Elongation (MD & CMD)	Major	Mechanical	-DO-	-DO-	-DO-	-DO-	P	V	R	
5.0	**Tank and its accessories**										
5.1	Structural steel										
5.1.1	Thickness	Major	Measurement	Random	MFR. STD / IS 2062	MFR. STD / IS 2062	Suppliers TC	P	V	R	
5.1.2	Yield Strength	Major	Mechanical	-DO-	-DO-	-DO-	-DO-	P	V	R	
5.1.3	Tensile Strength	Major	Mechanical	-DO-	-DO-	-DO-	-DO-	P	V	R	
5.1.4	Elongation	Major	Mechanical	-DO-	-DO-	-DO-	-DO-	P	V	R	
5.1.5	Bend test	Major	Mechanical	-DO-	-DO-	-DO-	-DO-	P	V	R	
5.2	**Manufacturing of Tank and acc.**										
5.2.1	Dimension check	Major	Measurement	100%	MFR. Spec/ DRG	MFR. Spec/ DRG	MFR. Fabrication report	P	W	R	
5.2.2	Joint preparation	Major	Measurement	100%	-DO-	-DO-	-DO-	P	V	R	
5.2.3	Assembly and alignment	Major	Visual and measurement	100%	MFR. Spec/ DRG	MFR. Spec/ DRG	MFR. Fabrication report	P	V	R	
5.2.4	DP Test on Welds on	Major	DP Test	100%	-DO-	-DO-	-DO-	P	W	R	

SL NO	COMPONENT & CHARACTRISTICS	CLASS	TYPE OF CHECK	QUALITY OF CHECK	REFERENCE DOCUMENT	ACCEPTANCE NORMS	FORMAT OF RECORD	AGENCY			REMARKS
								S	M	O	
1	2	3	4	5	6	7	8	9			10
	Load bearing members eg. Jack Pads										
5.2.5	Pressure test	Major	Mechanical	On One unit	CBIP	CBIP	Test Report	--	P	W	**STAGE INSPECTION**
5.2.6	Vacuum test	Major	Mechanical	On One unit	CBIP	CBIP	Test Report	--	P	W	**STAGE INSPECTION**
5.2.7	Leakage test										
5.2.7.1	Main Unit	Major	Mechanical	100%	MFR. STD	MFR. STD	Test report	P	W	R	
5.2.7.2	Conservator	Major	Mechanical	100%	MFR. STD	MFR. STD	Test report	P	W	R	
5.2.7.3	Pipes	Major	Mechanical	100%	MFR. STD	MFR. STD	Test report	P	W	R	
5.2.8	Surface preparation	Major	Visual	100%	MFR. STD	MFR. STD	MFR. Fabrication report	P	V	R	
5.2.9	Final Paint Coat (including Primer), Thickness & Shade	Major	Measurement	100%	MFR. STD	MFR. STD	Test report	P	V	R	
5.2.10	Paint Peel off test	Major	Visual	100%	MFR. STD	MFR. STD	Test report	--	P	R	
6.0	**Porcelain insulators**										
6.1	Make and rating	Critical	Visual	100%	IS 8603/IS 2099/App.Drg.	IS 8603/IS 2099/App.Drg.	Supplier's TC	P	V	R	
6.2	Visual inspection for surface smoothness, any	Critical	Visual	100%	-DO-	-DO-	-DO-	P	V	R	

SL NO	COMPONENT & CHARACTRISTICS	CLASS	TYPE OF CHECK	QUALITY OF CHECK	REFERENCE DOCUMENT	ACCEPTANCE NORMS	FORMAT OF RECORD	AGENCY			REMARKS
								S	M	O	
1	2	3	4	5	6	7	8	9			10
	damage, etc.										
6.3	Important dimension including Creepage distance	Major	Measurement	One sample /size / lot	-DO-	-DO-	-DO-	P	V	R	
6.4	All Routine electrical tests	Major	Electrical	100%	-DO-	-DO-	-DO-	P	V	R	
7.0	**Magnetic Oil Gauge**										
7.1	Make and dimensions	Major	Physical	100%	App.Drg./ Supplier Catalogue	App.Drg./ Supplier Catalogue	Supplier's TC	P	V	R	
7.2	Test for level (eg at 30° Max)	Major	Mechanical	100%	-DO-	-DO-	-DO-	P	V	R	
7.3	Switch contact test	Major	Electrical	100%	-DO-	-DO-	-DO-	P	V	R	
7.4	Leakage test	Major	Mechanical	100%	-DO-	-DO-	-DO-	P	V	R	
7.5	Switch operating and setting	Major	Electrical	100%	-DO-	-DO-	-DO-	P	V	R	
7.6	Di-electric test at 2 KV AC between live terminal and body	Major	Electrical	100%	-DO-	-DO-	-DO-	P	V	R	
8.	**Buchholz relay**										
8.1	Make and type	Critical	Visual	100%	App.Drg./ Supplier Catalogue /IS 3637	App.Drg./ Supplier Catalogue /IS 3637	Supplier's TC	P	V	R	

SL NO	COMPONENT & CHARACTRISTICS	CLASS	TYPE OF CHECK	QUALITY OF CHECK	REFERENCE DOCUMENT	ACCEPTANCE NORMS	FORMAT OF RECORD	AGENCY			REMARKS
								S	M	O	
1	2	3	4	5	6	7	8	9			10
8.2	Bore size	Major	Measurement	One/size	-DO-	-DO-	-DO-	P	V	R	
8.3	Porosity and element test	Major	Critical	100%	-DO-	-DO-	-DO-	P	V	R	
8.4	Gas volume and surge test	Major	Mechanical	One/Size	-DO-	-DO-	-DO-	P	V	R	
8.5	HV test at 2 KV AC & IR test	Major	Electrical	100%	-DO-	-DO-	-DO-	P	V	R	
8.6	Continuity for alarm/Trip	Major	Electrical	100%	-DO-	-DO-	-DO-	P	V	R	
9.0	**Marshalling cum cooler control box**										
9.1	Dimensions	Critical	Measurement	100%	MFR. STD / App. DRG.	MFR. STD / App. DRG.	Supplier's TC	P	W	R	
9.2	Make and rating of Components	Major	Visual	100%	-DO-	App Make	Supplier's TC	P	W	R	
9.3	Functional test	Major	Electrical	100%	-DO-	MFR. STD / DRG	Supplier's TC	P	W	R	
9.4	HV test at 2 KV AC for 1 min	Major	Electrical	100%	-DO-	MFR. STD / DRG	Supplier's TC	P	W	R	
9.5	IP 55 test on marshalling cum cooler control box	Major	Environment	--	--	--	Test report	--	--	R	Supplier's Test certificate shall be submitted for review
10.0	**Radiator**										

SL NO	COMPONENT & CHARACTRISTICS	CLASS	TYPE OF CHECK	QUALITY OF CHECK	REFERENCE DOCUMENT	ACCEPTANCE NORMS	FORMAT OF RECORD	AGENCY			REMARKS
								S	M	O	
1	2	3	4	5	6	7	8	9			10
10.1	Dimension, number of sections	Major	Measurement	100%	MFR. DRG	VTD DRG	Supplier's TC	P	V	R	
10.2	Leakage Test with Air	Major	Visual	100%	As per CBIP	As per CBIP	Supplier's TC	P	V	R	
10.3	Paint shade	Major	Visual & Measurement	Random	MFR. Specs /Drg	MFR. Specs /Drg	Supplier's TC	P	V	R	
10.4	Surface Preparation	Major	Measurement	100%	SA 2.5 of ISO 8503/2	SA 2.5 of ISO 8503/2	Supplier's TC	P	V	R	
11	**OLTC and drive mechanism**										
11.1	Make, Rating and model	Major	Visual	100%	MFR. Spec/ IS 8468 /IEC 214-1989	MFR. Spec/ IS 8468 /IEC 214-1989	Supplier's TC	P	V	R	
11.2	Copper Contact surface finish	Major	Visual	100%	IS 8468	IS 8468	Supplier's TC	P	V	R	
11.3	Contact Resistance test	Major	Visual	100%	Supplier's STD	Supplier's STD	Supplier's TC	P	V	R	
11.4	Electrical Routine test	Major	Electrical	100%	IS 8468/ IEC 214	IS 8468/ IEC 214	Supplier's TC	P	V	R	
11.5	Mechanical test on diverter switch including pressure test	Major	Mechanical	100%	-DO-	-DO-	-DO-	P	V	R	
11.6	HV test for Auxiliary	Major	Electrical	100%	-DO-	-DO-	-DO-	P	V	R	

SL NO	COMPONENT & CHARACTRISTICS	CLASS	TYPE OF CHECK	QUALITY OF CHECK	REFERENCE DOCUMENT	ACCEPTANCE NORMS	FORMAT OF RECORD	AGENCY			REMARKS
								S	M	O	
1	2	3	4	5	6	7	8	9			10
	circuit										
11.7	Mechanical test on Tap selector switch with motor drive	Major	Mechanical	100%	-DO-	-DO-	-DO-	P	V	R	
11.8	Pressure test for Oil Compartment	Major	Mechanical test	100%	-DO-	-DO-	-DO-	P	V	R	
12.0	**Transformer Oil**	Major	Testing	One Sample from each lot	Annexure D of BSES spec.	Annexure D of BSES spec.	STC	P	V	R	One sample of oil shall be drawn from **each lot of Transformer** offered for final inspection by BSES representative and same shall be tested at CPRI/ERDA lab as per relevant std.
13.0	**OTI / WTI**										
13.1	Make and Model	Critical	Visual	100%	MFR. STD/App. Drg.	MFR. STD/App. Drg.	Suppliers TC	P	P	R	
13.2	Calibration	Major	Electrical	100%	-DO-	-DO-	-DO-	P	P	R	
13.3	Check for alarm & trip	Major	Electrical	100%	-DO-	-DO-	-DO-	P	P	R	

SL NO	COMPONENT & CHARACTRISTICS	CLASS	TYPE OF CHECK	QUALITY OF CHECK	REFERENCE DOCUMENT	ACCEPTANCE NORMS	FORMAT OF RECORD	AGENCY			REMARKS
								S	M	O	
1	2	3	4	5	6	7	8	9			10
	signal operation against set value										
13.4	HV test	Major	Electrical	100%	-DO-	-DO-	-DO-	P	V	R	
13.5	Switch Setting	Major	Mechanical	100%	-DO-	-DO-	-DO-	P	P	R	
14.0	**Bushing Metal parts**										
14.1	Dimension Checks	Major	Mechanical	100%	MFR. STD /IS 3347	MFR. STD /IS 3347	Supplier's TC	P	V	R	
14.2	Surface Finish	Major	Visual	100%	-DO-	-DO-	-DO-	P	V	R	
15.0	**Current Transformers**										
15.1	Dimensions, make	Major	Measurement	100%	MFR. STD /App. DRG. / IS 2705	MFR. STD /App. DRG. / IS 2705	Supplier's TC	P	P	R	
15.2	Rating and terminal marking	Major	Physical	100%	MFR. APPD. DRG	MFR. APPD. DRG	Supplier's TC	P	P	R	
15.3	Measurement of ratio and phase angle error	Major	Electrical	100%	IS 2705	IS 2705	Supplier's TC	P	V	R	
15.4	High Voltage test	Major	Electrical	100%	-DO-	-DO-	-DO-	P	V	R	
15.5	Inter-Turn insulation test	Major	Electrical	100%	-DO-	-DO-	-DO-	P	V	R	
15.6	Knee Point Voltage	Major	Electrical	100%	-DO-	-DO-	-DO-	P	V	R	Only for CI-PS CT
15.7	Excitation Current	Major	Electrical	100%	-DO-	-DO-	-DO-	P	V	R	Only for CI-PS

SL NO	COMPONENT & CHARACTRISTICS	CLASS	TYPE OF CHECK	QUALITY OF CHECK	REFERENCE DOCUMENT	ACCEPTANCE NORMS	FORMAT OF RECORD	AGENCY			REMARKS
								S	M	O	
1	2	3	4	5	6	7	8	9			10
											CT
15.8	Secondary winding resistance	Major	Electrical	100%	-DO-	-DO-	-DO-	P	V	R	Only for CI-PS CT
15.9	Polarity	Major	Electrical	100%	-DO-	-DO-	-DO-	P	V	R	
16.0	**Valves/ Butterfly valves**										
16.1	Make & operation	Critical	Visual	100%	APP.drg./MFR. STD	APP.drg./MFR. STD	Supplier's TC	P	P	R	
16.2	Leakage test for body	Major	Mechanical	100%	-DO-	-DO-	-DO-	P	P	R	
16.3	Leakage test for top spindle	Major	Mechanical	100%	-DO-	-DO-	-DO-	P	P	R	
16.4	Mounting dimensions	Major	Measurement	100%	-DO-	-DO-	-DO-	P	P	R	
16.5	Material of Body & Seat	Major	Chemical & measurement	1 sample per lot	-DO-	-DO-	-DO-	P	V	R	
17.0	**Air Cell**										
17.1	Make	Critical	Visual	100%	MFR. STD/App. drg.	MFR. STD/App. drg.	Supplier's TC	P	V	R	
17.2	Dimensional check	Major	Measurement	100%	-DO-	-DO-	-DO-	P	V	R	
17.3	Pressure test for 24 hrs. for leakage	Major	Mechanical	100%	-DO-	No Visible Damage	-DO-	P	V	R	
17.4	Inflation and deflation test (10 times)	Critical	Mechanical	100%	-DO-	-DO-	-DO-	P	V	R	

SL NO	COMPONENT & CHARACTRISTICS	CLASS	TYPE OF CHECK	QUALITY OF CHECK	REFERENCE DOCUMENT	ACCEPTANCE NORMS	FORMAT OF RECORD	AGENCY			REMARKS
								S	M	O	
1	2	3	4	5	6	7	8	9			10
18.0	**Pressure relief Valve**										
18.1	Make	Critical	Visual	100%	MFR. STD/ App. Drg.	MFR. STD/ App. Drg.	-DO-	P	P	R	
18.2	Operating pressure	Major	Mechanical	100%	-DO-	-DO-	-DO-	P	P	R	
18.3	Switch Contact test	Major	Electrical	100%	-DO-	-DO-	-DO-	P	P	R	
18.4	Mounting dimensions	Major	Measurement	100%	-DO-	-DO-	-DO-	P	V	R	
18.5	HV test between body & terminal	Major	Electrical	100%	-DO-	-DO-	-DO-	P	V	R	
19.0	**Fan Motor & Cooler Fan**										
19.1	Verification of Make & rating	Major	Physical	100%	MFR. STD/App. DRG.	MFR. STD/App. DRG.	Supplier's TC	P	V	R	
19.2	Input current power speed	Major	Electrical	100%	-DO-	-DO-	-DO-	P	V	R	
19.3	HV test at 2.0 KV	Major	Electrical	100%	-DO-	-DO-	-DO-	P	V	R	
19.4	Insulation resistance test	Major	Electrical	100%	-DO-	-DO-	-DO-	P	V	R	
20.0	**Gasket**										
20.1	Appearance & Finish	Major	Mechanical	1 sample per size per lot	IS 4253-II, 1980	IS 4253-II, 1980	Supplier's TC	P	V	R	
20.2	Hardness, IRHD	Major	Mechanical	-DO-	-DO-	-DO-	-DO-	P	V	R	
20.3	Tensile Strength	Major	Mechanical	-DO-	-DO-	-DO-	-DO-	P	V	R	

SL NO	COMPONENT & CHARACTRISTICS	CLASS	TYPE OF CHECK	QUALITY OF CHECK	REFERENCE DOCUMENT	ACCEPTANCE NORMS	FORMAT OF RECORD	AGENCY			REMARKS
								S	M	O	
1	2	3	4	5	6	7	8	9			10
20.4	Compressibility	Major	Mechanical	-DO-	-DO-	-DO-	-DO-	P	V	R	
20.5	Compression set	Major	Mechanical	-DO-	-DO-	-DO-	-DO-	P	V	R	
20.6	Flexibility	Major	Mechanical	-DO-	-DO-	-DO-	-DO-	P	V	R	
21.0	**Silica gel Breather**										
21.1	Type / model	Major	Visual	100%	MFR. STD /DRG	MFR. STD /DRG	Supplier's TC	P	V	R	
21.2	Color of Gel	Major	Visual	100%	-DO-	-DO-	-DO-	P	V	R	
B	**In Process**										
1	**Winding**										
1.1	Check for Visual, physical and dimensional Parameters and no. of parallel conductors.										
1.1.1	Measurement of axial height, OD & ID& current density calculation.	Major	Measurement	100%	MFR. Data/Drg	MFR. Data/Drg	QC report	--	P	W	
1.1.2	Copper Conductor size (Bare & covered)	Major	Measurement	100%	-DO-	-DO-	-DO-	--	P	W	
	Copper conductor finishing (free of sharp edges and have no	Major	Visual	100%	MFR. STD /DRG	MFR. STD /DRG	QC report				

SL NO	COMPONENT & CHARACTRISTICS	CLASS	TYPE OF CHECK	QUALITY OF CHECK	REFERENCE DOCUMENT	ACCEPTANCE NORMS	FORMAT OF RECORD	AGENCY			REMARKS
								S	M	O	
1	2	3	4	5	6	7	8	9			10
	burrs)										
1.1.3	No. of Turns / Disc	Major	Measurement	100%	-DO-	-DO-	-DO-	--	P	R	
1.2	Winding height	Major	Measurement	100%	-DO-	-DO-	-DO-	--	P	W	
1.3	Visual inspection of Brazed joints as applicable	Major	Visual	100%	-DO-	-DO-	-DO-	--	P	R	
1.4	Tap Leads termination in case of tap winding	Major	Visual	100%	-DO-	-DO-	-DO-	--	P	R	
1.5	Current density calculation	--	--	--	--	--	--	--	P	W	
2.0	**Core Assembly**										
2.1	Visual & Key Dimensional check										
2.1.1	Diagonal distance	Major	Measurement	100%	MFR.Drg	MFR.Drg	QC report	--	P	W	
2.1.2	Window centre distance	Major	Measurement	100%	-DO-	-DO-	-DO-	--	P	W	
2.1.3	Window height	Major	Measurement	100%	-DO-	-DO-	-DO-	--	P	W	
2.2	Stack Thickness	Major	Measurement	100%	-DO-	-DO-	-DO-	--	P	W	
2.3	High Voltage test at 2 KV AC for I min between core & core clamp, Yoke bolt	Major	Electrical	100%	-DO-	-DO-	-DO-	--	P	W	

SL NO	COMPONENT & CHARACTRISTICS	CLASS	TYPE OF CHECK	QUALITY OF CHECK	REFERENCE DOCUMENT	ACCEPTANCE NORMS	FORMAT OF RECORD	AGENCY			REMARKS
								S	M	O	
1	2	3	4	5	6	7	8	9			10
2.4	Pre-Core loss measurement	Major	Electrical	100%	-DO-	-DO-	-DO-	--	P	W	
3.0	**Core-Coil Assembly**										
3.1	Top & Bottom insulation arrangement	Major	Visual	100%	MFR.Data /DRG	MFR.Data /DRG	QC report	--	P	R	
3.2	Lead arrangement	Critical	Visual	100%	-DO-	-DO-	-DO-	--	P	R	
3.3	Tap & Lead End Brazing & Insulation	Critical	Visual	100%	-DO-	-DO-	-DO-	--	P	R	
3.4	Dimension of Coil After Shrinkage	Major	Measurement	100%	-DO-	-DO-	-DO-	--	P	R	
3.5	Verification of Major electrical clearances	Major	Visual & Measurement	100%	-DO-	-DO-	-DO-	--	P	R	
3.6	HV/LV Connection	Major	Visual	100%	-DO-	-DO-	-DO-	--	P	R	
4.0	**Core-Coil Assembly Before Ovening**										
4.1	Initial Ratio test	Major	Measurement	100%	-DO-	-DO-	-DO-	--	P	R	
5.0	**Core-coil assembly during drying**										
5.1	Measurement & recording of temperature & drying time during vacuum treatment.	Major	Visual	100%	MFR.Data /DRG	MFR.Data /DRG	QC report	--	P	R	

SL NO	COMPONENT & CHARACTRISTICS	CLASS	TYPE OF CHECK	QUALITY OF CHECK	REFERENCE DOCUMENT	ACCEPTANCE NORMS	FORMAT OF RECORD	AGENCY			REMARKS
								S	M	O	
1	2	3	4	5	6	7	8	9			10
5.2	Check for completeness of drying	Major	Visual	100%	MFR.Data /DRG	MFR.Data /DRG	QC report	--	P	R	
5.3	Certification of all test	Major	Visual	100%	MFR.Data /DRG	MFR.Data /DRG	QC report	--	P	R	
6.0	**Core-Coil Assembly After Ovening**										
6.1	Ratio Test & Magnetic Balance test	Major	Electrical	100%	-DO-	-DO-	-DO-	--	P	W	
6.2	Recording of time/Temp, Vacuum	Major	Measurement	100%	-DO-	-DO-	-DO-	--	P	R	
6.3	Record of Moisture extract	Major	Measurement	100%	MFR. STD	MFR. STD	QC report	--	P	R	
6.4	Verification of completeness & Drying	Major	Verify	100%	MFR. STD	MFR. STD	QC report	--	P	R	
6.5	Insulation resistance measurement by Megger	Major	Electrical	100%	MFR. STD	MFR. STD	Test report	--	P	R	
6.6	Earthing connection	Major	Visual	-DO-	MFR. STD	MFR. STD	QC Report	--	P	R	
7.0	**Tanking**										
7.1	Electrical clearance arrangement	Major	Measurement	100%	MFR. DRG	MFR. DRG	QC report	--	P	R	
7.2	Verification of Core-Frame Clamping	Major	Visual	100%	-DO-	-DO-	-DO-	--	P	R	

SL NO	COMPONENT & CHARACTRISTICS	CLASS	TYPE OF CHECK	QUALITY OF CHECK	REFERENCE DOCUMENT	ACCEPTANCE NORMS	FORMAT OF RECORD	AGENCY			REMARKS
								S	M	O	
1	2	3	4	5	6	7	8	9			10
	arrangement										
7.3	Core to frame insulation resistance test & HV test at 2 KV for min	Major	Electrical	100%	-DO-	-DO-	-DO-	--	P	R	
8.0	**Final Assembly for testing**										
8.1	Fittings of external accessories	Major	Visual	100%	MFR. STD /DRG	MFR. STD /DRG	Job Card	--	P	R	
8.2	Internal Oil leakage test on main unit	Major	Visual	100%	CBIP	CBIP	QC report	--	P	R	
C	**Final testing**										
1	**Routine Test**										
1.1	Voltage Ratio test	Major	Electrical	100%	IS 2026	IS 2026	Test Report	--	P	W	
1.2	Winding Resistance at all tap corrected to 75°C	Major	Electrical	100%	IS 2026	IS 2026	Test report	--	P	W	
1.3	No Load Loss & Current @90%,100%&110% of rated voltage	Major	Electrical	100%	IS 2026	IS 2026	Test report	--	P	W	To be repeated after type test.
1.4	Impedance Voltage/Short Circuit Impedance(Principal Tap) Load Loss @Principal, Max, Mini Tap	Major	Electrical	100%	IS 2026	IS 2026	Test report	--	P	W	

SL NO	COMPONENT & CHARACTRISTICS	CLASS	TYPE OF CHECK	QUALITY OF CHECK	REFERENCE DOCUMENT	ACCEPTANCE NORMS	FORMAT OF RECORD	AGENCY			REMARKS
								S	M	O	
1	2	3	4	5	6	7	8	9			10
1.5	Induced over voltage	Major	Electrical	100%	IS 2026	IS 2026	Test report	--	P	W	To be repeated after Impulse test
1.6	Separate Source Voltage Test	Major	Electrical	100%	IS 2026	IS 2026	Test report	--	P	W	
1.7	Insulation Resistance &PI(10 min / 1 min)	Major	Electrical	100%	--	--	Test report	--	P	W	By 5 KV Megger PI Shall be more than1.5
1.8	Voltage Vector Relationship & Polarity	Major	Electrical	100%	IS 2026	IS 2026	Test report	--	P	W	
1.9	Magnetic Balance Test	Major	Electrical	100%	IS 2026	IS 2026	Test report	--	P	W	
1.10	Oil leakage test	Major	Visual	100%	CBIP	CBIP	Test report	--	P	W	
1.11	Auxiliary circuit insulation test for OLTC, 2.0 KV AC for 1 min	Major	Electrical	100%	--	Withstand 2 KV for 1 min	Test report	--	P	W	
1.12	Polarity check & Ratio Test of LVWTI CT/ HVWTI CT & NCT	Major	Electrical	100%	IS 2026	IS 2026	Test report	--	P	W	
1.13	Magnetic circuit Test at 2KV between Core & Frame	Major	Electrical	100%	IS 2026	IS 2026	Test report	--	P	W	
1.14	Measurement of auxiliary	Major	Electrical	100%	IS 2026	IS 2026	Test report	--	P	W	

SL NO	COMPONENT & CHARACTRISTICS	CLASS	TYPE OF CHECK	QUALITY OF CHECK	REFERENCE DOCUMENT	ACCEPTANCE NORMS	FORMAT OF RECORD	AGENCY			REMARKS
								S	M	O	
1	2	3	4	5	6	7	8	9			10
	losses(Losses taken by Fan)										
1.15	BDV test on Transformer Oil	Major	Electrical	100%	IS 2026	IS 2026	Test report	--	P	W	
1.16	Routine Test on Tank	Major	Electrical	100%	IS 2026	IS 2026	Test report	--	P	W	
1.17	Power frequency withstand on auxiliary circuit	Major	Electrical	100%	IS 2026	IS 2026	Test report	--	P	W	
1.18	Measurement of Cap & tandelta of Wdg, Oil and HV bushing	Major	Electrical	100%	--	--	Test report	--	P	W	
1.19	Excitation & Knee point Vol. of PS Core of NCT.	Major	Electrical	100%	IS 2026	IS 2026	Test report	--	P	W	
1.20	Routine (Functional) Test on OLTC	Major	Electrical	100%	IS 2026	IS 2026	Test report	--	P	W	
1.21	SFRA	Major	Electrical	100%	IS 2026	IS 2026	Test report	--	P	W	
2.0	**Type test (One unit of each type and rating of Transformer)**										
2.1	Heat Run Test (Temp. Rise Test)	Major	Testing	One Unit	IS 2026	IS 2026	Test Report	--	P	W	
2.2	Impulse withstand Test on all HV & LV Limb for Chopped wave.	Major	Testing	One Unit	IS 2026	IS 2026	Test Report	--	P	W	
2.3	DGA Test Before & After	Major	Testing	One Unit	Relevant std.	Relevant std.	Test Report	--	P	W	

SL NO	COMPONENT & CHARACTRISTICS	CLASS	TYPE OF CHECK	QUALITY OF CHECK	REFERENCE DOCUMENT	ACCEPTANCE NORMS	FORMAT OF RECORD	AGENCY			REMARKS
								S	M	O	
1	2	3	4	5	6	7	8	9			10
	temperature rise										
2.4	Pressure relief device test	Major	Testing	One Unit	MFR. STD	MFR. STD	Test Report	--	P	W	
3.0	**Other test**										
3.1	**Marshalling cum cooler control box**										
3.1.1	BOM verification	Major	Verification	100%	App MFR.Drg	App MFR.Drg	QC report	--	P	W	
3.1.2	Operation / Continuity of Wiring with OTI, WTI operation & other accessories	Major	Electrical	100%	MFR. STD	MFR. STD	QC report	--	P	W	
3.1.3	2 KV (HV test) on Marshalling cum cooler control box	Major	Electrical	100%	MFR. STD	MFR. STD	QC report	--	P	W	
3.1.4	Operation of Instruments(BR)	Major	Electrical	100%	MFR. STD	MFR. STD	QC report	--	P	W	
3.1.5	Visual & Dimensional check	Major	Measurement	100%	APPD MFR.Drg.	APPD MFR.Drg.	QC report	--	P	W	
4.0	**Special Test (One unit of each type and rating of Transformer)**										
4.1	Zero Phase Sequence Test	Major	Testing	One Unit	IS 2026	IS 2026	Test Report	--	P	W	
4.2	Noise Level Test	Major	Testing	One Unit	NEMA TR-1	NEMA TR-1	Test Report	--	P	W	
4.3	No Load Harmonic Test	Major	Testing	One Unit	IS 2026	IS 2026	Test Report	--	P	W	

SL NO	COMPONENT & CHARACTRISTICS	CLASS	TYPE OF CHECK	QUALITY OF CHECK	REFERENCE DOCUMENT	ACCEPTANCE NORMS	FORMAT OF RECORD	AGENCY			REMARKS
								S	M	O	
1	2	3	4	5	6	7	8	9			10
4.4	HV Test on all auxiliary equipment and wiring after complete assembly	Major	Testing	One Unit	--	--	Test Report	--	P	W	
D	**Dispatch & Packing**										
1.1	Identification & packing	Major	Visual	100%	As per packing list	As per packing list	Packing List	--	P	--	
1.2	Check for proper Packing	Major	Visual	100%	As per packing list	As per packing list	Packing List	--	P	--	
1.3	Visual check before dispatch	Major	Visual	100%	As per packing list	As per packing list	Packing List	--	P	--	

LEGEND:

S: Supplier
M: Main Contractor (Manufacturer)
O: Owner (BYPL)

P - Perform
V - Verify
R – Review
W- Witness

ANNEXURE – G – TECHNICAL SPECIFICATION OF MATERIAL TRACKING -GPS DEVICE

Supply of GPS Device shall be in Vendors scope, however it shall be returned to Vendor once Goods are received.

Detailed requirement of GPS Device is as below:

Once the material is dispatched after Final clearance Transport Vehicle shall have GPS Tracking Device and status of dispatch of material shall be sent to all the stake holders via SMS thru GPS Device.

Approve make is Map my India Asset Tracking device.

SCHEDULE – A –GUARANTEED TECHNICAL PARTICULARS (DATA BY SELLER)

Sr.No.	Particular	Specified / Required	Offered
1.0	General		
1.1	Make		
1.2	Type	As per Annexure C of specification	
2.0	Nominal continuous rating, KVA		
2.1	ONAN	As per Cl 11.1 of Annexure C	
2.2	ONAF	As per Cl 11.2 of Annexure C	
3.0	Rated voltage (KV)		
3.1	HV winding	As per Cl 9.1 of Annexure C	
3.2	LV winding	As per Cl 9.2 of Annexure C	
4.0	Rated current (Amps)		
4.1	HV winding, ONAN / ONAF		
4.2	LV winding , ONAN / ONAF		
5.0	Connections		
5.1	HV winding	As per Annexure C of specification	
5.2	LV winding	As per Annexure C of specification	
5.3	Vector group reference	Dyn11	
6.0	Impedance at principal tap rated current and frequency%		
6.1	Impedance (%)	As per Cl. 12.0 of Annexure C	
6.2	Reactance (%)		
6.3	Resistance (%)		
6.4	Impedance at lowest tap rated current and frequency		
6.5	Impedance at highest tap rated current and frequency		
6.6	Transformer X/R ratio		
7.0	Resistance of the winding at 75^0C at principal tap (ohm)		
7.1	a) HV		
7.2	b)LV		
8.0	Zero sequence impedance (Ohm)		
8.1	a) HV		
8.2	b) LV		
9.0	Guaranteed maximum losses at principal tap at full load and 75^0 C without any positive tolerance kW		
9.1	No load losses (max.)	As per Cl 13.0 Annexure C	
9.2	Load losses (max.)	As per Cl 14.0 Annexure C	
9.3	Cooler fan losses (max.)		
9.4	Total I^2R losses of windings @ 75 deg C		
9.5	Total stray losses @ 75 deg C		

9.6	Total losses (max.)		
9.7	No load loss at maximum permissible voltage and frequency (approx.) kW		
10.0	Temperature rise over reference design ambient of 40 ^{0}C		
10.1	Top oil by thermometer ^{0}C	40^0 C	
10.2	Winding by resistance ^{0}C	45^0 C	
10.3	Winding gradient at rated current ^{0}C		
10.3.1	HV		
10.3.2	LV		
11.0	Efficiency		
11.1	Efficiency at 75^0 C and unity power factor %		
11.1.1	At 110% load		
11.1.2	At 100% load		
11.1.3	At 80% load	Not less than 99.5 %	
11.1.4	At 60% load		
11.1.5	At 40% load		
11.1.6	At 20% load		
11.2	Efficiency at 75^0 C and 0.8 power factor lag %		
11.2.1	At 110% load		
11.2.2	At 100% load		
11.2.3	At 80% load		
11.2.4	At 60% load	Not less than 99.5 %	
11.2.5	At 40% load		
11.2.6	At 20% load		
11.3	Maximum efficiency %		
11.4	Load and power factor at which Max efficiency occurs		
12.0	Regulation (%)		
12.1	Regulation at full load at 75^0 C		
12.1.1	At unity power factor		
12.1.2	At 0.8 power factor lagging		
12.2	Regulation at 110% load at 75^0 C		
12.2.1	At unity power factor		
12.2.2	At 0.8 power factor lagging		
13.0	Tapping		
13.1	Type		
13.2	Capacity		
13.3	Range-steps x % variation	As per Annexure C of specification	
13.4	Taps provided on HV winding (Yes/No)	Yes	
14.0	OLTC gear		
14.1	Make		
14.2	Type		
14.3	Reference std		

14.4	No of compartment		
14.5	Mounting arrangement	Side mounted type although External Intank Type is also preferable	
14.6	Rated current Amp		
14.7	Rated step capacity, kVA		
14.8	Short circuit withstand for 2 secs, kA		
14.9	Time required for one step change sec.		
14.10	Rated voltage for motor, V AC		
14.11	Rating of motor		
14.12	Rated voltage for auxiliaries V		
14.13	Consumption of auxiliaries		
14.14	OLTC features as per specification, Yes/No		
14.15	Does the overload rating of OLTC match with that of the transformer under all conditions Yes/No		
16.0	Cooling system		
16.1	Type of cooling	As per Annexure C of specification	
16.2	No. of cooling unit groups		
16.3	Capacity of cooling units		
16.4	Mounting of radiators		
16.5	Number of radiators and Size		
16.6	Type & size of radiator header main valve		
16.7	Type & size of individual radiator valve		
16.8	Total radiating surface, sq mm		
16.9	Thickness of radiator tubes, mm	Minimum 1.2 mm	
16.10	Schematic flow diagram of the cooling system furnished (Yes/No)		
16.11	Type and make of Fan motor		
16.12	No. of fan motor per bank (Working + Standby)		
16.13	Rated Power Input (kW)		
16.14	Rated Voltage, Speed of Motor		
16.15	Efficiency of motor at Full load(%)		
16.16	Locked Rotor current(Amps)		
17.0	Details of tank		
17.1	Material	Robust mild steel plate without pitting and low carbon content	
17.2	Thickness of sides mm		
17.3	Thickness of bottom mm		
17.4	Thickness of cover mm		
17.5	Confirmation of tank designed and tested for vacuum pressure (Ref: CBIP manual) (Yes/No)		
17.5.1	Vacuum mm of Hg. / (kN/m^2)	As per CBIP	

17.5.2	Pressure mm of Hg	Twice the normal head of oil / normal pressure + 35 kN/m^2 whichever is lower , As per CBIP	
17.6	Is the tank lid slopped?	Yes	
17.7	Inspection cover provided (Yes/No)		
17.8	Location of inspection cover (Yes/No)		
17.9	Min. dimensions of inspection cover (provide list of all inspection cover with dimension), mm x mm		
18.0	Core		
18.1	Type:	Core	
18.2	Core material grade	Premium grade minimum M3 or better	
18.3	Thickness of lamination mm	Max. 0.23 mm with insulating coating on both sides	
18.4	Insulation between core lamination		
18.5	Design flux density of the core at rated condition at principal tap,Tesla		
18.6	Maximum flux density allowed in the core at extreme over excitation / overfluxing , Tesla		
18.7	Equivalent cross section area of core, mm^2		
18.8	Guaranteed No load current at 90% / 100% / 110% rated voltage & frequency (Amp)	@ 100% - 0.5% of RFLC @ 110% - 1.0% of RFLC	
18.8.1	HV		
18.8.2	LV		
19.0	Type of winding		
19.1	HV		
19.2	LV		
19.3	Conductor material	Electrolytic copper as per relevant standard	
19.4	Maximum current density allowed, Amp per mm^2	As per Annexure C	
19.5	Gauge/area of cross section of conductor, mm^2		
19.5.1	HV		
19.5.2	LV		
19.6	Maximum current density achieved in winding (LV/HV/HVT) – Amps/ mm^2		
19.7	Insulating material type		
19.7.1	HV turn		
19.7.2	LV turn		
19.7.3	LV- core		
19.7.4	HV-LV		

19.8	Insulating material thickness, mm		
19.8.1	HV turn		
a.	Thickness		
b.	Thermal class		
c.	Dielectric strength		
d.	Moisture content		
e.	Thermal stability		
19.8.2	LV turn	-	
a.	Thickness		
b.	Thermal class		
c.	Dielectric strength		
d.	Moisture content		
e.	Thermal stability		
19.8.3	LV to core		
a.	Thickness		
b.	Thermal class		
c.	Dielectric strength		
d.	Moisture content		
e.	Thermal stability		
19.8.4	HV to LV		
a.	Thickness		
b.	Thermal class		
c.	Dielectric strength		
d.	Moisture content		
e.	Thermal stability		
20.0	Minimum design clearance , mm		
20.1	HV to earth in air		
20.2	HV to earth in oil		
20.3	LV to earth in air		
20.4	LV to earth in oil	-	
20.5	Between HV & LV in Air		
20.6	Between HV & LV in oil		
20.7	Top winding and yoke	-	
20.8	Bottom winding and yoke		
21.0	Insulating oil		
21.1	Quantity of oil Ltrs	-	
21.1.1	In the transformer tank		
21.1.2	In each radiator		
21.1.3	In OLTC chamber		
21.1.4	Total quantity		
21.2	10% excess oil furnished?	Yes	
21.3	Type of oil	New insulating oil as per IS: 335, latest edition and Cl. 4.2.7 of the specification	
21.4	Oil preservation system provided (Yes/No)		

22.0	Bushing		
22.1	Make		
22.2	Type		
22.3	Reference standard		
22.4	Voltage class, kV		
22.4.1	HV side bushing		
22.4.2	LV side line and neutral bushing		
22.5	Creepage factor for all bushing mm / kV	As per Annexure C of specification	
22.6	Rated current , Amp		
22.6.1	HV bushing		
22.6.2	LV line and neutral bushing		
22.7	Rated thermal short current		
22.7.1	HV bushing	As per Annexure C of specification	
22.7.2	LV line and neutral bushing	As per Annexure C of specification	
22.8	Weight Kg		
22.8.1	HV bushing		
22.8.2	LV line and neutral bushing		
22.9	Free space required for bushing removal, mm		
22.9.1	HV bushing		
22.9.2	LV line and neutral bushing		
23.0	Terminal connections		
23.1	HV	As per Annexure C of specification	
23.2	LV	As per Annexure C of specification	
23.3	LV Neutral	As per Annexure C of specification	
24.0	H.V. Cable box/Terminals		
24.1	Suitable for cable/conductor type size	As per Annexure C of specification	
24.2	Termination height , mm	1000 mm , minimum	
24.3	Gland plate dimension mm x mm		
24.4	Gland plate material	Aluminium	
24.5	Gland plate thickness , mm	5 mm minimum	
24.6	Phase to clearance inside box / terminals , mm		
24.7	Phase to earth inside box / terminals , mm		
24.8	Cable box door arrangement as per clause 4.2.9.2		
25.0	L.V line side cable box		
25.1	Suitable for cable type , size	As per Annexure C of specification	
25.2	Termination height , mm	1000 mm , minimum	
25.3	Gland plate dimension mm x mm		
25.4	Gland plate material	Aluminum	
25.5	Gland plate thickness , mm	5 mm minimum	
25.6	Phase to clearance inside box / terminals , mm		

25.7	Phase to earth inside box , mm					
25.8	Cable box door arrangement as per clause 4.2.9.2					
26.0	LV Neutral cable box					
26.1	Suitable for cable type , size	As per Annexure C of specification				
26.2	Termination height , mm					
26.3	Gland plate dimension mm x mm					
26.4	Gland plate material	Aluminum				
26.5	Gland plate thickness , mm	5 mm minimum				
26.6	Phase to clearance inside box, mm					
26.7	Phase to earth inside box , mm					
27.0	Marshalling box cubical provided as per clause no. 4.2.11 of spec. (Yes / no)					
27.1	Mounting of marshalling box	Separate mounted				
28.0	Neutral Current Transformer (NCT)					
28.1	Type					
28.2	Make					
28.3	Reference standard					
28.4	Rated Voltage	12kV				
28.5	CT Ratios	20/25 MVA, Dyn11		25/31.5 MVA, Dyn11		
		Core 1	Core 2	Core 1	Core 2	
		1600/1 A	1600/1A	1600-2000/1 A	1600-2000/1 A	
28.6	Burden ,VA	-	20	-	20	
28.7	Class of Accuracy	PS	5P20	PS	5P20	
28.8	KPV , volts , minimum	40(Rct +8)	-	40(Rct+ 8)	-	
28.9	Resistance, ohm @ 75 deg C, maximum	1	-	1	-	
28.10	Magnetizing current @ Vk/4 , mA , maximum	30	-	100	-	
28.11	Short time withstand current	26.3 kA for 3 sec.				
29.0	Winding current transformer (WCT)					
29.1	Type					
29.2	Make					
29.3	Reference standard					
29.4	CT ratio					
29.5	Burden ,VA	Manufacturer Std.				
29.6	Class of accuracy	Manufacturer Std.				
30.0	Pressure release device					
30.1	Minimum pressure the device is set to rupture					

30.1.1	For main tank		
30.1.2	For OLTC		
31.0	Alarm and trip contact ratings of protective devices		
31.1	Rated/making/ breaking currents , Amp @ voltage for		
31.1.1	PRV for main tank		
31.1.2	PRV for OLTC		
31.1.3	Buchholz relay		
31.1.4	Oil surge relay for OLTC		
31.1.5	Sudden pressure relay		
31.1.6	OTI		
31.1.7	WTI		
31.1.8	Magnetic oil gauge		
32.0	Fittings accessories each transformer furnished as per clause No. (Bidder shall attach separate sheet giving details, make and bill of materials)		
33.0	Painting: as per clause for the transformer , cable boxes, radiator, marshalling box, etc (Yes/No)		
34.0	Over all transformer dimensions		
34.1	Length , mm	6.5 metres maximum	
34.2	Breadth , mm	5.0 metres maximum	
34.3	Height , mm	5.0 metres maximum	
35.0	Transformer tank dimensions		
35.1	Length , mm		
35.2	Breadth , mm		
35.3	Height , mm		
36.0	Marshalling box dimensions		
36.1	Length , mm		
36.2	Breadth , mm		
36.3	Height , mm		
37.0	Weight data		
37.1	Core, kG		
37.2	Frame parts, kG		
37.3	Core and frame, kG		
37.4	Total winding, kG		
37.5	Core and frame winding, kG		
37.6	Tank, kG		
37.7	Tank lid, kG		
37.8	Empty conservator tank , kG		
37.9	Each radiator empty , kG		
37.10	Total weight of all radiator empty , kG		
37.11	Weight of oil in tank , kG		

37.12	Weight of oil in each conservator , kG		
37.13	Weight of oil in each radiators , kG		
37.14	Total weight of oil in radiator , kG		
37.15	OLTC gear including oil , kG		
37.16	Total transport weight of the transformer , kG		
37.17	Total transport weight of the transformer with OLTC and all accessories		
38.0	Volume data		
38.1	Volume of oil in main tank , liters		
38.2	Volume of oil between highest and lowest levels of main conservator ,liters		
38.3	Volume of oil between highest and lowest levels of OLTC conservator, liters		
38.4	Volume of oil in each radiator , liters		
38.5	Total volume of oil in radiators , liters		
38.6	Volume of oil in OLTC , liters		
38.7	Transformer total oil volume , liters		
39.0	Shipping data		
39.1	Weight of heaviest package, kG		
39.2	Dimensions of the largest package (L x B x H) mm		
40.0	Tests		
40.1	All in process tests confirmed as per Cl. (Yes /No)		
40.2	All types tests confirmed as per Cl. (Yes /No)		
40.3	All in routine tests confirmed as per Cl. (Yes /No)		
40.4	All in special tests confirmed as per Cl. (Yes /No)		

SCHEDULE – B –GUARANTEED TECHNICAL PERTICULARS OF TRANSFORMER OIL

Bidder to submit hard copy duly filled & signed along with techno commercial offer. Bidder to submit separate GTP for each type of insulating oil

S no	Item description	Specification requirement	Data by Vendor
1.0	Manufacturer Name		
1.1		Address	
1.2		Contact person	
1.3		Contact telephone no	
2.0	**Function**		
2.1	Viscosity		
2.1.1	Viscosity at 40^0C	15 mm^2/s, Max	
2.1.2	Viscosity at 0^0C	1800 mm^2/s, Max	
2.2	Pour Point	- 10^0C, Max	
2.3	Water content	30 mg/Kg, Max	
2.4	Breakdown voltage		
2.4.1	New unfiltered oil	30 kV, Min	
2.4.2	After filtration	70 kV, Min	
2.5	Density at 20^0C	0.895 g/ml, Max	
2.6	Dielectric dissipation factor at 90^0C	0.005, Max	
2.7	Particle Content	Manufacturer to specify the data	
3.0	**Refining/Stability**		
3.1	Appearance of oil	Clear, free from sediment and suspended matter	
3.2	Acidity	0.01 mg KOH/g, Max	
3.3	Interfacial tension at 27^0C	0.04 N/m, Min	
3.4	Total sulphur content	Manufacturer to specify the data	
3.5	Corrosive sulfur	Not-corrosive	
3.6	Potentially Corrosive sulfur	Not-corrosive	
3.7	DBDS	Not detectable (<5 mg/kg)	
3.8	Inhibitor	Not detectable (<0.01%)	
3.9	Metal Passivator	Not detectable (<5 mg/kg)	
3.10	Other additives	Manufacturer to specify the data	
3.11	2-furfural and related Compounds	Not detectable	

	content	(<0.05 mg/kg) for each individual compound	
4.0	**Performance**		
4.1	Oxidation stability, test duration 164 h		
4.1.1	Total acidity	1.2 mg KOH/g, Max	
4.1.2	Sludge	0.8%, Max	
4.1.3	DDF at 90^0C	0.5, Max	
4.2	Gassing Tendency	Manufacturer to specify the data	
4.3	ECT	Manufacturer to specify the data	
5.0	**Health, safety and Environment**		
5.1	Flash point	135^0C, Min	
5.2	PCA content Max	3%, Max	
5.3	PCB content	Not detectable (<2 mg/Kg)	

SCHEDULE – C–RECOMMENDED SPARES (DATA BY SUPPLIER)

List of recommended spares as following –

Sr No	Description of spare part	Unit	Quantity
1		No	
2		No	
3			
4			
5			
6			
7			

Annexure-E

BSES

Technical Specification of Nitrogen Injection Fire Protection System (NIFPS)

Specification no - BRPL-TS-24-NIFP-R0

Revision		R0
Date		25-Nov-2024
Pages		14
Prepared by:	Javed Ahmed	
Reviewed by:	Abhinav Srivastava	
Approved by:	Gopal Nariya	

Generic Technical Specifications of the Nitrogen Injection Fire Prevention and Extinguishing System (NIFPES) applicable for Oil filled Transformers and Reactors

1. Introduction

1.1 Electrical transformers are the main pillars of the power system network for enabling the transformation of voltage/ current and conveyance of electrical energy (electricity) so that the Utilities are able to supply electricity to consumers with a good degree of reliability and quality. At the same time, the Utilities endeavour to keep their assets in safe and secure conditions by providing protective equipment/systems which would help in properly maintaining the health and preventing damage to the equipment.

1.2 Any failure of transformer would have an adverse impact on the supply of power and satisfactory operation and performance of the power system. In cases involving fire in transformers, power outages, damage to assets, life and property are the common consequences. Transformer may fail because of many reasons, sometimes the failure of transformer leads to the emergence of fire, which becomes quite dangerous resulting into loss of assets, nearby equipment, living beings, and ecology. NIFPES is one of the measures to prevent and extinguish the fire taking place in the transformers.

2. Scope

2.1 Nitrogen Injection Fire Prevention and Extinguishing System (NIFPES) provided by the manufacturer/ vendor shall be complete in all respects. The scope shall cover design, supply, installation, connections, testing, commissioning and after-sales service of the system all associated items specified in these specifications.

2.2 The scope also includes the provision of heat/ fire detectors (sensors) herein after referred as the detector, required pipes, cable connections etc.

2.3 All other components meant for activation and successful operation of the NIFPES shall be provided by the manufacturer.

2.4 Transformer manufacturer/client will provide all the necessary support for the effective installation of NIFPES to each other and the purchaser shall make available the required transformer tripping signals as needed for the successful functioning of the NIFPES. Requisite drawings etc will also be provided by the utilities/manufacturer of the transformer/reactor (to the OEM of NIFPES).

3. Specifications

3.1 Nitrogen Injection Fire Prevention and Extinguishing System (NIFPES) shall be designed to prevent the fire from taking place in the transformer and possible explosion of the transformer tank due to internal faults/ arcing etc. In case of fire inside the transformer tank, the NIFPES shall be capable of mitigating the fire, minimizing the damage to the transformer and thus avoiding the spread of fire.

3.2 NIFPES system shall work on the principle of 'drain and stir' method of transformer oil. On activation of NIFPES, it shall isolate conservator tank oil from the oil in the main transformer tank, drain a pre-determined quantity of oil from the tank top through drain valve to reduce the tank pressure, and inject nitrogen gas from the bottom side of the tank through the inlet valves to create stirring action and reduce the temperature of oil to prevent/ mitigate the fire. On the operation of NIFPES, the quantity of oil removed from the tank shall be such that adequate amount of oil shall remain in the transformer to cover the active part of the transformer i.e. the 'core-coil' assembly. The NIFPES shall be designed in such a way that in case of external fire, the NIFPES may be operated manually, after electrically isolating the transformers from all sides. During operation of NIFPES, the oil flow pumps should also be tripped in case of OFAF/OFWF cooling of transformers in line with discussion with the end user / utilities.

3.3 The detection set point of the detector shall be site configurable.

3.4 Electrical isolation of transformer through master trip in addition to breakers shall be an essential pre-condition for activation of NIFPES

3.5 Operational Controls

The system operation shall be automatic and shall be activated when the pre-set conditions of activation of the system are attained / triggered. .The maximum time period for extinction of fire from commencement of nitrogen injection into the transformer shall be 30 second. In addition to automatic operation, facility for remote operation from the control room / remote control center (RCC) and manual operation from the Fire Extinguishing Cubicle (FEC) shall also be provided. The system shall operate in the following situations:

3.5.1 System Activation in Fire Prevention Mode

3.5.1.1 To prevent fire and explosion in the transformer including that from internal fault/ arcing, signals from the following shall be used to activate the NIFPES:

(i) Operation of any of the protective relays i.e. differential or restricted earth fault (REF) or over current;

AND

(ii) Operation of any of the protective relays [Buchholz Relay or Pressure Relief Valve (PRV) or the signal from Rapid Pressure Rise Relay (RPRR)]

AND

(iii)Operation / Feedback of tripping of associated circuit breakers or Master Trip

3.5.1.2 Transformer shall be electrically isolated and then only the NIFPES shall operate. In case of some problem in main protection system, the NIFPES shall derive the activation signal from the backup protection system.

3.5.1.3 The exact logic for operation of NIFPES activation shall be finalized during detailed engineering and in consultation with the end user.

3.5.2 System Activation in Fire Detection Mode

3.5.2.1 In case of fire detection mode, signals from the following shall be used to activate the NIFPES:

(i) Heat / fire detectors (sensors);

AND

(ii) Operation of any of the protective relays [Buchholz relay or Pressure Relief Valve (PRV) or Rapid Pressure Rise Relay (RPRR)]

AND

(iii) Operation / Feedback of tripping of associated circuit breakers or Master Trip

3.5.2.2 Transformer shall be electrically isolated and then only the NIFPES shall operate. In case of some problem in main protection system the NIFPES shall derive the activation signals from the backup protection system.

3.5.2.3 The exact logic for system activation in fire detection mode shall be finalized during detailed engineering and in consultation with the end user.

3.5.3 Manual operation switch with a proper cover to avoid inadvertent operation of the switch, shall be provided in the control room / remote center and in FEC. Interlock shall be provided so that manual operation shall work only when the transformer is completely electrically isolated. NIFPES shall operate once the circuit breakers are isolated and feedback signal for isolation of breakers is received on NIFPES panel. The manual operation of NIFPES shall override the automatic operational mode and the operator shall ensure the complete isolation of the transformer before activation of the NIFPES.

3.5.4 The NIFPES manufacturer should provide the warning information on the Control Box and Fire Extinguishing Cubicle (FEC) that *"Ensure that HV, IV and LV breakers are open before operating in Manual Mode"* both in Hindi and English and the local language as prevalent.

3.6 Operation of System

3.6.1 On receiving the activation signal, the system shall:

i. Open the quick opening drain valve of the transformer to drain its top layer oil (pre-determined quantity) and shut off the transformer conservator isolation valve (TCIV) to prevent flow of oil from the conservator tank to the main transformer tank; and
ii. Open the valve to inject Nitrogen into the transformer tank to create stirring of oil.

3.6.2 There shall be interlock to prevent activation of the NIFPES, if the transformer is not

electrically isolated. There shall also be provision for isolating the NIFPES during maintenance and /or testing of the transformer.

3.6.3 The system shall be designed in such a manner that Nitrogen purging shall commence only after ensuring that the oil draining and TCIV operation has commenced.

3.7 Technical Particulars

3.7.1 The OEM of NIFPES shall be responsible for design of the complete system and shall submit the drawings and design calculations for the number of detectors, sizing of drain pipe, Nitrogen injection pipe, Nitrogen cylinder capacity, number of injection points etc and get approval from the user. The facility shall be provided to test the system by operation of valves [Nitrogen injection valve, TCIV and Oil Drain Valve (ODV)] when the transformer is in service, without actually draining the oil and injecting Nitrogen in real time operation by obtaining the feedback signal from the valve. The Nitrogen injection scheme shall be designed in such a way that the Nitrogen shall not enter the transformer tank even in case of passing/leakage of valve.

3.7.2 The oil drain mechanism may or may not be a part of the fire extinguishing cubicle.

3.7.3 The user shall provide two distinct station auxiliary DC / AC supplies for control power supply purposes. The system shall work on station DC / AC supply with voltage variation as per relevant standards. The control box of nitrogen injection fire prevention and extinguishing system shall have facility to receive these DC / AC supplies for auto changeover of supply. It shall be the Supplier's/ NIFPES OEM's responsibility to further distribute power to the required locations. In case system operational DC / AC power supply requirement is different than station auxiliary DC / AC supply, then all necessary converters shall be provided by the NIFPES OEM.

3.7.4 Following minimum indications and alarms shall be provided in the control cubicle in the control room:

(a) DC supply 'ON'
(b) AC supply 'ON'
(c) Total System Healthy
(d) DC supply fail
(e) AC supply fail
(f) System out of Service
(g) Differential relay trip
(h) Restricted Earth Fault (E/F) Relay Trip
(i) Overcurrent Relay Trip
(j) PRV trip / RPRR trip
(k) Buchholz Relay trip
(l) Master Relay trip [(HV, IV and LV (Tertiary Voltage)]
(m) Nitrogen cylinder pressure low
(n) Pre-Fire alarm

(o) Heat / Fire detector / Sensor faulty Signal
(p) Heat / Fire Detector / Sensor alarm signal
(q) Nitrogen injection Valve open
(r) Nitrogen injection Valve close
(s) Nitrogen injection Valve leakage
(t) Oil drain Valve open
(u) Oil drain Valve Close
(v) Leakage in Oil drain valve
(w) TCIV Open
(x) TCIV Closed
(y) Cable fault signal for interconnecting cable for transformer trip signals
(z) Auto operation failed
(aa) NIFPES system in Auto Mode
(bb) NIFPES system in Manual Mode
(cc) NIFPES system in Test / Maintenance mode

3.7.5 Other indicators, which supplier / user consider necessary shall also be provided.

3.7.6 The following push buttons shall be provided as a minimum:

(a) Mode Selection Switch, Auto / Manual / (test / Off)
(b) Lamp test push buttons
(c) System reset push button
(d) Detector reset push button, if applicable.
(e) Manual extinction push-button for manual operation of the system
(f) Hooter reset push button

3.7.7 The above indications may be in the form of Lamps / Annunciator Window / Human Machine Interface (HMI) as desired by end user.
3.7.8 Apart from the above list, Nitrogen cylinder pressure indication manometer with adequate number of adjustable 'Normally Opened (NO)' contacts shall also be provided in FEC. In addition to manometer for local reading a transmitter shall also be provided to monitor the reading to be displayed on control box in control room.
3.7.9 In case of fire in the transformer and fulfilling the conditions of defined logic for NIFPES operation for fire extinguishing mode or fire prevention mode, alarm (Audio & Visual) will be available in control room.

3.8 Technical Data Sheet:

3.8.1 The following are the technical requirements of the NIFPES:

Sl. No.	Item	Requirements
1.	Fire detection period on commencement of fire	Maximum 10 second
2.	Fire Extinction period on commencement of Nitrogen	Maximum 30 second

	injection	
3.	Fire detectors'/ sensors' "heat sensing" temperature	Flash point temperature of the transformer oil minus 5 ^{0}C with tolerance of +/- 2^{0}C.
4.	Power supply source (uninterrupted) for: a) Control Box b) Fire extinguishing cubicle	110/220 V DC (+10% /-15%) / 230 V AC 110/220 V DC (+10%/-15%) / 230 V AC
5.	Nitrogen Cylinder and Valve (PESO approved)	Cylinder as per IS:7285 (Part 2) and Valve as per IS:3224 (latest) both having the BIS Mark
6.	Nominal Cylinder Pressure	150 kg /cm^2 (+/- 10%)
7.	Minimum Cylinder Pressure for refilling	50 kg /cm^2
8.	Degree of protection of: (a) FEC (b) Heat (fire) detector / sensor and Signal / Junction box	(a) IP 65 (b) IP 65
9.	Steel Sheet of FEC, Control Box and Signal Box	All panels shall be fabricated from corrosion resistance Stainless Steel (SS 304) grade. The thickness of sheet shall be 3.0 mm minimum.
10.	Color of all panels and Nitrogen Injection pipes	Shade 538 of IS: 5
11.	Heat (fire) detector / sensor	OEM shall furnish the technical details
12.	Minimum distance of FEC from the Transformer	FEC should be at a safe distance from Transformer (preferably 5-7 meters). Firewall (minimum 2 hrs fire withstand capacity) will be provided around FEC with the height of 600 mm from the top of FEC to protect it from fire of the transformer.
13.	For conservator valve of flow-based mechanism, flow rate for closing of flow-based conservator isolation valve	Between 60-70 Ltrs. / Minute (lpm).
14.	Pipes (Oil Drain and Nitrogen Injection)	MS, GI coated, Class C as per IS: 1239, latest Standard.

3.8.2 In case the pressure in the nitrogen cylinder exceeds the rated pressure, there shall be a provision for extracting the excess nitrogen to attain the safe pressure in the nitrogen cylinder.

3.9 Details of Supply of System/ Equipment and Other Related Activities:

3.9.1 The fire extinguishing cubicle (FEC) with base frame and containing at least the following. (However, all other components that are necessary for fast, reliable and effective

working of the fire protection system shall deemed to be included in the scope of supply):

(i) Nitrogen gas cylinder and cylinder valve having the Petroleum and Explosive Safety Organization (PESO) certificates of sufficient capacity.
(ii) Pressure regulator with indicators for nitrogen pressure of the cylinder and actual injection pressure through nitrogen cylinder and manometer with sufficient number of adjustable 'Normally Open (NO)' contacts.
(iii) Oil Drain Assembly including oil drain valve and its equipment for operation, oil drain pipe extension of suitable size and strength for connecting pipes to Oil Storage Tank, along with level switch / oil seepage detecting sensor for detecting leakage in oil drain valve;
(iv) Mechanical release device for oil drain and nitrogen gas release;
(v) Limit switches for monitoring of the systems;
(vi) Panel lighting;
(vii) Flanges on top of the panel for connecting oil drain in case of oil drain mechanism is part of fire extinguishing cubicle (FEC) and nitrogen injection pipes for transformer;
(viii) Fire Extinguishing Cubicle (FEC) shall have proper illumination.
(ix) The heater with thermostat shall be provided in the FEC. Heater shall be operated as per the setting of the thermostat.
(x) Mandatory spares as applicable.

In case, oil drain mechanism is not a part of FEC – the related items shall be as per the Original Equipment Manufacturer's (OEM's) design however, the functional requirements shall have to be met.

The FEC shall be provided with canopy / shed protected from 3 sides to avoid water ingress and protect the FEC from direct sunlight and radiant heat. The canopy / shed shall be designed to cover almost more than half of the FEC height from top.

3.9.2 Control box / cubicle shall be installed in the control room of the substation for monitoring the NIFPES operation, automatic control and remote operation with alarms, indications, switches, push buttons, audio signal etc. Control Box / Cubicle should be microprocessor based / Programmable Logic controller (PLC) based, compatible to be interfaced with user's Supervisory Control and Data Acquisition (SCADA) system in the Substation / Switchyard.

3.9.3 The required number of detectors shall be located at strategic locations as finalized during detailed engineering. The location of detector shall be as per the design of OEM.

3.9.4 All the control / power cables between the NIFPES panel and the transformer, shall be Fire Survival Cable type up to the thermal limit (in case of fire and or explosion). Fire survival cables shall be suitable to withstand a temperature of 750 °C. Further, Technical Data sheet and applicable valid type test report as per applicable latest IS shall be submitted to the user during detailed engineering.

All cables shall be laid in GI conduits / pipes, if desired by the user.

3.9.5 Transformer Conservator Isolation Valve (TCIV) shall isolate the conservator oil from the main tank's oil. This valve shall be located in the piping between the conservator and the Buchholz relay.

3.9.6 The nitrogen gas cylinder shall be of sufficient capacity considering the actual quantity of the transformer oil. The margin of safety shall be 3 times the oil to be drained (as per OEM design), for example if the oil quantity to be drained is 1500 litres (i.e. 1.5 m^3) then 4.5 m^3 volume of nitrogen is required. Considering the rated pressure of the gas filled in the cylinder as150 kg/cm^2, accordingly the capacity of the nitrogen cylinder shall be decided by the OEM of NIFPES in consultation with transformer manufacturer.

3.9.7 SCADA compatibility

i. The NIFPES shall be provided with IEC 61850 / RS 485 / TCP IP compatible port or using suitable converters for integration with user's SCADA system.

ii. The ethernet switch, patch cord, Light Interface Unit (LIU) and Fibre Optic (FO) cable are not included in the present scope.

3.9.8 Drain Oil Storage Tank

A drain oil storage tank for each transformer shall be provided at suitable location with appropriate construction material having appropriate capacity (as decided by the user). All precautions shall be taken so that there is no overflow/spill of the drained oil. Design of the drain system and storage thereof to be provided by the OEM. In case the user has his own design of the drainage system, he can opt for the same.

4.0 Tests

i. Factory Acceptance Test (FAT)

Functional verification of the offered parameters of NIFPES shall be conducted at the works of NIFPES manufacturer. The Test procedure shall be as per **Annexure – A.**

ii. Type Test for Detector:

Type test report of the detector shall be submitted to the user along with the design/drawing documents. The detector shall be tested as per the procedure given below:

Test	Type	Procedure	Requirement	Observed Value

Testing of the detector	Type of the detector along with its make and model number is to be mentioned in this column	1. Detector is to be tested by immersing it in the heating liquid with temperature measurement arrangement or by suspending in hot air oven with temperature measurement. 2. The temperature of the liquid / air is to be increased at the rate of 1 ^{0}C per minute and reading of the thermocouples to be noted. 3. Thermocouple for measuring the temperature is to be provided at the tip / surface of the detector. 4. The temperature of the liquid / air is to be increased till the detector activates.	The detector shall activate at the flash point temperature of the transformer oil minus 5 ^{0}C with tolerance of +/- 2^{0}C	The temperature, at which the detector activates, is to be recorded.

iii. Site Acceptance Test (SAT) /Performance Test

a) SAT / Performance test of the NIFPES shall be carried out after the completion of installation at site. It shall also be ensured that the interfacing of NIFPES with SCADA has been completed by the user before SAT. These tests shall include simulation and verification of the response of the complete system without actual draining of the oil and injection of the Nitrogen gas. In addition to the above, additional mutually agreed tests as considered necessary shall be conducted. SAT shall also include to test the provisions as specified in Para-3.6 "**Operation of System**" above.

b) SAT shall also include demonstration of the system checking by simulation method when transformer is in online condition as mentioned in Para- 3.7 "**Technical Particulars**" above.

c) For flow based TCIV vendor to demonstrate the locking / closing of TCIV valve at specified flow rate as per technical data sheet. Necessary arrangements to demonstrate the requisite flow rate and measuring instruments as required shall be made available by OEM for conducting SAT.

d) Installation and pre-commissioning test after installation of the system shall be carried out jointly by the OEM and the user's representative before the system is put in service. All the system checks as per approved SAT procedure shall be performed to the satisfaction level of the end user / client.

Annexure – A

Format for the Factory Acceptance Test

1. **Visual Inspection:** Visual examination of the NIFPES equipment i.e. Fire Extinguishing Cubicle, Control box/cubicle, Signal Box, Transformer Conservator Isolation Valve, heat/fire detectors, cables, etc shall be made as per the approved drawings.

2. **Functional Test:** Functional test shall be carried out on one (1) set out of the total manufactured lot for the respective order as minimum in presence of user / user nominated inspection agency. Following are the list of critical items to be used in FAT out of manufactured lot for the respective Purchaser Order:

   (i) Fire Extinguishing Cubicle with its internals, Nitrogen cylinder meant for internal testing can be used during FAT testing. However, connection of cylinder shall be in line with regulator valve intended for dispatch.
   (ii) Control Box with its internal components and accessories.
   (iii) Signal box with its internal components and accessories.
   (iv) Detector
   (v) TCIV Valve.
   (vi) ODV Valve.
   (vii) SCADA compatibility of all the signals over RS 485 / IEC protocol as applicable.
   (viii) Pressure and leakage test on Oil storage Tank

3. Functional Test of Transformer Isolation Conservator Valve (TCIV):

Sl. No.	Test	Procedure	Requirement	Remarks
1.	Leakage Test	Immerse the TCIV (Valve body) in the oil at the inlet pressure of 4 kg/cm^2 for 6 hours.	There should be no leakage from TCIV body	
2.	TCIV Close test (A or B as per the Design of TCIV)	**A.** For oil flow rate based TCIV: i. Mount TCIV with approx. 3 degree inclination on test jig ii. Switch ON oil Pump iii. Increase oil flow rate gradually	➢ TCIV should close at flow rate specified herein. ➢ Flap closing shall be visible through transparent glass inspection window. ➢ Normally open (NO) contacts in TCIV should close / TCIV Close indication in control Box should be reflected.	

		B. For electrically operated TCIV: i. Mount TCIV with approximately 3 degree inclination on test jig ii. Generate a set of input signal for the activation of NIFPES system.	➢ TCIV should close. ➢ Flap closing shall be visible through transparent glass inspection window. ➢ Normally open (NO) contactsin TCIV should close/TCIV Close indication in control Box should be reflected.	
3.	Reset Test	Reset the TCIV in the normal position.	➢ Close contact in TCIV should become open/ TCIV open indication in control Box should be reflected. ➢ Flap opening shall be visible through transparent glass inspection window.	
4.	High voltage test	Apply 2 kV AC for 1 minute between terminals and body of TCIV	TCIV should withstand.	

4. Functional Tests for detector:

4.1 The operating temperature shall be as per the requirement mentioned in technical data sheet.

4.2 Live demonstration test: To verify the working of the system, live demonstration is to be conducted in both fire prevention and extinguishing mode. Following are to be ensured:

(i) Demonstration is to be carried out at the works of NIFPES Manufacturer. It shall be the responsibility of NIFPES manufacturer to arrange a suitable location for live testing.

(ii) A dummy tank of minimum 5000 litres oil capacity and filled with oil, should be used as a transformer tank for testing.

(iii) The detector for testing shall be placed as per the design of OEM.

(iv) The FEC and Control Box manufactured for the said Purchase Order are to be used for live testing.

(v) Separate filled Nitrogen cylinder should be used for live tests.

(vi) Testing shall be conducted as per procedure mentioned below:

5. Testing in Fire Prevention Mode

5.1 Procedure:

(i) Oil Drain Pipe, Nitrogen Injection pipe, FEC, Control box / Cubicle, Signal box, TCIV, oil storage tank with all necessary pipes and cable

connections shall be connected with transformer tank.

(ii) Nitrogen gas Cylinder pressure should be recorded.

(iii) The NIFPES System shall be made ON.

(iv) Any one set of input of the fire prevention mode shall be generated by a suitable method.

5.2 Observations/ Results:

(i) After fulfilling of required condition, system gets activated in auto mode.

(ii) Oil Drain shall be started and TCIV shall start closing.

(iii) Nitrogen should be injected.

5.2.1 Following Indications on control box will turn on:

a)	Differential trip / PRV trip/RPRR trip / Buchholz Relay trip / Master Relay trip [HV, IV and LV to ensure that the Circuit Breakers are open] Restricted Earth Fault (REF) Relay Trip / Overcurrent Relay Trip as per logic
b)	Nitrogen Injection valve open
c)	Oil Drain valve open
d)	TCIV Valve closed
e)	Audio Alarm activated

5.2.2 For flow based TCIV valve the LPM at which it closes shall be measured, which shall be in line as mentioned in technical specifications, and the recorded values to be noted.

5.3 Testing in Fire Detection Mode (By igniting the transformer oil of the tank)

5.3.1 **Procedure:**

i. There should be an opening on the dummy transformer tank to ignite the transformer oil.

ii. The detector for testing shall be placed as per the design of OEM.

iii. Oil Drain Pipe, Nitrogen Injection pipe, FEC, Control box, Signal box, TCIV, oil pit with all necessary pipes and cable connections shall be connected with dummy transformer tank.

iv. The NIFPES shall be made ON.

v. The Buchholz Relay or PRV or RPRR Trip and Master Relay trip (HV, IV and LV) Signal shall be activated by a suitable method.

vi. Ignite the transformer oil by any method such as pouring any flammable liquid or any suitable chemical spray and igniting the flame.

vii. Note the time taken between commencement of fire and fire detection (Fire Alarm signal is received) takes place.

viii. Note the time taken between commencement of Nitrogen injection and fire gets extinguished.

5.3.2 **Observations:**

(i) After fulfilling of required conditions of fire extinguishing mode system should get activated in auto fire extinguishing mode.
(ii) TCIV shall start closing and Oil Drain should start.
(iii) Nitrogen injection shall begin.
(iv) Following Indications on control box will turn on:

i)	PRV trip/RPRR trip / Buchholz Relay trip / Master Relay trip [HV, IV and LV] / Fire / Heat Detector as per logic
ii)	Nitrogen Injection valve open
iii)	Oil Drain valve open
iv)	TCIV Valve closed
v)	Audio Alarm activated

5.3.3 **Results:**

Sl. No.	Details	Requirement	Observations
1.	Fire detection period upon commencement of Fire	Maximum 10 seconds	..... Seconds
2.	Fire Extinction period on commencement of Nitrogen injection	Maximum 30 seconds	..... Seconds

****

BSES Rajdhani Power Limited
BSES Bhawan, Nehru Place, New Delhi- 19

TECHNICAL SPECIFICATION

FOR

STRUCTURAL WORK

Prepared by	Alok Mandal	for Mittal	Rev: 0
Reviewed by	Uttam Shukla	U Shukla	Date: 21.11.2025
Approved by	Deepti Sharma	U Shukla	

Scanned with CamScanner

Technical Specification Structural Work

1.0 GENERAL

1.1 The scope of specification covers design fabrication, proto assembly, supply and erection of galvanized steel structures for towers, girders, and equipment support structures, towers which shall be lattice type structures fabricated from structural steel conforming to IS: 2062(latest) The scope shall include supply and erection of all types of structures including bolts, nuts, washers, hangers, shackles, clamps, anti climbing devices, bird guards, step bolts, inserts in concrete, gusset plates equipment mounting bolts, structure earthing bolts, foundation bolts, spring and flat washers, fixing plates and any other items as required to complete the job.

1.2 The connection of all structures to their foundations shall be by base plates and embedded anchor/foundation bolts. All steel structures and anchor anchor/foundation bolts shall be galvanized. The weight of the zinc coating shall be at least 0.610 Kg/m2 for anchor bolts/foundation bolts and for structural members. One additional nut shall be provided below the base plate which may be used for the purpose of leveling.

2.0 DESIGN REQUIREMENTS FOR STRUCTURES

2.1 For design of steel structures loads such as dead loads, live loads, wind loads etc. shall be based on IS: 802 Part 1 Sec 1

2.2 For material and permissible stresses IS: 802, Part-1, Section-2 shall be followed in general. However additional requirements given in following paragraphs shall be also considered.

2.3 Minimum thickness of galvanized tower member shall be as follows:

Member	Minimum thickness (mm)
Leg members, ground wire Peak members/main members	5
Other members	4
Redundant members	4

2.4 Maximum slenderness ratios for leg members, other stressed members and redundant members for compression force shall be as per IS-802

2.5 Minimum distance from hole center to edge to adjacent hole shall be minimum 1.5 X bolt diameter. Minimum distance between center to center of holes shall be 2.5 x bolt diameter.

2.6 The minimum bolt diameter shall be 16 mm.

2.7 Step Bolts

In order to facilitate inspection and maintenance, the structures shall be provided with climbing devices. Each tower shall be provided with step bolts not less than 16mm diameter and 175mm long spaced not more than 450mm apart, staggered on faces on one leg extending from about 0.5M above ground level to the top of the tower. The step bolt shall conform to IS: 10238

2.8 Design Criteria

a) All structures be designed for the worst combination of dead loads, live loads, wind loads as per code IS 802 seismic forces as per code IS : 1893, importance factor of 1.5, loads due to deviation of conductor, load due to unbalanced tension in conductor, torsion load due to unbalanced vertical and horizontal forces, erection loads, short circuit forces shall be calculated considering a fault level of 31.5KA for 3 secs. IEC-865 may be followed for evaluation of short circuit forces.

b) Switchyard girders structure shall be designed for the two conditions i.e. normal condition and short circuit condition. In both conditions the design of all structures shall be based on the assumption that stringing is done only on one side i.e. all the three (phase) conductors broken on the other side. Factor of safety of 2.0 under normal conditions and 1.5 under short circuit condition shall be considered on all external loads for the design of switchyard structures, which are of lattice type.

c) Vertical load of half the span of conductors/string and the earth wires on either side of the beam shall be taken into account for the purpose of design. Weight of man with tools shall be considered as 150KGs for the design of structures.

d) Terminal / line take off girders shall be designed for a minimum conductor tension of 1000Kg per sub conductor per phase for 66KV. The distance between terminal girders and the dead end tower shall be taken as per standard. The design of these terminal girders shall also be checked considering +/- 30 deg deviation of conductor in both vertical and horizontal planes. For other girders the structural layout requirements shall be adopted in design.

e) The girders shall be connected with lattice columns be bolted joints.

f) All support structures used for supporting equipments shall be designed for the worst combination of dead loads, erection load. Wind load/seismic forces, short circuit forces. Short circuit forces shall be calculated considering a fault level of 31.5KA for 3 seconds.

g) Foundation bolts shall be designed for the loads for which the structures are designed

3.0 DESIGN DRAWINGS, BILL OF MATERIAL & DOCUMENTS

3.1 The contractor shall furnish design, drawing and BOMs to the Owner after award of the contract. However contractor shall have to prepare and submit any other drawings, bill of material additionally required during design and construction stage which the Owner feels necessary. In case Owner feels that any design drawing, BOM are to be modified even after its approval, contractor shall modify the design & drawings and resubmit the design drawing, BOM as required in the specification.

3.2 The fabrication drawings are to be provided and furnished by the contractor shall be based on design approved by Owner. These fabrication drawings shall be based on the design approved by the Owner. These fabrication drawings shall indicate complete details of fabrication and erection including all erection splicing details, lacing details, weld sizes and lengths. BOM in the Performa approved by the Owner shall be submitted. Bolt details and all customary details in accordance with standard structural engineering practice whether or not given by the Owner.

3.3 The fabrication work shall start only after the final approval to the design and drawings is accorded by the Owner. The design drawing should indicate not only profile, but section, numbers and sizes of bolts and details of typical joints.

3.4 Such approval shall however not relieve the contractor his responsibility for the safety of the structure and good connections and any loss or damage occurring due to defective fabrication design or workmanship shall be borne by the contractor.

4.0 FABRICATION OF STEEL MEMBERS

4.1 The fabrication and erection works shall be carried out generally in accordance with IS 802. A reference however may be made to IS 800 in case of non-stipulation of some particular provision in IS 802. All materials shall be completely shop fabricated and finished with proper connection material and erection marks for ready assembly in the field.

5.0 PROTO – ASSEMBLY

5.1 The component parts shall be assembled in such a manner that are neither twisted not otherwise damaged and shall be so prepared that the specific camber, if any, is provided. In order to minimize distortion in member the component parts shall be positioned by using the clamps, Clips, lugs, jigs and other suitable means and fasteners (bolts and weld) shall be placed in a balanced pattern. If the individual components are to be bolted, paralleled and tapered drifts shall be used to align the part so that the bolts can be accurately positioned.

5.2 Sample towers, beams and lightning masts and equipment structures shall be trial assembled in the fabrication shop and shall be inspected and cleared by contractor based on the design approval accorded by the Owner before mass fabrication.

5.3 Pursuant to above the BOM's along with proto-corrected fabrication drawing shall be prepared and submitted by the main vendor to Owner as document for information. Such BOM, which shall be the basis for the Owner to carry out inspection.

6.0 BOLTING

6.1 Every bolt shall be provided with two flat and one spring washer under the nut so that no part of the threaded portion of the bolt is within the thickness of the parts bolted together. Locking nut shall be provided with each grouting bolt.

6.2 All steel items, bolts, nuts and washers shall be hot dip galvanized.

6.3 2.0% extra nuts and bolts shall be supplied for erection.

7.0 WELDING

7.1 The work shall be done as per approved fabrication drawings, which clearly indicate various details of joints to be welded, type of weld, length and size of weld, whether shop or site weld etc. Symbols for welding on erection and shop drawings shall be according to IS 813. Efforts shall be made to reduce site welding so as to avoid improper joints due to constructional difficulties.

8.0 FOUNDATION BOLTS

8.1 Foundation bolts for the towers and equipment supporting structures and elsewhere shall be embedded in first stage concrete while the foundation is cast. The contractor shall ensure the proper alignment of these bolts to match the holes in the base plate.

8.2 The contractor shall be responsible for the correct alignment and leveling of all steel work on site to ensure that the towers/structures are plumb.

8.3 All foundation bolts for lattice structures are to be supplied by the contractor.

8.4 All foundation bolts shall be fully galvanized so as to achieve 0.610 kg. Per Sq.m. of Zinc coating as per specifications.

8.5 All foundation bolts shall conform to IS 5624 but the material shall be MS conforming to IS 2062.

9.0 STABILITY OF STRUCTURES

The method of grouting the column bases shall be subject to approval of Owner and shall be such as to ensure complete uniformity of contact over the whole area of the steel base. The contractor will be fully responsible for the grouting operations.

10.0 GROUTING

The method of grouting the column bases shall be subject to approval of Owner and shall be such as to ensure complete uniformity of contact over the whole area of the steel base. The contractor will be fully responsible for the grouting operations.

11.0 GALVANISING

11.1 All structural steel works and support shall be galvanized after fabrication.

11.2 Zinc required for galvanizing shall have to be arranged by the manufacturer. Purity of zinc to be used shall be 99.95% as per IS 209.

11.3 The contractor shall be required to make arrangement for frequent inspection by the Owner as well as continuous inspection by a resident representative of the Owner, if so desired for fabrication work.

12.0 TOUCH UP PAINTING

The touch up primers and paint shall consist of Zinc phosphate / Zinc chromate conforming to the requirements of IS 2074 with a pigment to be specified by the Owner.

13.0 INSPECTION BEFORE DESPATCH

13.1 Each part of the fabricated steel work shall be inspected as per approved quality plans and certified by the Owner or his authorized representative as satisfactory before it is dispatched to the erection site.

13.2 Such certification shall not relieve the contractor of his responsibility regarding adequacy and completeness of fabrication.

14.0 TEST CERTIFICATE

Copies of all test certificates relating to material by the contractor for the works shall be forwarded to the Owner.

15.0 ERECTION

The contractor should arrange on his own all plant and equipment, welding set, tools and tackles, scaffolding, trestles equipments and all other accessories and ancillaries required for carrying out erection without causing any stresses in the members which may cause deformation and permanent damage.

16.0 SAFETY & PRECAUTION

The contractor shall strictly follow at all fabrication, transportation and erection of steel structures, raw m, materials and other tools and tackles, the stipulations contained in Indian standard code for safety during erection of structural steel work.

17.0 DEVIATIONS

Deviation from this specification, if any, shall be clearly brought out in the offer. Unless owner explicitly accepts such deviations, it shall be considered that the offer fully complies with the specification.

Technical Specification

Of

Lightning Arrester

Specification no – BSES-TS-308-LIGAR-R0

Rev:		0
Date:		10 Oct 2025
Prepared by	Hemanshi Kaul	
Reviewed by	Uttam Shukla	
Approved by	Deepti Sharma	

Index

1.0 General Specification…… 03-08

2.0 Annexure – A : Scope & Documentation……09-10

3.0 Annexure – B : Ambient Conditions……....11-11

4.0 Annexure – C1 : Guaranteed Tech. Particulars for 66KV Lightning Arrester.....12-14

5.0 Annexure – C2 : Guaranteed Tech. Particulars for 33KV Lightning Arrester…..15-17

6.0 Annexure – D : Recommended spares (Data by supplier)……18-18

General Specification

1.0.0 Codes & Standards

Materials, equipment and methods used in the manufacture of Lightning Arresters shall conform to the latest edition of following –

National Standards

Standard Code	Standard Description
	Indian Electricity Rules
	Indian electricity act
	CBIP manual
IS : 3070 – Part 3	Lightning Arresters for Alternating Current Systems
IS : 2071 - Part I	Method of high voltage testing
IS : 2629 - 1985	Recommended Practice for Hot-Dip Galvanizing of Iron and Steel
IS : 5621 - 1980	Hollow insulators for use in electrical equipment
IS : 6639 - 1972	Specification for Hexagon Bolts for Steel Structures

International Standards

Standard Code	Standard Description
IEC 60099-4-2001	Metal-Oxide Surge Arresters without gaps for AC Systems

Important Note :

In the event of direct conflict between various order documents, the precedence of authority of documents shall be as follows –

i. Specification including applicable codes, standards
ii. Guaranteed Technical Particulars (GTP)
iii. Approved Vendor Drawings

Sr. No.	Description	Requirement / Rating
2.0.0	**Design Features**	Common for both 66KV and 33 KV Lightning Arresters
2.1.0	Application	To be used for protection of transformers, circuit breakers and other sub-station equipment against lightning and switching surges.
2.2.0	Type of Lightning Arrester	Gap-less metal oxide type (ZnO Type).
2.3.0	Pressure relief device	Pressure relief device of class 40 KA shall be provided.
2.4.0	Accessories	Refer Annexure-A : Scope of Supply.
2.5.0	Mounting	LA mounting vertically on steel structures with insulating bases. Surge counters in weather proof enclosures suitable for mounting on structure of lightning arrester.
2.6.0	Line side Terminal Connectors	Suitable for ACSR Zebra/ Goat conductor (Refer GTP)
2.7.0	Ground Terminal Connectors	Suitable for 50x6 mm GS flat
2.8.0	Surge Counter	Non-resettable type
2.9.0	Name plate Marking	Following minimum information must be marked – i) Name of the manufacturer ii) Type and serial No. iii) Model No. iv) Rated voltage v) Max. continuous Operating Voltage vi) Nominal discharge current vii) Pr. Relief Class viii) Identification mark on each separately housed unit to enable it to be replaced in correct position after the multiunit arrester has been dismantled.
3.0.0	**Approved Make of Components**	Common for both 66KV and 33 KV Lightning Arresters
3.1.0	Insulators	JSI / WSI/ BHEL/ Modern/ Saravana

Sr. No.	Description	Requirement / Rating
4.0.0	**Testing & Inspection**	
4.1.0	Internal Test	Manufacturer shall carry out comprehensive inspection and testing during manufacture of the equipment.
4.2.0	Type test	The product must be of type tested quality. Type test reports shall be submitted for the type, size & rating of equipment offered along with bid. If the manufacturer's lab is accredited by govt./ authorised body then it shall be acceptable for type testing.
4.3.0	Routine test	As per relevant IS / IEC.
4.4.0	Acceptance test	As per relevant IS / IEC.
4.5.0	Test Witness	
4.5.1		The Buyer reserves the right to witness all tests specified on completed product.
4.5.2		The Buyer reserves the right to inspect the product at the Sellers works at any time prior to dispatch, to verify compliance with the specifications.
4.5.3		In-process and final inspection call intimation shall be given in advance to purchaser.
4.6.0	Tests on fitting and Accessories	As per Manufacturer's Standards and relevant IS / IEC.
5.0.0	**Drawing, Data & Manuals**	
5.1.0	To be submitted along with bid	The seller has to submit :
	i)	Tentative GA / cross sectional drawing of product showing all the views / sections.
	ii)	Detailed reference list of customers already using the offered product during the last 5 years with particular emphasis on units of similar design and rating.
	iii)	Completely filled GTP
	iv)	Deviations from this specification. Only deviations approved in writing before award of contract shall be accepted.
	v)	Details of manufacturer's quality assurance standards and program and ISO 9000 series or equivalent national certification.

Sr. No.	Description	Requirement / Rating
	vi)	Type test reports shall be submitted for the type, size & rating of product / equipment offered along with bid. In case the type test report for identical product is not available then type test report of nearby size/ rating shall be submitted for review. They shall be considered valid for 5 years from date of test performed on product /equipment.
	vii)	Complete product catalogue and Manual along with the bid.
	viii)	Recommended spare parts and consumable items for five years of operation with prices and spare parts catalogue with price list for future requirements
	ix)	Bill of material with make, model & quantity of items.
5.2.0	To be submitted after award of contract	The seller has to submit : for buyer's Approval (A) / Reference (R)
	i)	Program for production and testing (A)
	ii)	Guaranteed Technical Particulars (A)
	iii)	Calculations to substantiate choice of electrical, structural, mechanical component size / ratings (A)
	iv)	a) Detailed dimension drawing for all components, ge b) Drawings of major components (A) c) Rating and diagram plate (R)
	v)	Detailed loading drawing to enable the buyer to design and construct foundations (as applicable) (R)
	vi)	Transport / Shipping dimensions with weights (R)
	vii)	Detailed Bill of Materials for all fittings and accessories with their make, model & tag no. etc. (A)
	viii)	Detailed installation and commissioning instructions (R)
	ix)	Quality plan (A)
5.3.0	Submittals required prior to dispatch	The seller has to submit :
	i)	Inspection and test reports, carried out in manufacturer's works (R)
	ii)	Test certificates of all bought out items
	iii)	Operation and maintenance Instruction as well as trouble shooting charts/ manuals
5.4.0	Drawing and document sizes	Standard size paper A0, A1, A2, A3, A4
5.5.0	No of drgs. / Documents required at different stages	As per Annexure- A

Sr. No.	Description	Requirement / Rating
6.0.0	**Packing**	
6.1.0	Packing Protection	Against corrosion, dampness, heavy rains, breakage and vibration
6.2.0	Packing for accessories and spares	Robust wooden non returnable packing case with all the above protection & identification Label
6.3.0	Packing Identification Label	In each packing case, following details are required :
	i)	Individual serial number
	ii)	Purchaser's name
	iii)	PO number (along with SAP item code, if any) & date
	iv)	Equipment Tag no. (if any)
	v)	Destination
	vi)	Manufacturer / Supplier's name
	vii)	Address of Manufacturer / Supplier / it's agent
	viii)	Description and Quantity
	ix)	Country of origin
	x)	Month & year of Manufacturing
	xi)	Case measurements
	xii)	Gross and net weights in kilograms
	xiii)	All necessary slinging and stacking instructions
7.0.0	**Shipping, Handling & Storage**	
7.1.0	Shipping Information	The seller shall give complete shipping information concerning weight, size etc. of each package.
7.2.0	Shipping Constraints	The seller shall ascertain at an early date before the commencement of manufacture, any transport limitations such as weights, dimensions, road culverts, overhead lines, free access etc. from the manufacturing plant to the project site. Bidder shall furnish the confirmation that the proposed packages can be safely transported, as normal or oversize packages, upto the site. Any modifications required in the infrastructure and cost thereof in this connection shall be brought to the notice of the Purchaser.
7.3.0	Transit Damage	The seller shall be responsible for any transit damage due to improper packing.
7.4.0	Handling & Storage	Manufacturer's instructions shall be followed. Detail handling & storage instruction sheet / manual needs to be furnished before commencement of supply.

Sr. No.	Description	Requirement / Rating
8.0.0	**Quality Assurance**	
8.1.0	Vendor quality plan	To be submitted for purchaser approval
8.2.0	Inspection points	To be mutually identified & agreed in quality plan
9.0.0	**Progress Reporting**	
9.1.0	Outline Document	To be submitted for purchaser approval for outline of production, inspection, testing, inspection, packing, dispatch, documentation program
9.2.0	Detailed Progress report	To be submitted to Purchaser once a month containing
	i)	Progress on material procurement
	ii)	Progress on fabrication (As applicable)
	iii)	Progress on assembly (As applicable)
	iv)	Progress on internal stage inspection
	v)	Reason for any delay in total program
	vi)	Details of test failures if any in manufacturing stages
	vii)	Progress on final box up
	viii)	Constraints / Forward path
10.0.0	**Deviations**	
	i)	Deviations from this Specification are only acceptable where the Seller has listed in his quotation the requirements he can't or does not wish to comply with and the buyer has accepted in writing the deviations before the order is placed.
	ii)	In the absence of a list of deviations, it will be assumed by the Buyer that the Seller complies fully with this specification.

Annexure – A

1.0 Scope

Sr. No.	Description	Requirement / Rating
1.0.0	**Scope**	
1.1.0	Main Equipment	Design, manufacture, assembly & testing at manufacturer's works before dispatch, packing & delivery of Lightning Arresters rated up to 66 kV.
1.2.0	Accessories	
	i)	Supporting insulators for LA.
	ii)	Line terminal connectors.
	iii)	Surge counter with leakage current ammeter.
	iv)	Grounding terminal bracket
	v)	Necessary flanges alongwith all stainless steel hardware like nut bolts/ washers etc. for mounting of LA & surge Counter
	vi)	Suitably sized Cu flat or insulated copper cable for connection between LA and surge counter
	vii)	Any other item necessary or usual for efficient performance and satisfactory maintenance under the various operating and atmospheric conditions
1.3.0	Documentation	Submission of all drawings & documents pertaining to the equipment.
1.4.0	Site Supervision	Supervision of testing & commissioning of equipment at site.
1.5.0	Bill of Materials	Complete bill of materials shall be submitted in the following format.

Sr. No.	Purchaser Equipment Tag No. / Sap Code	Equipment Description	Location / Substation Name	Unit	Quantity
			e.g. Santacruz	Nos.	e.g. 1
			e.g. Alaknanda	Nos.	e.g. 6

2.0.0 Document Submission

Submission of drawings, calculations, catalogues, manuals, test reports shall be as follows :

Item Description	Along with offer	For Approval after award of contract	Final after approval	Remarks
Drawings	3 copies (Typical drgs)	4 copies + 1 Soft Copy	6 copies + 1 soft copy in CD	See Clause 5.0.0 for various drawings required
Calculations	3 copies (Typical)	4 copies + 1 Soft Copy	6 copies + 1 soft copy in CD	See Clause 5.0.0 for details
Catalogues	1 copy		6 copies + 1 soft copy in CD	
Instruction manual	1 copy		6 copies + 1 soft copy in CD	
Test Report	2 copies		6 copies + 1 soft copy in CD	Type test and routine test reports

3.0.0 Delivery Schedule

Sr. No.	Description	Requirement / Rating
i)	Delivery period start date	From date of purchase order
ii)	Delivery period end date	As agreed with supplier
iii)	Material dispatch clearance	After inspection by purchaser

Annexure – B

Ambient Conditions :

A) Mumbai

a)	Average grade atmosphere	Heavily polluted , salt Laden, dusty, humid with possibility of condensation
b)	Maximum altitude above sea level	1000 M
c)	Ambient Air temperature	Highest 45 deg C, Average 35 deg C
d)	Minimum ambient air temperature	20 deg C
e)	Relative Humidity	100 % Max
f)	Thermal Resistivity of Soil	150 Deg. C cm/W
g)	Seismic Zone	3
h)	Rainfall	3000 mm concentrated in four months

B) Delhi

a)	Average grade atmosphere	Heavily polluted, dry
b)	Maximum altitude above sea level	1000 M
c)	Ambient Air temperature	Highest 50 deg C, Average 40 deg C
d)	Minimum ambient air temperature	0 Deg C
e)	Relative Humidity	100 % Max
f)	Thermal Resistivity of Soil	150 Deg. C cm/W
g)	Seismic Zone	4
h)	Rainfall	750 mm concentrated in four months

Annexure – C1

Guaranteed Tech. Particulars for 66KV Lightning Arrester

Sr. No.	Description	Data By Purchaser	Data by Supplier
1	Name of manufacturer		
2	Type	Gapless, ZnO type, single pole, heavy duty, station class, pedestal mounted	
3	Model		
4	No. of units.		
5	Installation	Outdoor	
6	Application	Protection of Transformers, circuit breakers, lines and other outdoor S/S equipment.	
7	LA connection to system	Phase to earth	
8	Type of Conductor	ACSR Zebra / Goat	
9	Construction	Single Phase	
10	Rated voltage of arrester (KVrms)	60 KV	
11	Nominal discharge current (Amps) (8x20 micro sec. wave) peak value	10KA	
12	System Particulars		
i)	Highest System Voltage	72.5 KV	
ii)	Frequency	50HZ ± 5%	
iii)	System neutral	Solidly earthed	
iv)	Max. value of temporary over voltage & its max. duration		
	- Insulation level of equipment to be protected	325 KVp	
	- System short circuit level	31.5KA for 3 seconds.	
13	Maximum continuous operating voltage (MCOV)	52KV	
14	Impulse withstand current	100KAp	
15	Long Duration discharge class	3	
16	Minimum single impulse energy capability		
17	Maximum residual voltage at switching impulse current of 1KAp (30/60 micro sec. wave)	136 KVp	

Sr. No.	Description	Data By Purchaser	Data by Supplier
18	Max. residual voltage (1x20 micro sec. wave)		
i)	At 05 KAp		
ii)	At 10 KAp		
iii)	At 20 KAp		
19	Minimum creepage distance	31 mm/KV	
20	Pressure relief class	40KA	
21	Reference current (mA)		
22	Leakage current at COV (mA)		
	Resistive		
	Capacitive		
23	Dry and wet power frequency withstand voltage of arrester insulation (KVrms)		
24	Virtual steepness for front of wave for above (KV/micro sec.)		
25	Ratio of system voltage withstand level to protection level of surge arrester		
26	High current impulse withstand 4/10 micro second peak value (KV)		
27	Long duration current Impulse		
i)	Current peak.		
ii)	Virtual duration.		
28	Temporary Over Voltage Capacity (KVp)		
i)	At 0.1 Sec.		
ii)	At 1.0 Sec.		
iii)	At 10.0 Sec.		
iv)	At 100.0 Sec.		
29	Weight of complete unit (Kg)		
30	Height of complete unit from base to the line side (mm)		
31	Minimum recommended spacing between arresters Centro to Centro (mm)		
32	Clearance required from ground equipment at various heights of arresters unit (mm)		

Sr. No.	Description	Data By Purchaser	Data by Supplier
33	Earthing arrangement provided for earthing side of arresters.		
34	Mounting flanges dimensional details.		
35	Type and range of milli-ampere meter.		
36	Type and specifications of the surge connecters.		
37	Surge counter min. current for recording a lightning stroke	200 Amp	
38	Surge counter max. disch. Current withstand	100KA peak for 4/10 wave shape.	
39	Range of continuous leakage current at rated voltage with variation due to change in temperature & frequency		
40	Size and length of flexible Cu cable for connection between LA & surge counter		
41	Voltage time curve for thermal stability of LA after a stroke	To be provided	
42	Paint shade of surge counter housing	Polyurethane, 692 of IS-5	

Annexure – C2

Guaranteed Tech. Particulars for 33KV Lightning Arrester

Sr. No.	Description	Data By Purchaser	Data by Supplier
1	Name of manufacturer		
2	Type	Gapless, ZnO type, single pole, heavy duty, station class, pedestal mounted	
3	Model		
4	No. of units.		
5	Installation	Outdoor	
6	Application	Protection of Transformers, circuit breakers, lines and other outdoor S/S equipment.	
7	LA connection to system	Phase to earth	
8	Type of Conductor	ACSR Zebra / Goat	
9	Construction	Single Phase	
10	Rated voltage of arrester (KVrms)	30 KV	
11	Nominal discharge current (Amps) (8x20 micro sec. wave) peak value	10KA	
12	System Particulars		
i)	Highest System Voltage	36 KV	
ii)	Frequency	50HZ ± 5%	
iii)	System neutral	Solidly earthed	
iv)	Max. value of temporary over voltage & its max. duration		
	- Insulation level of equipment to be protected	170 KVp	
	- System short circuit level	26.3KA for 3 seconds.	
13	Maximum continuous operating voltage (MCOV)	25KV	
14	Impulse withstand current	100KAp	
15	Long Duration discharge class	3	
16	Minimum single impulse energy capability		
17	Maximum residual voltage at switching impulse current of 1KAp (30/60 micro sec. wave)	70 KVp	

Sr. No.	Description	Data By Purchaser	Data by Supplier
18	Max. residual voltage (1x20 micro sec. wave)		
i)	At 05 KAp		
ii)	At 10 KAp		
iii)	At 20 KAp		
19	Minimum creepage distance	31 mm/KV	
20	Pressure relief class	40KA	
21	Reference current (mA)		
22	Leakage current at COV (mA)		
	Resistive		
	Capacitive		
23	Dry and wet power frequency withstand voltage of arrester insulation (KVrms)		
24	Virtual steepness for front of wave for above (KV/micro sec.)		
25	Ratio of system voltage withstand level to protection level of surge arrester		
26	High current impulse withstand 4/10 micro second peak value (KV)		
27	Long duration current Impulse		
i)	Current peak.		
ii)	Virtual duration.		
28	Temporary Over Voltage Capacity (KVp)		
i)	At 0.1 Sec.		
ii)	At 1.0 Sec.		
iii)	At 10.0 Sec.		
iv)	At 100.0 Sec.		
29	Weight of complete unit (Kg)		
30	Height of complete unit from base to the line side (mm)		
31	Minimum recommended spacing between arresters Centro to Centro (mm)		
32	Clearance required from ground equipment at various heights of arresters unit (mm)		

Sr. No.	Description	Data By Purchaser	Data by Supplier
33	Earthing arrangement provided for earthing side of arresters.		
34	Mounting flanges dimensional details.		
35	Type and range of milli-ampere meter.		
36	Type and specifications of the surge connecters.		
37	Surge counter min. current for recording a lightning stroke	200 Amp	
38	Surge counter max. disch. Current withstand	100KA peak for 4/10 wave shape.	
39	Range of continuous leakage current at rated voltage with variation due to change in temperature & frequency		
40	Size and length of flexible Cu cable for connection between LA & surge counter		
41	Voltage time curve for thermal stability of LA after a stroke	To be provided	
42	Paint shade of surge counter housing	Polyurethane, 692 of IS-5	

Annexure – D

Recommended spares (Data by supplier)

List of recommended spares shall be submitted as follows –

Sr. No.	Description of spare part	Unit	Quantity
1		Nos.	
2		Nos.	
3			
4			
5			
6			

BSES

Technical Specification

Of

High Mast

Specification no – BSES-TS-307-HIGHMT-R0

Rev:		0
Date:		10 Oct 2025
Prepared by	Alok Mandal	
Reviewed by	Uttam Shukla	
Approved by	Deepti Sharma	

1.0 Scope of supply

This specification covers the requirement of design, manufacture and testing of 16M high mast along with accessories and requisite hardware. The scope also includes erection, installation and associated civil work like foundation etc.

2.0 Codes & Standards

All standards, specifications, and codes of practice referred to herein shall be the latest edition including all applicable official amendments and revisions as applicable.

IS: 5	1994	Colour for ready mixed paints and enamels.
IS:694	1990	PVC insulated cables for working voltages upto and including 1100V.
IS:800	1984	Code of practice for general construction in steel.
IS:802	1978 Part-2	Code of practice for use of structural steel in Overhead transmission line towers. Part-2 Fabrication, galvanising, inspection and packing.
IS: 875	1987 Part-3	Code of practice for design loads(other than earthquake) for buildings and structures: Wind loads
IS:2062	1992	Steel for general structural purposes.
IS: 2551	1982	Danger notice plates.
IS:2629	1985	Recommended practice for hot dip galvanising on iron and steel.
IS :2633	1986	Methods for testing uniformity of coating of zinc coated articles.
IS :3961	1967 Part-2	Recommended current ratings for PVC insulated cables. Part-2: PVC insulated and PVC sheathed heavy duty cables.
IS :5133	1969 Part-1	Boxes for enclosure of electrical accessories- Part-1: steel and cast iron boxes.
IS: 5831	1984	PVC insulation and sheath of electric cables.
IS :8130	1984	Conductors for insulated electric cables and flexible cords.
IS :10810	1984	Method of tests for cables.
IS:13703	1993 Part-1	Low voltage fuses for voltages not exceeding 1000V AC or 1500V DC .Part-1:General requirements
IS:13703	1993 Part-2	Low voltage fuses for voltages not exceeding 1000V AC or 1500V DC .Part-2:Supplementary requirements for fuses for industrial applications
BS EN 10-027 (part-1)	1992	Designation systems for steel: steel names, principal symbols
BS EN 10-027 (part-2)	1992	Designation systems for steel: steel numbers
BS 5135		National Electrical Code.
BS-EN 10-027		Indian Electricity rules(relevant safety regulation of CEA) and acts

3.0 Service Conditions

Equipment to be supplied against this specification shall be suitable for satisfactory continuous operation under the following tropical conditions.

Maximum Ambient Temperature (Degree C)	50
Maximum temperature in shade (Degree C)	45
Min. Temperature of Air in Shade (Degree C)	-10
Relative Humidity (Percent)	10 To 100
Maximum annual rain fall (mm)	1450
Maximum Wind pressure (Kg/Sq. M.)	150
Maximum altitude above mean sea level (Meters)	3000
Isoceranic level (days per year)	50
Seismic level (Horizontal Acceleration) Moderately hot and humid tropical climate conducive to rust and fungus growth	0.3g

4.0 Technical Requirement

4.1. Structure

The High mast shall be of continuously tapered, galvanised polygonal cross section, at least 20 sided, presenting a good and pleasing appearance, based on proven In-Tension design, conforming to the standards referred to above, to give an assured performance, and reliable service. The structure shall be suitable for wind loading as per IS - 875 Part -III, 1987.

4.2. Construction

The mast shall be fabricated from special steel plates, conforming to BS-EN10-027, cut and folded to form a polygonal section and telescopically jointed and welded. The welding shall be in accordance with BS-5135. The sections are joined together by slip-stressed-fit method. No site welding shall be done. Only bolted joint shall be done on the mast at the site. The minimum over lap distance shall be 1.5 times the diameter at penetration. The dimensions of the mast shall be decided based on proper design and accordingly design calculations shall be submitted for review / approval.

The mast shall be provided with fully penetrated flange, free from any lamination or incursion. The welded connection of the base flange shall be fully developed to the strength of the entire section. The base flange shall be provided with supplementary gussets between the bolt holes to ensure elimination of helical stress concentration. The entire fabricated mast shall be hot dip galvanised both internally and externally.

4.3. Door Opening

An adequate door opening shall be provided at the base of the mast and the opening shall be such that it permits clear access to equipment like winches, cables, plug and socket, etc. and also facilitate easy removal of the winch. The door opening shall be complete with a close fitting, vandal resistant, weatherproof door, provided with a heavy-duty double internal lock with special paddle key.

4.4. Dynamic Loading for the Mast

The mast structure shall designed as per TR No-7 of Institutions of lightning engineers of UK and shall be suitable to sustain maximum reaction arising from a wind speed as per IS-875 (three second gust), and is measured at a height of 10 meters above ground level.

4.5. Lantern Carriage

A fabricated Lantern Carriage shall be provided for fixing and holding the flood light fittings and control gear boxes. The lantern Carriage shall be of special design and shall be of steel tube construction, the tubes acting as conduits for wires, with holes fully protected by

grommets. (The lantern carriage tube should not be used as conduit. Separate flexible conduits are used from CG Boxes to the Flood Light Fixtures) The Lantern Carriage shall be designed and fabricated to hold the required number of flood light fittings and the control gear boxes, and also have a perfect self balance.

The Lantern Carriage shall be fabricated in two halves and joined by bolted flanges with stainless steel bolts and plastic lock type stainless steel nuts to enable easy installation or removal from the erected mast. The inner lining of the carriage shall be provided with protective PVC arrangement, so that no damage is caused to the surface of the mast during the raising and lowering operation of the carriage. The entire Lantern Carriage is hot dip galvanised after fabrication.

4.6. Junction Box

The junction box shall be cast aluminium or SS, weather proof IP67 junction box. It shall be provided on the Carriage Assembly as required, from which the inter-connections to the designed number of the flood light luminaries and associated control gears fixed on the carriage, is made.

4.7. Raising and lowering mechanism

It will be necessary to lower and raise the Lantern Carriage Assembly to install and maintain the luminaries and lamps. To enable this, a suitable Winch Arrangement shall be provided, with the winch fixed at the base of the mast and the specially designed head frame assembly at the top.

4.8. Winch

The winch shall be of completely self-sustaining type, without the need for brake, shoe, springs or clutches. Each driving spindle of the winch is positively locked when not in use. Individual drum also should be operated for the fine adjustment of lantern carriage. The capacity, operating speed, safe working load, recommended lubrication and serial number of the winch shall be clearly marked on each winch.

The gear ratio of the winch shall be 53 : 1 or as recommended by manufacturer. However, the minimum working load shall not be less than 750 kg. The winch shall be self-lubricating type by means of an oil bath and the oil shall be readily available grades of reputed manufacturers and details of the oil shall be furnished.

The winch drums shall be grooved to ensure perfect seat for stable and tidy rope lay, with no chances of rope slippage. The rope termination in the winch shall be such that distortion or twisting is eliminated and at least 5 to 6 turns of rope remains on the drum even when the

lantern carriage is fully lowered and rested on the rest pads. It should be possible to operate the winch manually by a suitable handle and/or by an external power tool. It would be possible to remove the double drum after dismantling, through the door opening provided at the base of the mast. Also, a winch gearbox for simultaneous and reversible operation of the double drum winch shall be provided as part of the contract.

The winch shall be type tested in a reputed test lab/ Institution and the test certificates shall be furnished before supply of materials. Test certificate shall be furnished by the bidder from the original equipment manufacturer, for each winch in support of the maximum load operated by the winch.

4.9. Head Frame

The head frame, which is to be designed, as a capping unit of the mast, shall be of welded steel construction, galvanised both internally and externally after assembly. The top pulley shall be of appropriate diameter, large enough to accommodate the stainless steel wire ropes and the multi-core electric cable. The pulley block shall be made of corrosion resistant material, and is of the cast Aluminium Alloy (LM-6) or SS. Pulley made of synthetic materials such as Plastic or PVC is not acceptable. Self-lubricating bearings and stainless steel shaft shall be provided to facilitate smooth and maintenance free operation for a long period. The pulley assembly shall be fully protected by a canopy galvanised internally and externally.

Close fitting guides and sleeves shall be provided to ensure that the ropes and cables do not dislodge from their respective position in the grooves. The head frame shall be provided with guides and stops with PVC buffer for docking the lantern carriage.

4.10 Stainless Steel Wire Ropes

The suspension system shall essentially be without any intermediate joint and shall consist of only non-corrodable stainless steel of AISI - 316 or better grade.

The stainless steel wire ropes shall be of 7/19 construction, the central core being of the same material. The overall diameter of the rope shall be more than 6 mm keeping in mind contingency. The breaking load of each rope shall not be less than 2350 kg. The design shall have a factor of safety over 5 for the system at full load. The end constructions of ropes to the winch drum shall be fitted with talurit.

The thimbles are secured on ropes by compression splices. Two continuous lengths of stainless steel wire ropes are used in the system and no intermediate joints are acceptable in view of the required safety. No intermediate joints, either bolted or else, shall be provided on the wire ropes between winch and lantern carriage.

4.11 Electrical System, Cable and Cable Connections

A suitable terminal box shall be provided as part of the supply at the base compartment of the high mast for terminating the incoming cable. The electrical connections from the bottom to the top shall be made by special trailing cable. The cable is EPR insulated and PCP sheathed to get flexibility and endurance. Size of the cable is minimum 5 core 2.5 sq mm copper, in case of failure of any core 2 spare cores shall be available. The cable shall be of reputed make. At the top necessary weatherproof junction box to terminate the trailing cable shall be provided. Connections from the top junction box to the individual luminaries is made by using 3 core 1.5 sq mm flexible PVC cables of reputed make. The system shall have in built facilities for testing the luminaries while in lowered position.

Also, suitable provision shall be made at the base compartment of the mast to facilitate the operation of externally mounted, electrically operated power tool for raising and lowering of the lantern carriage assembly. The trailing cables of the lantern carriage rings shall be terminated by means of specially designed, metal clad, multi pin plug and socket provided in the base compartment to enable easy disconnection when required.

4.12 Power Tool for the Winch

A suitable, high-powered, electrically driven, externally mounted power tool, with manual over ride, together with an operating stand shall be supplied for the raising and lowering of the lantern carriage for maintenance purposes. The speed of the power tool may preferably of slow speed, of 1.5 to 1.8 m/minute, so that vibrations associated with high speed operation are avoided. The power tool shall be single speed, provided with a motor of the required rating, suitable for hand/stand operation. The power tool shall be supplied complete with push button type remote control switch, together with 6 (six) meters of power cable, so that the operations can be carried out from a safe distance of 5 (five) meters. The capacity and speed of the electric motor used in the power tool shall be suitable for the lifting of the design load installed on the lantern carriage.

The power tool stand shall be so designed that it will not only be self-supporting but also aligns the power tool perfectly with respect to the winch spindle during the operations. Also, a handle for the manual operation of the winches in case of problems with the electrically operated tool shall be provided and shall incorporate a torque-limiting device.

A separate torque-limiting device to protect the wire ropes from over stretching shall be provided. It shall be mechanical with suitable load adjusting device. The torque limiter is a requirement as per the relevant standards in view of the overall safety of the system.

4.13 Lightning Finial

One number heavy-duty hot dip galvanised lightning finial shall be provided for each mast. The lightning finial shall be minimum 1.2 m in length and shall be provided at the centre of the head frame. It shall be bolted solidly to the head frame to get a direct conducting path to the earth through the mast. The lightning finial shall not be provided on the lantern carriage under any circumstances in view of safety of the system.

4.14 Aviation Obstruction Lights:

Based on site and project specific requirements, 2 nos. Low Intensity Type-B (as per Table 6.3 of Volume-1, Annexure-14 of ICAO Guideline for Aerodrome Design & Operations) LED type aviation obstruction lights of reliable design and reputed manufacturer shall be provided on top of each mast.

4.15 Earthing Terminals:

Suitable earth terminal pad using twin 12 mm diameter stainless steel bolts shall be provided at a convenient location on the base of the Mast, for lighting and electrical earthing of the mast.

4.16 Luminaries:

The non-integral floodlight luminaries with LED Lamp shall be provided with each mast. Optical compartment of the luminary shall be IP 66 and control gear compartment shall be IP 54 or better. Bajaj, Crompton and Philips make luminaries are approved. Detailed technical brochure shall be provided along with the bid.

4.17 Feeder Pillar:

Feeder pillar required for feeding power to the Lighting mast shall also be supplied along with the mast and its accessories. The feeder pillar is fed from the main switchgear / main lighting distribution board. The outgoings of this feeder pillar are connected to the MCBs in the mast. The feeder pillar shall be FLP or WP IP 54 with rain protection canopy in galvanised CRCA sheet or cast Aluminium body (for FLP) and finished with two coats of epoxy primer and grey enamel paint of shade 631 of IS-5. The feeder Pillar shall comprise of incoming 32 Amp TPN switch, HRC fuses, outgoing 25 Amp SP MCB, Time switch and contactor for automatic on & off of circuit with manual override, TP MCB for power tool contactors for reversing the motor and overload Protection of motor. Feeder pillar shall be mounted on suitable foundation near to the mast.

5.0 Tests

All type test certificates for the tests listed in the relevant standards, conducted on identical masts shall be submitted to BSES for approval. Routine tests & acceptance tests as per relevant IS shall be conducted as per approved Quality Plan.

6.0 Marking / Name Plate

The high mast shall be provided with "BSES" insignia with anodized aluminium plate. Anodized plate showing 24X7 customer care number shall also be provided. Name plate shall include manufacturer name, date of manufacturing, warranty period and other details as per standards.

Annexure A: Guaranteed Technical Parameters

Sl. No.	Particulars	Data by purchaser			Data by seller
1	**Name and address of manufacturer**				
2	**Overall height of high mast**	12 mtrs	16 mtrs	20 mtrs	
2.1	Make				
2.2	Material of construction of shaft	Grade S355 J O as per BSEN 10025 or equivalent			
2.2	Cross section of mast	20 sided, regular continuously tapered polygonal			
2.3	Number of sections	One	Two	Two	
2.3	Minimum thickness of shaft (mm)	4 mm	Bottom section: 5 mm Top section: 4mm	Bottom section: 5 mm Top section: 4mm	
2.4	Length of individual section (mm)	12000 mm	10900mm / 5850mm	10375mm / 10375mm	
2.5	Minimum Base and top diameter	340mm (A/F) and 150 mm (A/F)	450mm (A/F) and 150 mm (A/F)	500mm (A/F) and 150 mm (A/F)	
2.6	Type of joints	No site joints, mast should be delivered in a single section	Telescopic slip joint, stress fitted	Telescopic slip joint, stress fitted	
2.7	Length of overlap	N/A	750mm	750mm	
2.8	Metal protection treatment of fabricated mast section	Hot dip galvanization through single dipping process			
2.9	Thickness of	Minimum 85 microns as per IS:2629			

Sl. No.	Particulars	Data by purchaser			Data by seller
	galvanizations				
2.10	Size of opening door at base	Approx. 250 X 1200 mm			
2.11	Type of locking arrangement and door construction	Anti vandal type			
2.12	Details of struck board inside	Insulated base board			
2.13	Size , material and thickness of cable termination box				
2.14	Minimum size of base plate diameter	540 mm (min.)	650 mm (min.)	680 mm (min.)	
2.15	Minimum size of base plate thickness	25 mm thick			
2.16	Minimum size of anchor plate thickness	8 mm			
2.17	Details of template	Same as anchor plate but 2 mm thick			
3	**Dynamic loading as prevailing at site**				
3.1	maximum wind pressure (basic wind speed)	47m/s as per IS:875, p-3			
3.2	Maximum gust speed time	3 seconds			
3.3	Height above ground level at which wind speed is consider	10 mtrs			
3.4	Factor of safety for wind load	1.25			
3.5	Factor of safety for other load	1.15			
3.6	Application standard for mast design	Technical report #7:2000 by ILE, UK			
4	**Foundation details**				
4.1	Type of foundation	Open raft shallow footing or pile as applicable			
4.2	Size of foundation	as per design conforming to IS:456			
4.3	Design safety factor	2			
4.4	Considered wind speed	180 m /s			
4.5	Depth of foundation	As per requirement of design			
4.6	Average soil bearing capacity	As per site condition			
4.7	Numbers of foundation bolts	6 nos	8 nos		
4.8	PCD of foundation bolts	440 mm (min.)	550 mm (min.)	600 mm (min.)	
4.9	Type of foundation bolt	Tor steel			
4.10	Bolt diameter / length	25mm dia / 750 mm	32mm dia / 1325 mm	40mm dia / 1375 mm	
5	**Lantern Carriage**				

Sl. No.	Particulars	Data by purchaser			Data by seller
5.1	Diameter of Carriage Ring	Suitable to carry up to 4 nos. floodlights	1200 mm	1200 mm	
5.2	Construction	MS Channels / Tube, Hot dip galvanized	Channels 75X40X4mm thick	Channels 75X40X4mm thick	
5.3	Number of joints	As per manufacturer's standard design (2 segments as per Cl no.4.5)	3 segments (2 segments as per Cl no.4.5)	3 segments (2 segments as per Cl no.4.5)	
5.4	Buffer arrangement between carriage and mast	Rubber padded guide ring provided			
5.5	Load carrying capacity	500 kg	750 kg	750 kg	
5.6	Total weight of assembly with fitting	as per design			
6	**Winch**				
6.1	Make of winch				
6.2	Number of drums/ winch	Double drum			
6.5	Gear Ratio				
6.3	Capacity	SWL 500 kg	SWL 750 kg		
6.4	Method of operation	Manual and Inbuilt power tool			
6.6	Operating speed				
6.7	Lubricant Arrangement	Permanent oil bath			
6.8	Type of lubricant				
6.9	Material of construction of gear	Phosphorus Bronze / EN 19			
6.10	Tested load per drum	500 kg	750 kg		
6.11	SWL of winch at 410 rpm	500 kg SWL	750 kg SWL		
7	**Wire rope**				
7.1	Make				
7.2	Grade	AISI 316			
7.3	Number of ropes	3 nos / 5mm (three wire rope)	3 nos / 6 mm (three wire rope)		
7.4	Construction	7./19			
7.5	Diameter of Wire rope	5mm	6mm		
7.6	Factor of safety	Not less than 5	Not less than 6		
7.7	Breaking capacity	Minimum 2350Kgs. X 2			
8	**Cable**				

Sl. No.	Particulars	Data by purchaser	Data by seller
8.1	Type	EPR coated PCP sheathed	
8.2	Material	Multicore copper conductor	
8.3	Make	Finolex, torrent, Polycab, KEI, Havells	
8.4	Current carrying capacity	As per IS 9968 (Part - 1), 1998	
8.5	conductor size	5CX2.5 sqmm.	
9	**Torque limiter**		
9.1	Lifting capacity	Upto 500 kg | Upto 750 kg	
9.2	Adjustable / non adjustable	Adjustable	
10	**Lantern and Fixture**		
10.1	Type Of Lamp	LED, Asymetrical IP65 fitting	
10.1.1	Wattage	400W	
10.1.2	Make		
10.1.3	Model Number		
10.2	Housing	Single piece gravity die-cast	
10.2.1	Material	Aluminium alloy: LM6	
10.2.2	Ingress protection		
10.2.3	For optical compartment	IP:65/IP:66	
10.2.4	For control gear compartment	IP:54 or better	
10.2.5	Dimensions of lantern	As per design standard	
10.2.6	Weight of lantern with control gear	As per design standard	
10.3	Lamp Cover	Perspex/Toughened glass	
10.3.1	Toughened glass		
10.3.2	Class of glass	AA/SSQ	
10.3.3	Nominal thickness	5mm	
10.3.4	Perspex thickness	2.5mm+/-0.4 mm	
10.4	Material of gasket	Slicon Rubber/ Neoprene	
10.5	Lamp holder	Screw type/three pin type	
10.5.1	Material	Porcelain	
10.6	Ballast	Conventional/Open type/ VI/VPI	
10.6.1	Ballast voltage	240V AC	
10.6.2	Minimum open circuit voltage	198V	
10.6.3	Frequency	50 Hz	
10.6.4	Current output(A), at rated voltage		
10.6.5	Voltage to current ratio ( ) +/-0.5%		
10.6.6	Watt loss (W)	To be specified	
10.7	Power factor of lantern	More than 0.95 lag	
10.7.1	Value of capacitor	To be specified	
10.8	Igniter	Three wire	
10.9	Reflector	Anodised/POT	

Sl. No.	Particulars	Data by purchaser			Data by seller
10.9.1	Angle of tilt of lamp	To be specified			
10.9.2	Downward light output ratio	More than 70%			
10.9.3	Angle of throw	As per clause 5.12.5			
10.9.4	Angle of spread	As per clause 5.12.6			
10.9.5	Luminous intensity in C = 0° plane at γ = 90°	Less than 10 Cd/klm			
10.9.6	Luminous intensity in C = 0° plane at γ = 80°	Less than 30 Cd/klm			
10.10	Make of fixture	Bajaj, GE, Philips and CGL			
10.10.1	Nos of fixture provided with high mast	4	5	6	
10.10.2	Type of fixture	Weather proof			
11	**Others**				
11.1	Make of 24 hour Differential Timer Switch	Legrand/ GE/ Schnider/ L&T			
11.2	Make of 32A TPN MCB	GE/ Hager/ Legrand/ Schnider			
11.3	Make of 32A Contactor	L&T/ Schnider/ GE			
11.4	Earth pit	Two numbers of treated earth pit with each mast			
12	GTP and Drawing Submitted	Yes/No			
13	Type Tests Submitted	Yes/ No			
14	Technical Brochure of luminaries submitted	YES / NO			
15	Operation and maintenance manual submitted	YES / NO			

BSES

Technical Specification

Of

Outdoor Switchyard Materials

Specification no – BSES-TS-316-SYDMT-R0

Rev:		1
Date:		19 Nov 2025
Prepared by	Alok Mandal	
Reviewed by	Uttam Shukla	
Approved by	Deepti Sharma	

Technical Specification Outdoor Switchyard Material

1.0 INTENT OF SPECIFICATION

1.1 This specification is intended to cover the design, manufacture, assembly, testing at manufacturer's works, supply & delivery, properly packed for transport F.O.R site of 66KV Outdoor Switchyard Material and Hardware complete with all accessories for efficient and trouble free operation.

1.2 In the event of any discrepancy between listed documents, the stipulation of this specification shall govern.

1.3 The specification shall be read and constructed in conjunction with other sections of bidding document.

2.0 SCOPE OF WORK

2.1 **Scope of Supply**

Type, rating, connections etc. of the materials shall be as detailed in the drawings and annexure. The materials shall be furnished in strict compliance with the same.

2.2 Following materials and hardware's are to be furnished:

a) ACSR ZEBRA Conductor
b) Disc Insulator & Post Insulators
c) Conductor Spacers, Clamps, Connectors.

Any material or accessory, which may not have been specifically mentioned but which is usual and / or necessary shall be supplied free of cost to the Owner.

PG Clamps for ACSR Conductors shall not be acceptable. However, C-Wedge Connector can be offered in place of PG Clamp.

3.0 GENERAL REQUIREMENTS

3.1 **Codes and Standards**

i) All equipment and materials shall be designed, manufactured and tested in accordance with the latest applicable Indian Standards (IS) & IEC Standard except where modified and / or supplemented by this specification.

ii) Equipment and material conforming to any other standard, which ensures equal or better quality, may be accepted. In such cases, copies of the English version of the standard adopted shall be submitted along with the bid.

iii) The electrical installation shall meet the requirements of Indian Electricity Rules as amended upto date and relevant IS Codes of Practice. In addition other rules or regulations applicable to the work followed. In case of any discrepancy, the more restrictive rule shall be binding.

4.0 DESIGN CRITERIA

4.1 All the ACSR conductors, disc and string insulators, clamps & connectors, hardware's etc. will be used in extra high voltage system having characteristics as listed in the annexure.

4.2 All equipments, conductors, hardware's, insulators & clamps etc. will be installed outdoor in a hot, humid & tropical atmosphere.

4.3 The maximum temperature in any part of the clamps, connectors, conductors etc at specified rating shall not exceed the permissible limit as stipulated in the relevant standards.

4.4 All equipments, conductors, clamps, connectors, insulators etc shall be capable of withstanding the dynamic & thermal stresses of maximum short circuit current without any damages or deterioration.

4.5 In order to avoid concentration of stresses, all sharp edges of clamps, connectors etc. shall be rounded off.

4.6 Bi-metallic connectors shall be used for any connection between dissimilar materials.

5.0 SPECIFIC REQUIREMENT

5.1 **Equipment & Materials**

i) Equipment & material shall comply with description, rating etc. as detailed in this specification and annexure.

ii) All accessories, fittings, supports, bolts etc. which form part of the equipment or which are necessary for safe and satisfactory installation and operation of the equipment shall be furnished.

iii) All parts shall be made accurately to standard gauges so as to facilitate replacement and repair. All corresponding parts of similar equipment shall be interchangeable.

iv) After the treatment of steel surfaces damaged during transit sufficient quantity of anti-corrosive paint shall be applied and subsequently finished with two coats of final paint of approved shade.

5.2 **ACSR Conductor**

i) The Aluminum Standard conductor and steel reinforced shall have the technical parameters matching with the requirements given in Annexure. ACSR conductors shall conform to the latest revision of IS-398.

ii) The material for ACSR conductor shall conform to the following:

Aluminum

The Aluminum strands shall be hard drawn from electrolytic Aluminium rods having purity not less than 99.5% and a copper content not exceeding 0.04%.

Steel

The steel wire strands shall be drawn from high carbon steel wire rods and shall conform to the following chemical composition:

Element -% Composition

Carbon - 0.50 to 0.85 Manganese - 0.50 to 1.10 Phosphorous -not more than 0.035 Sulphur -not more than 0.045 Silicon - 0.10 to 0.35

Zinc

The zinc used for galvanizing shall be electrolytic High Grade Zinc of 99.95% purity. It shall conform to and satisfy all the requirements of IS: 209-1979.

5.3 Clamps and connectors

i) All clamps, connectors and hardware's shall be designed manufactured and tested as per relevant standards.

ii) All clamps & connectors for connection with ACSR conductors shall have high tensile Aluminum alloy grade A6 body. U- Bolt and nut for the clamp shall be made of non-magnetic material e.g. chromium steel.

iii) Bolt, nut, washer, shackle etc. required for other purpose shall be of forged steel with adequate strength and the surface shall be so protected as to offer maximum resistance to corrosion. Malleable iron wherever used for any part shall be of best quality and shall correspond to latest amendments of relevant IS.

iv) Various fittings & accessories of the clamps & connectors shall be so designed as to eliminate sharp edges & maintain bright smooth surface. All bolts, nuts, rivets etc. shall have round profiles.

5.4 **Disc Insulator**

i) All disc insulators shall be dimensioned appropriately so as to have the required Electro- Mechanical strength for EHV outdoor duties.

ii) Suspension and tension insulators shall be wet process porcelain with ball and socket connection. Glazing of the porcelain shall be uniform brown colour, free from blisters, burrs and other similar defects. Insulators shall be interchangeable and shall be suitable for forming either suspension or strain strings. Each insulator shall have rated strength markings on porcelain printed and applied before firing.

iii) When operating at normal rated voltage there shall be no electric discharge between conductor and insulator which would cause corrosion or injury to conductors or insulators by the formation of substances due to chemical action. No radio interference shall be caused when operating at normal rated voltage.

iv) Insulating shall be co-ordinated with basis impulse level of the system. The creepage distance shall correspond to very heavily polluted atmosphere (31mm/KV)

v) Porcelain used in insulator manufacture shall be homogeneous, free from lamination, cavities and other flaws or imperfection that might affect the mechanical or dielectric quality and shall be thoroughly vitrified, tough and impervious to moisture.

vi) The design of the insulator shall be such that stresses due to expansion and contraction in any part of the insulator shall not lead to deterioration. All ferrous parts shall be hot dip galvanized in accordance with the latest edition of IS: 209. The zinc coating shall be uniform, adherent, smooth, reasonably bright, continuous and free from imperfection such as flux, ash, rust stains bulky white deposits and blisters.

vii) Bidder shall make available data on the essential features of design including the method of assembly of discs and metal parts, number of discs per insulators, the manner in which mechanical stresses are transmitted through discs to adjacent parts, provision for meeting expansion stresses, results of corona and thermal shock tests, recommended working strength and any special design or arrangement employed to increase life under service conditions.

viii) Insulator hardware shall be of forged steel. Malleable cast iron shall not be accepted except for insulator disc cap. The surface of hardware must be clean, smooth, without cuts, abrasion or projections. No part shall be subjected to excessive localized pressure. The metal parts shall not produce any noise generating corona under operating conditions.

ix) The insulator hardware assembly and clamps shall be designed for 120KN Tensile load. The clamps shall be designed for 700 Kg tensile load. Earth wire tension clamp shall be designed for 1000 Kg tensile load with a factor of safety of two (2).

x) The tension string assemblies shall be supplied along with suitable turn buckle.

6.0 TESTS

6.1 Routine Tests

i) During manufacture and on completion of all equipment, conductors, insulators, clamps, connectors and accessories shall be routine tested as per applicable standards at manufacture's works.

ii) The suspension and tension strings, insulator discs and hardware shall be subjected to the following, acceptance tests and routine tests:

a) Visual examination
b) Verification of Dimensions as per Cl no. 10.5 of IS: 731
c) Temperature cycle test as per Cl no. 10.6 of IS: 731
d) Puncture test as per Cl no. 10.10 of IS: 731
e) Galvanizing test as per Cl no. 10.12 of IS: 731
f) Mechanical performance test as per IEC-575 Cl. 4
g) Test on locking device for ball & socket coupling as per IEC-372 (2)
h) Porosity test as per Cl no. 10.11 of IS: 731

Acceptance Tests

a) Visual examination as per Cl. 5.10 Of IS: 2468 (Part-1)
b) Verification of Dimensions as per Cl. 5.8 Of IS: 2468 (Part-1)
c) Galvanizing / Electroplating test as per Cl. 5.9 Of IS: 2468 (Part-1)
d) Slip strength test as per Cl. 5.4 Of IS: 2468 (Part-1)
e) Shore hardness test for the Elastomer (if applicable as per the value guaranteed by the Bidder)
f) Mechanical strength test for each component (including grading rings and arcing horns).
g) Test on locking devices for ball and socket coupling as per IEC: 372 (2)

Routine Tests on Disc Insulator / Long rod Insulator

a) Visual Inspection as per Cl No. 10.13 of IS: 731
b) Mechanical Routine Test as per Cl No. 10.14 of IS: 731
c) Electrical Routine Test as per Cl No. 10.15 of IS: 731

Routine Tests on Hardware Fittings

a) Visual examination as per Cl. 5.10 Of IS: 2468 (Part-1)
b) Mechanical strength Test as per Cl. 5.11 Of IS: 2468 (Part-1)

Test during manufacture on all components as applicable on Disc Insulator

a) Chemical analysis of zinc used for galvanizing:

Samples taken from the zinc ingot shall be chemically analyzed as per IS: 209. The purity of zinc shall not be less than 99.95%.

b) Chemical analysis, mechanical hardness tests and magnetic particle inspection for malleable casting:

The chemical analysis, hardness tests and magnetic particle inspection for malleable casting will be as per the internationally recognized procedure for these tests. The sampling will be based on heat number and heat treatment batch

Test during manufacture on all components as applicable on hardware fittings

a) Chemical analysis of zinc used for galvanizing

Samples taken from the zinc ingot shall be chemically analyzed as per IS: 209. The purity of zinc shall not be less than 99.95%.

b) Chemical analysis, mechanical hardness tests and magnetic particle inspection for malleable casting:

The chemical analysis, hardness tests and magnetic particle inspection for malleable casting will be as per the internationally recognized procedure for these tests. The sampling will be based on heat number and heat treatment batch

c) Chemical analysis, mechanical hardness tests and magnetic particle inspection for fabricated hardware.

The chemical analysis, hardness tests and magnetic particle inspection for fabricated hardware will be as per the internationally recognized procedure for these tests. The sampling will be based on heat number and heat treatment batch.

iii) The following, acceptance & routine tests and tests during manufacturing shall be carried out on the conductor.

Acceptance Tests

a)	Visual check for joints, scratches etc. and length of conductor	
b)	Dimensional check on steel and Aluminum strands	
c)	Check for lay ratio of various layers	
d)	Galvanizing test on steel strands	

e)	Torsion and Elongation test on steel strands	
f)	Breaking load test on steel and Aluminum strands	
g)	Wrap test on steel and Aluminum strands	IS: 398(Part-V) 1982 Clauses 12.5.2, 12.7 & 12.8
h)	DC resistance test on Aluminum strands	
i)	UTS test on welded joint of Aluminum strands	

NOTE: All the above tests except test mentioned at (i) shall be carried out on Aluminum and steel strands after stranding only

Routine Tests

a) Check to ensure that the joints are as per specification
b) Check that there are no cuts, fins etc. on the strands

iv) The following type, routine & acceptance tests and tests during manufacturing shall be carried out on the earth wire.

Acceptance Tests

a) Visual check for joints, scratches etc. and length of Earth wire
b) Dimensional check
c) Galvanizing test
d) Lay length check
e) Torsion test
f) Elongation test
g) Wrap test
h) DC resistance test : IS: 398 (Part lll) 1976
i) Breaking load test
j) Chemical Analysis of steel

Routine Tests

a) Check that there are no cuts, fins etc. on the strands.
b) Check for correctness of stranding

6.2 **Type Test**

Test certificates for type tests shall be from CPRI/ERDA/NABL approved lab, as stipulated in Indian Standards carried out on similar equipment shall be furnished. If test certificate for any of the type test is not available, the same shall be carried out free of cost from CPRI/ERDA/NABL.

6.3 **Test Witness**

Tests shall be performed in presence of Owner's representative if so desired by the Owner. The contractor shall give at least fifteen (15) days advance notice of the date when the tests are to be carried out.

6.4 **Test Certificates**

i) Certified copies of all tests carried out at works shall be furnished in requisite no. of copies as stated in the condition of contract for approval of the Owner. The certificates shall furnish complete identification, date including serial number of each material and accessory.

ii) Equipment shall be dispatched from works only after receipt of Owner's written approval of shop test reports.

iii) Type test certificate on any equipment, if so desired by the Owner, shall be furnished. Otherwise, the equipment shall have to be type tested, free of charge, to prove the design.

7.0 SPARES

The Bidder shall submit a list of recommended spare parts for three (3) years of satisfactory and trouble free operation, indicating itemized price of each item of the spares.

8.0 DRAWING & DOCUMENTS TO BE FURNISHED

8.1 **To be submitted with each copy of the Bid**

i) Typical general arrangement drawing of the equipment / items.
ii) Technical leaflets on equipment / items expending constructional features.
iii) Type test certificates on similar equipment / items.

8.2 **To be submitted for Approval and Distribution**

i) Dimensional general arrangement drawing showing disposition of various fittings for equipment, accessories, components etc.
ii) Assembly drawing for erection at site with part numbers and schedule of materials.
iii) Type & Routine test certificates
iv) Technical leaflets on equipment / items
v) Back-up calculation for:

a) Selection of equipment / material ratings.
b) Sag-Tension of ACSR.
c) Lighting protection system
d) Selection of rigid bus support spacing.

vi) Any other relevant drawing, documents, calculations and data necessary for satisfactory installation, operation and maintenance.

9.0 DEVIATIONS

Deviation from this specification, if any, shall be clearly brought out in the offer. Unless owner explicitly accepts such deviations, it shall be considered that the offer fully complies with the specification.

Technical Specification Outdoor Switchyard Material

RATINGS & REQUIREMENTS

1.0	**CONDUCTORS**	
1.1	**ACSR Conductor**	
1.1.1	Reference standard :	IS 398
1.1.2	Code Name :	ZEBRA
1.1.3	Type :	ACSR
1.1.4	Overall diameter	28.62mm
1.1.5	Stranding no. of wire and diameter :	54/3.18 (Al) 7/3.18 (St)
	Number of strands Core	1
	1st Layer	6
	2nd Layer	12
	3rd Layer	18
	4th Layer	24
1.1.6	Sectional area of Aluminum :	428.9 sq.mm
1.1.7	Total Sectional area :	484.5 sq.mm
1.1.9	Ultimate Strength (min) :	130.32 KN
1.1.10	Calculated DC resistance at 20 Deg C :	0.06868 ohm/Km

NOTE – The 66KV Main Bus Shall be with TWIN ZEBRA. The equipment bay shall be Single Zebra.

2.0	**GALVANISED STEEL SHIELD WIRE**	
2.1	Reference standard :	IS 398
2.2.	Number of strands	Steel core-1, outer Steel layer-6
2.3	Total sectional area	54.55 sq.mm
2.4	Overall diameter	9.45 mm
2.5	Approximate weight	428 kg/km
2.6	Calculated DC. resistance at 200C	3.37 ohms/km
2.7	Minimum ultimate tensile strength	56 KN
2.8	Direction of lay of outer layer	Right hand
2.9	Minimum tensile strength	110 Kgf/mm2
3.0	**CONNECTORS / CLAMP ASSEMBLY / SPACER**	
3.1	Reference standard :	
3.1.1	Clamp / Connector	IS 5561
3.1.2	Spacer	IS 10162
3.2	Material	Aluminum Alloy A6
3.3	Continuous current carrying capacity (r.m.s) at 50deg C ambient temp.	2000A (min)
3.4	Short time current carrying capacity	31.5KA for 3 sec
3.5	Maximum temperature rise over Ambient of 50	35 deg C

	deg C	
4.0	**INSULATORS**	
4.1	Reference standard	
4.1.1	String Insulators/Insulator fittings	IS 731/ IS 2486
4.1.2	Post Insulators	IS 2544
4.2	Type	Post Insulator-
	Cylindrical solid	
	Core type,	
	Suspension &	
	Tension Insulator	
4.3	Service	Outdoor
4.4	System details	
4.4.1	Voltage	66/72.5KV (Nom/Max)
4.4.2	Nos. of phases	3
4.4.3	Frequency	50Hz
4.4.4	System neutral earthing	Effectively earthed
4.5	Insulation Level	
4.5.1	Dry power frequency withstand	140KV r.m.s
4.5.2	Wet power frequency withstands	140KV r.m.s
4.6	Impulse withstand	325KV
4.7	Creepage	31mm/KV

Bus Post Insulators shall have minimum cantilever strength of 800Kg and minimum torsion moment of 500 Kg.

FITTINGS AND ACCESSORIES OF INSULATORS

Each insulator shall be furnished complete with the fittings and accessories as listed below according to requirement

1. Suspension top fitting
2. Suspension clamp fitting
3. Conductor suspension clamp
4. Tension end fitting
5. Tension (anchor) clamp adopter
6. Conductor tension (anchor) clamp
7. Top metal fitting
8. Bottom metal fitting
9. Nuts, Cotter pin, security clips etc.
10. Forged pin, studs etc.

Other standard accessories which are not specifically mentioned but usually provided with insulator of such type and rating for efficient and trouble free operation.

BSES Rajdhani Power Limited
BSES Bhawan, Nehru Place, New Delhi- 19

TECHNICAL SPECIFICATION

FOR

IT DEVICES FOR GRID COMMUNICATION

DOCUMENT NO.: BRPL-IT-SCADA-0001

Rev.: 02

Prepared by	**Sonia Mittal**	Mittal	**Rev: 1**
Reviewed by	**Uttam Shukla**	Shukla	**Date: 19th Nov., 2025**
Approved by	**Deepti Sharma**	Deepti	

DOCUMENT CONTROL SHEET

DOCUMENT : TECHNICAL SPECIFICATION OF IT DEVICES FOR GRID COMMUNICATION

DOCUMENT NO. : BRPL-IT-SCADA-001

REV. NO. : 02

ENDORSEMENT

Rev No.	Date	Description	GM - IT	HOD - IT
			Prepared by	Approved By
			BSES Rajdhani Power Limited	
02	19.07.2024	3rd	Sonia Mittal (Manager-CES EHV	Abhinav Srivastava HOD – CES EHV
01	02.01.2023	Second issue	Suman Kumar (Asst. V.P.)	Bhuwanesh Dwivedi HOD – SCADA
00	05.02.2019	First issue	Suman Kumar	Mrityunjay Kumar

(This document is a property of BSES Rajdhani Power Limited. This is not transferable and shall not be used for any purpose other than for which it is issued)

Contents

Sr. No.	Clause No.	Description	Page no.
1.	1.0	INTENT OF SPECIFICATION	4
2.	2.0	SCOPE OF SUPPLY AND SERVICES	5
3.	2.1	IT RACK ROOM REQUIREMENT	5
4.	2.2	POWER SUPPLY REQUIREMENTS	5
5.	2.3	EARTHING REQUIREMENTS	5
6.	2.4	IT RACK SPECIFICATION	6
7.	2.5	IT DEVICES	7
8.	3.0	TERMINAL POINTS	7
9.	4.0	EXCLUSIONS	7
10.	5.0	BILL OF QUANTITY AND VENDOR LIST OF EACH ITEM PER RACK FOR EACH GRID	8

POINTS TO BE CONSIDERED DURING DESIGNING OF NEW GRID

1.0 INTENT OF SPECIFICATION

1.1 Tender Specification is intended to cover design, engineering, manufacture, assembly, inspection, shop testing, supply, packing, forwarding to site, unloading, storage and preservation, handling at site, insurance, erection & supervision of erection, pre–commissioning, testing & commissioning, completion of facilities, conducting reliability run tests and performance guarantee tests and handing over the complete IT system to IT department of BSES Rajdhani power limited.

The scope shall also cover the following activities and services in respect of all the equipment and works specified in various sections of this specification.

a) Basic engineering of all equipment and equipment systems.

b) Detailed design of all the equipment and equipment system(s).

c) Providing engineering drawings, data, instruction manuals, as built drawings and other information for owner's review, approval and records.

d) Compliance with statutory requirements and obtaining clearances from statutory authorities, wherever required.

e) Complete manufacturing including shop testing.

f) Packing and transportation from the manufacturer's works to the site including customs clearance, port charges, if any.

g) Receipt, movement to proper storage, storage, preservation and conservation of equipment at the site, movement from storage area to interim/ final foundation location.

h) Supply of spares as per specified list.

i) All items and equipment though not specifically mentioned in the specification, but needed to complete the system to meet the intent of the specification shall be deemed to be included in the scope of the bidder.

It is not the intent to completely specify all details of design and construction, but only to lay down broad sizing and quality criteria for the major equipment and systems and it is expected that the equipments shall conform in all respects to high standards of engineering, design and workmanship and shall be capable of performing in continuous commercial operation up to the contractor's guarantee in a specified manner acceptable to the owner.

2.0 SCOPE OF SUPPLY AND SERVICES

The scope of supply and services shall be complete but not limited to the following:

2.1 IT RACK ROOM REQUIREMENT

2.1.1 Air conditioned room shall be provided for proper functioning of all IT devices. The temperature shall be maintained to 22^0 to 24^0 C

2.1.2 Room size shall be minimum as –

a) Length – 3.5 mtrs
b) Width – 2.5 mtrs.
c) Height – 3 mtrs.

2.1.3 Cable trench/ duct – 200mm wide cable trench/ duct shall be provided below the finished floor for proper routing of cables up to IT rack. 100mm size conduit shall be provided for cable entry from outside of the building to inside cable trench/ duct. The cable trench / duct shall be connected to nearest DCDB for proper power cable routing up to IT rack.

2.1.4 Room door width shall be minimum 4 ft. wide for ease of rack entry and height shall be as per standard norms. Door shall have locking arrangement.

2.1.5 Room's front side shall be provided with glass partition to have the clear view of IT rack from outside the room.

2.1.6 Towers (2nos.) for communication link shall be installed at the roof of the building. The area required for base of the tower shall be 5 ft X 5 ft and the tower load shall be maximum 250 kg. Link shall be delivered by Airtel/ Jio /Sify ISPs.

- ISP based MPLS - 2 Mbps each from Two Vendor for SCADA
- ISP based MPLS 4 Mbps for CCTV survilance

These links delivery shall be directly taken care by owner. Bidder to provide the suitable platform as motioned in the clause for tower erection.

2.2 POWER SUPPLY REQUIREMENTS

2.2.1 Required power supply for communication devices inside the IT rack shall be provided. Two numbers 48V DC power through suitable MCB shall be provided for owner's use in the IT rack this power supply shall be used for communication link's POE devices.

2.2.2 All internal wiring of rack for various ratings of power supply required by other devices i.e switch, routers, cooling fan, light etc shall be provided.

2.2.2 All communication equipments/ devices inside the IT rack shall be on DC power supply.

2.3 EARTHING REQUIREMENTS

2.3.1 Dedicated electronic earthing shall be provided for IT rack and their devices. The earth pit resistance should be between 0.6 ohm to 1 ohm.

2.3.2 Electronic Earthing cable from earth pit to IT rack shall be of minimum 16 sq.mm multi stranded copper cable PVC insulated and internal devices shall be done with minimum of 06 sq.mm multi stranded copper cable PVC insulated.

2.4 IT RACK SPECIFICATION

2.4.1 The design of IT rack and layout of all equipment, terminal blocks etc. shall be based on human engineering considerations, fully keeping in view the convenience of operation and maintenance personnel and shall be subject to Owner's approval during detailed engineering.

2.4.2 Rack shall be free standing/ wall mounting type and have bottom entry for cables to be decided application wise during detailed engineering. The bottom of rack shall be sealed with bottom plate, double compression cable glands and fire proof sealing material to prevent ingress of dust and propagation of fire.

2.4.3 Rack size shall be 12U/15U and made of CRCA sheet with 1.6 mm thickness. The rack shall be of front and back opening with 2 mm thick door frame. Front and back door shall have full length of 3 mm thick glass panel for clear view of inside equipments. Cable gland plate shall be detachable type and of 2mm thickness. Door hinges and locks shall be as per manufacturer standards. Special key type locks are not acceptable. Rack colour shade shall be powder coated RAL 7035.

2.4.4 Two nos. adjustable height tray shall be provided in the rack for routers and ISP devices.

2.4.5 Following are the minimum equipment/ accessories shall be provided in the rack however same shall be decided during detail engineering –

1. DC Power supply converter -

   i) Input source – 48V DC / 220V DC – 1 no. (input supply depends on grid voltage range)

   ii) Output – 12V DC - 2 nos., 48VDC – 2 nos.(for owners use-ISPs), 48V DC/ required supply for router – 1 no. and spare – 1 no.

   iii) Input and output connection shall be of terminal type.

   iv) Input terminals - suitable for 2.5 sq.mm cable

   v) Output terminals - suitable for 1.5 sq.mm cable

2. AC power supply extension board -

   i) Input source – 230V AC – 1 no.

   ii) Output sockets with switch – 230V AC – 5 nos.

3. Rack Fan and filter – size 6"

4. MCB and Terminal blocks – MCB DP type and terminals shall be mounted on DIN rail. Minimum four nos. MCB shall be provided in the rack. One no. for 48 V DC (10A), one no. for 230V AC (10A) and one no. of each rating shall be kept as spare. Terminal blocks shall be fused type and suitable to respective voltage rating and intended cable size mentioned elsewhere in the specification.

2.4.6 All inter panel wiring shall be with FRLS type wires with proper routing inside the cable alley. Cross ferruling shall be provided for easy identification of wires. Cable shall have proper cable tagging.

2.4.7 Panel name plate shall be provided at top portion of front and back doors. It shall be engraved type and made of acrylic plate.

2.5 IT devices

2.5.1 Router – It shall be of industrial grade type. It shall be with 5 years comprehensive warrantee. Brief technical specification is as follows –

a) Make – CISCO / RAD / Fortinet.
b) 2 FO Ports for ISP with Ethernet RJ-45 Convertor
c) 4/6 LAN Ports 100/1000 Mbps
d) Dual Power Supply (DC-DC/ DC-AC) with auto switching
e) 4g/5G SIM based with antenna
f) Built in GPS
g) IP20/40 compliance
h) Industrial Grade - No Fan ,Temperature range upto 70 degree celcius
i) RS-232serial , USB port /ports
j) Supports BGP,OSPF,RIP for MPLS and SDH
k) NMS Monitoring enabled SNMP,Netflow
l) IEC-104 protocol enabled and OT protocol Support
m) 5 Year Onsite warranty with Patch Management and replacement

2.5.2 Switch – Industrial Grade, No Fan, Temp should support upto 70 degree celcius

a) Make – Cisco/Procomm/Siemens
b) 8/16/24 ports, L2 managable
b) Managable and Routed protocol support
c) SNMPV3 support with IP based monitoring. Switch shall be provided with all mounting accessories.

2.5.3 Fiber Device and Cable- LIU 48 Ports *2 , Optical Single mode media convertor *4(DC) , Opical Fiber cable and cable accessories as per requirement Make – D-link .Comspec

The detailed technical specification shall be finalized during detail engineering.

3.0 Terminal Points

3.1 Power supply – From PDB/ DCDB to IT rack including cable supply, erection and termination at both end (PDB/ DCDB and IT rack). PDB/ DCDB details shall be part of Electrical section of technical specification

3.2 LAN cabling – From RTU to IT rack router including CAT 6 cable (armour type) supply, erection and termination at both end (RTU and IT rack). This communication cable shall be of redundant cables.

3.3 SCADA Communication link – Shall be provided by respective ISP upto router WAN ports.

4.0 Exclusions –

4.1 Communication tower/ pole and link.

5.0 Bill of Quantity and vendor list of each item per rack for each grid –

Sr. No.	Item Description	Make / Model No.	Quantity (in nos.)
1	Rack – 12U	Rittal /Pyrotech/Netrack/APC	01
2	Router – Industrial grade	CISCO/ RAD/ Fortinet	01
3	Switch	Cisco/Procomm/Siemens	01
4	Power Supply converter	Meanwell/ Phoenix	01
5	MCB	Havells / Legrand	04
6	Terminal blocks – fused type	Wago/ phoenix	1 lot
7	AC extension board	Havells / Anchor	1
8	Wires for Internal wiring	RR cable, Finolex, Havells	1 lot
9	Spare Terminal blocks with fuses (mounted in the rack)	Wago/ phoenix	20%
10	Terminal fuses of each rating (loose supply)		20%

Technical Specification for

Grid Meters

Specification no – BSES-TS-142-GEM-R0

Rev		**0**
Date		**April 13, 2023**
Prepared BY	Ashish Joshi	
Reviewed BY	Puneet Duggal	
	Vikas Srivastava	
	Lalit Mukhriya	
Approved BY	Gaurav Sharma	
	Manish Jain	

CONTENTS

1. SCOPE....3
2. STANDARDS APPLICABLE....3
3. TECHNICAL REQUIREMENTS AND SPECIFICATION....3
4. CONSTRUCTION OF THE METER....10
5. INFLUENECE QUANTITIES....11
6. COMPONENET SPECIFICATIONS....12
7. SEALING OF THE METER....13
8. CONNECTION DIAGRAM AND TERMINAL MARKING....13
9. GUARANTEE....13
10. TESTS....14
11. MANUFACTURING ACTIVITIVES....14
12. PACKING....15
13. DRAWING & TECHNICAL LEAFLETS....15
14. GENERAL REQUIREMENT FOR MDAS/HES....15
15. AFTER SALES SERVICE....16

1. SCOPE

IEC compliant, Class- 0.2S, Three phase Four wire, 63.5 volts (Phase to Neutral), -/1 Amp and -/5 Amp Static (Electronic), 4 Quadrant Tri-vector Energy Meter and Software for meter reading and analysis.

This specification covers design, manufacturing, testing and supply of high precision 3 phase 4 wire static tri-vector energy meter of accuracy class 0.2s capable of performing functions of energy audit in EHV /sub transmission system and software for meter reading and analysis.

2. STANDARDS APPLICABLE

The meters shall be of class 0.2s class accuracy and shall meet all the requirements specified in standard IEC specifications.

Standard	Details
IS 14697: 1999	Specification for A.C Static Transformer operated Watt Hour & VAR – Hour meters, class 0.2s
CBIP Technical Report No. 325	Specification for A.C. Static Electrical Energy Meters.
IS 15959 (Companion specification)	DLMS Indian Companion Standard – Category 'B' for Ring fencing/Boundary/ABT Metering

3. TECHNICAL REQUIREMENTS AND SPECIFICATION

Meters are required for installation substations, the basic system parameters wherein these meters will be installed shall be as under: -

3.1 Secondary voltage: 63.5 V (P-N) for 3 phase 4 wire Secondary current: -/1 A or -/5 A (as per tender requirement)

3.2 The meter shall be designed for -/1 A or -/5 A (as per tender requirement) CT secondary and 200% overloading.

3.3 The meters shall make use of non volatile memory for storage of all data including billing and tamper data and data shall be retained even if any component fails.

3.4 The meter should not be dependent on the PT supply and should have the provision of auxiliary power supply. 48V to 110V DC/ 230VAC and shall continue to communicate other remaining parameters on auxiliary power supply.

3.5 Computation of demand shall be on the basis of Real Time Clock of the meter.

3.6 Meters covered under this specification shall be fully static type with non volatile memory to register various billing parameters and complete with other features as detailed out in this specifications. Any other design meeting technical specification requirements or features / accuracy etc. better than this specification requirement manufactured as per relevant IEC /Technical Specification shall also be acceptable.

3.7 Meters shall be suitable for accurate measurement and display of energy and other billing parameters within the specified limits of errors under balanced and unbalanced loads conditions in a poly phase network.

3.8 Power factor Range: Meters shall be suitable for measurement of billing parameters with specified accuracy for full power factor range i.e. zero lag unity zero lead.

3.9 KVAh computation shall be on the basis of power factor lag + lead principle.

3.10 Multiplying factor for the CTs & PTs ratios shall be external.

3.11 The display of energy & also demand shall have minimum seven digits with fixed decimal. The energy and demand shall be displayed in kWh, kVAh, kVARh& kW, kVA, kVARh respectively.

3.14 Provision shall be made to read various billing parameters and also load survey data through a meter reading instrument. This arrangement can be through an optical coupler or any other suitable device galvanically isolated from meter circuit. Provision shall be made to seal the optical coupler to ensure proper security.

3.15 Meter shall indicate the connection status on the display for proactive maintenance.

3.15 Meters shall be designed for satisfactory operation with the following supply voltage / frequency 50 Hz).

Voltage – V. ref +20% to -30 %

Frequency – 47.5 Hz to 52.5 Hz (ref. frequency 50 Hz)

(For above voltage and frequency range the meters shall measure, register and display various parameters accurately).

3.16 **Display Parameters**

The data shall be displayed on LCD display which shall be clearly visible from distance in 7 segments 7 digit.

The display parameters on Auto Scroll as well as Push Button shall be as follows:

SN	Parameter
1.	LCD Segment Check
2.	Meter Serial Number
3.	Real Date And Time
4.	Incoming Active Energy (Total)
5.	Outgoing Active Energy (Total)
6.	Incoming Reactive Energy (Total)
7.	Outgoing Reactive Energy (Total)
8.	Incoming Apparent Energy (Total)
9.	Outgoing Apparent Energy (Total)
10.	Three Phase Power Factor (Instantaneous) With Sign
11.	Line Current L1 (Instantaneous)

12.	Line Current L2 (Instantaneous)
13.	Line Current L3 (Instantaneous)
14.	Phase to Neutral Voltages L1 (Instantaneous)
15.	Phase to Neutral Voltages L2 (Instantaneous)
16.	Phase to Neutral Voltages L3 (Instantaneous)
17.	Phase wise Power Factor
18.	Connection status Flag
19.	Frequency
20.	Incoming Active Demand (Instantaneous)
21.	Outgoing Active Demand (Instantaneous)
22.	Incoming Apparent Demand (Instantaneous)
23.	Outgoing Apparent Demand (Instantaneous)
24.	Incoming Reactive Demand (Instantaneous)
25.	Outgoing Reactive Demand (Instantaneous)
26.	Present PT status
27.	Present CT status
28.	Last occurred and restored tamper with date and time
29.	High resolution active import energy
30.	High resolution active export energy
31.	High resolution reactive import energy
32.	High resolution reactive export energy
33.	High resolution apparent import energy
34.	High resolution apparent export energy

3.17 Meter Reading during Power Outage
It shall be possible to read the meter if there is No Power to the meter.

3.18. Maximum Demand Registration
Maximum demand computation shall be based on block interval concept with integration period of 15 minutes.

3.19 The MD integration cycle shall be on the basis of real time.

3.20. **Tamper Features**

Missing Potential – To indicate loss of potential in any or two phases of potential supply. The identification of phase date and time of first occurrence, date and time of last tamper restore and cumulative number of tampering shall be indicated.

Current Unbalance – To indicate there has been unbalance of current beyond the prescribed limits. (As approved by BSES)

Voltage Unbalance – To indicate there has been unbalance of Voltage beyond the prescribed limits. (As approved by BSES)

CT Short/ Open – The meter shall be capable of detecting and recording occurrences and restoration of shorting (bypassing) / opening of any one or two phases of CT.

Current Reversal – The meter shall be capable of detecting and recording occurrence and restoration with date and time if the current is flowing in reverse direction in one or more phases.

Power On/Off – The meter shall be capable to record power on /off events in the meter memory. All potential failure should record as power off event.

Over Current –When load condition at any phase i.e. Line current at any phase goes more than defined limit (as approved by BSES), this will be detected as Over current condition.

High and Low Voltage –The meter should detect under and over voltage events respectively if voltage falls / rise from defined limits. (As approved by BSES)

Snapshots (numerical values) should have Phase wise value of given parameters as voltage, current (Line, Active, Reactive), power factor and active, reactive & apparent energy readings with direction tag as well as the date and time of logging of the occurrence and restoration of all tamper events, subject to meter-memory space as described herein under, should be logged in the meter-memory and available for retrieving through local communication using CMRI or remote communication using the MDAS/HES.

Minimum 200 events (occurrence and restoration where occurrence and restoration shall be counted as separate events) of all tampers with date and time shall be available in the meter memory on first-in, first-out basis.

The values for voltage, current and P.F. etc. for the purpose of logging occurrence and restoration of various types of tamper shall be mentioned.

3.21 Provision should be made for automatic reset of max demand at the end of pre-defined period (eg. Beginning of month, every16th of month etc). Default resetting date is 00:00 hrs, 1st of every month. Billing parameters should be available for last 12 months.

3.22 **Load Survey Capability**

It should be possible to store previous data of 40 days for interval of 15 minutes for parametersand snapshots of energies at 24:00hours as mentioned below:

Load Survey Parameters (15 minute integration for last 40 days)	
S.N0	**Description**
1	Average Active Demand (Outgoing)
2	Average Active Demand (Incoming)
3	Reactive Demand lag While Active Import
4	Reactive Demand lead While Active Import
5	Reactive Demand lag While Active Export
6	Reactive Demand lead While Active Export
7	Average Apparent Demand (Outgoing)
8	Average Apparent Demand (Incoming)
9	Average Active Energy (Outgoing)
10	Average Active Energy (Incoming)
11	Reactive Energy lag While Active Import
12	Reactive Energy lead While Active Import
13	Reactive Energy lag While Active Export
14	Reactive Energy lead While Active Export
15	Average Apparent Energy (Outgoing)
16	Average Apparent Energy (Incoming)
17	Phase Voltage (Instantaneous & Average) L1
18	Phase Voltage (Instantaneous & Average) L2
19	Phase Voltage (Instantaneous & Average) L3
20	Phase Current (Instantaneous & Average) L1
21	Phase Current (Instantaneous & Average) L2
22	Phase Current (Instantaneous & Average) L3
23	Phase wise Power factor
24	Frequency
25	Phase wise Average Active Demand (Outgoing)
26	Phase wise Average Active Demand (Incoming)
27	Power off minutes in integration period

Mid Night Parameters (Snapshot at 24:00 hours for last 40 days)	
1	Active Energy (Import)
2	Active Energy (Export)
3	Reactive Energy (Import)
4	Reactive Energy (Export)
5	Apparent Energy (Import)
6	Apparent Energy (Export)
7	Reactive lag While Active Import
8	Reactive lead While Active Import
9	Reactive lag While Active Export
10	Reactive lead While Active Export

3.23 It should be possible to down load parameters, daily midnight readings and load survey data using BCS and obtain full details of demand and consumption

3.24 Meters shall be four quadrant meters capable of recording active reactive and apparent energy and also demand in all the four quadrants.

3.25 **Communication**

For the output ports available in the meter, standard communication interface shall only be adopted. The Meters shall be Modbus compliant. **However it is preferable if meter have both Modbus and DLMS (IS 15959) protocols selectable at site.** The energy meter shall have a hardwired RS 485 port for serial data communication and galvanically isolated optical communication port, so that it can be easily connected to hand held common meter reading instrument for data transfer with proper security and without error. The energy meter shall have an optional RS 232 port so that there is a provision to subsequently hook the meter directly to a remote metering device such as GPRS/3G/4G Modem etc. The optical port shall be located in front of the meter and shall have adequate sealing arrangement to seal it.Meters covered under this specification will be employed for metering at sub stations. In this case the instantaneous parameters load survey data and tamper information etc will be monitored remotely at central station.

In case any proprietary protocol is used in the meter, It will be obligatory on the part of the bidders to furnish complete details of proprietary protocol to the purchaser so that there may not be any difficulty in extraction of data from the meter through the available ports when connected to the communication bus (prepared for some other data communication purpose). Details of protocol used are necessarily required to be intimated / furnished by the suppliers to purchaser.

The meter supplier shall integrate the meters with existing / planned remote communication system or device, including devices (from any vendor) and set-up used in BSES. The supplier is required to provide an undertaking in this regard.

It shall be possible to download the following parameters from Remote location at a frequency of every 15 minutes -

SN	Description
1.	LCD Segment Check
2.	Meter Serial Number
3.	Real Date And Time
4.	Incoming Average Demand (Active Power) in Last Integration Period
5.	Outgoing Average Demand (Active Power) in Last Integration Period
6.	Incoming Average Demand (Reactive Power) in Last Integration Period
7.	Outgoing Average Demand (Reactive Power) in Last Integration Period
8.	Incoming Average Demand (Apparent Power) in Last Integration Period
9.	Incoming Average Demand (Apparent Power) in Last Integration Period

10.	Incoming Active Energy (Total)
11.	Outgoing Active Energy (Total)
12.	Incoming Reactive Energy (Total)
13.	Outgoing Reactive Energy (Total)
14.	Incoming Apparent Energy (Total)
15.	Outgoing Apparent Energy (Total)
16.	Three Phase Power Factor (Instantaneous) With Sign
17.	Connection status Flag
18.	Line Current L1 (Instantaneous)
19.	Line Current L2 (Instantaneous)
20.	Line Current L3 (Instantaneous)
21.	Phase to Neutral Voltages L1 (Instantaneous)
22.	Phase to Neutral Voltages L2 (Instantaneous)
23.	Phase to Neutral Voltages L3 (Instantaneous)
24.	Phase wise Power Factor
25.	Frequency
26.	Incoming Active Demand (Instantaneous)
27.	Outgoing Active Demand (Instantaneous)
28.	Incoming Apparent Demand (Instantaneous)
29.	Outgoing Apparent Demand (Instantaneous)
30.	Incoming Reactive Demand (Instantaneous) with Sign(“+” for Lag”-“ for Lead)
31.	Outgoing Reactive Demand (Instantaneous) with Sign(“+” for Lag”-“ for Lead)
32.	Cumulative tamper count
33.	Cumulative MD reset Count
34.	Cumulative reactive (Demand & Energy) lag While active import
35.	Cumulative reactive (Demand & Energy) lead While active import
36.	Cumulative reactive (Demand & Energy) lag While active Export
37.	Cumulative reactive (Demand & Energy) lead While active Export
38.	Number of power failures
39.	Cumulative power failure duration.
40.	Present PT status
41.	Present CT status
42.	Last occurred and restored tamper with date and time
43.	Incoming maximum Active demand (Previous Month)
44.	Outgoing maximum Active demand (Previous Month)

45.	Incoming maximum Reactive demand (Previous Month)
46.	Outgoing maximum Reactive demand (Previous Month)
47.	Incoming maximum Apparent demand (Previous Month)
48.	Outgoing maximum Apparent demand (Previous Month)
49.	Incoming Active Energy (Previous Month)
50.	Outgoing Active Energy (Previous Month)
51.	Incoming Reactive Energy (Previous Month)
52.	Outgoing Reactive Energy (Previous Month)
53.	Incoming Apparent Energy (Previous Month)
54.	Outgoing Apparent Energy (Previous Month)
55.	Incoming Active Energy (Previous Month Consumption)
56.	Outgoing Active Energy (Previous Month Consumption)
57.	Incoming Reactive Energy (Previous Month Consumption)
58.	Outgoing Reactive Energy (Previous Month Consumption)
59.	Incoming Apparent Energy (Previous Month Consumption)
60.	Outgoing Apparent Energy (Previous Month Consumption)

3.26 Output device: The meters shall have a test output in the form of a blinking of LED for testing of the meters accuracy. Testing shall also be possible through optical port accessible from the front and can be monitored with meter reading instrument having high resolution display. The meters shall give high resolution energy values directly to meter reading instruments. The resolution will be sufficient to enable conduction of the starting current and accuracy test in less time.

3.27 Meter shall operate and record satisfactorily independent of phase sequence of input supply so long as phase association between voltage and current circuit is in order.

3.28 The performance of meter should not be affected by the external electromagnetic interference such as Electricals discharge of cable and capacitor, harmonics, electrostatic discharges, external magnetic field and injection of DC current in AC circuits etc.

3.29 The basic meter shall be designed for overloading up to 200%.

3.30 No setting point/ setting register etc, shall be provided for adjustment of measurement errors.

4. CONSTRUCTION OF THE METER

Body of the meter shall be designed suitable for projection mounting. The meter should be made of high

quality raw material to ensure higher reliability and longer life. The meter should be compact and reliable in design e.g. to transport and immune to vibration and shocks involved in transportation / handling. The construction of the meter shall be suitable for this purpose in all respects and shall give assurance of stable and consistent performance under all conditions especially during dust storm / heavy rains / very hot days. All insulating material used in the construction of the meter shall be non hygroscopic non ageing and of tested quality. All parts that are likely to develop corrosion shall be effectively protected against corrosion.

SN	Parameters	Technical Requirements
1.	Meter Body	Normally top transparent and base opaque material polycarbonate of LEXAN 143A/943AA or equivalent grade. Should be ultrasonically welded.
2.	Terminal Block	Made of polycarbonate of grade 500R or equivalent grade, Integral part of the meter base, brass or copper current terminals with flat end screw.
3.	Terminal Cover	Transparent terminal cover with provision of sealing through sealing screw.
4.	Resistance of heat and fire	The terminal block and meter case shall have reasonable safety against the spread of fire. They shall not be ignited by thermal overload of live parts in contact with them.
5.	Marking on name plates	"GRID Meter" shall be boldly marked on name plate. Design of Name plate will be approved by BSES before supply of meters.
6.	Meter Sealing	Supplier shall affix minimum one OWN hologram seal on side of meter body. Additionally another seal will be fixed as provided by BSES.
7.	Guarantee	5 years from date of installation or 5.5 years from date of dispatch.
8.	Insulation	A meter shall withstand an insulation test of 8kV.

5. INFLUENECE QUANTITIES

The meter shall work satisfactorily with guaranteed accuracy limit under the presence of the following influence quantities:

a. External Magnetic Field
b. Electromagnetic Field Induction
c. Radio Frequency Interference
d. Unbalanced Load
e. Vibration
f. Waveform 10% of 3rd Harmonics
g. Phase Sequence
h. Voltage Unbalance
i. Electromagnetic H.F Field
j. Temperature & Humidity

6. COMPONENET SPECIFICATIONS

SN	Component Function	Requirement
6.1	Current Transformers	The Meters should be with the current transformers as measuring elements.
6.2	Measurement or computing chips	The Measurement or computing chips used in the Meter should be with the Surface mount type along with the ASICs.
6.3	Memory chips	The memory chips should not be affected by the external parameters like sparking, high voltage spikes or electrostatic discharges.
6.4	Display modules	a) The display modules should be well protected from the external UV radiations. b) The display visibility should be sufficient to read the Meter mounted at height of 0.5 meter as well as at the height of 2 meters c) The construction of the modules should be such that the displayed quantity should not disturbed with the life of display (PIN Type). d) It should be trans-reflective HTN or STN type industrial grade with extended temperature range.
6.5	Communication modules	Communication modules should be compatible for the two RS 232 ports (one for optical port for communication with Meter reading instruments & the other - for the hardwired RS 232 port to communicate with various modems for AMR)
6.6	Optical port	Optical port should be used to transfer the meter data to meter reading instrument. The mechanical construction of the port should be such to facilitate the data transfer easily.
6.7	Power Supply	The power supply should be with the capabilities as per the relevant standards. The power supply unit of the meter should not be affected in case the maximum voltage of the system appears to the terminals due to faults or due to wrong connections.
6.8	Electronic components	The active & passive components should be of the surface mount type & are to be handled & soldered by the state of art assembly processes.
6.9	Mechanical parts	a) The internal electrical components should be of electrolytic copper & should be protected from corrosion, rust etc. b) The other mechanical components should be protected from rust, corrosion etc. by suitable plating/painting methods.
6.10	Battery	Lithium with guaranteed life of 15 years
6.11	RTC & Micro controller	The accuracy of RTC shall be as per relevant standards

SN	Component Function	Requirement
6.12	P.C.B.	Glass Epoxy, fire resistance grade FR4, with minimum thickness 1.6 mm

Note: The components used by manufacturer shall be of reputed make and shall have "Minimum Life"more than the 10 years. The vendor has to certify the same.

7. SEALING OF THE METER

Proper sealing arrangements shall be provided on the meter to make it tamper proof and avoid mishandling by unauthorized person. At least two (2) seals on the body, two (2) seal on the terminals blocks and one seal each on communication ports could be provided. All the seals shall be provided on the front side only.

The meter body cover should be ultrasonically welded with the base such that it would not be opened without breaking / damaging the meter body.

8. CONNECTION DIAGRAM AND TERMINAL MARKING

The connection diagram of the meter shall be clearly shown on inside portion of terminal cover and shall be of permanent nature, Meter terminals shall also be marked and this marking should appear in the above diagram.

8.1 Meter shall have a name plate clearly visible effectively secured against removal and indelibly and distinctly marked with all the essential particulars as per relevant standards i.e.

a. Manufacturer's name and trademark
b. Meter serial number*
c. Type and description
d. Rated current voltage and frequency
e. Relevant IS/ IEC No should be printed along with ISI certification mark.
f. Manufacturer's meter constant shall invariably be indicated duly printed.
g. Name of the utility – "Property of BSES"
h. Purchase order no.
i. Month and year of manufacturing
j. Guarantee Period

Meter serial nos shall be shared by BSES

9. GUARANTEE

The meter shall be guaranteed for the period of five years from the date of commissioning or five and half year from the date of dispatch, whichever is earlier. The meters and also software / MRIs found defective within the above guarantee period shall be replaced / repaired by the supplier free of cost within one month of receipt of intimation.

10. TESTS

10.1 Type Testing of Meters: The offered meter should be strictly in conformance to the tender specification. The offered meters should be fully type tested at NABL accredited Laboratory as per relevant standards.

10.2 Acceptance Test: All acceptance test as per relevant standard shall be carried out in the meter

10.3 Routine Test: All routine testsas per relevant standard shall be carried out in the meter

10.4 Pre Dispatch Inspection: All acceptance tests and inspection of meter / software shall be carried out at the place of manufacture unless otherwise specially agreed upon by the manufacturer and purchaser at the time of purchases. The manufacturer shall offer to the inspector representing the purchaser all the reasonable facilities, free of charge for inspection and testing to satisfy him that the materials is being supplied in accordance with this specifications. The Company's representative / Engineer attending the above testing will carry out testing as relevant Standard and this specification and issue test certificate approval to the manufacturer and given clearance for despatch.

Minimum Testing Facility: Manufacturer should posses fully computerized meter test bench system for carrying out routine and acceptance tests as per relevant standard. In addition this facility should produce test reports for each and every meter.

11. MANUFACTURING ACTIVITIVES

Meter should be manufactured using SMT (surface mount technology) component and by deploying automatic SMT price and place machine and reflow solder process. Further the bidder should own or have assured access (though hire, lease or subcontract) of above facility. Quality should be ensued at the following stages.
(a) At PCB manufacturing stage, each Company shall be subjected to computerized bare Company testing.
(b) At insertion stage all components should under go computerized testing for confirming to design parameters and orientation.
(c) Complete assembled and soldered PVC should under go functional testing using automatic test equipments (ATEs).
(d) Prior to final testing and Calibration all meters shall be subjected to aging test (i.e. metes will be kept in ovens for 72 hours at 55 deg. cent temperature and atmospheric humidity under real life condition at its full load current. After 72 hours meters should works satisfactorily) to eliminate infant mortality. The calibration of meters shall be done in house.The bidders should submit the list of all components used in meter along with the offer.
The suppliershall give 15 days advanced intimation to enable BSES to depute representative for lot inspection and complete all integration activities required by BSES before shipment of material.

12. PACKING

Each meter may be suitably packed in the first instant to prevent ingress of moisture and dust and then placed in cushioned carton of a suitable material to prevent damage due to shocks during transit. The lid of the carton may be suitably sealed. Each meter should be packed in separate cushioned carton. A suitable number of selected cartons may be packed in a case of adequate strength with extra cushioning if considered necessary. The cases may be properly sealed against accidental opening in transit. The packing cases should be marked to indicate the fragile nature of the contents.

13. DRAWING & TECHNICAL LEAFLETS

Following drawings & Documents shall be submitted with the offer:

a. Detailed dimensional drawing of the meter
b. Rating plate
c. Terminal Block dimensional drawing ‘
d. Mounting arrangement drawings, connection diagram
e. Meter box drawing and dimensions
f. Component list
g. Display parameter
h. Type Test Certificates from NABL approved laboratories.
i. Tamper details
j. PIN configuration of Optical to RJ11 connector
k. Manual and SOP/DWI for operation
l. 01 no Meter sample

14. General Requirement for MDAS/HES

MDAS / HES shall have following minimum features -

1. MDAS / HES shall be scalable to meet BSES requirement
2. MDAS / HES shall be hosted / deployed at BSES data center only
3. MDAS / HES shall have User Access Rights Management System so that as per capability and requirement of user, rights could be provided and security keeps maintained.
4. MDAS / HES shall have option to export CDF as per MIOS standard as well as user defined report generation in format of Excel, PDF, XML and CSV for further integration with system
5. MDAS / HES shall maintain the audit trail of all transaction/changes with date and time.
6. Facility for On Demand acquisition of meter data and at user selectable periodicity
7. MDAS / HES application should have cyber security features as per standards
8. Support secure communication at all interface points

9. Store raw meter data for defined duration
10. Maintain time sync with meter and provision to correct RTC as per defined roles
11. Handling of Control signals / event messages on priority
12. Setting of meter configurable parameters
13. Remote configuration of meter parameters as per defined user roles, firmware upgrades remotely, MIS reports and exceptions reports.
14. Selective meters data can be scheduled to pull from MDAS / HES as desired.
15. Ensure data availability of 99.5% at MDAS / HES
16. Ability to attempt meter reading to recover missed reads and intermittent meter reads
17. Ability to receive and store outage and restoration event data from smart meters and outage systems and to log all such events for analysis
18. The MDAS / HES shall enable BSES to deliver reports in standard digital format such as PDF, Excel, etc.
19. MDAS / HES shall have User dashboard for alarms, events, communication status and provision to send email, SMS etc.
20. Display via a GUI the energy usage profile for a single meter or group of meters. The load profile shall illustrate energy consumption and peak demand in user defined intervals for a user-specified time period.

15. AFTER SALES SERVICE

In order to provided prompt and smooth after sales support /service etc. It shall be preferred to post / engage an engineer/ technician in Delhi by the manufacturer, to attend any minor defects immediately and to educate the user about proper installation of meter and programming of MRI base computer taking reading billing data load survey tamper information etc. through MRI and down load to PCs.
Manufacturer shall undertake to replace meter in case of failure within the guarantee period. The meters which are found defective/inoperative within the guarantee period, shall be replaced within six weeks of receipt of report for such defective/inoperative meters. If the defective meters are not replaced within the specified period then the same shall be treated as breach of performance and shall be liable for penalty. Delivery of software for HHU/CMRI before meter delivery is required. Vendor shall also ensure to deliver solution to meet DERC mandate within mutually agreed timeline at both MDAS/HES and CMRI. For any false events recorded in meter, vendor shall depute their representative for field visit within one week and provide the root cause analysis in 2 weeks time.

--End of Doc--

BSES

Technical Specification

For Heat Shrinkable &

GIS Cable Termination Kit

(11 kV, 33 kV, 66 kV XLPE Insulated Cables)

Specification no – BSES-TS-45-TERM-R0

Rev:		0
Pages		22
Date:		19 Apr 2022
Prepared by	Abhishek Vashistha	
	Gautam Deka/Pronab Bairagi	19/4/22
Reviewed by	Puneet Duggal	
	Amit Tomar	
Approved by	Gaurav Sharma	
	Gopal Nariya	

Index

Record of Revision 3
1.0.0 Scope of work 4
2.0.0 Codes & standards 4
3.0.0 Cable Construction 5
4.0.0 Cable Termination Kits 7
5.0.0 Quality Assurance (QA) 12
6.0.0 Deviations 13
7.0.0 Delivery 13
8.0.0 Inspection Expenses 13
9.0.0 Penalty 13
Annexure – A: Guaranteed Technical Particulars (GTP) 14
Annexure – B: Kit Content Table (KCT) 16
Annexure – C: Routine and Acceptance Test 17
Annexure – D: Technical Deviation Sheet 17
Annexure – E: Service Conditions 18
Annexure – F: Bimetallic Aluminium / Copper Lug 19
Annexure – G: Aluminum/Copper Lug For XLPE Cable 20
Annexure – H: SOP 21

Record of Revision

Item/Clause No.	Change in Specification	Approved By	Rev

1.0.0 Scope of work

Heat Shrinkable & GIS Termination Kits, suitable for 11 kV & 33 kV, 66 kV XLPE / PILC cables, shall be designed, manufactured, tested, packed and delivered by the Vendor, as per Purchaser's requirements.

2.0.0 Codes & standards

2.1.0 National Standards:

SL	Standard Number	Title
2.1.1	IS – 13573: 2011	Joints & Terminations of Polymeric Cables for working voltages from 6.6 kV up to and including 33 kV Performance Requirements and Type Tests
2.1.2	IS – 7098 Part 2 : 2011	Cross-linked Polyethylene (XLPE) Insulated PVC sheathed cables : Part 2 : For working voltages from 3.3 kV up to and including 33 kV
2.1.3	IS – 692: 1994	Paper insulated lead-sheathed cables (PILC) for rated voltages up to and including 33 kV specification
2.1.3	IS – 10810: 1984	Methods of test for cables
2.1.4	IS – 7098 Part 3 : 2019	Cross-linked polyethylene insulated thermoplastic sheathed Cables specification: Part 3 - For working voltages from 66 kV up to and including 220 KV

2.1.1 International Standards:

S No.	Standard Number	Title
2.2.1	EA TS – 09 – 13	Electricity Association – Technical Specification -09-13 Material component for use in Electric Power Cable Termination & Joints for System voltage above 1000 V up to 36 kV
2.2.2	IEEE – 48	Standards Test Procedures and requirements for high voltage alternating current cable termination
2.2.3	IEC – 60183	Guide to the selection of high voltage cables
2.2.4	IEC – 885 Part 1-3	Electric test methods for electric cables
2.2.5	IEC – 60840	Power cable with extruded insulation and their accessories for rated voltage above 30 Kv (Um=36 kV) up to 150 KV (Um=170 kV) – test methods and requirements.

3.0.0 Cable Construction

Normal sizes of XLPE cables used in BSES system and the construction features of these cables are indicated below:

a. 11 kV, 3-core x 150 sq mm AL
b. 11 kV, 3-core x 300 sq mm AL
c. 11 kV, 3-core x 400 sq mm AL
d. 11 kV, 3-core x 400 sq mm AL(OFC Embedded)
e. 11 kV, 1-core x 1000 sq mm AL
f. 11 kV, 1-core x 150 sq mm AL HTAB with copper metallic screen
g. 11 kV, 1-core x 150 sq mm AL HTAB with Aluminium wire metallic screen
h. 11 kV, 1-core x 95 sq mm AL HTAB with copper metallic screen
i. 11 kV, 1-core x 95 sq mm AL HTAB with Aluminium wire metallic screen
j. 33 kV, 3-core x 400 sq mm AL
k. 33 kV, 3-core x 400 sq mm AL (OFC Embedded)
l. 33 kV, 1-core x 1000 sq mm AL
m. 66 kV, 1-core x 630 sq mm AL
n. 66 kV, 1 core x 1000 sq mm AL
o. 66 kV, 3-core x 300 sq mm AL
p. 66 kV, 3-core x 300 sq mm AL(OFC Embedded)

PILC type Cables:

3-core 240 or 300 sq. Mm. Al

3.1.0	Conductor	For XLPE : a) Electrolytic Grade stranded Aluminium Conductor / Annealed Copper Conductor b) Grade: H2/ H4 as per IS: 8130/84 (For Al) c) Shape: Compacted Circular d) Class 2 For PILC : a) 11 kV : sector-shaped b) 33Kv: oval-shaped
3.2.0	Conductor Screen	For XLPE : Extruded Semi Conducting material For PILC : 11 kV : no conductor screen 33 kV : carbon paper
3.3.0	Insulation	For XLPE: Extruded TR XLPE For PILC: Layers of impregnated papers

3.4.0	Insulation Screen	**Non Metallic Screen:** For XLPE Insulated cable: a) For 11, 33 U/G cable and HTAB cable - Freely strippable Semi Conducting (without application of heat) b) For 66kV cable - Firmly bonded semi conducting **Metallic Screen:** a) For For 11, 33 & 66 Kv U/G cable – Copper Tape b) For HTAB – option 1 – Copper Tape (old installations) and option 2 – Aluminium wire (new installations) For PILC : a) 11 kV : absent (Belted) b) 33kV: metallised paper tape
3.5.0	Water Swellable Tape	For XLPE: Semi-conducting Water Swellable Tape shall be provided under the copper tape on each core. For PILC : not applicable
3.6.0	Filler	For XLPE: All interstices, including centre interstices filled by PP filler. Note- In special cases, for 66kV 3CX300 sqmm, 33kV, 3CX400 and 11kV 3CX400 cable are with-36 nos. Single mode and 12 nos. Multi modes OFC are also inbuilt as filler.Requirement of cable joint kit with OFC shall be fulfilled as per tender requirement For PILC : a) 11 kV : Crushed paper filler b) 33kV: Jute twine
3.7.0	Over all three cores	XLPE : Binder tape PILCA : 11 kV : belt paper 33kV: Copper Woven Fabric tape
3.8.0	Inner Sheath	For XLPE: Extruded Inner Sheath of Black PVC type ST-2. For PILC : Lead alloy sheath
3.9.0	Bedding Tape	For XLPE: not applicable For PILC: two layers of paper, followed by compounded (bituminized) cotton tape.
3.10.0	Copper Woven Fabric Tape (CWF tape)	For XLPE : not applicable For PILC : a) 11 kV : absent (Belted cable) b) 33 kV : applicable for screened cable
3.11.0	Armour	For XLPE : a) Galvanised Steel round Wires/ Galvanised steel flat strip armour (For 3 core cables) b) Hard drawn Aluminium Wire (For 1 core cables) c) Aluminium or lead sheathed for 1Core 66kV cables For PILC : a) 11 kV double steel tape armour
3.12.0	Binder Tape	For XLPE: Rubberised cotton tape

3.13.0	Outer Sheath	For XLPE: Extruded outer sheath of PVC (ST-2) for 11 kV/ 33 KV and HDPE for 66kV Cable with termite- repellent. For 66kV Cable- HDPE extruded semicon layer or HDPE with graphite layer. For PILC : compounded (bituminised) Jute/PVC
3.14.0	HTAB Cable (1CX150 and 1CX95) core construction	Aluminium conductor-conductor semicon screen- TR XPLE insulation-insulation semicon screen–Water Swell-able tape –Round wire armou installation) / Copper Tape (old installation)) Water Swell-able tape-outer sheath

4.0.0 Cable Termination Kits

General Technical Requirements for Cable Termination Kits are as follows:

4.1.0	Scope	Design, manufacture, testing and supply of Cable Termination Kits for H. T. Power Cables.
4.2.0	Functional Requirements	
4.2.1	Conductor Connection	

Voltage Grade	Cable Size	Application	Material of Lug	Connection Method
11 kV	3Cx150, 3Cx300 and 3Cx400 sq mm	Indoor	Bi-Metal	Crimping
		Outdoor	Bi-Metal/ Aluminium as per tender requirement	Crimping
	1Cx1000 sq mm	Indoor	Aluminium	Crimping
		Outdoor	Aluminium	Crimping
HTAB (indoor not required)	1Cx95	Outdoor	Aluminium	Crimping
	1Cx150	Outdoor	Aluminium	Crimping
33 kV	3Cx400 sq mm	Indoor	Aluminium	Crimping
		Outdoor	Aluminium	Crimping
	1Cx1000 sq mm	Indoor	Aluminium	Crimping
		Outdoor	Aluminium	Crimping
66 kV	3Cx300	Indoor	Aluminium	Crimping
		Outdoor	Aluminium	Crimping
	1Cx630, 1Cx1000 sq mm	Indoor	Aluminium	Crimping
		Outdoor	Aluminium	Crimping

* For Bimetallic Lug Copper portion shall be tinned

		a) For GIS cable termination kits: Plug in type, Conductor connection assembly shall be by standard method of split, silver-plated copper cone and pressure-fit contact assembly or as per manufacturer's standard. b) Top corners of all lugs shall be circular shape not rectangular. Refer Annexure F for details.(Except GIS kit)
4.2.2	Stress Control System	a) The earthed insulation screen of an XLPE cable is terminated at a suitable distance from the conductor. b) The tube is in electrical contact with insulation screen. c) Impedance of the tube shall be constant up to an operating temperature and shall be within the range $1x10^{08}$ ohm-cm to $8x10^{08}$ ohm-cm. d) Length of stress control tube for 11 kV and 33 kV shall be 130 mm and 260 mm respectively or according to insulation tube length. For 66kV termination kits, stress control tube shall be as per type tested design. e) The physical and electrical properties shall conform to ESI 09: 13. f) For GIS cable termination kits Stress control shall be by means of a polymeric stress cone. External profile of the cone shall match inner profile of GIS epoxy bushing. Vendor shall specify the material (EPDM / Silicone) of the cone.
4.2.3	Insulation Protection	a) XLPE insulation shall be protected by means of an outer tube, resistant to tracking and weathering. b) One end of the tube shall be coated internally with red sealant mastic for a length of 50 mm. c) Physical and Electrical properties shall conform to ESI 09: 13. d) Insulation Tube length for termination- shall be 650 mm for both Indoor and Outdoor Termination kits of 11kV, 3CX150, 3CX300 and 3CX400 sqmm cable. All other accessories related to termination shall be according to 650mm insulation tube length.
4.2.3.1	Outer Anti-tracking Tube	Outer length of the tube shall be controlled by providing creepage Extension Shed having the same material composition as the tube. These lengths are given in the table below: Creepage distance shall be 31mm/kV minimum.
4.2.3.2	OFC (66kV, 3CX300 sqmm , 33kV, 3Cx400 sqmm and 11kV, 3Cx400 sqmm cable)	Termination kit for OFC (36 single mode and 12 nos. Multi mode) shall be supplied along with termination kit.

Cable System		Length of tube (mm)		Creepage Extension Shed (No.)	
Voltage	Cores	Indoor	Outdoor	Indoor	Outdoor
11 kV	3 – core	650	650	Nil	2

	1 – core	340	340	NIL	2
33 kV	3 – core	800	1200	2	5
	1 – core	600	600	2	5

4.2.3.3	Oil Barrier Tube (applicable for PILC cable termination)	a) Transparent tube is used for restoring the insulation provided by belt paper, which is terminated at the crotch. b) 33 kV PILC Termination: The oil barrier tube provides an oil-resistant layer to contain impregnating compound within, thus preventing anti-tracking tube coming in contact with the impregnating compound.
4.2.4	Environmental Sealing System	a) Red Sealant Mastic Tape: This tape, used for sealing at ends, shall be synthetic rubber-based and resistant to tracking and weathering. Sufficient quantity of this tape shall be provided. b) Lug-sealing Sleeve: It shall have the same material composition as outer anti-tracking tube. The sleeve shall be fully coated internally with red sealant mastic tape. Length of the sleeve shall be so as to cover half length of the lug barrel and an equal length of track-resistant tube. c) Conductive Break-out: It shall be provided over the crotch for 3-core cables. The break-out base shall overlap PVC outer sheath by a 50 mm. Minimum. d) For GIS termination kits : Environmental sealing of cores below the switchgear shall be by means of a trifurcation kit, consisting of heat shrinkable conductive break-out and heat-shrinkable conductive tube of total length of 6 metres supplied in one roll.

4.2.5	Earth Bond System	Minimum Armour Fault Current Carrying capacity of cbles is as following: 11 kV U/G Cable – 11 kA for 1 sec 33 kV Cable – 31.5 kA for 1 sec 66 kV Cable – 31.5 kA for 1 sec 11 kV HTAB Cable – 11 kA for 1 sec Fault current requirement shall be met by Tinned copper braid as per following: 11 kV U/G cables – Three No's 25 sq mm each 33 kV Cable – Four No's of 50 sq mm each 66 kV Cable – Four No's of 50 sq mm each HTAB Cable with copper tape metallic screen – Three No's of 25 sq mm each Length of the copper braided conductor shall be 750 mm. Each copper braided conductor shall be supplied with copper lug, crimped at one end For HTAB Cable with Aluminium wire metallic screen – Tinned copper braid is not required. 1 No's of Aluminium crimping lug of 120 sq mm cross section area shall be provided instead
4.2.6	Suppression of electrical discharges	Following materials are required for use during cable termination : a) Silicone-based compound Required for filling-in minute services/ surface cracks over XLPE insulation. b) Polymeric mastic Required for application over semicon screen, for, eliminating any air-entrapment at any cut point on the surface. It should have sufficient elongation and electrical properties compatible with stress control tube.
4.2.7	Installation. Instruction Sheet	It shall be in English and Hindi language and shall be provided inside every kit.
4.2.8	Paper Measuring Tap	Required for use during cable preparation / terminations.
4.2.9	Identification Tag (for traceability)	a) An aluminum pouch with paper tag & sealing arrangement at one end shall be provided. b) This tag is required to be tied over the cable at one side of the joint. c) The paper tag shall give following information 1) Vendor kit designation 2) Division 3) Breakdown ID/Shutdown ID/Scheme No. 4) Cable section 5) Type of joint 6) Size of Joint 7) Make of joint 8) Voltage class

		9) Serial no. of kit 10) Vendor lot & batch no 11) Month & year of manufacturing 12) Date of installation 13) Name of jointer 14) Name of vendor supervisor 15) Name of BSES supervisor 16) Remarks In addition to above Stainless Steel Tag shall be provided with following details for straight through joint a. Manufacturing month and year (MM/YY format) b. Manufacturer name i.e Comp c. Manufacturer own sl no for future tracing
4.3.0	Technical Particulars	Vendor shall submit Guaranteed Technical Particulars (GTP) as per Annexure A.
4.4.0	Type Tests	i. Termination Kit shall be of type-tested quality from CPRI/ERDA/KEMA/CESI as per the BIS/IEC/IEEE within last 5 years. ii. In case of type test is more than 5 years old but less than 10 years old, bidder has to give undertaking that there is no changes in design. iii. In case of type test report is more than 10 years old, bidder has to conduct type test from CPRI/ERDA/KEMA/CESI as per the BIS/IEC/IEEE without any cost implications to BSES
4.5.0	Testing & Inspection	
	a) Tests	All the routine and acceptance tests shall be carried out as per ESI guidelines. (Also refer Annexure -C)
	b) Inspection	1) Buyer reserves the right to witness all tests specified on individual H. S. components, Moulded components or completed Cable Termination Kit. 2)Buyer reserves the right to inspect Cable Termination Kit at the Seller's works at any time, prior to dispatch, to verify compliance with the specification. 3) In-process and final inspection call intimation shall be given in 10 days advance to purchaser.
	c) Test Certificates	Three sets of complete Test Certificates (Routine & Acceptance tests) shall be submitted along with the delivery of Cable Termination Kits.
4.6.0	Documents	"Documents" refer to Documents, Data, Manuals, etc. (Scanned copy of signed documents also shall be part of entire soft file (e-file) or CD.)

4.6.1	Along with the Bid	Vendor shall submit signed 3 sets (plus 1 set of soft copy) of following documents: a) GTP (duly filled-in) (as per Annexure - A). b) Cross-sectional drawings for components Assembly c) Type Test Certificates d) Complete Catalogue and Instructions. e) Any other document.
4.6.2	After Award of Contract	Vendor shall submit signed 2 sets (plus 1 set of soft copy) of above mentioned documents within 15 days, for Purchaser's approval.
4.6.3	"As-Built" documents	Final signed "As-built" documents for the equipment in 3 sets (hard copy), 1 no. soft copy and 1 no. CD. These documents shall include signed Routine & Acceptance Test Certificates also.
4.7.0	Packing, Marking, Shipping, Handling and Storage	Every component/kit/box shall be properly sealed/ packed for protection against damage.
a)	Identification Labels:	Markings / Labels shall be on both sides of every packed box. 1) Identification number/type designation (as per manufacturer's standard) 2) Voltage grade, size, description of the Kit (including the voltage grade, size, type of the cables, for which it is to be used) 3) Batch no., lot no., etc. 4) Quantity 5) a) Purchase Order no. & date b) Purchaser's name c) BSES's SAP code number 6) Weight (kg) of each Cable Termination Kit and of each box containing kits. 7) Manufacturer's name 8) Month & Year of Manufacturing 9) Date of packing, Shelf life (if applicable) 10) In case, the termination kit is for RMU, following text shall be written in bold letters, with higher font size : "For RMU Application".
b)	Transit damage	The seller shall be responsible for any transit damage due to improper packing.

5.0.0 Quality Assurance (QA)

5.1.0	Vendor's Quality Plan (QP)	To be submitted for Purchaser's approval.
5.2.0	Sampling Method	Sampling Method for quality checks shall be as per manufacturer's standard practice / ESI guidelines and Purchaser's prior approval shall be taken for the same.
5.3.0	Inspection Hold-Points	To be mutually identified, agreed and approved in Quality Plan.

6.0.0 Deviations

6.1.0.	Deviations	a) Deviations from this specification shall be listed by bidder clause wise along with optional offer and has to submit the list along with bid./quotation. BSES will review the deviations and if BSES is agreed with the deviation, seller has to take written confirmation from BSES on deviation during tender evaluation.. b) In the absence of any list of deviations from the Seller with bid as well as written confirmation from BSES on deviations, it will be assumed by the Buyer that the Seller complies with the Specification fully. c) Any deviations mentioned in any other submitted bid documents (i.e.in filled GTP, Catalog, BSES old approval, buyer's/seller's standards etc) by seller without separate deviation sheets will not consider as a deviation from this tech spec at any stage of contract.

7.0.0 Delivery

7.1.0.	Delivery	Despatch of Material: Vendor shall despatch the material, only after the Routine Tests/Final Acceptance Tests (FAT) of the material witnessed/waived by the Purchaser, and after receiving written Material Despatch Clearance (MDC) from the Purchaser.

8.0.0 Inspection Expenses

Not Applicable

9.0.0 Penalty

Joint/Termination failure under warranty in regards to poor quality joint, poor work man ship, etc. shall be in the account of vendors. All kind of losses due to Joint/Termination failure shall be recovered from vendor.

Annexure – A: Guaranteed Technical Particulars (GTP)

The Seller is deemed to have examined all parts of the Specification documents and to have been fully informed, as to the nature of work and the conditions related to its performance.

S No.	Description	Purchase requirement	Vendor's data
1	Manufacturer's name		
2	Purchase Order no. & date		
3	Guarantee Period (minimum)	60 Months (from date of commissioning) / 66 Months (from date of receipt at Purchaser's store), whichever is earlier	
4	Applicable IS / IEC Standard followed by Vendor (incl. type test standard)		
5	Voltage Grade (kV)		
5.1	Lightning Impulse Voltage Withstand Test		
5.2	4Uo AC voltage withstand test for 4 hours	To be conducted on Installed joint at works	
6	Continuous operating temperature	90 deg. C	
7	Functional Requirements		
7.1	Method of Stress Control and Discharge Suppression		
7.2	Method of Insulation build-up and screening		
7.3	Method of earth bond a) Size and no. of braids b) Size of armour support c) No. of hose clips		
7.4	Method of mechanical protection a) for 3-core Cable b) for 1-core Cable		
7.5	Method of protection against corrosion (type & coating thickness of protective layer on steel mat)		
7.6	Method of conductor continuity a) For crimping connector b) For mechanical connector		

8	Description of items in the Kit, which are imported /sourced From Principal /Sub-suppliers		
9	Names of items in the Kit and their respective shelf life (months I years)		
10	Kit Content Table (KCT) enclosed? (Refer Annexure — B)	Yes / No	
11	Drawing for connector (ferrule) enclosed	Yes / No (If yes, mention the document reference)	
12	Is Annexure - D (Technical Deviation Sheet) duly filled-in?		
13	Packing (Qty) i) Packing of every Kit h) Group Packing	1 no -- No. of Kits per Box -- No. of Boxes	
14	Installation Procedure enclosed?	Yes / No (If yes, mention the document reference)	
15	Quality Assurance Plan (QAP for raw materials, in-process inspection, factory testing) is enclosed?	Yes / No	
16	Whether all heat-shrinkable and moulded components of the kit meet the requirements of and have been tested in accordance with EA TS -09-1 3.(for heat-shrinkable joints)	Yes / No (If yes, details of test report no. /Date /name of test laboratory to be mentioned.)	
17	Type Test Reports (TTR) (Relevant test report no. & date, With type, size, other details of each type of Kit.) a) Prepared Joint: CPRI TTR as per BIS / IEC enclosed? b) Loose Components: CPRI TTR as per EA TS 09-13 enclosed?	 Yes/No Yes/No	

18	Printing details on each of the Heat- shrinkable and Moulded components	(Mention the text, presently printed on each of the component)	
19	OFC kit (For OFC embedded cable only 66Kv, 3CX300 sqmm , 33Kv, 3cx400 sqmm and 11kv, 3cx400 sqmm)	Yes/no	

Annexure – B: Kit Content Table (KCT)

Vendor shall submit KCT as a consolidated table, consisting of all data, such as:

A. Heading

1. Voltage grade, size, description of the Kit
(Including the voltage grade, size, type of the cables, for which it is to be used)

2. Type designation (as per manufacturer's standard)

B. Details / Parameters

(For each component/item of the KCT)
1. Lot no. /Batch no., etc.
2. Item number (manufacturer's standard)
3. Description
a) Material, type, make and grade
b) Dimensions cross sectional area
c) Colour,
d) Other description, if any
4. Function of the item
5. Quantity
6. Make/Name/Location of manufacturer/sub-vendor
7. a) Minimum supplied (or in expanded form) diameter
   b) Maximum freely recovered diameter
8. a) Minimum supplied (or in expanded form) thickness
   b) Maximum freely recovered thickness

C. Notes on the KCT

Markings, printings, other details for individual/group of components are to be mentioned on KCT. For example:
a) Printing of item code, size, batch no., etc.
b) Printing on components
c) Other embossing or engraving, it any.

(Note: Vendor may attach an Annexure, for any additional information, if required.)

Annexure – C: Routine and Acceptance Test

A. Visual Examination

Condition of selected items / components, as per sampling method, shall be recorded. Some of the normal check-points can be as follows:

1. Every component shall be verified in quantity and description as per KCT.
2. All items shall be free from any defects, pin holes, cracks, etc.
3. Metallic components to be free from sharp edges.

B. Measurements of Dimensions

(Required / observed dimension — length, diameter, etc.)

1. Supplied dimensions
2. Recovered dimensions

C. Destructive Testing

On various heat-shrinkable / moulded components of ready Kits

(Items 3 and 4 are applicable only for heat-shrinkable components)

1. Tensile Strength
2. Wall Thickness Ratio
3. Heat Shock
4. Longitudinal Change, after full recovery
5. Ultimate Elongation
6. Low Temperature Flexibility
7. Dielectric Strength
8. Volume Resistivity

D. Routine Test Reports (RTR)

(Typical)

Each RTR shall clearly indicate P.O. no. & date and also BSES's SAP code no. RTR shall record the serial numbers of the kits selected, as per vendor's sampling method. Following details, besides vendor's/manufacturers standard check-points, shall appear in every RTR.

Annexure – D: Technical Deviation Sheet

Sr No.	Clause No.	Deviation

Annexure – E: Service Conditions

(Atmospheric conditions at Site)

1	Delhi	
a)	Average grade Atmospheric Condition:	Heavily Polluted, Dry
b)	Maximum altitude above sea level	1000 M
c)	Ambient Air temperature	Highest 50 deg C, Average 40 deg C
d)	Minimum ambient air temperature	0 deg C
e)	Relative Humidity	90 % Max
f)	Thermal Resistivity of Soil	150 Deg. C cmm
g)	Seismic Zone	4
h)	Rainfall	750 mm concentrated in four months

Annexure – F: Bimetallic Aluminium / Copper Lug

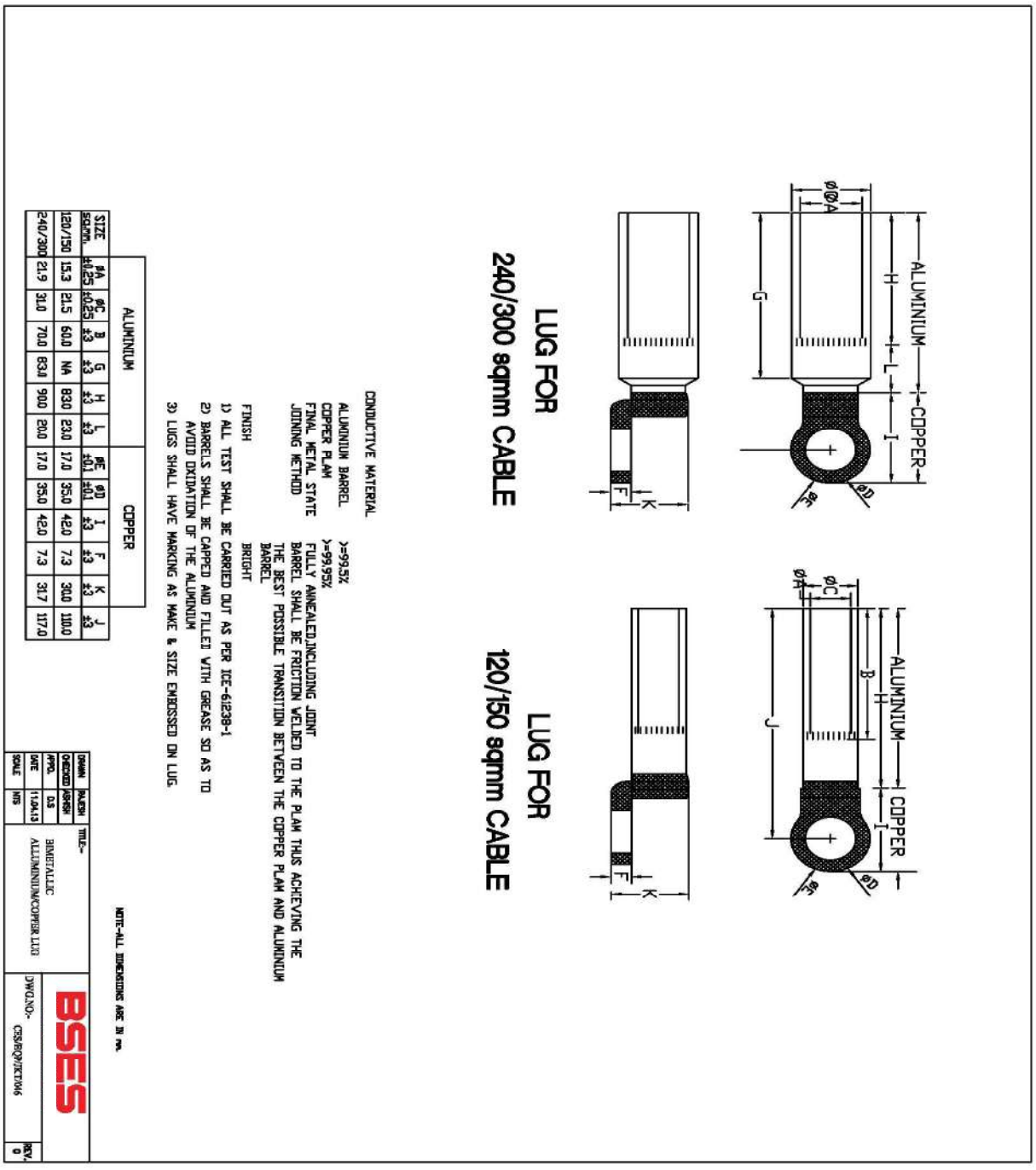

SIZE sq.mm.	ALUMINIUM							COPPER			
	øA ±0.25	øC ±0.25	B ±3	G ±3	H ±3	L ±3	øE ±0.1	øD ±0.1	I ±3	F ±3	K ±3	J ±3
120/150	15.3	21.5	60.0	NA	830	230	17.0	35.0	42.0	7.3	30.0	110.0
240/300	21.9	31.0	70.0	834	900	200	17.0	35.0	42.0	7.3	31.7	117.0

Annexure – G: Aluminum/Copper Lug For XLPE Cable

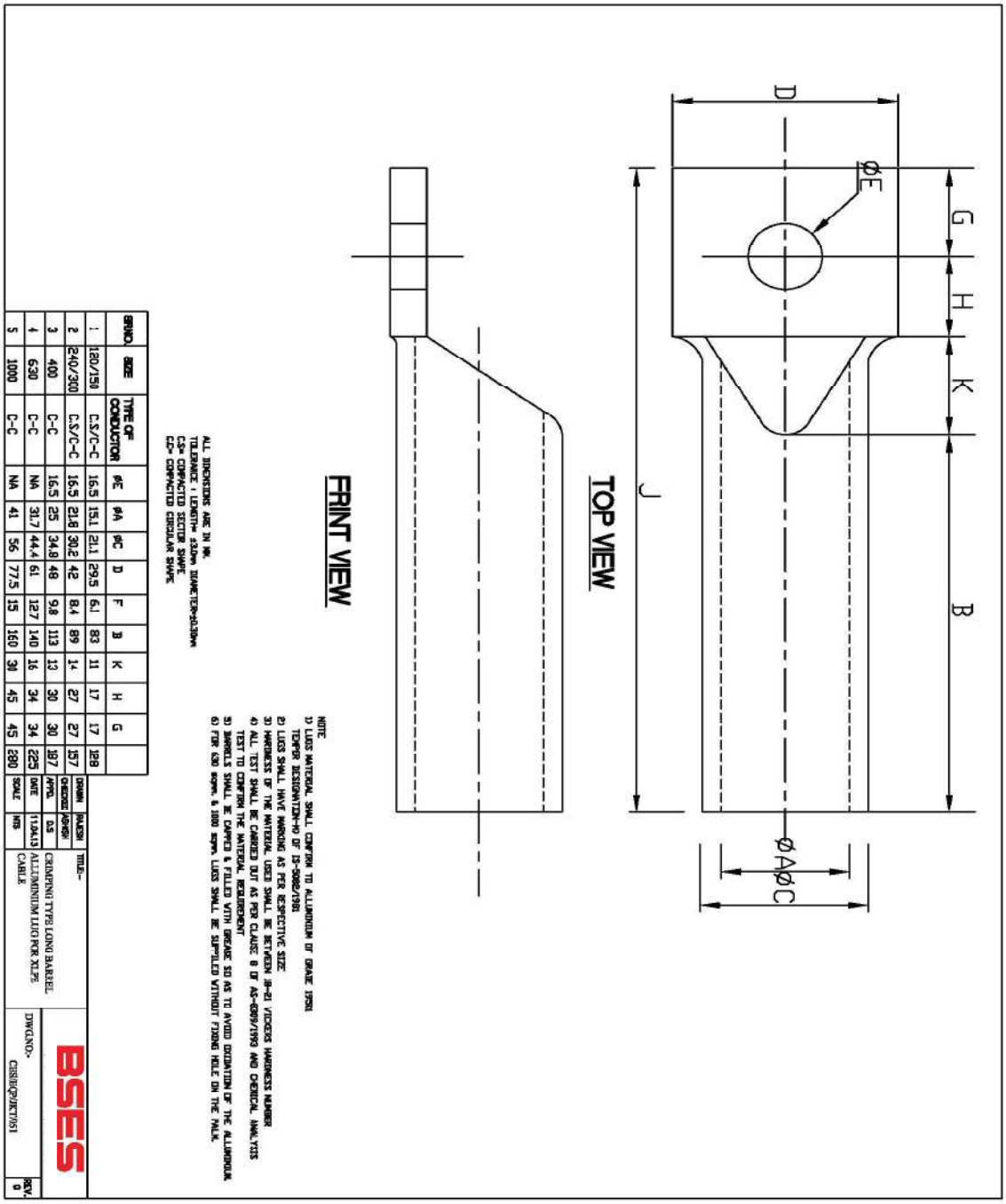

NOTE
1) LUGS MATERIAL SHALL CONFORM TO ALUMINIUM OF GRADE 19201 TEMPER DESIGNATION-H0 OF IS-5082/1981
2) LUGS SHALL HAVE MARKING AS PER RESPECTIVE SIZE
3) HARDNESS OF THE MATERIAL USED SHALL BE BETWEEN 28-32 VICKERS HARDNESS NUMBER
4) ALL TEST SHALL BE CARRIED OUT AS PER CLAUSE 8 OF AS-6809/1990 AND CHEMICAL ANALYSIS TEST TO CONFIRM THE MATERIAL REQUIREMENT
5) BARRELS SHALL BE CAPPED & FILLED WITH GREASE SO AS TO AVOID OXIDATION OF THE ALUMINIUM
6) FOR 630 sqmm & 1000 sqmm, LUGS SHALL BE SUPPLIED WITHOUT FIXING HOLE ON THE PALM.

ALL DIMENSIONS ARE IN MM.
TOLERANCE : LENGTH= ±3.0mm DIAMETER=±0.50mm
CS= COMPACTED SECTOR SHAPE
CC= COMPACTED CIRCULAR SHAPE

SRNO.	SIZE	TYPE OF CONDUCTOR	ØE	ØA	ØC	D	F	B	K	H	G	
1	120/150	C.S./C-C	16.5	15.1	21.1	29.5	6.1	83	11	17	17	128
2	240/300	C.S./C-C	16.5	21.8	30.2	42	8.4	89	14	27	27	157
3	400	C-C	16.5	25	34.8	48	9.8	113	13	30	30	197
4	630	C-C	NA	31.7	44.4	61	127	140	16	34	34	225
5	1000	C-C	NA	41	56	77.5	15	160	36	45	45	280

DRAWN	RAJESH	TITLE-
CHECKED	ASHISH	CRIMPING TYPE LONG BARREL ALUMINIUM LUGS FOR XLPE CABLE
APPD.	DJS	
DATE	11/04/13	
SCALE	NTS	DWG.NO- CESI/EQP/ELECT/051

BSES

REV- 0

Annexure-H

SOP FOR REPAIRING OF CABLE FAULT (Shall be part of PO)		
Sl. No.	Activity	Responsibility
Initiation		
1	Identify and isolate fault and inform GNIIT in case of cable fault	Break down team
2	Updation of the details in OMS against respective feeder tripping event.	GNIIT
Fault Location		
1	Information sent to FLC team and SDO.	GNIIT
2	Mobilize FLC team and cable jointing contractor.	SDO
3	Identification of fault location	FLC Team
Preparation for Jointing		
1	Seeking permission from road owning agency	SDO
2	Payment of RR charges to Road owning agency	Finance
3	Digging	Cable jointing contractor
4	Cut faulty section and Pre-test (HV test) cable for multiple fault	Cable jointing contractor
5	BOQ estimation for jointing work (type, size and length of cable, type of jointing kit)	Cable jointing contractor
6	Filling material reservation slip (MRS) in SAP	SDO
7	Issuing and transporting material from store.	Cable jointing contractor
Jointing		
1	Cable preparation (overlap length of cable, slide of armour, build up with inner sheath etc)	Cable jointing contractor (for jointing details refer to manufacturer instruction manual)
2	Copper tape shields	
3	Core preparation	
4	Location of parts in completed joints	
5	Earthing of connection	
6	Completion of joints	
7	Take Photographs before, during and after jointing and send to CES	SDO
8	Supervision during jointing	SDO
9	Sending failed joint to Division store	Cable jointing contractor
Completion and reporting		
1	Intimate to breakdown team about joint completion.	Cable jointing contractor
2	Conduct HV test	Break down team
3	Restore of Supply through jointed cable	Break down team
4	Backfilling, compaction of excavated soil and removing of excess earth from the site	Cable jointing contractor

5	Completion information in Job Card (Details of work done, material consumption, location, feeder name and joint tag no., date, supervisor name, jointer name) sent to SDO	Cable jointing contractor
6	Above information sent to GNIIT	SDO
7	Send information about GPS location of Cable fault to GIS	SDO
8	Daily report of cable jointing to CES	Division Head
9	Updating of information in OMS including supervisor name, jointer name, feeder name	GNIIT
10	Information to include GPS location of cable fault.	GNIIT

Special Note-

1) Joints to be done preferably during day. In case of constraints, DGM (O&M) to authorize for night time jointing with supervisor
2) Daily joint report to be shared with CES
3) Bi-monthly analysis of faulty joint for ensuring warranty compliance to be organized at circle level by contractor in presence of DGM (O&M) and CES
4) Certification of job card for payment by DGM (O&M) subject to OMS compliance CES to check any gaps.
5) After completion of jointing (33kV and 66kV), all the joints shall be covered with RCC coffin. Coffin shall be filled with white sand complete from the hole provided at the top of the coffin.

BSES

Technical Specification

Of

APPROVED MAKES & VENDORS OF EQUIPMENTS SUPPLY

Specification no – BSES-TS-317-APPEQ-R2

Rev:		2
Date:		28 Nov 2025
Prepared by	Shanmugam B	
Reviewed by	Uttam Shukla	
Approved by	Deepti Sharma	

Contents

1.0 SCOPE 3
2.0 APPROVED MAKES 3

1.0 SCOPE

- This specification applies to the design, engineering, manufacturing/fabrication, assembly, inspection, testing before dispatch, packing, forwarding, supply and delivery at destination by suitable transport, unloading at site, installation and commissioning of Electrical Substation equipments on Turnkey basis and as specified in the following sections of this document.
- All the Technical specification shall be followed for Electrical equipments, RTU/SCADA, DR equipments, etc. for it's detailed engineering wherever applicable and as per BSES requirements & based site conditions.
- All the makes & models Electrical equipment's shall be supplied as per BSES requirements only without cost implications.

2.0 APPROVED MAKES

Technical Specification of Approved Makes & Vendors

S No.	MANUFACTURER & VENDORS	REMARKS
1.0	**POWER TRANSFORMER**	
1.1	BHEL	
1.2	BHARAT BIJLEE LTD	
1.3	CG POWER & INDUSTRIAL SOLUTIONS POWER LTD	
1.4	HITACHI ENERGY LTD	
1.5	SCHNEIDER ELECTRIC INFRASTRUCTURE LTD	
1.6	VOLTAMP TRANSFORMER LTD	
2.0	**STATION TRANSFORMER**	
2.1	CG POWER & INDUSTRIAL SOLUTIONS POWER LTD	
2.2	DANISH POWER LTD	
2.3	MARSONS ELECTRICAL INDUSTRIES	
2.4	SCHNEIDER ELECTRIC INFRASTRUCTURE LTD	
2.5	TOSHIBA	
3.0	**66KV,33KV SF6 GAS INSULATED SWITCHGEAR (GIS)**	
3.1	BHEL	
3.2	CG POWER & INDUSTRIAL SOLUTIONS POWER LTD	
3.3	GE VERNOVA T&D INDIA LTD	
3.4	HYOSUNG T&D INDIA PVT LTD	
3.5	SIEMENS LTD	
3.6	ABB LTD	
4.0	**33KV SF6 GAS SWITCHGEAR**	

4.1	BHEL	
5.0	**33KV, 11KV SWITCHGEAR**	
5.1	ABB LTD	
5.2	CG POWER & INDUSTRIAL SOLUTIONS POWER LTD	
5.3	SCHNEIDER ELECTRIC INFRASTRUCTURE LTD	
5.4	SIEMENS LTD	
6.0	**66KV POWER CABLE**	
6.1	DYNAMIC	
6.2	HAVELLS INDIA LTD	
6.3	KEC INTERNATIONAL LTD (RPG CABLES LTD)	
6.4	KEI INDUSTRIES LTD	
6.5	STERLITE POWER TRANSMISSION LTD	
6.6	UNIVERSAL CABLES LTD	
7.0	**33KV POWER CABLE**	
7.1	DYNAMIC	
7.2	GEMSCAB INDUSTRIES LTD	
7.3	HAVELLS INDIA LTD	
7.4	KEC INTERNATIONAL LTD (RPG CABLES LTD)	
7.5	KEI INDUSTRIES LTD	
7.6	STERLITE POWER TRANSMISSION LTD	
7.7	TORRENT ELECTRICALS LTD	
7.8	UNIVERSAL CABLES LTD	
8.0	**11KV POWER CABLE**	
8.1	DYNAMIC	
8.2	GEMSCAB INDUSTRIES LTD	
8.3	HAVELLS INDIA LTD	
8.4	KEC INTERNATIONAL LTD (RPG CABLES LTD)	
8.5	KEI INDUSTRIES LTD	
8.6	PARAMOUNT COMMUNICATIONS LTD	
8.7	POLYCAB WIRES PVT LTD	
8.8	STERLITE POWER TRANSMISSION LTD	
8.9	TORRENT ELECTRICALS LTD	
8.10	UNIVERSAL CABLES LTD	
9.0	**LT(1.1 KV) POWER, CONTROL & COMMUNICATION CABLES**	
9.1	GEMSCAB INDUSTRIES LTD	
9.2	HAVELLS INDIA LTD	

9.3	KEC INTERNATIONAL LTD (RPG CABLES LTD)	
9.4	KEI INDUSTRIES LTD	
9.5	PARAMOUNT COMMUNICATIONS LTD	
9.6	POLYCAB WIRES PVT LTD	
10.0	**66KV OUTDOOR CIRCUIT BREAKERS**	
10.1	ABB LTD	
10.2	CG POWER & INDUSTRIAL SOLUTIONS POWER LTD	
10.3	SIEMENS LTD	
10.4	GE VERNOVA T&D INDIA LTD	
11.0	**11KV, 66KV OUTDOOR CT, PT**	
11.1	ABB LTD	
11.2	BHEL	
11.3	CG POWER & INDUSTRIAL SOLUTIONS POWER LTD	
11.4	GE VERNOVA T&D INDIA LTD	
11.5	KAPCO ELECTRIC PVT LTD	
11.6	MEHRU ELECTRICAL & MECHANICAL ENGINEERS PVT LTD	
12.0	**33KV, 66KV OUTDOOR CVT**	
12.1	ABB LTD	
12.2	CG POWER & INDUSTRIAL SOLUTIONS POWER LTD	
12.3	GE VERNOVA T&D INDIA LTD	
12.4	MEHRU ELECTRICAL & MECHANICAL ENGINEERS PVT LTD	
12.5	SIEMENS LTD	
13.0	**33KV, 66KV ISOLATORS**	
13.1	ABB LTD	
13.2	SCHNEIDER ELECTRIC LTD	
13.3	SIEMENS LTD	
14.0	**33KV, 66KV LIGHTNING ARRESTER**	
14.1	CG POWER & INDUSTRIAL SOLUTIONS POWER LTD	
14.2	ELECTROLITES POWER PVT LTD	
14.3	LAMCO INDUSTRIES PVT LTD	
14.4	OBLUM ELECTRICAL INDUSTRIES PVT LTD	
14.5	RAYCHEM RPG PVT LTD (Polymer type only approved)	
14.6	SIEMENS LTD	
15.0	**11KV CAPACITOR BANK**	

15.1	ABB LTD	
15.2	CONQUERENT CONTROL SYSTEMS PVT LTD	
15.3	SHREEM ELECTRIC LTD	
15.4	UNIVERSAL CABLES LTD	
16.0	**33KV, 66KV CONTROL & RELAY PROTECTION PANEL**	
16.1	HITACHI ENERGY LTD	
16.2	SCHNEIDER ELECTRIC INFRASTRUCTURE LTD	
16.3	SIEMENS LTD	
17.0	**NUMERICAL CONTROL & PROTECTION RELAYS (Refer CRPTechnical specification for details)**	
17.1	HITACHI ENERGY LTD	
17.2	ABB LTD	
17.3	SIEMENS LTD	
17.4	SCHNEIDER ELECTRIC LTD	
18.1	**REMOTE TERMINAL UNIT (RTU) / SUBSTATION AUTOMATION(SAS)**	
18.2	HITACHI ENERGY LTD	
18.3	SCHNEIDER ELECTRIC INFRASTRUCTURE LTD	
18.4	SIEMENS LTD	
19.0	**DISTURBANCE RECORDER**	
19.1	WIZTRIC	
20.0	**ACDB & BMK**	
20.1	CMKL	
20.2	EATHUN	
20.3	NEC	
20.4	NEPTUNE INDIA LTD	
20.5	POPULAR SWITCHGEARS PVT LTD	
20.6	SHIVALIC	
21.0	**JOINTING & TERMINATION KITS**	
21.1	3M ELECTRO & COMM. INDIA (P) LTD.	
21.2	COMPAQ INTERNATIONAL	Upto 11kV level only.
21.3	RAYCHEM RPG LTD	
21.4	YAMUNA DENSON	All Voltage level expect 3x300Sq.mm 66kV cable

22.0	**INDOOR & OUTDOOR LIGHTING**	
22.1	BAJAJ ELECTRICALS LTD	
22.2	CROMPTON GREAVES LTD	
22.3	SURYA ROSHNI LTD	
22.4	PHILIPS ELECTRONICS INDIA LTD	
22.5	HAVELLS INDIA LTD	
23.0	**OVERHEAD LINE ACCESSORIES (Clamps, Connector, Line Hardware & Accessories)**	
23.1	BURMA	
23.2	KLEMMEN ENGINEERING	
23.3	LEGION	
23.4	RASHTRA UDHYOG LTD	
23.5	RAYCHEM RPG PVT LTD	
24.0	**DISC AND PIN INSULATORS**	
24.1	ADITYA BIRLA INSULATORS	
24.2	BHEL	
24.3	IEC	
24.4	MORDEN INSULATORS LTD	
24.5	W.S.INDUSTRIES	
25.0	**STEEL TUBULAR POLES**	
25.1	ADVANCE STEEL TUBES LTD	
25.2	GOOD LUCK STEEL TUBES LTD	
25.3	FABRICO (INDIA) PVT LTD	
25.4	RAMA STEEL TUBES LTD	
26.0	**STEEL STRUCTURE**	
26.1	TATA STEEL	
26.2	SAIL	
26.3	RINL	
26.4	JSW STEEL	
26.5	NMDC	
27.0	**ACSR CONDUCTORS**	
27.1	DYNAMIC CABLES LTD	
27.2	HINDUSTAN VIDYUT PRODUCTS LTD	
27.3	LUMINO INDUSTRIES LTD	
27.4	MAHAVIR TRANSMISSION LTD	

27.5	ANVIL CABLES PVT LTD	
28.0	**BATTERY BANK (Li Ion / Ni-Cd)**	
28.1	HBL ENGINEERING LTD	Ni-Cd
28.2	AMCO SAFT BATTERIES INDIA PVT LTD	Ni-Cd
28.3	COSLIGHT INDIA TELECOM PVT LTD	Li-Ion
28.4	LOHUM CLEANTECH PVT LTD	Li-Ion
29.0	**BATTERY CHARGER CUM WITH DCDB**	
29.1	CHABI ELECTRICALS	
29.2	MASS TECH CONTROLS PVT LTD	
29.3	CADYNE AUTOMATICS LTD	
29.4	AMARA RAJA ELECTRONICS LTD	
30.0	**CABLE SEALING**	
30.1	MCT BRATTBERG INDIA PVT LTD.	
30.2	ROXTEC INDIA PVT LTD	
30.3	UGA CABLE AND PIPE SEALING SYSTEM INDIA PVT LTD	
32.0	**GAS HANDLING KIT (GIS/BLUE GAS/GREEN GAS)**	
32.1	DILO	
32.0	**NIFPS**	
32.1	CTR	
32.2	EASUN MR TAP CHANGER(P)LTD	
32.3	TRI-PARULEXFIRE PROTECTION SYSTEM	
32.4	VENDERE SALES	
32.5	VIMAL FIRE CONTROLS PVT LTD	
33.0	**FIRE SAFETY**	
33.1	AKS APEX FIREL ENGINEERING PVT LTD	
33.2	AND FIRE & SAFETY PVT LTD	
33.3	FOAM TECH ANTIFIRE PVT LTD	
33.4	SAFEX FIRE SERVICES PVT LTD	
33.5	STAR FIRE & SECURITY SYSTEM PVT LTD	
33.6	RAPID SAFETY SOLUTIONS	
34.0	**AIR CONDITIONING SYSTEM**	
34.1	CARRIER MIDEA INDIA PVT LTD	
34.2	LG ELECTRONICS.	
34.3	VOLTAS	

35.0	**EOT Crane**	
35.1	REVA INDUSTRIES INDIA PVT LTD	
35.2	DEMAG	
36.0	**TRANSFORMER OIL**	
36.1	APAR INDUSTRIED LTD	
36.2	SAVITA OIL TECHNOLOGIES LTD	
36.3	RAJ PETRO SPECIALITIES PVT LTD	
37.0	**HIGH MAST**	
37.1	BAJAJ ELECTRICALS LTD	
37.2	SKIPPER LTD	
38.0	**REINFORCEMENT STEEL**	
38.1	TATA STEEL	
38.2	SAIL	
38.3	JSW STEEL	
39.0	**CEMENT**	
39.1	AMBUJA	
39.2	ULTRA TECH	

BSES Rajdhani Power Limited
BSES Bhawan, Nehru Place, New Delhi- 19

TECHNICAL SPECIFICATION

TRAINING AND INSPECTION

Prepared by	Sonia Mittal	Mittal	Rev: 0
Reviewed by	Uttam Shukla	Shukla	Date: 21.11.2025
Approved by	Deepti Sharma	Deepti	

Training and Inspection

The Scope includes training and inspection of BRPL Officials at site and at OEM's factory on overall product and all its sub-components.

1. Training of BRPL officials

The Scope includes training of BRPL Officials at site and at OEM's factory on overall product and all its sub-components.
BRPL official will include departmental personnel from Operation & Maintenance, Protection, SCADA and Engineering.
Training will include, but not limited to, verbal and written communication on aspects ranging from operation, maintenance, safety, features and functions.
It will be the responsibility of contractor to arrange the following:

i) To arrange Air travel and Taxi for local conveyance at the contractors cost for the engineers/ officers deputed for carrying out the inspection of the material.
ii) To arrange the minimum 4 star accommodation at the contractors cost for the boarding/ lodging and meals thereof for the engineers/ officers deputed for carrying out the inspection of the material.
ii) To depute his competent representative to impart training of the material.

Following Table defines man days required for training of each equipment.

S. No.	Equipment	Training at Site (No. of Days)	Training at Factory (No of Days)	No. of BRPL Representatives for Factory Visit
1	C&R Panels	5	2	3
2	Power Transformer	1	1	2
3	11 kV Panels	1	2	3
4	SCADA – RTU	3	2	2
5	Battery Bank	1	0	0
6	Battery Charger	1	0	1
7	11kV APFC with Controller	2	0	0
10	Video Surveillance System	1	0	0
11	Fire Detection System	1	0	0
12	Fire Suppression System	1	0	0
13	GIS Panels	3	3	4
14	Each of the other equipment/testing instrument	1	0	0

2. Inspection & Testing

2.1 Independent Inspection

BRPL may at his discretion delegate inspection and testing of material to an independent inspector.

2.2. Dates for Inspection and Testing

The Contractor shall give the Owner reasonable notice (minimum 10 days) in writing of the date and the place at which any material will be ready for testing as provided in the Contract and Owner shall attend at the place so named within fifteen (15) days of the date, which the Contractor has stated in his notice. The Owner shall give the Contractor twenty four (24) hours notice in writing of his intention to attend the tests. The above notices shall be given at first by the quickest possible means and confirmed later in writing.

If on receipt of the Contractor's notice of testing, the Owner's representative does not find the material to be ready for testing, the costs incurred for re-deputation of inspector and re-inspection shall also be in Contractor's Scope.

2.3 Inspection charges:

Detailed Breakup of no. of inspectors for each inspection shall be as under.

S. No	Equipment	No of Inspectors
1	Power Transformer	2
2	CRP	3
3	RTU	2
4	HT Panels	2
5	For all other equipments	1
6	For all testing and measuring instruments	2
7	For all Stage inspections	1

It will be the responsibility of contractor to arrange the following:

i) Cost of all the inspections within India and abroad (including re inspections) including flight Tickets, local conveyance, Boarding and lodging (Minimum 4 Star Hotel for India and Minimum 4 Star for Abroad) shall be in scope of Vendor. The Factory visits will be held at OEM Factory only.

ii) To depute his authorized representative to associate during the inspection of the material.

In case of fake call or rejection of material or any other cause, the Owner is not liable for reimbursement of the expenditure so incurred by the contractor.

2.4 Rejection

If as-a-result of the inspection, examination or testing as per approved QAP, the Owner decides that any equipment is defective or otherwise not in accordance with the Contract, he may reject such equipment and shall notify the Contractor there-of, immediately. The notice shall state the Owner's objections with reasons.
The Contractor shall then with all speed make good the defect or ensure that any rejected equipment complies with the Contract.
If the Owner requires such Equipment to be re-tested, the tests shall be repeated under same terms and conditions. All costs incurred for re-deputation of inspector and re-inspection shall also be in Contractor's Scope.

BSES Rajdhani Power Limited
BSES Bhawan, Nehru Place, New Delhi- 19

VOLUME – II

SCHEDULE AND ANNEXURE

BSES Rajdhani Power Limited
BSES Bhawan, Nehru Place, New Delhi- 19

VOLUME – II

SCHEDULE AND ANNEXURE

Annexure-O

Technical specification for New Grids 24x7 O&M support

Scope:

24x7 (8 Hours per shift) O&M support for equipment supplied by bidder inclusive of GIS and Terminations after Handing over of Grid by Vendor to BRPL for 6 months from the date of handover

O&M Shall cover following

Operation:

- Handling equipment with training (on job) to BRPL staff.
- Knowledge of sequence of operation (bidder to provide flow chart for the same in laminated form so that the same may be pasted on grid notice board).
- Competency level in electrical as well as mechanical operations.

Breakdown:

- Attending any breakdown in equipment supplied and replacement of faulty parts (within 10-12 hrs).
- Presence in experienced engineer during entire restoration sequence till equipment get energized.

General Guidance:

- Work force required to attend the outages – built a QRT (quick response team to attend breakdown during that tenure).
- Tools tackles and spares necessary for attending outage.- 1 set of special tools to be incorporated in tech doc to be handed over to user during HOTO.
- Skill level suitable to carry out the operation for 66kV/33kV.

Manpower Requirement:

- One Operator (Minimum ITI qualified), one Skilled worker and one reliever shall be assigned per shift.
- Qualification documents of Manpower assigned shall be submitted to BRPL for approval.

SCHEDULE – A

GENERAL PARTICULARS

(This shall from part of Technical Bid)

1.0 Bidder

1.1	Name	:	
1.2	Postal Address	:	
1.3	Telegraphic Address	:	
1.4	Telex number / Answer back code	:	
1.5	Phone(s)	:	
1.6	Name and Designation of the person who should be contacted in case of clarifications / details etc. not received expeditiously form the officer mentioned in item 1.6 above	:	
1.7	Brief write-up giving details of the organization, years of establishment and and commercial production activities, manufacturing, fabrication, shop testing, erection, testing, commissioning and after-sales service facilities, key personnel with their qualifications and experience, collaboration agreements, if any number of employees in various categories and last three (3) years turn over	:	
2.0	Bid Validity	:	
3.0	All the Schedules filled-in	:	Yes
4.0	All the Deviations brought out in Schedule – E1and E2	:	Yes
5.0	All the drawings, write-ups, literature, leaflets, calculations, details, etc as called for in the specification attached	:	Yes
6.0	Is the Bidder agreeable to undertake this contract, if deviations stipulated by him are not acceptable to the Purchaser	:	Yes/No

Schedules & Annexure **Schedule A**

Bidders Name : _____

Signature : _____

Name : _____

Designation : _____

Seal of Company Date : _____

SCHEDULE – B

LIST OF DRAWINGS ENCLOSED WITH BID

(This shall form part of Technical Bid)

S.No.	Drawing No	Title
1	2	3

Name of Firm : _____

Signature of Bidder : _____

Designation : _____

Date : _____

Seal of Company

SCHEDULE – C1

11KV INDOOR SWITCHGEAR

Sr. No.	Description	Incomer	Bus coupler	Outgoing	Capacitor	Transformer
1	**Switchgear assembly**					
1.1	Make					
1.2	Type					
1.3	Reference standard					
1.4	Voltage (normal / Max. KV)					
1.5	Frequency (HZ)					
1.6	Short circuit rating					
1.7	Short time current and duration					
A	Impulse withstand (KV peak)					
B	1min. Power freq. withstand test(KV rms)					
2	**Construction**					
2.1	Metal clad construction (Yes / No)					
2.2	Degree of Portion					
2.3	Minimum thickness of sheet metal used (mm)					
2.4	Draw out feature provided for					
A	Breaker with service, test & isolated position - Yes /No					
B	Voltage Transformer- Yes / No					
C	Protection relays -Yes /No					
2.5	Breaker cubicle					
A	Cubical door can be closed with breaker in test and isolated position -Yes / No					
B	Working zone units from floor level (mm)					
2.6	All meters, switchgear & relays flush mounted type -Yes /No					
2.7	Minimum clear space required					
A	Front for breaker withdrawal (mm)					

B	Rear (mm)					
2.8	Typical vertical section					
A	Overall dimensions					
	i. Length (mm)					
	ii. Breath (mm)					
	iii. Height (mm)					
B	Weight (Kg)					
3	**Bus Bar**					
3.1	Make					
3.2	Material & grade					
3.3	Reference standard					
3.4	Cross section area (mm2)					
3.5	Bus connection (joints)					
A	Silver plated -Yes /No					
B	Conventional made with anti oxide grease -Yes /No					
3.6	Rated continuous current amps					
3.7	Maximum temp. rise at rated continuous current DFG C					
3.8	Short time current and duration KA … secs					
3.9	DC resistance at 85 DEG C (Ω/m/Ø)					
3.10	Minimum clearance of bus bar and connection					
A	Phase to phase (mm)					
B	Phase to earth (mm)					
3.11	Bus bar provided with					
A	Insulation sleeve					
B	Phase barriers					
C	Cast resin shrouds for joint					
3.12	Bus bar supported spacing (mm)					
3.13	Bus bar insulators					
A	Make					
B	Type					
C	Reference standard					
D	Voltage class (KV)					
E	Min. creepage distance (mm)					
F	Cantilever strength Kg/mm2					
G	Net weight (Kg)					

4	**Circuit Breaker**					
4.1	Make					
4.2	Type					
4.3	Reference standard					
4.4	Related Voltage					
4.5	Related frequency					
4.6	Related current and its reference ambient temp					
A	Continuous current to limit the max. temp. rise to 55DEG C for silver plated connections and 40DEG C for conventional connections					
4.7	Related operating duty					
4.8	Symmetrical breaking capacity at rated voltage & operating duty KA rms.					
4.9	Rated making current (Kap)					
4.10	Short time current and duration KA … secs					
4.11	Insulation level					
A	Impulse voltage withstand on 1/50 full wave					
A	1min. Power freq. withstand test(KV rms)					
4.12	Maximum overvoltage factor while switching off					
A	Un loaded transformer					
B	Loaded transformer					
C	Un loaded CABLES					
D	Capacitor					
E	Motors					
4.13	Opening time max. No load condition (ms)					
4.14	Number of permissible breaker operation under vacuum loss					
4.15	At 100% breaking capacity					
A	Opening time Max. (ms)					
B	Arcing time max (ms)					
C	Total break time (ms)					
4.16						
A	Make time (Max) (ms)					
B	Total closing time (ms)					

4.17	Total length of contact travel (mm)					
4.18	No. of breaker operation permission without requiring inspection, replacement of contacts and other main parts.					
A	At 100% rated current					
B	At 100% rated breaking current					
4.19	Types of contents					
4.20	Maximum clearance in air (mm) from live part					
4.21	Between phases					
A	Between live parts and ground					
B	Type of arc control device provided					
4.22	Operating mechanism closing					
4.23	Type					
A	No. of breaker operations stored					
B	Trip free or fixed trip					
C	Anti pumping features provided					
4.24	Operating mechanism tripping					
A	Type					
B	No. of breaker operations stored					
C	Trip free or fixed trip					
D	Anti pumping features provided					
4.25	Spring charging motor					
A	Rating					
B	Make					
C	Voltage and permissible variation(%)					
4.26	Closing coil					
A	Voltage (V)					
B	Permissible voltage variation (%)					
C	Closing current at rated voltage (A)					
D	Power at rated voltage (w)					
4.27	Trapping Coil					

A	Voltage (V)					
B	Permissible voltage variation (%)					
C	Tripping current rated voltage (A)					
D	Power at rated voltage (w)					
4.28	Breaker / Accessories Accessories such as control switch indication lamps etc. furnished as specified. (Please attach separate sheet giving details of all Accessories, inter locks and safety shutters)					
A	Mechanical safety interlock					
B	Automatic safety interlock					
C	Operational interlock					
D	Emergency manual trip					
E	Operation counter					
F	Change / discharge indicator					
G	Manual spring charging facility					
H	Auxiliary switch with 6 No + 6 NC for owner's use					
I	Contacts wear indicator					
4.29	Auxiliary Switch					
A	Switch contacts type					
B	Contacts rating at					
	1) Make & Continuous (Amps)					
	2) Break (Inductive) (Amps)					
4.30	Net weighting of the breaker (Kg)					
4.31	Impact load foundation design (to include dead load plus impact value on opening at maximum interrupting rating) (Kg)					
4.32	On vacuum loss (Amps)					
A	Possible load current breaker (Amps)					
B	Possible fault current breaker (Amps)					
4.33	Overall dimensions					

A	Length (mm)					
B	Breath (mm)					
C	Height (mm)					
4.34	Type test report omidentical breaker furnished					
5	**Control & Indications**					
5.1	Push Button Make					
A	Type & Catalog No.					
B	Contact rating at 110V/220V.D.C					
C	Make & continuous (Amps)					
5.2	LED lamps: Make:					
A	Type & Catalog No.					
B	Watts /Voltage					
C	Lamps & lens replaceable from front with glass cover					
5.3	Selector switch: Make:					
A	Type & Catalog No.					
B	Contact rating					
C	Make & continuous (Amps)					
D	Break (Inductive)(Amps)					
6	**Current Transformer**					
6.1	Make					
6.2	Types & Voltage Level					
6.3	Reference standard					
6.4	C.T ratio as specified					
6.5	Short circuit withstand short time current for 1 sec. - KA rms Dynamic current -KA peak					
6.6	Class of insulation					
6.7	Temperature rise					
6.8	Basic insulation level					
6.9	For metering & protection					
A	CT ratio					
B	Class of accuracy					
C	Rated burden VA					
D	Knee point voltage V					
E	Excitation current at V_K / 4					
F	Rated saturating current Amp					
6.10	For differential & restricted earth fault protection					

A	CT ratio					
B	Class of accuracy					
C	Rated burden VA					
D	Knee point voltage V					
E	Excitation current at V_K / 4					
F	Rated saturating current Amp					
6.11	For restricted earth fault protection					
A	CT ratio					
B	Class of accuracy					
C	Rated burden VA					
D	Knee point voltage V					
E	Excitation current at V_K / 4					
F	Rated saturating current Amp					
G	Secondary resistance (Ω)					
6.12	For stand by earth fault protection					
A	CT ratio					
B	Class of accuracy					
C	Rated burden VA					
D	Knee point voltage V					
E	Excitation current at V_K / 4					
F	Rated saturating current Amp					
G	Over current rating continuous % over load (%)					
6.13	For sensitive by earth fault protection (CBCT)					
A	CT ratio					
B	Class of accuracy					
C	Rated burden VA					
D	Knee point voltage V					
E	Excitation current at V_K / 4					
F	Rated saturating current Amp					
G	Over current rating continuous % over load (%)					
7	**Potential Transformer**					
7.1	Make					
7.2	Types & Voltage Level					
7.3	Reference standard					

7.4	Voltage ratio					
7.5	Accuracy					
A	Corer-1					
B	Corer-2					
7.6	Rated burden					
A	Corer-1					
B	Corer-2					
7.7	Over voltage factor					
A	Continuous					
B	30 Seconds					
7.8	Class of insulation					
7.9	Temperature rise over ambient (^{0}C)					
7.10	Basic impulse level (KV peak)					
7.11	Winding connection					
A	Primary					
B	Secondary					
7.12	Fuses					
A	Continuous rating HV / LV (Amp)					
B	Symmetrical fault rating HV /LV KA rms					
C	Make					
7.13	Maximum ratio error at					
A	90% to 100% of rated voltage and 25% to 100% of rated secondary burden at unity power factor					
B	90% to 106% of rated voltage and 10% to 50% of rated secondary burden at 0.2 p.f.					
7.14	Maximum Phase difference at					
A	90% to 106% of rated voltage and 10% to 50% of rated secondary burden at 0.2 p.f.					
B	90% to 106% of rated voltage and 10% to 50% of rated secondary burden at 0.2 p.f.					
7.15	E=Weight (Kg)					
8	**Relay**					
8.1	Manufacture					
8.2	Model Type					

8.3	Draw out type with built in test facilities. Yes/ No					
8.4	Built in test facility Yes /No					
8.5	Type of mounting					
8.6	Reference standard					
8.7	All relays furnished as per drawing and specification					
8.8	All relevant relay leaflets and catalogue furnished					
8.9	Communication port type					
8.10	Auxiliary Supply					
8.11	Measurement and data acquisition feature					
8.12	Control and supervision					
A	IEC protocol					
B	Open protocol feature					
C	Programming facility					
D	Separate output for individual element					
E	Event recording facility number of events					
F	Required software offered					
8.13	C.T.secondary current					
8.14	Self diagnostic feature					
8.15	Modular design					
8.16	Relay details					
8.16.1	Over current					
A	Make					
B	Type					
C	Characteristic available					
D	Range of setting i. Current ii. Time					
E	Range of setting i. Current ii. Time					
F	Rated burden					
8.16.2	Synchronizing check relay					
A	Make					
B	Type					
C	Setting range					
8.16.3	Earth fault					
A	Make					
B	Type					
C	Characteristic available					

D	Range of setting i. Current ii. Time					
E	Rated burden					
8.16.4	Over current (Directional)					
A	Make					
B	Type					
C	Characteristic available					
D	Range of setting i. Current ii. Time					
E	Rated burden					
8.16.5	Earth fault (Directional) if applicable					
A	Make					
B	Type					
C	Characteristic available					
D	Range of setting i. Current ii. Time					
E	Rated burden					
8.16.6	Neutral unbalance relay					
A	Make					
B	Type					
C	Characteristic available					
D	Range of setting i. Current ii. Time					
E	Rated burden					
8.16.7	Under voltage relay					
A	Make					
B	Type					
C	Range of setting i. Current ii. Time					
D	Rated burden					
8.16.8	Over voltage relay					
A	Make					
B	Type					
C	Range of setting i. Current ii. Time					
D	Rated burden					
8.16.9	Busbar differential relay					
A	Make					

B	Type					
C	High impedance / low impedance					
D	Facility of CT radio adjustment possible through software. Yes / No					
E	CT supervision facility available. Yes /No					
8.16.10	Transformer differential relay					
A	Make					
B	Type					
C	High impedance / low impedance					
D	Facility of CT radio adjustment possible through software. Yes / No					
E	Facility of transformer vector group adjustment possible through software. Yes/ No					
F	Setting range					
G	Rated burden					
8.16.11	Restricted earth fault relay					
A	Make					
B	Type					
C	Combined with differential relay. Yes / No					
D	Setting range					
E	Rated burden					
8.16.12	Stand by earth fault relay					
A	Make					
B	Type					
C	Characteristics					
D	Setting range					
E	Rated burden					
9	**Meters**					
9.1	ammeter					
A	Make					
B	Type					
C	Reference standard					
D	Size					
E	Scale					
F	Accuracy class					
9.2	Voltmeter					
A	Make					

B	Type					
C	Reference standard					
D	Size					
E	Scale					
F	Accuracy class					
9.3	Energy Meter					
A	Make					
B	Type					
C	Reference standard					
D	Size					
E	Scale					
F	Accuracy class					
G	Measurement					
H	kWh					
I	kVARh					
J	kVAH					
K	Any Other					
L	Data stored capability					
M	Pulse output facility					
N	Data down loading facility					
10	**Secondary Wiring**					
10.1	Type of insulation					
10.2	Voltage grade					
10.3	Conductor material					
10.4	Conductor Size (minimum) and insulation wiring					
A	Potential circuit					
B	Control & current circuit					
11	**Terminal Block**					
11.1	Make					
11.2	Type					
11.3	Catalog No.					
11.4	20% spare terminal furnished					
12	**Cable Termination**					
12.1	Clearance for power cable termination					
12.2	Removable gland plate					
A	Material for multicore cable					
B	Material for single core cable					
C	Thickness of plate					
13	**Name Plate**					
13.1	Material					

13.2	Thickness					
13.3	Size for					
A	Breaker cubicle					
B	Instrument / devices					
14	**Space heater / plug socket**					
14.1	Cubicle heater					
A	Thermostat controlled					
B	Wattage					
C	Voltage					
D	Resistance (ohms)					
E	Thermostat range					
14.2	Plug Socket					
A	Type					
B	Rating					
14.3	Cubical heater & plug socket circuit provided with MCB's					
15	**A.C. /D.C. Supply**					
15.1	Isolated switches for incoming supply					
A	A.C. Type & rating					
B	D.C. Type & rating					
15.2	Isolated switches at each cubicle					
A	A.C. Supply type & rating					
B	D.C. Supply type & rating					
16	**Tropical Protection**					
16.1	Any Special treatment for tropical protection					
17	**Painting**					
17.1	Finish of switchgear					
A	Inside					
B	Outside					
18	**No. of Accessories furnished**					
A	Breaker lifting & handling trolley					
B	Any other					
19	**Tests**					
19.1	Reference standard					
19.2	Routine test to be performed on switchgear					
19.3	Type test certificates submitted					
20	**Drawing / Data**					

Schedules & Annexure **Schedule C1**

20.1	General arrangement for panel board					
20.2	Foundation Panel					
20.3	Bill of material					
20.4	Cross sectional drawing for every type of switchgear (Add sheets if necessary)					

Bidders Name : _____

Signature : _____

Name : _____

Designation : _____

Seal of Company Date : _____

SCHEDULE – C2

66 kV CONTROL & RELAY PANEL

	Parameter	Technical Particulars	
1.00.00	**CONTROL PANEL BOARD**		
1.01.00	Make		
1.02.00	Type		
1.03.00	Reference Standard		
1.04.00	Construction		
1.04.01	Degree of protection		
1.04.02	Sheet metal thickness mm		
1.04.03	Floor channel sills, vibration damping pads and kick plate furnished?		
1.05.00	Equipment Mounting		
1.05.01	All relays, meters and switches are flush mounted?		
1.05.02	Relays furnished in draw out cases with built in test facilitate?		
1.06.00	Name plate		
1.06.01	Material		
1.06.02	Thickness		
1.06.03	Size for:-		
	Equipment		
	Panels		
1.07.00	Mimic		
1.07.01	Material		
1.07.02	Width		
1.08.00	Internal Illumination		
1.08.01	Volt		
1.08.02	Watt		
1.08.03	Door switched controlled		
1.09.00	Space Heater		
1.09.01	Volt		
1.09.02	Watt		
1.09.03	Thermostat Controlled?		
1.10.00	Plug Socket		
1.10.01	Type		
1.10.02	Rating		
1.11.00	Panel Illumination, space heater & plug socket circuits provided with individual switch fuse units?		
1.12.00	AC/DC Supply - Type & rating of isolating switch fuse units for		
1.12.01	Incoming AC Supply		
1.12.02	Incoming DC Supply		
1.13.00	Internal Wiring		
1.13.01	Wire Type		
1.13.02	Voltage Grade		

1.13.03	Conductor Material		
1.13.04	Conductor Size for		
	i) Current / control circuit		
	ii) Voltage Circuit		
1.13.05	Wires identified at both ends with ferrules?		
1.14.00	Terminal block		
1.14.01	Make		
1.14.02	Type / Catalogue No		
1.14.03	20% spare terminals furnished?		
1.15.00	Ground Bus		
1.15.01	Materials		
1.15.02	Size (mm)		
1.16.00	Painting		
1.16.01	Type of finish		
1.16.02	Colour Shade - Inside/Outside		
1.16.03	Details of Painting procedure finished?		
2.00.00	**BREAKER CONTROL SWITCH**		
2.01.00	Make		
2.02.00	Type		
2.03.00	Reference Standard		
2.04.00	Contact Rating	220V DC	240V AC
2.04.01	Make & Continuous (A)		
2.04.02	Break (inductive) (A)		
3.00.00	**ISOLATING CONTROL SWITCH**		
3.01.00	Make		
3.02.00	Type		
3.03.00	Reference Standard		
3.04.00	Contact Rating	220V DC	240V AC
3.04.01	Make & Continuous (A)		
3.04.02	Break (inductive) (A)		
4.00.00	**METER SELECTOR SWITCH**		
4.01.00	Make		
4.02.00	Type		
4.03.00	Reference Standard		
4.04.00	Contact Rating	220V DC	240V AC
4.04.01	Make & Continuous (A)		
4.04.02	Break (inductive) (A)		
5.00.00	**PUSH BUTTON**		
5.01.00	Make		
5.02.00	Type		
5.03.00	Reference Standard		
5.04.00	Contact Rating		
5.04.01	Make & Continuous (A)		
5.04.02	Break (inductive) (A)		
5.05.00	NO & type of Contacts provided per button		
6.00.00	**LAMPS**		
6.01.00	Make		
6.02.00	Type		
6.03.00	Reference Standard		
6.04.00	Rating:		

6.04.01	Volt		
6.04.02	Watt		
6.04.03	Series Resistance		
6.05.00	10 % Extra lamps furnished?		
6.06.00	Size of lens		
7.00.00	**SEMAPHORE INDICATORS**		
7.01.00	Make		
7.02.00	Type		
7.03.00	Diameter of the Disc		
7.04.00	Operating voltage		
7.05.00	Burden (Watt DC)		
7.06.00	Whether latch in type or supply Failure type		
8.00.00	**INDICATING INSTRUMENT**	**Ammeter**	**Voltmeter**
8.01.00	Make		
8.02.00	Type		
8.03.00	Reference Standard		
8.04.00	Type of Movement		
8.05.00	Accuracy Class		
8.06.00	Scale in Degrees		
8.07.00	VA Burden		
9.00.00	**MULTIFUNCTION METER**		
9.01.00	Make		
9.02.00	Type		
9.03.00	Reference Standard		
9.04.00	Furnished in Draw out Case or not		
9.05.00	Type of Register		
9.06.00	Accuracy Class		
9.07.00	VA Burden		
9.07.01	Current Coil		
9.07.02	Voltage Coil		
10.00.00	**ANNUNCIATOR**		
10.01.00	Make		
10.02.00	Type		
10..03.00	Reference Standard		
10.04.00	No. of Annunciator groups furnished?		
10.05.00	No. of Windows per group		
10.06.00	Overall Dimension of a group (mm)		
10.07.00	Detailed Write-up on Scheme furnished?		
11.00.00	**TRANCDUCERS**		
11.01.00	Whether provided as per specification		
11.02.00	Make		
11.03.00	Type		
11.04.00	Output		
11.05.00	Accuracy		
11.06.00	Response Time		
11.07.00	Power Supply		
11.08.00	Isolation		
11.09.00	Catalogue furnished		

Schedules & Annexure **Schedule C2**

12.00.00	RELAYS	Make	Type
12.01.00	Relays furnished in draw out cases with built in test facilitates?		
12.02.00	Line Protection Panel		
12.03.00	Transformer Panel		
12.04.00	Bus coupler Panel		
12.05.00	Miscellaneous Auxiliary Relays		
12.06.00	Auxiliary Relay, Voltage Operated with		
	4 pair of contacts		
	8 pair of contacts		
12.07.00	Auxiliary Relay, Current Operated with		
	4 pair of contacts		
12.08.00	Catalogue of all relays submitted with bid		

Bidders Name : _____

Signature : _____

Name : _____

Designation : _____

Seal of Company Date : _____

SCHEDULE – C3

BATTERY CHARGER

Sr. No.	Description	Data to be filled by manufacturer
1	Manufacturer equipment type	
2	Conformance to design standards as per specification Yes / No	
3	Conformance to design features as per specification Yes / No	
4	Submitted to deviation sheet for each specification clause no - Yes / No	
5	Panel dimension in mm (length x depth x height)	
6	Panel weight in kg	
7	Panel enclosure protection offered	
8	Voltage regulation as per specification (value to be specified)	
9	Boost charging DC current adjustment range (Value to be specified)	
10	Amount of Ripple in DC in % - output with battery - without battery	
11	Charger efficiency offered	
12	Max temperature rise above ambient	
13	Power factor at rated load	
14	Rectifier bridge as per specification	
15	Heat generated by the panel in Kw	
16	AC MCCB - Make , rating	
17	DC MCCB - Make , rating	
18	Rectifier transformer - Make , rating	
19	Semiconductor rectifier - Make , rating	
20	DC conductor - Make , rating	
21.1	DCDB integral part of charger or separate?	
21.2	MCB for DC distribution boards - Make, rating	
22	Conformance to metering & indication as per specification	
23	Conformance to make of component as per specification	
24	Conformance to mimic diagram, labels & finish as per specification	
25	Submission of component catalogue - Yes / No	
26	DC charger nominal output current - (battery trickle charge + DC load)	
27	DC charger boost charge current	

28	DC battery	
29	DC battery duty cycle	

Bidders Name : _____

Signature : _____

Name : _____

Designation : _____

Seal of Company Date : _____

Annexure C Guaranteed Technical Particulars (Data by Supplier)

Sr. No.	Description	Data to be filled by Manufacturer
1	Battery (as per scope of supply annexure A) – Yes/No	
2	Manufacturer battery type	
3	Conformance to design standards as per specification clause no 2.0 – Yes/No	
4	Conformance to design features as per specification clause no 3.0 & 4.0 – Yes/No	
5	Submission of deviation sheet for each specification clause no – Yes/No	
6.1	Battery GA drawing submitted – Yes/No	
6.2	Battery selection / sizing calculation submitted – Yes/No	
7	Battery rating (C5) offered in Ahr	
7.1	Rating at temperature 27 deg C as per IS	
7.2	Rating at temperature 20 deg C as per IEC	
8.1	Battery rack type offered - steel or FRP	
8.2	Number of steps in a tier	
8.3	Number of tier in rack	
9	Battery bank dimensions in mm (length x depth x height)	
10	Battery cell weight in kg	
11	Battery cell anode - no. of plates & thickness in mm	
12	Battery cell cathode - no of plates & thickness in mm	
13.1	Battery cell nominal voltage	
13.2	Battery cell float charge voltage	
14	Battery cell maximum boost charge voltage	
15	Battery cell end cell voltage	

16	Total battery bank float charging voltage required in volts	
17.1	Total battery bank boost charging voltage required in volts	
17.2	Total time required for boost charging from end cell voltage to rated voltage / capacity	
18	Battery internal resistance (in Ohms) at fully charged condition	
19	Heat generated by battery at rated full load (in Kw)	
20	Electrolyte chemical name	
21	Electrolyte specific gravity at 27 deg C	
22	Recommended topping up frequency (in weeks or months)	
23	Amount of gas evolution in one full charge discharge cycle (in litre / Ahr)	
24	Type of separators used in battery cell	
25	Shelf life period (to retain 90% of energy from full charge condition at 27 deg C)	
26	Total battery bank short circuit fault level (in KA)	
27	Battery bank terminal bus bar with insulating shrouds – Yes/no	

SCHEDULE – C6

11kV AUTO-SWITCHED CAPACITOR BANK

S.No.	Description	
1	Manufacturer equipment type/make	
2	Conformance to design standards as per	
	specification Yes/No	
	- Capacitor Unit	
	- Series Reactor	
	- LA	
	- Isolator	
	- NCT	
3	Conformance to capacitor design requirements as per specification clause no.3.0 to 7.0 - Yes/No	
4	Submission of deviation sheet for each specification clause no. -Yes/No	
5	APP type capacitors offered?	
6	Capacitor bank arrangement / scheme conforming to specification?	
7	Capacitor bank (3 phase system)	
7.1	Capacitor bank (Rated capacitance at 50Hz)	
7.2	Capacitor bank rated voltage – 12Kv	
7.3	Capacitor bank KVAR at 11kV	
7.4	Capacitor bank KVAR at 12kV	
7.5	Capacitor bank line current at rated voltage, continuous operation	
7.6	Designed short circuit withstand capacity for 3sec	
7.7.1	Capacitor bank insulation level at 50Hz	

7.7.2	Capacitor bank impulse voltage withstand	
7.8	One spare single phase capacitor unit offered?	
8	**Capacitor single phase unit**	
8.1	Capacitor single unit capacitance at 50Hz	
8.2	Capacitor single unit rated operating voltage	
8.3	Capacitor KVAR (at rated voltage)	
8.4	Capacitor single unit continuous operating rated current	
8.5	Designed short circuit withstand capacity of single capacitor unit for 3sec	
8.6	Capacitor unit temperature category (required +5/ C)	
9	**Single capacitor unit construction**	
9.1	Enclosure sheet metal CRCA	
9.2	Enclosure sheet metal thickness in mm	
9.3	Hermetic sealing method (pressure welding/gas welding/sealant/ if any other pl. specify)	
9.4	Dimensions of a single capacitor unit	
	Height	
	Length	
	Width	
9.5	Weight of a single capacitor unit	
9.6	Single capacitor unit bushings	
	Type of insulator	
	Creepage distance	
	Clearance between two terminals	
9.7	No. of series group/unit	
9.8	No. of parallel elements/ series group	
9.9	No. of APP layers -double/triple	

9.10	Thickness of APP film	
9.11	Width of APP film	
9.12	Thickness of Al foil	
9.13	Width of Al foil	
9.14	Active width of Al foil	
9.15	Maximum voltage stress per APP layer	
9.16	Element connection method	
9.17	Discharge device	
10	Capacitor bank maximum permissible over voltage	
11	Capacitor power loss at rated voltage	
12	Capacitor tan delta (Tangent of power loss angle) at maximum operating conditions	
13	Guaranteed temperature rise of capacitor above ambient temperature	
14.1	Type of discharge device – internal resistor	
14.2	Discharge device material	
14.3	Value of discharge device	
14.4	Discharge time required to attain residual voltage equal to 50 volts	
15	Capacitor bank overall dimensions	
	Height x Length x Width	
16	Capacitor bank total weight	
17	Capacitor bank clearances	
	i)Phase to Phase	
	ii)Phase to neutral	
	iii)Phase to earth	
18	Tinned copper Bus bar cross-section in sq. mm	

19	Tinned copper Bus bar continuous rating	
20	Bus bar short time withstand capacity in kA for 3sec	
21	Flexible tinned copper connector rating	
22.1	Bus bar support insulator make & type	
22.2	Bus bar support insulator voltage class	
23	Bus bar provided with insulating sleeve and phase barriers?	
24	**Neutral Current transformer**	
24.1	Neutral current transformer make	
24.2	Neutral current transformer outdoor type	
24.3	Cast resin type NCT offered?	
24.4	Neutral current transformer ratio	
24.5	Neutral current transformer accuracy class (0.5 & 5P10min)	
24.6	Neutral current transformer rating(10 & 15VA)	
24.7	Neutral current transformer terminal box ingress protection (IP55min)	
24.8	**Residual Voltage Transformer**	
25	**Series Reactor**	
25.1	Series reactor make	
25.2	Continuous current rating of series reactor	
25.3	Series reactor kVAr rating per phase per star	
25.4	Series reactor rated voltage	
25.5	Type –dry air cooled	
25.6	Short time withstand current capacity for 3sec (min 16 times capacitor rated current at 130% rated voltage)	
25.7	Series reactor single phase unit connected between single phase capacitor units and neural star pint	

25.8	Series reactor power frequency withstand voltage 28Kv MIN	
25.9	Series reactor lightening impulse withstand voltage 75kv min	
26	**Lightning Arrestor**	
26.1	Name of manufacturer	
26.2	Type – Gapless ZnO	
26.3	Rated voltage	
26.4	Nominal Discharge Current	
26.5	Class - III	
26.6	Insulation withstand voltage	
26.7	Crrepage distance	
27	**Vacuum Contactor / switch for Auto Switching**	
27.1	Rated Voltages	
27.2	Rated Continuous Current	
27.3	Rated Capacitor Switching Current	
27.4	Frequency	
27.5	Control supply	
27.6	Type	
27.8	Installation	
27.9	Mechanical Endurance	
27.10	Electrical Endurance	
27.11	Mechanical Indicator	
27.12	Trip lever	
27.13	Closing lever	
28	**Isolator**	

28.1	Name of manufacturer	
28.2	Isolator ratings	
28.3	Type of operation	
28.4	Type	
28.5	Operating mechanism	
28.6	Voltage rating	
28.7	Rated current	
28.8	No.of poles	
28.9	Rated short time current	
28.10	Type of mounting	
28.11	Construction	
28.12	Earth switch provided	
28.13	Auxiliary contacts provided	
28.14	Electrical interlocks	
28.15	Mechanical interlocks	
28.16	Creepage distance	
28.17	Insulation level - Power frequency hstand Voltage - Impulse withstand voltage	
28.18		
	Terminal arrangement a) Incoming suitable for b) Outgoing suitable for	
28.19	Overload capacity	
28.20	Control voltage	
29	Name plate and labels as per specification?	

30	Painting of capacitor and mesh enclosure	
30.1	Shade RAL 7032	
30.2	Material – Pure polyester grade A	
30.3	Minimum thickness (80 microns)	
31	Power cable terminal suitable for 3CX300Sqmm XLPE HT	
32	Space provided for future capacity	

Bidders Name : _____
Signature : _____
Name : _____
Designation : _____
Seal of Company Date : _____

SCHEDULE – C7

LT POWER CABLES

For each size / rating separate GTP need to be furnished.			
S.No.	**Description**	**Buyer's requirement**	**Seller's Data**
1	Make	……	
2	Type (AS PER IS)	A2XFY (Multicore)	
3	Voltage Grade (KV)	1.1	
4	Maximum conductor temperature		
A	Continuous (^{0} C)	90 ^{0}C	
B	Short time (^{0} C)	250 ^{0}C	
5	Conductor		
A	Size (mm^2)	4CX300,4CX50, 4CX25, 4CX10 & 2CX10 Sqmm	
B	No. of wire in each conductors Nos.	As per Manufacturer standard	
C	Dia of wires in each conductors before compaction (mm)	As per Manufacturer standard	
D	Shape of conductor	As per specification	
E	Diameter over conductor (mm)	……	
F	Maximum conductor resistance at 20^0 C (ohm / km)	As per table 2 of IS -7098 Part -1	
6	Insulation		
A	Nominal thickness (mm)	As per table 3 of IS -7098 Part -1	
B	Minimum thickness (mm)	……	
C	Diameter over insulation (mm) Approx	……	
7	Inner Sheath		
A	Minimum thickness	As per table 5 of IS -7098 Part -1	
B	Approx dia over sheath (mm) Approx	……	
8	Galvanized steel Armour	As per table 6 of IS -7098 Part -1	
A	Number of strips	As per manufacturer Std.	
B	Size (Thickness X width) in mm	0.8 x 4	
C	Dia of wire for 2CX10sqmm	1.4mm Min	
D	Dia over Armour -Approx	……	
9	Outer Sheath	As per table 8 of IS -7098 Part -1	
A	Thickness (Minimum)		
B	Colour	Yellow	
C	Weather proof paint (applicable for 2c x 10 sqmm and 4c x 10 sqmm only)	……	
10	Approx. overall dia (mm)	……	
11	End Cap	Required	
12	Continuous current rating for standard I.S. condition laid Direct		

	a. In ground 30 ^{0}C Amps	……	
	a. In duct 30 ^{0}C Amps	……	
	a. In air 40 ^{0}C Amps	……	
13	Short circuit current for 1 sec of conductor (KAmp)	……	
14	Electrical Parameters at Maximum operating temperature		
A	Resistance (Ohm / Km) (AC Resistance)	……	
B	Resistance AT 50 C/s (Ohm / Km)	……	
C	Impedance (Ohm / Km)	……	
D	Capacitance (Micro farad /Km)	……	
15	Recommended minimum bending radius	…….. X O/D	
16	De-rating factor for following Ambient Temperature in	Ground /Air	
	a. At 30 ^{O}C		
	a. At 35 ^{O}C		
	a. At 40 ^{O}C		
	a. At 45 ^{O}C		
	a. At 50 ^{O}C		
17	Group factor for following Nos. of cables laid	Touching Trefoil	
A	3 Nos.		
B	4 Nos.		
C	5 Nos.		
D	6 Nos.		
18	Process of cross linking of polyethylene	Dry cure	

Bidders Name : _____

Signature : _____

Name : _____

Designation : _____

Seal of Company

Date : _____

SCHEDULE – C8

CONTROL CABLES

Sr.	Description	Buyer's requirement	Seller's Data
	Purchase Req. No.	….	
	Guarantee Period: 5 Years	60/66 Months	
1.0	Make	….	
2.0	Type (AS PER IS 1554 part -1)	YWY	
3.0	Voltage Grade (KV)	1.1	
4.0	Maximum Conductor temperature		
A	Continuous (° C)	70°C	
B	Short time (° C)	160°C	
5.0	Conductor		
A	Size (mm2)	2.5 / 4 sq mm	
B	No. of wires in each conductor Nos.	As per Manufacturer standard	
C	Dia. of wires in each conductor before compaction (mm)	As per Manufacturer standard	
D	Shape of Conductor	As per Cl.2.1.1 of specification	
E	Diameter over conductor mm	….	
F	Maximum Conductor resistance at 20 ° C (Ohm/Km)	As per Table 2 of IS 8130	
6.0	Insulation	As per Table 1 of IS:5831 – 1984	
A	Nominal thickness (mm)	As per Cl.2.1.2 of specification & Table 2 of IS 1554(Part-1)	
B	Minimum thickness (mm)		
C	Core Identification	Color of all the cores shall be different	
D	Diameter over Insulation (mm) Approx.	….	

7.0	Inner Sheath	As per Table 2 of IS:5831 – 1984	
A	Minimum thickness (mm)	As per Table 4 of IS 1554(Part-1)	
B	Approx. dia. Over sheath (mm)- Apprx.	….	
8.0	Galvanized Steel Armour	As per Cl 2.1.5 of specification	
A	Number of armour wire	As per Manufacturer Std.	
B	nal Dia of Round Wire	As per Table 5 of IS 1554(Part-1)	
C	Dia. over Armour – Approx.	….	
D	Lay Ratio	….	
E	Confirm minimum 90% coverage (submit calculation)		
9.0	Outer Sheath (FRLS)	As per Table 2 of IS:5831 – 1984	
A	Thickness (Minimum)	As per Table 7 of IS 1554(Part-1)	
B	Color	Black	
10.0	Approx. overall dia. (mm)	….	
11.0	Drum Length & tolerance	As per Spec.Cl. 6.0.0	
12.0	End Cap	Required	
13.0	Drums provide with MS Spindle plate & Nut bolts arrangement	Required	
14.0	Net Weight of cable (Kg/Km.) – Approx.	….	

15.0	Continuous current rating for standard I.S. condition laid Direct		
	a) In ground 30° C Amps	….	
	b) In duct 30° C Amps	….	
	c) In Air 40° C Amps	….	
16.0	Short circuit current for 1 sec of conductor. (KAmp)	….	
17.0	Electrical Parameters at Maximum Operating temperature:		
A	Resistance (Ohm/Km) (AC Resistance)	….	
B	Reactance at 50 C/s (Ohm/Km)	….	
C	Impedance (Ohm/Km)	….	
D	Capacitance (Micro farad / KM)	….	
18.0	Recommended minimum bending radius	…. x O/D	
19.0	FRLS Properties		
	i) Oxygen Index		
	ii) Temperature Index		
	iii) Max Acid Gas Generation		
	iv) Light Transmission / Smoke Density		

Bidders Name : _____

Signature : _____

Name : _____

Designation : _____

Seal of Company Date : _____

SCHEDULE – C9

ILLUMINATION SYSTEM

1	**General**			
+1.01	Make			
*1.02	Applicable Standards			
*1.03	Degree of protection			
2	**Lighting Panel /Feeder Pillarm Box (LP/ELP/DLP/FPB/EPB/LDB/ELDB/ Construction Features)**			
2.01	Make			
2.02	Rated Value (V)			
*2.03	Busbar continuous current rating (A)			
*2.04	Busbar material and cross section	1	2	3
3	**Minimum current breakers :**			
+3.01	Service			
3.02	Make			
+3.03	Type			
*3.04	No. of poles			
*3.05	Rated continuous current (A)			
*3.06	Short time current rating (Ka)			
*3.07	Related Voltage (V)			
*3.08	Breaking Current (Ka)			
4	**Load Breaking Switches**			
4.01	Service			
+4.02	Make			
+4.03	Type			
*4.04	No. of poles			
*4.05	Related Voltage (V)			
*4.06	Rated continuous current (A)			
*4.07	Rated making current (Ka peak)			
*4.08	Rated breaking current (Ka)			
*4.09	Rated short time one (1) second current (Ka)			
*4.10	Rated dynamic current (kApeak)			
5	**Fuses**			
5.01	Service			
+5.02	Make			
*5.03	Type			
*5.04	Standard applicable			
*5.05	Related Voltage (V)			
*5.06	Rated current (A)			
*5.07	Fusing factor			

*5.08	Category of duty			
*5.09	Rupturing capacity (prospective current) (Ka)			
6	**Earth Leakage current Breaker**			
+6.01	Make			
+6.02	Type			
*6.03	No. of poles			
*6.04	Rated continuous current (A)			
6.05	Short time current rating (Ka)			
6.06	Rated Tripping current			
7	**Lighting Fixtures**	Type A	B	C
+7.01	Manufacturer			
+7.02	Type			
7.03	Description of different types			
*7.04	Type and wattage of lamp			
*7.05	Rated life of the lamp			
*7.06	Applicable standards			
	Note:- In case luminaries other than the ones specified in specification are offered, all the deviations shall be listed out otherwise these shall be considered as being fully in line with luminaries specified.			
8	**Receptacles with Switches**	1	2	3
+8.01	Make			
+8.02	Type			
+8.03	Related Voltage (V)			
*8.04	Rated current (A)			
8.05	Technical brochures (Attach brochures and state brochure Nos.)			
9	**Cables / Wire**	1	2	3
9.01	Service			
+9.02	Make			
+9.03	Type			
*9.04	Voltage Grade (V)			
*9.05	Conductor Material			
*9.06	Size of conductors (mm^2)			
*9.07	Current rating of conductors (A)			
9.08	Applicable Standards			
10	**Conduits and Accessories**			
10.01	Make			
10.02	Type			
10.03	Material			
10.04	Applicable Standards			
11	**Lamp and Luminaries**	Incandescent Lamps	Fluorescent Tubes	HPSV Lamps
11.01	Make			

11.02	Type			
*11.03	Lumen output throughout life (Lumen)			
*11.04	Derating factor due to temperature			
*11.05	Derating factor due to aging			
12	**Lighting Poles / Towers**			
12.01	Manufacturer			
12.02	Applicable Standards			
12.03	Material and Painting			
12.04	Height			

Notes :

1. Single asterisk (*) marked particulars are guaranteed.
2. Other particulars are bonafide and may vary slightly upon completion of detailed design.
3. Particulars against items marked * and + shall be furnished with the Bid.

Bidders Name : _____

Signature : _____

Name : _____

Designation : _____

Seal of Company Date : _____

SCHEDULE – C10

AC DISTRIBUTION BOARDS

S.No	Description	Buyers Requirement	Sellers Data
1	**Panel Construction**		
1.1	Enclosure Type	Free standing, indoor, Fully compartmentalized, Metal clad, Vermin Proof	
1.2	Enclosure degree of protection	IP 5X	
1.3	Enclosure Material	CRCA steel	
1.4	Load bearing members	Minimum 2.5 mm thick	
1.5	Doors and covers	Minimum 2.0 mm thick	
1.6	Gland Plate (detachable type)	3.0mm MS detachable type or Aluminum 5.0mm for single core cables	
1.7	Separate compartment for	Bus bar, circuit breaker, incoming cable, outgoing cable PT, LV instruments.	
1.8	Breaker compartment door	Separate with lockable handle	
1.9	Fixing arrangement i. Doors ii. Covers iii. Gasket	 Concealed hinged Bolted with SS bolts Neoprene	
1.10	Panel Base Frame	Steel base frame as per manufacturer's standard.	
1.11	Handle	Removable bolted covers for cable chamber and busbar chamber shall be provided with "C" type handles	
1.12	Space Heater	Required	
1.13	Panel extension possibility	Required	
2	**MCCB**		
2.1	Mounting	Flush Mounted	
2.2	Rated Operational Voltage(V)	415 volt	
2.3	Ultimate breaking Capacity		
2.3.1	630A MCCB	As per requirement	
2.3.2	100A MCCB	As per requirement	
2.4	Rated Service breaking capacity at rated voltage Ics	Ics =100% Icu	
2.5	Rotary handle	Required	
2.6	Interlocking arrangement	Between Incomer MCCBs	
2.7	Trip time	As per requirement	
2.8	Test Certificates	Should have test certificates for breaking capacities from independent test authorities	

		CPRI / ERDA or equivalent	
3	**MCB**		
3.1	Rated Operational Voltage(V)	415 VAC 50 Hz	
3.2	Protection relay/Release	Magnetic thermal release for over current and short circuit protection	
3.3	Breaking capacity	Shall not be less than 10 KA at 415 VAC	
3.4	Mounting	Din mounted	
3.5	MCB classification	As required	
3.6	ISI Marked	The complete range shall be ISI marked	

Bidders Name : _____

Signature : _____

Name : _____

Designation : _____

Seal of Company Date : _____

SCHEDULE – C11

STATION AUXILIARY TRANSFORMER

Sr.	Particulars	Specified / Required	Offered
1.0	General		
1.1	Make		
1.2	Type	Oil immersed, core type, step down located generally outdoor but may be located indoor also with poor ventilation. Bidder shall confirm full rating available in indoor location also	
2.0	Nominal Continuous Rating, KVA		
2.1	HV winding	400kVA	
2.2	LV winding	400kVA	
3.0	Rated voltage (kV)		
3.1	HV Winding	11 kv	
3.2	LV Winding	433 volt	
4.0	Rated current (Amps)		
4.1	HV Winding		
4.2	LV Winding		
5.0	Connections		
5.1	HV Winding	Delta	
5.2	LV Winding	Star with neutral	
5.3	Vector Group reference	Dyn11	
6.0	Impedance at principal tap rated current and frequency, ohm @75 deg C		
6.1	Impedance	5.0 % with IS tolerance	

6.2	Reactance		
6.3	Resistance		
6.4	Impedance at lowest tap at rated current and frequency		
6.5	Impedance at highest tap at rated current and frequency		
7.0	Resistance of the winding at 75^0 C in ohm		
7.1	a) HV		
7.2	b) LV		
8.0	Zero sequence impedance in ohm		
8.1	a) HV		
8.2	b) LV		
9.0	Guaranteed maximum losses at principal tap full load and 75°C without any positive tolerance, kW		
9.1	No load losses (max.)	0.7	
9.2	Load losses (max.)	5.1	
9.4	Total I^2R losses of windings @ 75 deg C, KW		
9.5	Total stray loses @ 75 deg C, KW		
9.6	Total losses (max.), KW	5.8	
9.7	No load loss at maximum permissible voltage and frequency (approx.),kW		
10.0	Temperature rise over reference ambient of 50 ^{0}C		
10.1	Top oil by thermometer ^{0} C	40 ^{0}C	
10.2	Winding by resistance ^{0} C	45 ^{0}C	

11.0	Efficiency		
11.1	Efficiency at 75^0C and unity power factor %		
11.1.1	at 110% load		
11.1.2	at 100% load		
11.1.3	at 80% load		
11.1.4	at 60% load		
11.1.5	at 40% load		
11.1.6	at 20% load		
11.2	Efficiency at 75^0C and 0.8 power factor lag %		
11.2.1	at 110% load		
11.2.2	at 100% load		
11.2.3	at 80% load		
11.2.4	at 60% load		
11.2.5	at 40% load		
11.2.6	at 20% load		
11.3	Maximum efficiency at 75^0C %		
11.4	Load and power factor at which it occurs		
12.0	Regulation , (%)		
12.1	Regulation at full load at 75^0 C		
12.1.1	at unity power factor		
12.1.2	at 0.8 power factor lagging		
12.2	Regulation at 110% load at 75^0 C		
12.2.1	at unity power factor		
12.2.2	at 0.8 power factor lagging		
13.0	Tappings		

13.1	Type	Off Circuit taps on HV winding	
13.2	Capacity	Full capacity	
13.3	Range-steps x % variation	+5% to -5% @ 2.5%	
13.4	Taps provided on HV winding (Yes / No)	Yes.	
13.5	Rated current of rotary switch	60 A	
14.0	Cooling system	-	
14.1	Type of cooling	ONAN	
14.2	No. of cooling unit Groups		
14.3	Capacity of cooling units		
14.4	Mounting of radiators		
14.5	Number of Radiators		
14.8	Total radiating surface , sqmm		
14.9	Thickness of radiator tubes, mm	Minimum 1.2 mm	
15.0	Details of Tank		
15.1	Material	Robust mild steel plate without pitting and low carbon content	
15.2	Thickness of sides mm		
15.3	Thickness of bottom mm		
15.4	Thickness of cover mm		
15.5	Confirmation of Tank designed and tested for Vacuum, Pressure (Ref: CBIP Manual) , (Yes/ No)		
15.5.1	Vacuum mm of Hg. / (kN/m^2)	As per CBIP	
15.5.2	Pressure mm of Hg.	Twice the normal head of oil / normal pressure + 35kN/m^2 whichever is lower, As per CBIP	
15.6	Is the tank lid sloped?	Yes	
15.7	Inspection cover provided (Yes / No)	as per clause 4.2.1.5	
15.8	Location of inspection cover (Yes / No)		
15.9	Min. dimensions of inspection cover (		

	provide list of all inspection cover with dimension), mm x mm		
16.0	Core		
16.1	Type:	Core	
16.2	Core material grade	Premium grade minimum M4	
16.3	Core lamination thickness in mm	0.27 Max	
16.4	Insulation of lamination	With insulation coating on both sides	
16.5	Design flux density at rated condition at principal tap, Tesla		
16.6	Maximum flux density at 10 % overexcitation /overfluxing, Tesla	1.9 Tesla	
16.7	Equivalent cross section area mm²		
16.8	Guaranteed No Load current at 100% rated voltage , Amps		
16.8.1	HV		
16.8.2	LV		
16.9	Guaranteed No Load current At 110% rated voltage, Amps		
16.9.1	HV		
16.9.2	LV		
17.0	Type of Winding		
17.1	HV		
17.2	LV		
17.3	Conductor material	Electrolytic Copper	
17.4	Current density (HV/LV)	Maximum allowed 3.0 A per sqmm. At any tap	
17.5	Gauge/area of cross section of conductor		
17.5.1	a) HV		
17.5.1	b) LV		

17.6	Insulating material		
17.6.1	HV Turn		
17.6.2	LV Turn		
17.6.3	LV Core	-	
17.6.4	HV - LV	-	
17.7	Insulating material thickness, mm		
17.7.1	HV Turn		
17.7.2	LV Turn	-	
17.7.3	LV to Core		
17.7.4	HV to LV		
		-	
18.0	Minimum design clearance, mm		
18.1	HV to earth in Air		
18.2	HV to earth in oil		
18.3	LV to earth in Air		
18.4	LV to earth in oil		
18.5	Between HV & LV in Air		
18.6	Between HV & LV in oil		
18.7	Top winding and yoke		
18.8	Bottom winding and yoke		
19.0	Insulating oil		
19.1	Quantity of oil Ltrs		
19.1.1	In the Transformer tank		
19.1.2	In each radiator		
19.1.4	Total quantity		
19.2	10% excess oil furnished?	Yes	
19.3	Type of Oil	As per BSES Spec Annex -C	
20.0	Bushing / Support Insulator		
20.1	Make	-	
20.2	Type		

20.2.1	HV side	As per Cl. 3.2.7.1 of the spec	
20.2.2	LV side	As per Cl. 3.2.7.2 of the spec	
20.3	Reference Standard		
20.4	Voltage class, kV		
20.4.1	HV side Bushing/ Support Insulator	12 kV	
20.4.2	LV side line and neutral bushing/ Support Insulator	1.1 kV	
20.5	Creepage factor for all bushing / Support Insulator mm/KV	31 mm / kV	
20.6	Rated thermal short time current		
20.6.1	HV bushing	25 times rated current for 2 secs.	
20.6.2	LV line and neutral bushing	25 times rated current for 2 secs.	
20.7	Weight, Kg		
20.7.1	HV bushing		
20.7.2	LV line and neutral bushing		
20.8	Free space required for bushing removal, mm		
20.8.1	HV bushing		
20.8.2	LV line and neutral bushing		
21.0	Terminal connections		
21.1	HV	Cable size as per annexure A 22.0	
21.2	LV	Cable size as per annexure A 23.0	
21.3	LV Neutral	Cable size as per annexure A 23.0	
22.0	H.V. Cable box	Required	
22.1	Suitable for cable type , size	As per annexure A cl. 22.0	
22.2	Termination height, mm	750 mm, minimum	
22.3	Gland Plate dimension, mm x mm		
22.4	Gland Plate material	Aluminium	
22.5	Gland Plate Thickness, mm	5 mm minimum	
22.5	Phase to phase clearance inside box, mm	180 mm	
22.6	Phase to earth inside box, mm	120 mm	

22.7	HV Cable Box Protection Class	IP 55	
23.0	L.V Cable termination arrangement	With cable box	
23.1	Suitable for cable type , size	Cable size as per annexure A cl. 23.0	
23.2	Termination height, mm	1000 mm, minimum	
23.3	Gland Plate dimension, mm x mm		
23.4	Gland Plate material	Aluminium	
23.5	Gland Plate Thickness, mm	5 mm minimum	
23.5	Phase to clearance inside box, mm	25 mm minimum	
23.6	Phase to earth inside box, mm	25 mm minimum	
23.7	LV Cable Box Protection Class	IP 55	
24.0	L.V neutral Cable termination arrangement	Separate cable box not required	
25.0	Current Transformer on LV phases		
25.1	Type		
25.2	Make		
25.3	Reference Standard		
25.4	CT Ratio	As per annexure C cl 21.0	
25.5	Burden, VA	As per Cl. 3.2.9.5 of the spec.	
25.6	Class of Accuracy	As per Cl. 3.2.9.4 of the spec.	
25.7	CT terminal box size	As per Cl. 3.2.9.8.1 of the spec.	
26.0	Pressure release device		
26.1	Minimum pressure the device is set to rupture		
26.1.1	For Main Tank		
27.0	Fittings Accessories Each Transformer furnished as per Clause No 5. (Bidder shall attach separate sheet giving details, make and bill of materials)		

28.0	Painting: as per clause for the transformer, cable boxes, radiator, Marshalling box (Yes/No)		
29.0	Over all transformer dimensions		
29.1	Length, mm	1700	
29.2	Breadth, mm	1500	
29.3	Height, mm	1700	
30.0	Transformer Tank Dimensions		
30.1	Length, mm		
30.2	Breadth, mm		
30.3	Height, mm		
31.0	Weight data		
31.1	Core, kG		
31.2	Frame parts, kG		
31.3	Core and frame, kG		
31.4	Total Winding, kG		
31.5	Core , Frame, Winding, kG		
31.6	Tank, kG		
31.7	Tank lid, kG		
31.8	Empty conservator tank, kG		
31.9	Each radiator empty, kG		
31.10	Total weight of all radiators empty, kG		
31.11	Weight of oil in Tank, kG		
31.12	Weight of oil in Conservator, kG		
41.13	Weight of oil in each Radiators, kG		
31.14	Total weight of oil in Radiators, kG		
31.16	Total Transport weight of the transformer, kG		
32.0	Volume Data		

Schedules & Annexure **Schedule C11**

32.1	Volume of oil in main tank, litres		
32.2	Volume of oil between highest and lowest levels of main conservator, litres		
32.4	Volume of oil in each radiator, litres		
32.5	Total volume of oil in radiators, litres		
32.7	Transformer total oil volume, litres		
33.0	Shipping Data		
33.1	Weight of heaviest package, kG		
33.2	Dimensions of the largest package (L x B x H) mm		
34.3	Tests		
34.1	All in process tests confirmed as per Cl. (Yes/ No)		
34.2	All Type Tests confirmed as per Cl. (Yes / No)		
34.3	All Routine Tests confirmed as per Cl. (Yes/ No)		
34.4	All Special Tests confirmed as per Cl. (Yes/ No)		

Bidders Name : _____
Signature : _____
Name : _____
Designation : _____
Date : _____

Seal of Company

SCHEDULE – C12

GROUNDING & LIGHTNING PROTECTION SYSTEM

S.No.	Description	Unit	Data by vendor
1	**Earth mat**		
a	Material		
b	Size of conductor		
c	Fault withstand current & duration		
2	**Equipment Earthing**		
a	Material		
b	Size of conductor		
3	**Earth Electrode**		
a	Material		
b	Size		
c	Length		
4	**Lightning Protection System**		
a	Material and size of horizontal air termination		
b	Material and size of vertical air termination		
c	Material and size of down conductor		
d	Size of test link		
e	Material of enclosure for test link		
f	Material and size of earth electrode		

Bidders Name : _____

Signature : _____

Name : _____

Designation : _____

Seal of Company Date : _____

SCHEDULE – C13

CABLE ACCESSORIES

1	Cable Accessories	
1.01	Makes	
1.02	Termination kits	
1.03	Straight through joint kits	
1.04	Cable glands	
1.05	Cable lugs	
1.06	Termination blocks	
1.07	Types	
1.08	Termination kits	
1.09	Straight through joints	
1.1	Cable glands	
1.11	Cable lugs	
1.12	Terminal blocks	

Bidders Name : _____

Signature : _____

Name : _____

Designation : _____

Seal of Company Date : _____

SCHEDULE – C14

CABLE TRAYS, ACCESSORIES AND TRAY SUPPORT, CONDUITS, PIPES AND DUCTS

1	**General**	
a	Name of the Contractor	
b	Name of sub contractors, if any	
c	Applicable standards	
2	**Cable Trays and Fittings**	
a	Cable Trays and Fittings	
i.	Make	
ii.	Type	
iii.	Material	
	1. Thickness (mm)	
	2. Thickness of galvanization (microns)	
	3. Zinc coating per sq meter (gms)	
3	**Conduits , Fitting and Accessories**	
a	Pipes with fitting	
i.	Make	
ii.	Type	
iii.	Material	
	1. Thickness (mm)	
	2. Thickness of galvanization (microns)	
b	Flexible conduits with fittings and accessories	
i.	Make	
ii.	Type	
iii.	Material	
	1. Thickness (mm)	
	2. Thickness of galvanization (microns)	

Bidders Name : _____

Signature : _____

Name : _____

Designation : _____

Seal of Company Date : _____

SCHEDULE – C15

GAS INSULATED SWITCHGEAR

Proposed Technical data 66 k V Gas insulated switchgear

Sr. No.	Description		Proposed Data
1.0	Manufacturer		
2.0	Country of origin		
3.0	Type designation		
4.0	Indoor or outdoor		
5.0	Applied standard, publication number and year		
6.0	Segregated-phase type or common enclosure type		
7.0	Rate voltage	kV rms	
8.0	Number of phase		
9.0	Rated lightning impulse withstand voltage	kV peak	
9.1	phase to earth		
9.2	phase to phase		
9.3	across open contact		
10.0	Rated 1 min power-frequency withstand voltage	kV rms	
11.0	Auxiliary circuit 50HZ, 1 min withstand voltage		
12.0	Rated frequency	Hz	
13.0	Rated short time withstand current	kA	
14.0	Rated peak withstand current	kA	
15.0	Degree of protection for auxiliary and control circuit		
16.0	Rated supply voltage of closing and opening device	Vdc	
17.0	Permissible ambient temperature	**0C**	

18.0	Maximum temperature rise at.....A		
19.0	Material of enclosure	Al/alloy/steel	
20.0	Average Thickness	mm	
21.0	Guarantee SF6 gas losses per compartment per year	%	
22.0	Design Maintenance period		
23.0	Rated SF6 gas pressure at 20 **0C**		
24.0	Minimum safe gas pressure at 20**0C** required for safe operation		
25.0	Setting of pressure relief device (20 **0C**)		
26.0	Emergency operation at rated voltage and	yes/no	
27.0	No. of Gas Compartment		
27.1	Bus Bar		
27.2	**Feeder**		
28.0	Heat losses per feeder at rated power	KW	
29.0	Bay width	mm	
30.0	Volume of gas contained in each compartment	M3	
31.0	Burn through time of enclosure for internal fault of 31.5KA	Sec	
32.0	Weight per bay (ready for operation)	Sec	
33.0	Heaviest part	Kg	
34.0	Net total weight	Kg	
35.0	Packing detailed drawing number (to be attached)	Kg	
CIRCUIT BREAKER			
1.0	Manufacturer		

2.0	Country of manufacture		
3.0	Type designation, number of pole		
4.0	Indoor or outdoor		
5.0	Applied standard, publication number and year		
6.0	Catalog number (to be attached)		
7.0	Outline drawing number (to be attached)		
8.0	Rated voltage	kV	
9.0	Rated lightning impulse withstand voltage	kV peak	
10.0	Rated 1 min power-frequency withstand voltage	kV rms	
11.0	Rated frequency	Hz	
12.0	Rated normal current	A	
13.0	Rated short-circuit breaking current	kA	
14.0	Rated short-circuit making current	kA	
15.0	Rated duration of short-circuit	s	
16.0	Rated operating sequence		
17.0	Short-time withstand current, 3 sec	kA	
18.0	Total break time	ms	
19.0	Rated capacitive breaking current	A	
20.0	Rated small inductive breaking current	A	
21.0	Rated out-of-phase breaking current	A	
22.0	Switching over current factor	pu	
23.0	Rated characteristics of short line faults		

23.1	TRV of supply circuit		
23.2	TRV peak value uc		
23.3	time delay td		
24.0	Opening time		
24.1	Maximum		
25.0	Maximum closing time		
26.0	Maximum make time		
27.0	Minimum dead time		
28.0	Gas operating pressure		
28.1	Rated pressure at..... **0C**	Kg/cm	
28.2	Alarm pressure at..... **0C**	Kg/cm	
28.3	Lock out pressure at..... **0C**	Kg/cm	
29.0	Contacts		
29.1	Type of contact		
29.2	Material		
29.3	Surface treatment		
29.4	Maximum temperature rise at.....A	**0C**	
30.0	Guaranteed contact life in terms of number of operation		
31.0	Operating mechanism		
31.1	Type		
31.2	Method of operation (hydraulic, pneumatic or motor operated spring charging)		
31.3	Mechanical life in terms of number of operation		

31.4	Method of interlocking		
31.5	Number of auxiliary contacts, NO/NC		
31.6	Rated voltage of tripping, closing and		
31.7	interlocking coil	vdc	
31.8	Method of interlocking		
32.0	Motor		
32.1	Rated voltage		
32.2	Voltage range in % of rated		
32.3	Number of phase		
32.4	Frequency		
32.5	Power		
33.0	Number of operations within one maintenance period		
33.1	At rated normal current	Recommended	
33.2		Maximum	
33.3	At Rated Breaking capacity	Recommended	
33.4		Maximum	
33.5	Accumulated current per one set	KA	
33.6	Static weight complete set	Kg	
33.7	Dynamic weight complete set	Kg	
33.8	Detailed complete set of drawing to be attached		

CONDUCTOR

S.No.	**Description**		**Proposed Data**	
			Line & Bus coupler	**Transformer Bays**

			Bays	
1.0	Manufacturer			
2.0	Country of manufacture		k V	
3.0	Type designation, number of pole		K V peak	
4.0	Indoor or outdoor		kV rms	
5.0	Applied standard, publication number and year		Hz	
6.0	Catalog number (to be attached)		A	
7.0	Outline drawing number (to be attached)			
8.0	Material			
9.0	Rated voltage			
10.0	Rated lightning impulse withstand voltage			
11.0	Rated 1 min power-frequency withstand voltage			
12.0	Voltage			
13.0	Rated normal current			
14.0	Rated short time withstand current, 1sec.	kA		
15.0	Rated Peak withstand current	Amp		
16.0	Rated capacitive current	Amp		
17.0	Gas operating pressure			
18.0	Rated pressure at..... **0C**	kg/cm		
19.0	First stage alarm pressure at..... **0C**			
20.0	Second stage alarm pressure at..... **0C**			
21.0	Material (Copper or aluminum)			
22.0	Packing detailed drawing number(to be attached)			

DISCONNECTOR				
S.NO.	Description		Proposed Data	
			Bus Disconnector	Other Disconnector
1.0	Manufacturer			
2.0	Country of manufacturer			
3.0	Type designation, number of poles, indoor or outdoor			
4.0	Applied standard, publication number and year			
5.0	Catalog number (to be attached)			
6.0	Outline drawing number (to be attached)			
7.0	Rated voltage	kV		
8.0	Rated lightning impulse withstand voltage			
8.1	To earth and betweenpole	kV peak		
8.2	Across isolating distance	kV peak		
9.0	Rated power frequency withstand voltage, 1 min			
9.1	To earth and between pole	kV rms		
9.2	Across isolating distance	kV rms		
10.0	Rated frequency			
11.0	Rated normal current			
12.0	Rated short time withstand current , 3 sec.	kA		
13.0	Rated duration of short circuit	s		
14.0	Rated peak withstand current	kA peak		

15.0	Rated capacitive breaking current and recovery voltage	A, kV	
16.0	Rated inductive breaking current and recovery voltage	A, kV	
17.0	Closed loop current switching	A, V	
18.0	Gas operating pressure	kA	
18.1	Rated pressure at..... **0C**	kg/cm	
18.2	First stage alarm pressure at..... **0C**	kg/cm	
18.3	Second stage alarm pressure at..... **0C**	kg/cm	
19.0	Contact		
19.1	Type		
19.2	Material		
19.3	Surface treatment		
19.4	Temperature rise at..... **0C**		
20.0	Operating mechanism		
20.1	Type		
20.2	Method of operation		
20.3	Method of interlocking		
20.4	Operating time, close/open	s	
20.5	Number of auxiliary contact, NO/NC		
20.6	Power requirement	W	
20.7	Rated supply voltage	Vac/phase	
	Rated supply frequency	Hz	
	Recommended maintenance period	Year	
	Packing detailed drawing number(to be attached)		

Earthing Switch

S.No.	**Description**		**Proposed Data**

			High Speed	Slow Acting
1.0	Operating speed			
2.0	Manufacturer			
3.0	Country of manufacturer			
4.0	Type designation, number of poles, indoor or outdoor			
5.0	Applied standard, publication number and year			
6.0	Catalog number(to be attached)			
7.0	Outline drawing number(to be attached)			
8.0	Rated voltage	k V		
9.0	Rated lightning impulse withstand voltage	k Vpeak		
10.0	Rated power frequency withstand voltage, 1 min.	k Vrms		
11.0	Rated frequency	Hz		
12.0	Rated short- circuit making current	A		
13.0	Guranteed number of short-circuit making operation			
14.0	Rated short-time withstand current			
15.0	Rated duration of short circuit			
16.0	Rated peak withstand current			
17.0	Gas operating pressure			
17.1	Rated pressure at..... **0C**			
17.2	First stage alarm pressure at..... **0C**			
17.3	Second stage alarm pressure at..... **0C**			
18.0	Contact			
18.1	Type			
18.2	Material			

18.3	Surface treatment			
18.4	Temperature rise at.....A			
19.0	Operating mechanism			
19.1	Type			
19.2	Method of operation			
19.3	Method of interlocking			
19.4	Operating time, close/open			
19.5	Number of auxiliary contact, NO/NC			
19.6	Power requirement	W		
20.0		Vac /Phase		
20.1	Rated supply voltage	Vdc		
20.2	Rated supply frequency	Hz		
21.0	Interrupting capability			
21.1	Inductive current			
21.2	Interrupting current			
21.3	Recovery voltage			
22.0	Capacitive current			
22.1	Interrupting current			
22.2	Recovery voltage			
22.3	Recommended maintenance period			
23.0	Packing detailed drawing number (to be attached)			
24.0	Interrupting capability			

VOLTAGE TRANSFORMER

S.NO.	Description		Proposed Data	
1.0	Manufacturer			
2.0	Country			
3.0	Type designation, number of phases			

4.0	Applied standard, publication number and year				
5.0	Catalog number (to be attached)				
6.0	Outline drawing number (to be attached)				
7.0	Rated voltage	k V			
8.0	Rated Lightning impulse withstand voltage	k V peak			
9.0	Rated power frequency withstand voltage, 1 min	kV rms			
10.0	Rated frequency	Hz			
11.0	Rated burden	VA			
12.0	Rated second voltage	V			
13.0	Metering core				
13.1	Rated output and accuracy class				
13.2	Rated transformation ratio				
13.3	Rated voltage factor				
14.0	Protective core				
14.1	Rated output and accuracy class				
14.2	Rated transformation ratio				
14.3	Rated voltage factor				
15.0	Class of insulation and material	**0C**			
16.0	Maximum temperature rise at.....A	kg			
17.0	Net weight				
18.0	Packing detailed drawing (to be attached)				
Current Transformer					
S.No.	**Description**		**Proposed Data**		
			Line	**Bus Coupler**	**Transformer**

			Bay	Bay	Bay
1.0	Manufacturer				
2.0	Country of manufacturer				
3.0	Type designation, number of phases				
4.0	Applied standard, publication number and year				
5.0	Catalog number (to be attached)				
6.0	Outline drawing number (to be attached)				
7.0	Mounted inside GIS enclosure or on power cables				
8.0	Ring type or bushing type				
9.0	Rated voltage	kV			
10.0	Rated lightning impulse withstand voltage	kV peak			
11.0	Rated power frequency withstand voltage, 1 min	kV rms			
12.0	Rated frequency	Hz			
13.0	Rated primary current	A			
14.0	Rated short time thermal current(3s)	kA			
15.0	Rated dynamic current	kA peak			
16.0	Rated continuous thermal current in percentage of rated primary current	%			
17.0	Class of insulation & material				
18.0	Maximum temperature rise at.....A				
19.0	Metering core				
19.1	Rated transformation ratio				
19.2	Rated output and				

	accuracy class				
19.3	Instrument security factor				
20.0	Protection core				
20.1	Rated transformation ratio				
20.2	Rated output and accuracy class				
20.3	Accuracy limit factor				
21.0	Net weight				
22.0	Packing detailed drawing number (to be attached)				

Sealing End

S.No.	Description		Proposed Data
1.0	Manufacturer		
2.0	Standards		
3.0	Material		
4.0	Rated power frequency voltage	Yes / no	
4.1	(1 min/20 □C)	k V	
5.0	Breakdown dielectric stress	k V /mm	
6.0	Maximum working dielectric stress	k V /mm	
7.0	Impulse withstand voltage	k V	
8.0	Creepage distance (minimum)	mm	
9.0	Expansion devices	Yes / no	
10.0	Splicing method of conductor		
11.0	Compound for internal insulation		
12.0	Nominal weight	Kg /pc	

Bay Board

S.No	Description		Proposed Data
1.0	Manufacturer		
2.0	Type		
3.0	Applied standard, publication number and year		
4.0	Confirm to be supplied according to specification	Yes /no	
5.0	Material		
5.1	Steel thickness (minimum)		
5.2	- door	Mm	
5.3	- side/top/near panels	Mm	
6.0	Surface finish	k V /mm	
6.1	Total Paint thickness(Minimum)		
7.0	Dimension		
7.1	Length		
7.2	Width		
7.3	Height		
8.0	Total net weight		
9.0	Packing detailed drawing number(to be attached)		
Type test certification			
Type test made on identical design of equipment to those offered			Proposed Data
a	Circuit breakers		
	Terminal faults: (Test duties 1,2,3,4 and 5		
	to IEC 56) (with a first phase to clear factor of 1.5)		
	Making current		
	Short-time current		

	Dielectric		
	Temperature rise		
	Mechanical endurance		
	Short-line faults (60%, 75%, 90%)		
	Out-of-Phase tests		
	Capacitance switching		
	Low inductive switching		
	Special tests : Parallel switching		
	Partial discharges		
b)	Disconnectors		
	Short-time current	One second	
		Three second	
	Peak current		
	Dielectric withstand		
	Temperature endurance		
	Capacitance switching		
	Peak current		
c)	Busbars and Connections		
	Short-time current	One second	
		Three second	
d)	**Earthing switches**		
	Short-time current	One second	
		Three second	
	Peak current		
	Making current capability Dielectric withstand		
	Dielectric withstand		
	Mechanical endurance		
	Type Tests Made on Identical Designs of		

	Equipment to Those Offered		
	Interrupting capability for line coupling currents :		
	- capacitive currents		
	- inductive currents		
	Peak current		
	Making current capability Dielectric withstand		

Bidders Name : _____

Signature : _____

Name : _____

Designation : _____

Seal of Company Date : _____

SCHEDULE – C16
POWER TRANSFORMER

Sr.No.	Particular	Specified / Required	Offered
1.0	General		
1.1	Make		
1.2	Type	As per Annexure C of specification	
2.0	Nominal continuous rating, KVA		
2.1	HV winding	As per Annexure C of specification	
2.2	LV winding	As per Annexure C of specification	
2.3	Type of Cooling	ONAN/ONAF	
2.4	Rating available at different cooling	ONAN - 80% ONAF-100%	
3.0	Rated voltage (KV)		
3.1	HV winding	As per Annexure C of specification	
3.2	LV winding	As per Annexure C of specification	
4.0	Rated current (Amps)		
4.1	HV winding		
4.2	LV winding		
5.0	Connections		
5.1	HV winding	As per Annexure C of specification	
5.2	LV winding	As per Annexure C of specification	
5.3	Vector group reference	As per Annexure C of specification	
6.0	Impedance at principal tap rated current and frequency at 75 °C with 100 % Rating (%)		
6.1	Impedance (%)	As per Annexure C of specification	
6.2	Reactance (%)		
6.3	Resistance (%)		
6.4	Impedance at lowest tap rated current and frequency at 75 °C with 100 % Rating (%)		
6.5	Impedance at highest tap rated current and frequency at 75 °C with 100 % Rating (%)		
7.0	Resistance of the winding at 75^0Cat principal tap (ohm)		
7.1	a) HV		

7.2	b)LV		
8.0	Zero sequence impedance (ohm)		
8.1	a) HV		
8.2	b) LV		
9.0	Guaranteed maximum losses at principal tap at full load and 75^0 C without any positive tolerance kW		
9.1	No load losses (max.)	As per Annexure C of specification	
9.2	Load losses (max.)	As per Annexure C of specification	
9.3	Cooler fan losses (max.)		
9.4	Total I^2R losses of winding @ 75 deg C		
9.5	Total stray losses @ 75 deg C		
9.6	Total Load losses (max.)		
9.7	No load loss at maximum permissible voltage and frequency (approx.) kW		
10.0	Temperature rise over reference design ambient of 40 ^{0}C		
10.1	Top oil by thermometer ^{0}C	40^0 C	
10.2	Winding by thermometer ^{0}C	45^0 C	
10.3	Winding gradient at rated current ^{0}C		
10.3.1	HV		
10.3.2	LV		
11.0	Efficiency		
11.1	Efficiency at 75^0 C and unity power factor %		
11.1.1	At 110% load		
11.1.2	At 100% load		
11.1.3	At 80% load		
11.1.4	At 60% load		
11.1.5	At 40% load		
11.1.6	At 20% load		
11.2	Efficiency at 75^0 C and 0.8 power factor lag %		
11.2.1	At 110% load		
11.2.2	At 100% load		
11.2.3	At 80% load		
11.2.4	At 60% load		
11.2.5	At 40% load		
11.2.6	At 20% load		
11.3	Maximum efficiency %		
11.4	Load and power factor at which Max efficiency occurs		
12.0	Regulation (%)		
12.1	Regulation at full load at 75^0 C		
12.1.1	At unity power factor		
12.1.2	At 0.8 power factor lagging		
12.2	Regulation at 110% load at 75^0 C		
12.2.1	At unity power factor		
12.2.2	At 0.8 power factor lagging		

Schedules & Annexure **Schedule C16**

13.0	Tapping		
13.1	Type		
13.2	Capacity		
13.3	Range-steps x % variation	As per Annexure C of specification	
13.4	Taps provided on HV winding (Yes/No)		
14.0	OLTC gear		
14.1	Make		
14.2	Type		
14.3	Reference std		
14.4	No of compartment		
14.5	Mounting arrangement	Side mounted	
14.6	Rated current Amp		
14.7	Rated step capacity, kVA		
14.8	Short circuit withstand for 2 secs, kA		
14.9	Time required for one step change sec.		
14.10	Rated voltage for motor, V AC		
14.11	Rating of motor		
14.12	Rated voltage for auxiliaries V		
14.13	Consumption of auxiliaries		
14.14	OLTC features as per specification, Yes/No		
14.15	Does the overload rating of OLTC match with that of the transformer under all conditions Yes/No		
15.0	Transformer Monitoring relay – REGDA		
15.1	Make		
15.2	Reference standard		
15.3	Overall dimensions, mm		
16.0	Cooling system		
16.1	Type of cooling	As per Annexure C of specification	
16.2	No. of cooling unit groups		
16.3	Capacity of cooling units		
16.4	Mounting of radiators		
16.5	Number of radiators and Size		
16.6	Type & size of radiator header main valve		
16.7	Type & size of individual radiator valve		
16.8	Total radiating surface, sq mm		
16.9	Thickness of radiator tubes, mm	Minimum 1.2 mm	
16.10	Schematic flow diagram of the cooling system furnished (Yes/No)		
16.11	Type and make of Fan motor		
16.12	No. of fan motor per bank (Working + Standby)		
16.13	Rated Power Input (kW)		
16.14	Rated Voltage, Speed of Motor		
16.15	Efficiency of motor at Full load(%)		
16.16	Locked Rotor current(Amps)		
17.0	Details of tank		

17.1	Material	Robust mild steel plate without pitting and low carbon content	
17.2	Thickness of sides mm		
17.3	Thickness of bottom mm		
17.4	Thickness of cover mm		
17.5	Confirmation of tank designed and tested for vacuum pressure (Ref: CBIP manual) (Yes/No)		
17.5.1	Vacuum mm of Hg. / (kN/m^2)	As per CBIP	
17.5.2	Pressure mm of Hg	Twice the normal head of oil / normal pressure + 35 kN/m^2 whichever is lower , As per CBIP	
17.6	Is the tank lid slopped?	Yes	
17.7	Inspection cover provided (Yes/No)	As per clause No 3.2.1.5	
17.8	Location of inspection cover (Yes/No)	As per clause No 3.2.1.5	
17.9	Min. dimensions of inspection cover (provide list of all inspection cover with dimension), mm x mm		
18.0	Core		
18.1	Type:	Core	
18.2	Core material grade	Premium grade minimum M4 or better	
18.3	Thickness of lamination mm	Max. 0.27 mm with insulating coating on both sides	
18.4	Insulation between core lamination		
18.5	Design flux density of the core at rated condition at principal tap, Tesla		
18.6	Maximum flux density allowed in the core at extreme over excitation / over fluxing , Tesla		
18.7	Equivalent cross section area of core, mm^2		
18.8	Guaranteed No load current at 90% / 100% / 110% rated voltage & frequency (Amp)		
18.8.1	HV		
18.8.2	LV		
19.0	Type of winding		
19.1	HV		
19.2	LV		
19.3	Conductor material	Electrolytic copper as per relevant standard	
19.4	Maximum current density allowed, Amp per mm^2	3.0 A/ mm^2	
19.5	Gauge/area of cross section of conductor, mm^2		
19.5.1	HV		
19.5.2	LV		

19.6	Maximum current density achieved in winding (LV/HV/HVT) – Amps/ mm^2		
19.7	Insulating material		
19.7.1	HV turn		
19.7.2	LV turn		
19.7.3	LV- core		
19.7.4	HV-LV		
19.8	Insulating material thickness, mm		
19.8.1	HV turn		
19.8.2	LV turn	-	
19.8.3	LV to core		
19.8.4	HV to LV		
20.0	Minimum design clearance , mm		
20.1	HV to earth in air		
20.2	HV to earth in oil		
20.3	LV to earth in air		
20.4	LV to earth in oil	-	
20.5	Between HV & LV in Air		
20.6	Between HV & LV in oil		
20.7	Top winding and yoke	-	
20.8	Bottom winding and yoke		
21.0	Insulating oil		
21.1	Quantity of oil Ltrs	-	
21.1.1	In the transformer tank		
21.1.2	In each radiator		
21.1.3	In OLTC chamber		
21.1.4	Total quantity		
21.2	10% excess oil furnished?	Yes	
21.3	Type of oil	New insulating oil as per IS: 335, and Cl. 4.2.7 of the specification	
21.4	Oil preservation system provided (Yes/No)	As per Annexure C of specification	
22.0	Bushing		
22.1	Make		
22.2	Type		
22.3	Reference standard		
22.4	Voltage class, kV		
22.4.1	HV side bushing		
22.4.2	LV side line and neutral bushing		
22.5	Creepage factor for all bushing mm / kV	As per Annexure C of specification	
22.6	Rated current , Amp		
22.6.1	HV bushing		
22.6.2	LV line and neutral bushing		
22.7	Rated thermal short current		
22.7.1	HV bushing	As per Annexure C of specification	
22.7.2	LV line and neutral bushing	As per Annexure C of	

		specification	
22.8	Weight Kg		
22.8.1	HV bushing		
22.8.2	LV line and neutral bushing		
22.9	Free space required for bushing removal, mm		
22.9.1	HV bushing		
22.9.2	LV line and neutral bushing		
23.0	Terminal connections		
23.1	HV	As per Annexure C of specification	
23.2	LV	As per Annexure C of specification	
23.3	LV Neutral	As per Annexure C of specification	
24.0	H.V. Cable box/Terminals		
24.1	Suitable for cable/conductor type size	As per Annexure C of specification	
24.2	Termination height , mm	1000 mm , minimum	
24.3	Gland plate dimension mm x mm		
24.4	Gland plate material	Aluminum	
24.5	Gland plate thickness , mm	5 mm minimum	
24.5	Phase to clearance inside box / terminals , mm		
24.6	Phase to earth inside box / terminals , mm		
25.0	L.V line side cable box		
25.1	Suitable for cable type , size	As per Annexure C of specification	
25.2	Termination height , mm	1000 mm , minimum	
25.3	Gland plate dimension mm x mm		
25.4	Gland plate material	Aluminum	
25.5	Gland plate thickness , mm	5 mm minimum	
25.6	Phase to clearance inside box / terminals , mm		
25.7	Phase to earth inside box , mm		
26.0	LV Neutral cable box		
26.1	Suitable for cable type , size	As per Annexure C of specification	
26.2	Termination height , mm		
26.3	Gland plate dimension mm x mm		
26.4	Gland plate material	Aluminum	
26.5	Gland plate thickness , mm	5 mm minimum	
26.6	Phase to clearance inside box , mm		
26.7	Phase to earth inside box , mm		
27.0	Marshalling box cubical provided as per clause no. of spec. (Yes / no)		
27.1	Mounting of marshalling box	Project specific to be filled up (Separate / tank mounted)	

28.0	Neutral Current Transformer (NCT)			
28.1	Type			
28.2	Make			
28.3	Reference standard			
28.4	CT Ratios			
28.5	Burden ,VA			
28.6	Class of Accuracy	PS	5P20	
28.7	KPV , volts , minimum			
28.8	Resistance, ohm @ 75 deg C, maximum			
28.9	Magnetizing current @ Vk/4 , mA , maximum			
28.10	Short time withstand current	26.3 kA for 3 sec.		
29.0	Winding current transformer (WCT)			
29.1	Type			
29.2	Make			
29.3	Reference standard			
29.4	CT ratio			
29.5	Burden ,VA	Manufacturer Std.		
29.6	Class of accuracy	Manufacturer Std.		
30.0	Pressure release device			
30.1	Minimum pressure the device is set to rupture			
30.1.1	For main tank			
30.1.2	For OLTC			
31.0	Alarm and trip contact ratings of protective devices			
31.1	Rated/making/ breaking currents , Amp @ voltage for			
31.1.1	PRV for main tank			
31.1.2	PRV for OLTC			
31.1.3	Buchholz relay			
31.1.4	Oil surge relay for OLTC			
31.1.5	Sudden pressure relay			
31.1.6	OTI			
31.1.7	WTI			
31.1.8	Magnetic oil gauge			
32.0	Fittings accessories each transformer furnished as per clause No. (Bidder shall attach separate sheet giving details, make and bill of materials)			
33.0	Painting: as per clause for the transformer , cable boxes, radiator, marshalling box, RTCC etc (Yes/No)			
34.0	Over all transformer dimensions			
34.1	Length , mm	6.5 meters maximum allowed		
34.2	Breadth , mm	5.0 meters maximum allowed		
34.3	Height , mm	5.0 meters maximum		

		allowed	
35.0	Transformer tank dimensions		
35.1	Length , mm		
35.2	Breadth , mm		
35.3	Height , mm		
36.0	Marshalling box dimensions		
36.1	Length , mm		
36.2	Breadth , mm		
36.3	Height , mm		
37.0	Weight data		
37.1	Core, kG		
37.2	Frame parts, kG		
37.3	Core and frame, kG		
37.4	Total winding, kG		
37.5	Core and frame winding, kG		
37.6	Tank, kG		
37.7	Tank lid, kG		
37.8	Empty conservator tank , kG		
37.9	Each radiator empty , kG		
37.10	Total weight of all radiator empty , kG		
37.11	Weight of oil in tank , kG		
37.12	Weight of oil in each conservator , kG		
37.13	Weight of oil in each radiators , kG		
37.14	Total weight of oil in radiator , kG		
37.15	OLTC gear including oil , kG		
37.16	Total transport weight of the transformer , kG		
37.17	Total transport weight of the transformer with OLTC and all accessories		
38.0	Volume data		
38.1	Volume of oil in main tank , liters		
38.2	Volume of oil between highest and lowest levels of main conservator ,liters		
38.3	Volume of oil between highest and lowest levels of OLTC conservator, liters		
38.4	Volume of oil in each radiator , liters		
38.5	Total volume of oil in radiators , liters		
38.6	Volume of oil in OLTC , liters		
38.7	Transformer total oil volume , liters		
39.0	Shipping data		
39.1	Weight of heaviest package, kG		
39.2	Dimensions of the largest package (L x B x H) mm		
40.0	Tests		
40.1	All in process tests confirmed as per Cl. (Yes /No)		
40.2	All types tests confirmed as per Cl. (Yes /No)		
40.3	All in routine tests confirmed as per Cl.		

	(Yes /No)		
40.4	All in special tests confirmed as per Cl. (Yes /No)		

Bidders Name : _____

Signature : _____

Name : _____

Designation : _____

Seal of Company

Date : _____

SCHEDULE – C17

66 KV OUT DOOR LIGHTNING ARRESTER

Sr. No.	Description	Data By Purchaser	Data by Supplier
1	Name of manufacturer		
2	Type	Gapless, ZnO type, single pole, heavy duty, station class, pedestal mounted	
3	Model		
4	No. of units.		
5	Installation	Outdoor	
6	Application	Protection of Transformers, circuit breakers, lines and other outdoor S/S equipment.	
7	LA connection to system	Phase to earth	
8	Type of Conductor	ACSR Zebra / Goat	
9	Construction	Single Phase	
10	Rated voltage of arrester (KVrms)	60 KV	
11	Nominal discharge current (Amps) (8x20 micro sec. wave) peak value	10KA	
12	System Particulars		
i)	Highest System Voltage	72.5 KV	
ii)	Frequency	50HZ ± 5%	
iii)	System neutral	Solidly earthed	
iv)	Max. value of temporary over voltage & its max. duration		
	- Insulation level of equipment to be protected	325 KVp	
	- System short circuit level	31.5KA for 3 seconds.	
13	Maximum continuous operating voltage (MCOV)	52KV	
14	Impulse withstand current	100KAp	
15	Long Duration discharge class	3	
16	Minimum single impulse energy capability		
17	Maximum residual voltage at switching impulse current of 1KAp (30/60 micro sec. wave)	136 KVp	

Schedules & Annexure **Schedule C17**

Sr. No.	Description	Data By Purchaser	Data by Supplier
18	Max. residual voltage (1x20 micro sec. wave)		
i)	At 05 KAp		
ii)	At 10 KAp		
iii)	At 20 KAp		
19	Minimum creepage distance	31 mm/KV	
20	Pressure relief class	40KA	
21	Reference current (mA)		
22	Leakage current at COV (mA)		
	Resistive		
	Capacitive		
23	Dry and wet power frequency withstand voltage of arrester insulation (KVrms)		
24	Virtual steepness for front of wave for above (KV/micro sec.)		
25	Ratio of system voltage withstand level to protection level of surge arrester		
26	High current impulse withstand 4/10 micro second peak value (KV)		
27	Long duration current Impulse		
i)	Current peak.		
ii)	Virtual duration.		
28	Temporary Over Voltage Capacity (KVp)		
i)	At 0.1 Sec.		
ii)	At 1.0 Sec.		
iii)	At 10.0 Sec.		
iv)	At 100.0 Sec.		
29	Weight of complete unit (Kg)		
30	Height of complete unit from base to the line side (mm)		
31	Minimum recommended spacing between arresters Centro to Centro (mm)		
32	Clearance required from ground equipment at various heights of arresters unit (mm)		

Schedules & Annexure **Schedule C17**

Sr. No.	Description	Data By Purchaser	Data by Supplier
33	Earthing arrangement provided for earthing side of arresters.		
34	Mounting flanges dimensional details.		
35	Type and range of milli-ampere meter.		
36	Type and specifications of the surge connecters.		
37	Surge counter min. current for recording a lightning stroke	200 Amp	
38	Surge counter max. disch. Current withstand	100KA peak for 4/10 wave shape.	
39	Range of continuous leakage current at rated voltage with variation due to change in temperature & frequency		
40	Size and length of flexible Cu cable for connection between LA & surge counter		
41	Voltage time curve for thermal stability of LA after a stroke	To be provided	
42	Paint shade of surge counter housing	Polyurethane, 692 of IS-5	

Bidders Name : _____

Signature : _____

Name : _____

Designation : _____

Seal of Company Date : _____

SCHEDULE – D
LIST OF INSTALLATIONS

S.No.	Purchaser	Project	PF Ref.	Brief Description	Value	Target Commissioning	Commissioned	Performance	Person to whom reference may be made	Remarks
1	2	3	4	5	6	7	8	9	10	11

Bidders Name : _____

Signature : _____

Name : _____

Seal of Company

Designation : _____

Date : _____

SCHEDULE – E1

TECHNICAL DEVIATIONS FROM THE SPECIFICATION

(This shall form part of Technical Bid)

All the technical deviation from the tender specification shall be listed out by the Bidder, para by para in this schedule. Deviation taken in covering letter, standard terms and/or body of the Bid but not listed herein will make the Bid liable for rejection as 'Irresponsive'

S.No.	Section/Sub-Section	Part	Para	Deviation	Justification
1	2	3	4	5	6

Certified that above are the only technical deviations from the tender Specification

Name of Firm : _____

Signature of Bidder : _____

Designation : _____

Date : _____

Seal of Company

SCHEDULE – E2

COMMERCIAL DEVIATIONS FROM THE SPECIFICATION

(This shall form part of Technical Bid)

All the commercial deviation from the tender specification shall be listed out by the Bidder, para by para in this schedule. Deviation taken in covering letter, standard terms and/or body of the Bid but not listed herein will make the Bid liable for rejection as 'Irresponsive'.

S.No.	Section/Sub-Section	Part	Para	Deviation	Justification
1	2	3	4	5	6

Certified that above are the only technical deviations from the tender Specification

Name of Firm : _____

Signature of Bidder : _____

Designation : _____

Date : _____

Seal of Company

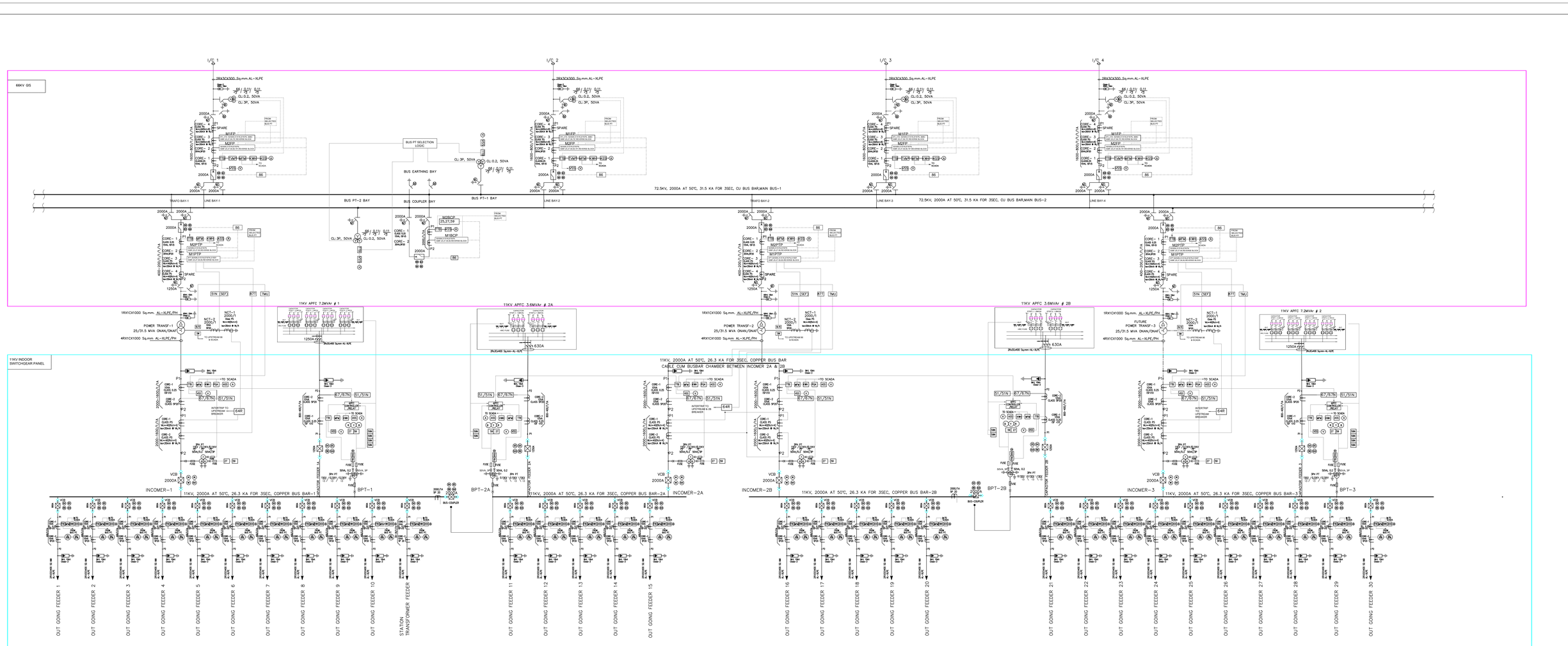

LEGEND

- POWER CIRCUIT
- CONTROL CIRCUIT
- BUSBAR
- LIGHTNING ARRESTOR
- 3 POSITION MOTORISED ISOLATOR WITH EARTH
- POTENTIAL TRANSFORMER
- MOTORISED EARTH SWITCH
- CURRENT TRANSFORMER
- SF6 CIRCUIT BREAKER
- POWER TRANSFORMER
- FUSE
- DRAWOUT TYPE VACCUM CIRCUIT BREAKER
- UNDER VOLTAGE PROTECTION
- OVER VOLTAGE PROTECTION
- MFM MULTI FUNCTION METER
- PQA POWER QUALITY ANALYSER
- KWH ENERGY METER
- ASS AMMETER SELECTOR SWITCH
- A AMMETER
- VSS VOLTAGE SELECTOR SWITCH
- V VOLTMETER
- TTB TEST TERMINAL BLOCK
- 87L LINE DIFFERENTIAL PROTECTION
- 21 DISTANCE PROTECTION
- 25 SYNC-CHECK RELAY
- 64R RESTRICTED EARTH FAULT
- 64N TAP /POSITION & RAISE/LOW ON OLTC
- DIFFERENT SWITCHES ON POWER TRANSFORMER - HV, WTI, LV WTI, OTI, Main Tank OSR, SPR, PRV, Buchholz, MOG, OLTC OSR trip, OLTC Out of Step/Stuck Up/Motor trip
- 87N NEUTRAL DISPLACEMENT PROTECTION
- 67/67N DIRECTIONAL OVERCURRENT & EARTH FAULT
- 51/51N OVERCURRENT & EARTH FAULT
- BrCoPr BROKEN CONDUCTOR PROTECTION
- 50LBB LOCAL BREAKER BACKUP PROTECTION
- (86) LOCK OUT RELAY
- (74) ANTIPUMPING RELAY/N
- (52a) BREAKER CONTACT MULTIPLIER
- (95) TRIP CIRCUIT SUPERVISION RELAY
- 87T TRF. DIFFERENTIAL PROTECTION
- 51SEF STAND BY EARTH FAULT PROTECTION
- 50BF BREAKER FAILURE PROTECTION
- 50/50N INSTANTANEOUS OVERCURRENT & EARTH FAULT

NOTE:-

1. BURDENS ARE TENDER PURPOSE ONLY AND MAY CHANGE SUBJECT TO CALCULATIONS DURING DETAILED ENGINEERING.
2. REFER CLAUSE 19 OF SPECIFICATION FOR DETAILED FUNCTIONAL REQUIREMENT OF RELAYS.
3. ONE BPT TO BE PROVIDED FOR EACH BUS SECTION.
4. SELECTED PT BASED ON BPT LOGIC FOR PROTECTION AND METERING.
5. THIS DRAWING IS TENTATIVE AND FOR TENDER PURPOSE ONLY.
6. REFER TENDER SPECIFICATION FOR FURTHER DETAILS.

REV. No.	DESCRIPTION	DATE	PRPD. BY	CHKD. BY	APPR. BY
A	FIRST DRAWING	07.03.25	S.K	BS US	AS
B	SECOUND DRAWING				
C					
D					

BSES Rajdhani Power Limited

BSES BHAWAN
Nehru Place, New Delhi - 110019

DRAWN	SK		
CHECKED	BS/US		
APPD.	AS		
DATE	07.03.25		
SCALE	NTS		

TITLE:- SLD OF 2X31.5MVA 66/11KV MOLARBAND GRID

DWG No.:- BRPL-MOLARBAND-DEE-B-0001

SHEET 1 OF 1

REV. 00

VER. 00

66 / 11KV MOLARBAND SUBSTATION - GROUND FLOOR

TOTAL AREA - 9450.66SQ MTR.
SHELTER AREA - 918.86 SQ MTR.

BRPL AREA - 8531.80 SQ MTR. (AS PER DDA DRAWING)

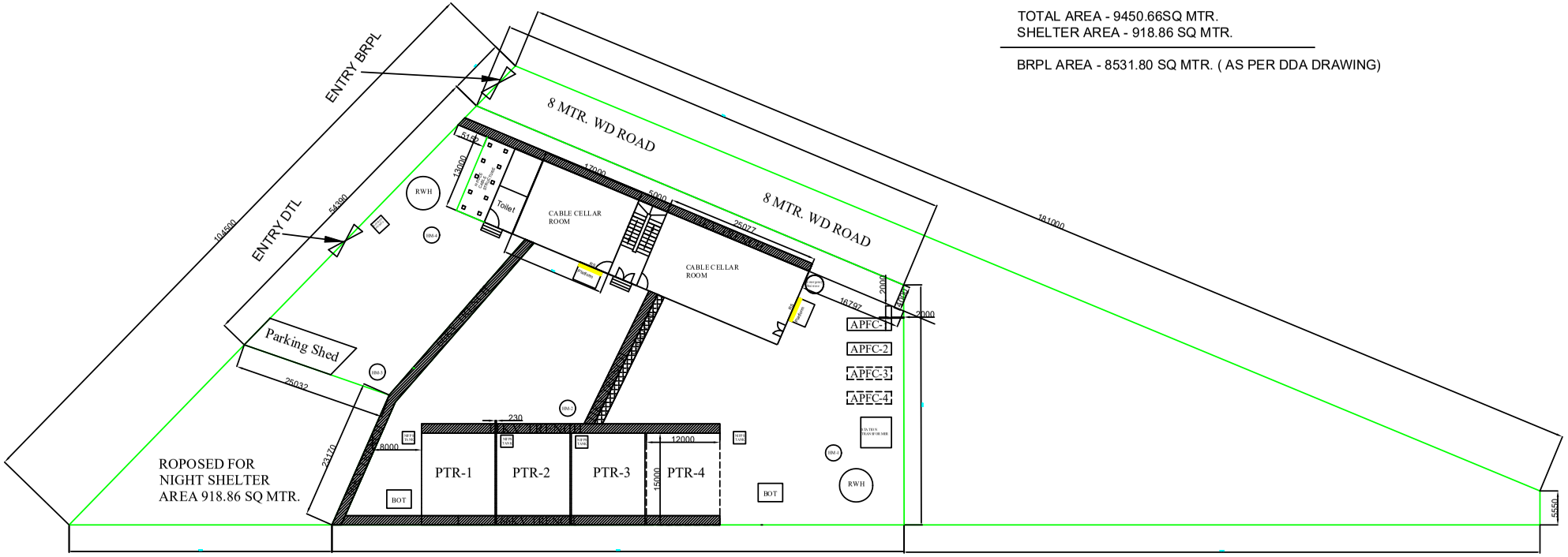

66 / 11KV MOLARBAND SUBSTATION - FIRST FLOOR

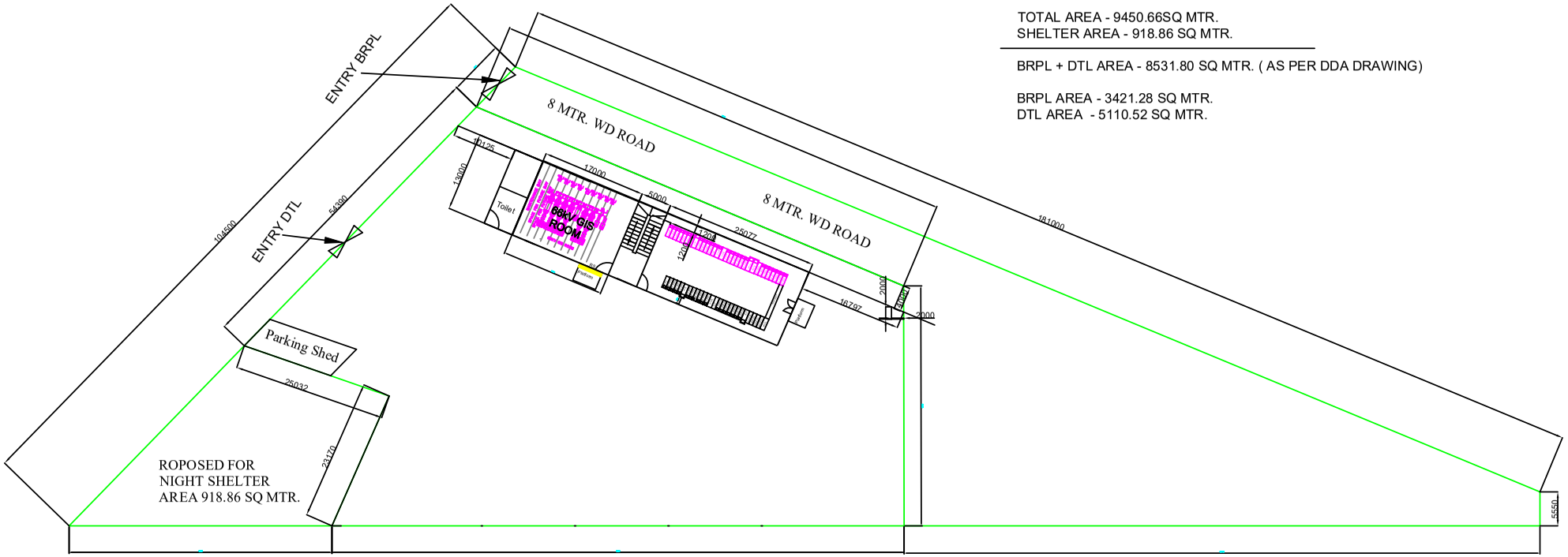

TOTAL AREA - 9450.66SQ MTR.
SHELTER AREA - 918.86 SQ MTR.

BRPL + DTL AREA - 8531.80 SQ MTR. (AS PER DDA DRAWING)

BRPL AREA - 3421.28 SQ MTR.
DTL AREA - 5110.52 SQ MTR.

66 / 11KV MOLARBAND SUBSTATION - SECOND FLOOR

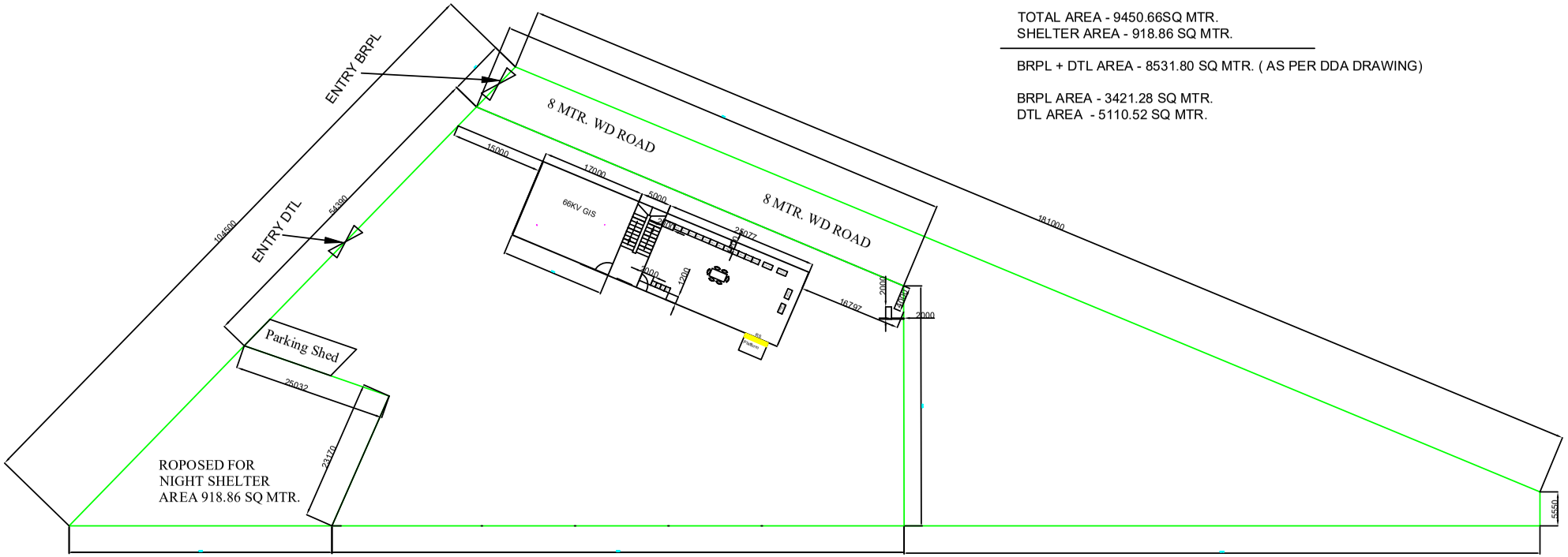
ENTRY BRPL
ENTRY DTL
8 MTR. WD ROAD
8 MTR. WD ROAD
66KV GIS
Parking Shed
ROPOSED FOR
NIGHT SHELTER
AREA 918.86 SQ MTR.
15000
17000
5000
2000
2000
2

TECHNICAL SPECIFICATIONS OF VAMASUNDARI GRID

PACKAGE -A

SCHEME 2

(CIVIL & ELECTRICAL)

BSES Rajdhani Power Limited
BSES Bhawan, Nehru Place, New Delhi- 19

TECHNICAL SPECIFICATION

FOR

CIVIL WORKS

Prepared by	**Konchada Rao**			**Rev: 0**
Reviewed by				**Date: 02nd May, 2025**
Approved by	**Ajay Karan**			

1.0 GENERAL REQUIREMENT

1.1. This chapter includes the technical requirements for Establishment of **66/11 KV GIS Substation at VamaSundari KNMA** including associated design and preparation of all civil & structural drawings and execution of all associated civil works. This chapter deals mainly with technical specifications for the design, supervision and construction of complete civil works including structural and finishing works.

1.2. The specifications are intended for general description of work, quality and workmanship. The specifications are not however exhaustive to cover minute details and the work shall be executed according to relevant latest Indian Standards/IRC specifications/CPWD specifications. In the absence of the above, the work shall be executed according to the best prevailing practices in the trade, recommendations of relevant American or British Standards or to the instructions of Engineer. The IS standards/IRC specifications/CPWD specifications to be followed are mentioned in the technical specifications attached hereto. They shall be latest edition/version of the same issued 15 days prior to the date of opening of this tender. The Contractor is expected to get himself clarified on any doubts about the specifications etc. before bidding and the discussions recorded in writing with the Owner in respect of interpretation of any portion of this document.

1.3. The work shall be carried out according to the design / drawings to be developed by the Contractor and approved by the Owner based on Tender Drawings supplied to the Contractor by the Owner. For all buildings, structures, foundations etc. necessary layout and details shall be developed by the Contractor keeping in view the functional requirement of the Sub-Station facilities and providing enough space and access for operation, use and maintenance based on the input provided by the Owner. Certain minimum requirements are indicated in this specification for guidance purposes only. However, the Contractor shall quote according to the complete requirements.

1.4. The Contractor shall take all necessary precautions to protect all the existing equipments, structures, facilities & buildings etc. from damage. In case any damage occurs due to the activities of the Contractor on account of negligence, ignorance, accidental or any other reason whatsoever, the damage shall be made good by the Contractor at his own cost to the satisfaction of the Engineer. The Contractor shall also take all necessary safety measures, at his own cost, to avoid any harm / injury to his workers and staff from the equipment & facilities of the power station.

1.5. During the progress of work, the Engineer will exercise supervision of the work to ensure that the technical provisions of the contract are being followed and the work is being executed accurately and properly. However, such supervision shall in no way relieve the Contractor of the responsibility for executing the work in accordance with the specifications.

1.6. Before submitting the bid, the Contractor shall inspect and examine the site and its surroundings and shall satisfy himself as to the nature of the ground and subsoil, the availability of materials necessary for completion of the work, means of access to site and in general shall himself obtain all necessary information as to risks, contingencies and other circumstances which may influence or affect his offer. No extra claim consequent on any misunderstanding or otherwise shall be allowed.

1.7. During execution, if any additional requirement arises for successful commissioning of grid ,then same shall be in scope of vendor by considering all safety and quality standards in all aspects

2.0 GEOTECHNICAL INVESTIGATION

The Owner will carry out Geo Technical Investigation and Topographical Survey for the entire Sub-Station plot including switchyard. The copy of the report will be given as an input to bidder for Civil

Design & estimation work. In case of any further detailed study is required, same shall be in scope of bidder.

3.0 SITE PREPARATION

3.1. Scope

3.1.1. This clause covers the design and execution of the work for site preparation, such as clearing of the site, the supply and compaction of fill material, excavation and compaction of backfill for foundation, road construction, drainage, trenches and final topping by stone (broken hard stone). This work shall also include disposal of any non-essential/excess soil or malba.

3.2. General

3.2.1. The layout and levels of all structures, etc shall be made by the Contractor at his own cost from the general grids of the plot and benchmarks finalized / approved by the Owner. (The required filling up to formation level shall be in the scope of Vendor). The Contractor shall give all help in instruments, materials and personnel to the Owner for checking the detailed layout and shall be solely responsible for the correctness of the layout and levels.

3.2.2. The Contractor shall have to make good to all the damages to the boundary wall and gates during work execution.

3.2.3. Contractor shall develop a building layout and other layouts so that the trees inside the plot shall be avoided from cutting. In extreme conditions, if the tree cutting is unavoidable, necessary liaison for permission shall be on part of Contractor from respective Govt. Agency. Requisite formalities shall be carried out by Owner. Fee shall be borne by the Owner. Compensatory plantation shall be done (if required) by vendor; BRPL shall provide space for the same.

3.2.4. The Contractor shall develop the site area to meet the requirements of the intended purpose. The site preparation shall confirm to the requirements of relevant sections of this specification or as per stipulations of standard specifications.

3.2.5. If fill material is required, the fill material shall be suitable for the above requirement. The fill shall be such a material and the site so designed as to prevent the erosion by wind and water of material from its final compacted position or the in-situ position of undisturbed soil.

3.2.6. Material unsuitable for filling works shall be removed and replaced by suitable fill material and to be approved by the Owner.

3.2.7. Backfill material around foundations or other works shall be suitable for the purpose for which it is used and shall be compacted to the density described under Compaction. Excavated material not suitable or not required for backfill shall be disposed off by the contractor in areas as directed by Owner upto a maximum lead of 5 km. Backfill material if found having mix of earth and fly ash should not be used for top 30 cm of formation level and should be supplemented with earth at the cost of contractor. The old / existing foundations if not required shall be dismantled by the contractor.

3.3. Excavation and Backfill

3.3.1. Excavation and backfill for foundations shall be in accordance with the relevant code.

3.3.2. Whenever water level is met during the excavation, it shall be dewatered and water level shall be maintained below the bottom of the excavation level during excavation, concreting and backfilling. Nothing extra shall be payable by the owner on this account.

3.3.3. When embankments are to be constructed on slopes of 15% or greater, benches or steps with horizontal and vertical faces shall be cut in the original slope prior to placement of embankment material. Vertical face shall measure not more than 1 m in height.

3.3.4. Embankments adjacent to abutments, culverts, retaining walls and similar structures shall be constructed by compacting of the material in successive uniform horizontal layers not exceeding 15 cm in thickness (of loose material before compaction). Each layer shall be compacted as required by means of mechanical tampers approved by the Owner. Rocks larger than 10cm in any direction shall not be placed in embankment adjacent to structures.

3.3.5. Earth embankments of roadways and site areas adjacent to buildings shall be placed in successive uniform horizontal layers not exceeding 20 cm in thickness in loose stage measurement and compacted to the full width specified. The upper surface of the embankment shall be shaped so as to provide complete drainage of surface water at all times.

3.4. Compaction

3.4.1. The density to which fill materials shall be compacted shall be as per, relevant IS and as per direction of Owner. All compacted sand filling shall be confined as far as possible. Backfilled earth shall be compacted to minimum 95% of the Standard Proctor's density at OMC. The sub grade for the roads and embankment filling shall be compacted to minimum 95% of the Standard Proctor's density at OMC. Cohesion less material sub grade shall be compacted to 70% relative density (minimum).

3.4.2. At all times unfinished construction shall have adequate drainage. Upon completion of the roads surface course, adjacent shoulders shall be given a final shaping, true alignment and grade.

3.4.3. Each layer of earth embankment when compacted shall be as close to optimum moisture content as practicable. Embankment material which does not contain sufficient moisture to obtain proper compaction shall be wetted. If the material contains any excess moisture, then it shall be allowed to dry before rolling. The rolling shall begin at the edges overlapping half the width of the roller each time and progress to the center of the road or towards the building as applicable. Rolling will also be required on rock fills. No compaction shall be carried out in rainy weather.

3.5. Requirement for fill material under foundation

3.5.1. The thickness of fill material under the foundations shall be such that the maximum pressure

from the footing, transferred through the fill material and distributed onto the original undisturbed soil will not exceed the allowable soil bearing pressure of the original undisturbed soil. For expansive soils the fill materials and other protections etc. to be used under the foundation has to be approved by the Owner.

4.0 CODES AND STANDARDS

All standards, specifications, acts and code of practice shall be followed. In case of conflict between this specification and those (IS standard/ IRC specification/CPWD Specification, etc.) referred to herein, the former shall prevail.

5.0 SUBMISSIONS

The following documents shall be submitted by the Contractor for approval of the BRPL prior to commencement of fabrication and erection / construction.
This list is not exhaustive but indicative only. Final list of drawings shall be prepared by successful bidder during detailed engineering. Bidder shall submit the qualification details of his licensed Architect & structural engineer (Approved by any Govt organization for detailed engineering/Structural design/approved by Institution of Engineers (India).

i. Design calculation, general arrangement drawings, foundation drawing & detailed erection / construction drawings including R/F drawings for Sub-Station Control Room Building.
ii. Foundation design and drawing of Cable Pot Head.
iii. Foundation design & drawing of all equipment foundations.
iv. Structural steel fabrication drawings for Cable Pot & equipment support structure.
v. Site preparation, filling up to formation level, removal of trees, if any and site cleanliness
vi. Foundation design & drawing of Power Transformer
vii. Design & drawing of transformer grating, firewall & burnt oil tank
viii. Foundation design & drawing for lighting pole.
ix. Foundation design & drawing of Capacitor bank (roof/yard as decided during engineering), Auxiliary Transformer and design of fencing for both.
x. Complete fencing along with gate for the Sub-Station yard
xi. Details of Indoor and Outdoor Cable Trenches with cable tray supports and trench covers
xii. Design & drawing of Rainwater Harvesting System, sewerage system including septic tank, water supply arrangement, landscaping, etc.
xiii. Design & drawing of roads and complete drainage system (with final connection to Rain Water Harvesting recharge pit) within Sub-Station including crossings.
xiv. Design & drawing Security room.
xv. Design & drawing NIFPS system & underground water tank.

6.0 SUB-STATION CONTROL ROOM BUILDINGS GENERAL REQUIREMENTS

6.1. General

6.1.1. The scope includes the design, engineering and construction including anti-termite treatment, plinth protection, DPC of buildings including sanitary, water supply, electrification, fire fighting system, etc. The building shall be of RCC framed structure of minimum concrete grade M25. The Sub-Station Building shall include rooms as specified below:

S. No.	Facility
i	Control & 11kV S/W Room
ii	GIS Hall
iii	Cellar floor
iv	Battery Room, Charger Room, Maintenance room and office rooms
v	Pantry
VI	Toilet (Male & Female separately)
VII	Staircase (for approach till topmost roof slab) including separate staircase for Fire-escape.
VIII	Steel staircase with all safety features for approach till mumty slab

6.1.2. Minimum floor area requirements have been given in tender drawings, which may be increased at the time of detailed engineering to suit project requirements.

6.1.3. An open space of 1200 mm minimum shall be provided on the periphery of the rows of panel and equipment generally in order to allow easy operator movement and access as well as maintenance.

6.1.4. The building shall be aesthetically designed keeping in view the surrounding landscape; proper architecture shall be used to design the exterior look and finish. The architectural drawing shall be submitted for Owner's approval.

6.1.5. Future extension of one floor shall be considered at the time of design. Any other possibility of annex building shall be taken care of while finalizing the layout of the control room building.

6.1.6. Control Room cum Administrative building shall be constructed as per the approved drawings by Owner. CPWD specification shall be followed in all the building works. The clear height of building shall be minimum 4.50 m (from Finish floor level to bottom of roof beam of First floor & Second Floor). The height of GIS hall shall be as per requirement of GIS equipment & EOT.

6.1.7. Cable cellar shall be provided in the building. The clear height of cable caller shall be minimum 3.00 m (from floor level to bottom of roof beam of Ground floor).

6.1.8. Plinth level of sub-station building shall be 750mm above the internal road. Internal road level shall be 750mm above the external main road.

6.2. Design

a) The Building shall be designed on Green Building Concept duly certified by (IGBC Green Service Building rating certification/Svagriha Certification). The design of control room building shall be such decided that's minimum one floor can be added in future.

Following parameters shall be followed: -

- To the requirements of the National Building Code of India and the standards quoted therein. The contractor shall also arrange approval of building from any local authorities such as MCD or fire officer if required so. The official fees shall be born by BRPL.

- For the specified climatic & loading conditions.
- The building shall have framed super structure.
- To adequately suit the requirements of the equipment and apparatus contained in the buildings and in all respects to be compatible with the intended use and occupancy.
- With a functional and economical space arrangement.
- To be aesthetically pleasing. Different structures shall show a uniformity and consistency in architectural design.
- To allow for easy access to equipment and maintenance of the equipment.
- With wherever required, fire retarding materials for walls, ceilings and doors which would prevent supporting or spreading of fire.
- With materials preventing dust accumulation.

b) Suitable expansion joints shall be provided in the longitudinal direction wherever necessary with provision of twin columns.

c) Individual members of the buildings frame shall be designed for the worst combination of forces such as bending moment, axial force, shear force, torsion etc.

d) Permissible stresses for different load combinations shall be taken as per relevant IS Codes.

e) The building lighting shall be designed in accordance with the requirements of relevant section.

f) The building auxiliary services like exhaust and ventilation systems, fire protection and detection systems and all other miscellaneous services shall be designed in accordance with the requirements specified in relevant section or elsewhere in the Specification for the project.

g) Two nos. of emergency exits shall be provided in the building.

6.3. Design Loads

Building structures shall be designed for the most critical combinations of dead loads, super- imposed loads, equipment loads, crane load, wind loads, seismic loads, and temperature loads Dead loads shall include the weight of structures complete with finishes, fixtures and partitions and should be taken as per IS:875. Super-imposed loads in different areas shall include live loads, minor equipment loads, cable trays, small pipe racks & hangers and erection, operation and maintenance loads. Equipment loads shall constitute, if applicable, all load of equipments to be supported on the building frame The wind loads shall be computed as per IS 875, Seismic Coefficient method shall be used for the seismic analysis as per IS 1893 with importance factor 1.5.

For crane loads an impact factor of 25% and lateral crane surge of 10% (of lifted weight + trolley weight) shall be considered in the analysis of frame according to provisions of IS : 875 (latest revision). The longitudinal crane surge shall be 5% of the static wheel load. For temperature loading, the total

temperature variation shall be considered as 2/3 of the average maximum annual variation in temperature. The average maximum annual variation in temperature for the purpose shall be taken as the difference between the mean of the daily minimum temperature during the coldest month of the year and mean of daily maximum temperature during the hottest month of the year. The structure shall be designed to withstand stresses due to 50% of the total temperature variation. Wind and Seismic forces shall not be considered to act simultaneously.

Floors/slabs shall be designed to carry loads imposed by equipment. Floors shall be designed for live loads as per relevant IS codes. Cable and piping loads shall also be considered additionally for floors where these loads are expected.

In addition, beams shall be designed for any incidental point loads to be applied at any point along the beams, the floor loads shall be subject to Owner's approval.

For consideration of loads on structures IS: 875, the following minimum superimposed live loads shall however be considered for the design.

RCC-Floor	5 KN/M2	for offices,
GIS & all Equipments Room Floor	15 KN/M2 (min)	actual requirements if higher than 15KN/M2 based on equipment weight and Layout plan
Stairs & balconies	5 KN/M2	
Chequered plate floor	4 KN/M2	

Any additional load coming in the structure shall be calculated as per IS: 875.

6.4. Submission

The following information shall be submitted for review and approval to the Owner:

a) Design criteria shall comprise the codes and standards used. Applicable climatic data including wind loads, earthquake factors, maximum and minimum temperatures applicable to the building locations, assumptions of dead and live loads, including equipment loads, impact factors, safety factors and other relevant information.

b) Structural design calculations and drawing (including construction/fabrication) for all reinforced concrete and structural steel structures.

c) Fully, dimensioned concept plan including floor plans, cross sections, longitudinal sections, elevations and perspective view of each building. These drawings shall be drawn at a scale not smaller than I : 50 and shall identify the major building components.

d) Fully dimensioned drawings showing details and sections drawn to scales of sufficient size to clearly show sizes and configuration of the building components and the relationship between them.

e) Product information of building components and materials, including walls partitions flooring ceiling, roofing, door and windows and building finishes.

f) A detailed schedule of building finishes including color schemes.

g) A door & window schedule showing door types and locations, door lock sets and latch sets and other door hardware.

h) Copy of all tests/ studies/ investigation carried out by bidder as per scope.

Approval of the above information shall be obtained before ordering materials or starting fabrication or construction as applicable.

6.5. Flooring

Flooring in various rooms of control room building shall be as per detailed schedules given in Table – 1. Pantry countertop shall be of granite stone of required specification as per direction of Engineer-In-Charge.

2. Providing and fixing Raised Access Flooring .The Access raised floor shall be heavy grade UNIFLOOR FS800H with point load of 3.6KN/over 25mm sq. and UDL of 15 KN /M2 panels manufactured from steel with lightweight cementitious core in the size 600x600x35mm.The bottom of the panel shall be embossed in hemispherical shape to give strength and flexural rigidity on the exposed surface for lifetime protection and shall be zinc whisker free. The panel has to be placed on the pedestal base plate 100x100x8mm x 25mm solid road 450mm/600MM height 75x75x4mm mm top plate made from all steel zinc plated construction. Pedestal assembly shall provide for easy adjustment of leveling and accurately align panels to ensure lateral restrain. Pedestal head shall be designed to avoid rattle or squeaks. The steel base plate of the pedestal shall be fixed on to the sub-floor with epoxy pedestal adhesive and /or mechanical fixing. An all-steel rectangular stringer system having pre punched holes at both ends to ensure correct alignment with pedestal heads be applied for maximum stability. The panel shall be finished with high abrasion anti-static HPL in size 600x600x0.9mm with beading on all sides to provide protection of edges as per Drawings and as per Manufacturers recommendations. Providing Heavy Duty Double Suction Panel Lifter is included in item. Grommets for Easy Cable Access shall be provided as per design wherever required.
600 mm Finished Floor Height (FFH)

6.6. Walls

Control room building shall be of framed superstructure. All walls shall be non-load bearing walls. Minimum thickness of walls shall be 340mm upto DPC level in cement mortar 1:4 (1 Cement: 4 Coarse sand) and 230mm above DPC level in cement mortar 1: 4 (1 Cement: 4 coarse sand). Parapet walls (Incl. s/stn building and mumty) shall be 230 mm thick and 1100mm high from top of roof treatment. 50 mm CC coping to be provided on parapet walls.

6.7. Plastering

All internal walls shall have minimum 12mm/ 15mm thick 1:4 (1 Cement : 4 coarse Sand) cement sand plaster. The ceiling shall have 6mm thick 1:3 cement sand plaster.

6.8. Finishing

All external surfaces (S/stn building, boundary wall and other structures) shall have Texture finish of Make UTTPL (Ultratech Texture Paints Pvt. LTD) as per below detail:

- Building area: GRANITE ATELOI SA – 36-50% LIGHT
- Beam/ column: GRANITE ATELIO SA – PINK

Granito Attiloe:
Application Process:
Thickness 1.5- 1.8mm
1. Applying Priming coat of acrylic Primer mixed with wall sealer & water in the ratio of (1:1).
2. Repair check of plaster surface with Exterior grade cement mixed with Primer. (Whereas cement is provided by client on FOC basis).
3. First coat to obtain highly dense smooth appearance of 0.5 to .7 mm thick by applying over the primer to be applied with spray / trowel depends upon the
surface.
4. Second coat of 100% natural crushed granite material 0.8 to .9 mm thick by applying a
spray gun with a pressure of 2bhp to achieve desired finish.
5. Two coat of water base Protective.

6.9. False Ceiling

a) Providing and fixing false ceiling at all height including providing and fixing of frame work made of special sections, power pressed from M.S. sheets and galvanized with zinc coating of 120 gms/sqm (both side inclusive) as per IS : 277 and consisting of angle cleats of size 50mm length x 50 mm wide x 3.0 mm thick with flanges of at 1200 mm centre to centre, one flange fixed to the steel truss members and other flange of cleat fixed to the angle hangers of 50x50x3 mm of required length with nuts & bolts of required size and other end of angle hanger fixed with intermediate G.I. channels 45x15x0.9 mm running at the spacing of 1200 mm centre to centre, to which the ceiling section 0.5 mm thick bottom wedge of 80 mm with tapered flanges of 26 mm each having lips of 10.5 mm, at 450 mm centre to centre, shall be fixed in a direction perpendicular to G.I. intermediate channel with connecting clips made out of 2.64 mm dia x 230 mm long G.I. wire at every junction, including fixing perimeter channels 0.5 mm thick 27 mm high having flanges of 20 mm and 30 mm long, the perimeter of ceiling fixed to wall/partition with the help of rawl plugs at 450 mm centre, with 25mm long dry wall screws @ 230 mm interval, including fixing of gypsum board to ceiling section and perimeter channel with the help of dry wall screws of size 3.5 x 25 mm at 230 mm c/c, including jointing and finishing to a flush finish of tapered and square edges of the board with recommended jointing compound , jointing tapes , finishing with jointing compound in 3 layers covering upto 150 mm on both sides of joint and two coats of primer suitable for board, all as per manufacturer's specification and also including the cost of making openings for light fittings, grills, diffusers, cutouts made with frame of perimeter channels suitably fixed, all complete as per drawings, specification and direction of the Engineer in Charge .
12.0 mm thick tapered edge calcium silicate board is to be provided.(In control Room)

b) False ceiling in armstrong fine fissured butt edge tiles 595x595mm : Providing & fixing of armstrong fine fissured butt edge tile ceiling complete in all respects using armstrong channels, hangers etc. Item complete with all edge cut tiles and required cutting for lights, speakers, detectors, diffures, etc. Tile code-Armstrong fine fissured NF Butt edge (RH 99E)

c) False ceiling in gypsum board : P/F false ceiling, drops, ceiling " design in gypsum board. Providing and fixing at all heights false ceiling of 12.5MM thick tapered edge gypsum board confirming to IS: 2095 including providing and fixing of frame work made of special sections power pressed from MS Sheet and galvanized in accordance with Zinc coating 600 as per IS: 277 and consisting of angel cleats of size 25mm wide X 16mm thick with flanges of 22mm and 37mm at 1200 center to center one flange fixed to the ceiling with dash fastener 12.5mm DIA 40mm

6.10. Doors, Windows and ventilators

The details of doors and windows of the sub-station building shall be as under:

.

a) Steel door: Steel doors with Door Frames made with 1.5 mm (16 gauge) thick galvanized steel sheet pressed multi bend to S/L Rebate of Size 120 x 60 mm and Door Shutter shall be made with 18 gauge thick GI sheet pressed formed to provide a 46 mm thick fully flushed Door leaf skin panel shell with lock seam joint at stile edges and filled with Honey comb structure with metallic reinforcement at top, bottom and side surroundings. The item also includes the provision for required iron mongery and Powder coated Finish in RAL Color shades.
Each door leaf with 4 hinges (Make- Dauerhaft/ Hafele/ Equivalent), 1 no.of Door closure (make- Dauerhaft/ Hafele/ Equivalent), 1 no. of external trim (make- Dauerhaft/ Hafele/ Equivalent), , 1 no. Three Point Panic Bar (Make-Dauerhaft / Hafele/ equivalent) with necessary screws etc all complete.

b) Fire proof doors: Providing and fixing of Hollow metal fire rated doors as per IS 3614 part-1 & part-2 for stability and integrity. Pressed Galvanized steel confirming to IS 277 with the following specification. Recommended fire door should have been tested earlier of similar design at CBRI for maximum rating of 2hrs tested with vision panel of minimum 0.1 Sqmtr per shutter as requirement & application. Individual Test certificates should also be available for glass used in vision lites confirming the required fire ratings /panels being a part of the fire door assembly. Doors should be finished in Thermosetting Powder Coating desired RAL Shades. Manufacturer test certificate shall cover doors both single & double leaf doors and Hardwares should pass European certificate "CE" of conformity / UL with required fire ratings. Any deviation in specification and sheet thickness other than what is mentioned in the test certificates are not allowed. Proper label confirming the type of door and the hourly rating is mandatory. The manufacturer should be compliant to ISO 9001: 2008 and CE certified, manufacturer should be covered under IGBC scheme. Door frame shall be double rebate profile of minimum size 154mm X 77 mm made out of 1.60mm (16gauge) minimum thick galvanized steel sheet. NDRF 154x77 Frames shall be Butt jointed and field assembled with self bolted. The frames should be finished with Thermosetting Powder Coating in desired RAL Shade. All provision should be mortised, drilled and tapped for receiving appropriate hardware. Frames should be provided with back plate bracket and anchor fasteners for installation on a finished plastered masonry wall opening.
Door leaf shall be minimum 49mm thick fully flush double skin door with or without vision lite. Door leaf shall be manufactured from 1.25mm (18guage) minimum thick galvanised steel sheet. The internal construction of the door should be rigid reinforcement pads for receiving appropriate hardware. The infill material shall be Rockwool treated with Viper FRS 881 LH. All

doors NSD 12049 shall be factory prepped for receiving appropriate hardware and provided with necessary reinforcement for hinges, locks, and door closers. The edges should be interlocked with a bending radius of 1.4mm. For pair of doors astragals has to be provided on the meeting stile for both active and inactive leaf. Vision lite wherever applicable should be provided as per manufacturers recommendation with a beeding and screws from inside. However the glass should be contraflam Door Lite 11 mm clear 120 min fire rated and partially insulated (EW120), Non Wired Toughened, interlatered glass having a sound reduction of >37dB, LT of 86% and compliant to class 2(B)2 category of Impact Resistance as per EN 12600 standard from Saint Gobain.
Each door leaf with 4 hinges (Make- Dauerhaft/ Hafele/ Equivalent), 1 no.of fire rated Door closure (make- Dauerhaft/ Hafele/ Equivalent), 1 no. of external trim (make- Dauerhaft/ Hafele/ Equivalent), 1 Fire Rated Wired Glass(200x300mm), (Make-Pilkington/ equivalent), 1 no. Three Point Panic Bar (Make-Dauerhaft / Hafele/ equivalent) with necessary screws

c) Aluminium Doors, Windows & Ventilators: Aluminium doors, Windows & Ventilators are Powder coated Aluminium Hindalco/ Jindal or equivalent extruded sections (minimum 3.0 mm thick) as per IS 733 & 1285 for windows and ventilators (minimum thickness of powder coating 50 micron of approved colour). Glazing for windows and ventilators will be hermetically sealed double glazing (DGU) with (6+12+6) i.e. 06 mm clear toughened glass +12 mm air gap + 6 mm toughened Glass (Heat reflective colour glass).

Door/ Window frame	101.60x44.50x3.18mm Code: 20011(Jindal)
Door/ Window Shutter	83.50x44.45x3.18mm Code: 19583 (Jindal)
Door/Windows middle section	83.50x44.45x3.27mm Code: 19593 (Jindal)
Square Tube Inside window Beading	25x25x2mm
Beading in Doors	Code: 19377 (Jindal)
Ventilator frame	101.60x44.50x3.18mm Code: 20011(Jindal)
Ventilator Middle frame	101.60x44.50x3.18mm Code: 20010 (Jindal)
Ventilator outerside beading Angle	35x35x2mm
Square Tube Inside ventilator Beading	25x25x2mm

d) Doors in various rooms of control room building shall be as per detailed schedules given in Table – 1. All entrance doors at ground floor/ cellar shall be steel doors. Partition door between adjacent panel rooms shall be 2 hours fire rated

e) The details for all other doors and windows shall be as per finish schedule Table-I and tender Drawings with the relevant IS code.

f) Floor springs and hydraulic door closer of make Dorma or equivalent to be provided.

g) To maintain proper size of opening for doors and windows, contractor shall provide rough round Aluminum tube of size 40 x 20 mm around all opening before plaster work.

h)The contractor shall provide a door and window sill of granite stone of size 18-20 mm.

i) All windows at ground floor/ cellar shall be provided with MS Grill.

6.11. Internal Electrification

Electrical wiring shall be through heavy duty concealed conduits. All fixtures and wiring shall be of best quality and ISI marked. (Fixtures shall be provided as per provision of energy conservation act). Internal wiring shall include all fittings and fixtures, control panel boards, main switch MCB's, etc.

6.12. Plumbing & Sanitation

a) All plumbing and sanitation works shall be executed to comply with the requirements of the appropriate bye-laws, rules and regulations of the Local Authority having jurisdiction over such matters. The Contractor shall arrange for all necessary formalities to be met in regard to inspection, testing, obtaining approval and giving notices etc.

b) PVC sintex or equivalent make Roof water tank of adequate capacity depending on the number of users for 24 hours storage shall be provided. Minimum 2 Nos. 1000 liters capacity shall be provided.

c) CPVC pipes & Fittings shall be used for internal & external piping (both concealed) work for potable water supply.

d) UPVC pipes shall be used for sanitary works above ground level.

e) Each toilet shall have minimum fittings

i) Wall Hung Water closet (European type W.C. pan) Jaquar/Kohler as per approval of Engineer In charge

ii) Half Stall Urinal (580 x 380 x 350 mm) Jaquar/Kohler as per approval of Engineer Incharge

iii) Counter top Wash basin (630 x 450 mm) Jaquar/Kohler as per approval of Engineer Incharge

iv) Bathroom mirror (600 x 450 x 6 mm thick) hard board backing

v) CP brass towel rail (600 x 20 mm) with C. P. brass brackets.

vi) Soap holder and liquid soap dispenser.

f) Water cooler for drinking water with adequate water storage facility shall be provided and located near control room instead of near toilet block.

g) 1 No stainless steel A ISI 304(18/8) kitchen sink with Drain board (510 x 1040 x 225mm bowl depth as per IS 13893 for pantry shall be provided complete with all fittings

h) All fittings, fastener, grating shall be chromium plated.

i) All sanitary fixtures and fittings shall be of approved quality and type manufactured by well known manufacturers. All items brought to site must bear identification marks of the type of the Manufacturer.

j) Soil, waste and drain pipes, for underground works shall be UPVC Pipes for areas not subject to traffic load. Heavy-duty cast iron pipes/ RCC NP-04 Pipes shall be used otherwise.

7.0 STORM WATER DRAINAGE FOR CONTROL ROOM BUILDING

The building drain shall be provided for the collection of storm water from the roofs. This water shall be collected in chambers and these chambers shall drain to the main drainage system of the station which shall in turn be connected to rain water harvesting recharge pits. Overflow of RWH Pits shall be connected to main drain

G.I Pipes of 150 MM dia rain water down comers shall be provided to drain off the rain water from the roof.. The number and size of down comers shall be governed by IS:1742 and IS:2527. Pipe will be covered by making suitable arrangement in structure and to be matched with external Finishes.

All external drains shall be covered with precast perforated RCC covers of suitable size and thickness.

For all buildings, suitable arrangement for draining out water collected from equipment blow down, leakages, floor washings fire fighting etc. shall be provided for each floor.

8.0 DEVELOPMENT OF YARD

8.1. Scope

8.1.1. The Contractor shall furnish all labour, equipments and materials required for complete performance of the work in accordance with the drawings, specifications and direction of the Owner.

8.1.2. Stone spreading shall be done in the Outdoor Sub-Station Yard area, Power Transformer, Capacitor Bank and wherever equipments and structures are to be provided under the present scope of work.

General Requirement:

The material required for site surfacing / stone filling shall be free from all types of organic materials and shall be of standard quality and as approved by the Owner.

Test for aggregates should be as follows:

a) Sieve Analysis limits (Gradation)

As per IS: 383-1970

The material to be used for stone filling / site surfacing shall be uncrushed / crushed / broken stone of 20 mm nominal size (ungraded single size) conforming to Table 2 of IS:383 - 1970.

Sieve Analysis (Gradation):
(IS: 383 - Table - 2)

Sieve size	% passing by weight
40mm	100
20mm	85-100
10mm	0 – 20
4.75mm	0-5

One test shall be conducted for every 50 cum.

b) Hardness:

Abrasion value (IS: 2386 Part-IV) - not more than 40%
Impact value (IS: 2386 Part-IV) - not more than 30% and frequency shall be one test per 50 cum with a minimum of one test per source

c) Flakiness Index

As per IS: 2386 Part I

8.1.3. Before taking up the final yard treatment, anti-weed treatment shall be applied in the switchyard area wherever yard treatment is to be done, and the area shall be thoroughly de-weeded including removal of roots. The recommendation of local agriculture or horticulture department shall be sought wherever feasible while choosing the type of chemical to be used. Nevertheless the effectiveness of the chemical shall be demonstrated by the contractor in a test area of 10M x 10M (approx.) and monitored over a period of two to three weeks by the Engineer-in-Charge. The final approval shall be given by Engineer-in-Charge and final approval given based on the results.

8.1.4. The anti-weed chemical shall be procured from reputed manufacturers. The dosage and application of chemical shall be strictly followed as per manufacturer's recommendation. The contractor shall be required to maintain the area free of weeds for a period of 1 year from the date of application of 1st dose of anti-weed chemicals

8.1.5. After all the structures/equipments are erected and anti-weed treatment is complete, the surface of the substation area shall be maintained, rolled/compacted to the lines and grades as decided by Engineer-in-Charge. De-weeding including removal of roots shall be done before rolling is commenced. Engineer-in-Charge shall decide final formation level so as to ensure that the site appears uniform free from undulations. The final formation level shall however be very close to the formation level using manual or machine roller with suitable water sprinkling arrangement to form a smooth and compact surface.

8.1.6. After anti-weed treatment & compaction of earth, final yard treatment shall be Carried out in the 4 layers as follows:

a. Providing and laying in position 75mm thick base layer of cement concrete 1:5:10 (1 cement: 5 coarse sand : 10 brick aggregate 40mm nominal size).

b. Flat brick flooring with over burnt bricks /class designation 100 as per approval of BRPL on the bed of 12 mm thick cement mortar 1:6 (1 cement : 6 coarse Sand) and filling the joints 12mm thick all around the bricks with same mortar.

c. Over the flat brick flooring a layer a final surface course of minimum 100 mm thickness of 20 mm nominal size (single size ungraded) broken stone shall be spread and uniformly leveled.

8.1.7. In areas that are considered by the Engineer-in-Charge to be too congested with foundations and structures for proper rolling of the site surfacing material by normal rolling equipments i.e., clear space between any 02 adjacent structures/foundation less than 01 meter, these adjoining structures/foundations shall constructed as a monolithic structure.

8.1.8. The sub grade shall be in moist condition at the time the cement concrete is placed. If necessary, it should be saturated with water for not less than 6 hours but not exceeding 20 hours before placing of cement concrete. If it becomes dry prior to the actual placing of cement concrete, it shall be sprinkled with water and it shall be ensured that no pools of water or soft patches are formed on the surface.

9.0 SUB-STATION TRENCHES

9.1. The cable trenches and precast removable RCC cover (with lifting arrangement) shall be constructed using RCC of minimum grade M25.

9.2. The RCC cable trench walls and raft shall not be less than 150 mm thick.

9.3. The cable trench wall shall be designed for the following loads.

- Dead load of 155 kg/m length of cable support + 75 Kg on one tier at the end.(Wall thickness Minimum-150 mm)
- Triangular earth pressure + uniform surcharge pressure of 2T/m2.

9.4. Cable trench covers shall be 50 mm thick. All trench covers/ drain covers shall have desired IRC Mesh of size 75x25mm (wire size 6 gauge/ 7.75 kg/m2) welded to M.S. frame of angle 50 x 50 x 6 mm all round the cover. Size of covers shall be as per site requirement / direction of Engineer in Charge.

9.5. Size of covers shall be per site requirement / direction of Engineer In Charge.

9.6. All cable trenches inside the buildings shall have covers comprising of 6 mm thick chequered plates fixed on angle 40 x 40 x 5 mm frame with arrangement of MS holes for lifting of cover.

9.7. Cable trench crossing the road/rails shall be designed for class AA loading of IRC/relevant IS Code and should be checked for transformer/reactor loading.

9.8. Trenches shall be drained. Necessary sumps be constructed and submersible sump pumps with stand by arrangement shall be supplied/ installed. Cable trenches shall not be used as storm water drains.

9.9. The top of cable trench shall be such that the surface rain water does not enter the trench.

9.10. All metal parts inside the trench shall be connected to the earthing system.

9.11. The trench bed shall have a perpendicular to the run. Trench wall shall not foul with the foundation. Suitable clear gap shall be provided.

9.12. The trench bed shall have a slope of 1/500 along the run & 1/250 perpendicular to the run.

9.13. All the construction joints of cable trenches i.e. between base slab to base slab and the junction of vertical wall to base slab as well as from vertical wall to wall and all the expansion, joints shall be provided with approved quality PVC water stops of approx. 230 x 5 mm size for those sections where the ground water table is expected to rise above the junction of base slab and vertical wall of cable trenches.

9.14. Cable trenches shall be blocked at the ends if required with brick masonry in cement sand mortar 1:6

and plaster with 12mm/15mm thick 1:4 cement sand mortar.

9.15. Construction of Cable Trench 11Kv & 66Kv upto the plot boundary wall shall be in the scope of Vendor.

10.0 SUB-STATION DRAINAGE SYSTEM

Adequate site drainage system shall be provided by the Contractor. The Contractor shall design the storm water drainage system covering all culverts, ditches, drains, etc. The run off shall be calculated on the basis of maximum rainfall intensity that is likely to occur over the catchment area in one hour period on an average of once in ten years. The surface of the site shall be sloped to prevent the ponding of water. Outfall of drainage shall be suitably connected to rainwater harvesting recharge pits. While designing the drainage system following points shall be taken care of:

1. The maximum velocity for pipe drains and open drains shall be limited to 2.4m/sec and 1.8m/sec respectively. However, minimum non-silting velocity of 0.6m/sec shall be ensured. Longitudinal bed slope not milder than 1 in 1000 shall be provided.

2. For design of RCC pipes for drains and culverts, IS: 456 and IS: 783 shall be followed.

3. The Contractor shall ensure that water drains are away from the site area and shall prevent damage to adjacent property by this water. Adequate protection shall be given to site surfaces, roads, ditches, culverts, etc. to prevent erosion of material by water.

4. For pipe drains, concrete pipe of class NP3 shall be used. However, for road crossings etc. higher strength pipe of class NP4 shall be provided. For rail crossings, pipes conforming to railway loading standards or at least NP4 class shall be provided. Manholes shall be provided at every 30m interval, at connection points and at every change of alignment.

5. Pipe drains shall be connected through manholes at an interval of maximum 15mtrs. Effluents shall be suitably treated by the Contractor to meet all the prevalent statutory requirements and local pollution control norms and treated effluents shall be conveyed to the storm water drainage system at a suitable location for its final disposal.

6. All internal site drainage system, including the final connection/disposal to rainwater harvesting recharge pits shall be part of Contractor's scope including all required civil work, mechanical & electrical systems. The Contractor shall connect drain(s) at one or more points to rainwater harvesting recharge pits as feasible at site. The drainage layout of the substation shall be approved by the Owner & all works shall be carried out by the Contractor.

7. The drainage scheme and associated drawings shall be got approved from the Owner.

11.0 SUB-STATION ROAD

11.1. Inside substation roads to be provided for access along with car parking for at least three cars and two wheeler parking for three vehicles. Building, Roads and parking are in the scope of bidder. Layout of the roads shall be based on layout drawing for the substation. Parking areas shall be provided for Site personnel and visitors as per layout drawing. Adequate turning space for vehicles shall be provided and bend radius shall be set accordingly. It has to be connected suitably with roads.

11.2. All substation roads shall be constructed so as to permit transportation of all heavy equipment up to 60MT. The main approach roads upto Control Room Building and other relevant roads will be RCC/ Cement Concrete Roads. The other connecting roads and pathways shall be of Paver blocks/ CC Road as per site requirement. The pavers blocks used for the roads shall be minimum 80mm thick with compressive strength not less than 450Kg/cm2.

11.3. Road construction shall be as per IRC standard.

11.4. Adequate provision shall be made for road drainage.

11.5. All the culverts and its allied structure (required for road/rail, drain trench crossings etc.) shall be designed for class AA loading as per IRC standard/IS code.

TRANSFORMER FOUNDATION, RAIL TRACK/ ROAD CUM RAIL TRACK

11.6. The Contractor shall provide a permanent transfer track system integrated with the power transformer foundation to enable installation and replacement of any failed unit by the spare unit located at the site. The transfer track system shall be suitable to permit the movement of any failed unit fully assembled with integral radiators and oil, without the de-energization of any other equipment in the station. This system shall enable the removal of any failed unit from its foundation to a repair area and the installation of the spare unit. This system, preferably, shall not interfere with the normal internal road and trench system. If trench/ drain crossings are required then suitable RCC culverts shall be provided in accordance with I.R.C Code/ relevant IS.

11.7. Rail track to be provided for all PTR foundations upto Grid Main Entry gate and shall be minimum of RCC M-25 grade. The space between the tracks shall be suitably filled with Concrete M-25. up to the formation level.. Suitable drainage system between the tracks shall be provided.

11.8. The rails shall be of first quality 52 kg/m medium manganese steel as per Indian Railway specification T-12-64 and its subsequent revision, joined together by fish plates as per Indian Railway specification T-1/57 and their drawing no. 090M and 27mm diameter fish bolts. No joint shall be provided at less than L/3 of the longest part.

11.9. The grating shall be made of MS flat of size 50mmx 5mm placed at 30mm center to center welded inclined (sideways) at an angle of 45-60 degrees from horizontal axis and 25mmx5mm MS flat at a spacing of 150mm at right angle to each other. Maximum length of grating shall be 1500mm and width shall not be more than 500mm. The gratings supported on ISMB 150mm shall be placed at the formation level and will be covered with 100mm thick layer of broken/crushed/non-crushed stone having size 40mm to 60mm which acts as an extinguisher for flaming oil.

12.0 OIL RECOVERY & BURNT OIL TANK

12.1. The oil recovery system shall be provided for all transformers (containing insulating oil or any flammable or polluting liquid) in order to avoid spread of fire by the oil and for environmental protection.

12.2. Each transformer including oil conservator tank and cooler banks etc. shall be placed in a transformer pit surrounded by retaining walls (pit walls). The clear distance of the retaining wall from the

transformer shall be 20% of the transformer height or 0.8m whichever is more. The transformer pit thus formed shall have a capacity equal to volume of oil in the transformers. The MS grating placed at the formation level shall be covered with 100mm thick gravel of 40mm nominal size which acts as an extinguisher for flaming oil.

12.3. Each transformer pit shall be drained towards a sump pit whose role is to recover the infiltrating water and the drained oil from the pit. The sump pit shall have sufficient capacity to receive without overflowing the oil content of large transformers plus the water content of any fixed fire fighting system and a certain quantity of rain water collected from the pit connected to it. The system shall be provided with air vents large enough to avoid over- pressure during operation. The whole internal surface of the sump pit should be impermeable.

12.4. The retaining walls which make up the transformer pit shall be made of reinforced cement concrete, with minimum grade of concrete as M-25.

12.5. The floor of the transformer pit shall be of Reinforced cement concrete of grade M25.

12.6. A Device showing level of sump pit shall be fitted along with the automatic submersible pumping system, which shall have sufficient capacity to evacuate the fire fighting & rainwater from the sump pit..

12.7. If the heights of the retaining wall which form the transformer pit exceed 60cm, steps shall be provided to facilitate access to the transformer and reactor.

12.8. When designing the transformer pit, the movement of the transformer must be taken into account.

12.9. It must be assured that the coefficient of crushed stone (granular material) penetration which fills the transformer pit will be retained regardless of the climatic conditions.

13.0 FIRE PROTECTION WALLS

13.1. General

13.1.1. Fire protection walls shall be provided, wherever required, in accordance with Tariff Advisory Committee (TAC) and certifying all mandatory safety clearances.

13.2. Material

13.2.1. The firewall shall be made up of reinforced cement concrete (at least M-25 grade) as per the system requirements. Materials used must conform to the standards of the National Fire Prevention Association & TAC Norms.

13.3. Fire Resistance

13.3.1. The firewall shall have a minimum fire resistance of 3 hours. The partitions, which are made to reduce the noise level of the transformers, shall have the same fire resistance where the partitions are also used as firewalls. The walls of the building, which are used as firewalls, shall also have a minimum fire resistance of 3 hours.

13.3.2. The firewall shall be designed to protect against the effect of radiant heat and flying debris from an adjacent fire.

13.4. Dimensions

13.4.1. The barrier shall extend at least 500 mm above the transformer bushing and pressure relief vent and length wise 600 mm beyond the transformer including any radiators and tap changer enclosure.

13.4.2. These dimensions might be reduced in special cases, as per the approval of owner where there is lack of space. A minimum of 2.0 meter clearance shall be provided between the Equipments e.g. Autotransformer/Power transformer.

13.4.3. The building walls, which act as firewalls, shall extend at least 1 m above the roof in order to protect it. Building wall adjacent to transformer shall act as fire resistance wall and shall be made up of solid concrete blocks

13.5. Mechanical Resistance

13.5.1. The firewall shall have the mechanical resistance to withstand local atmosphere conditions. If this wall shall serve as a support for equipment such as insulators etc, it mechanical rigidity must be increased. Connecting the walls by steel or other structures which may produce a reversing torque if overheated shall be avoided.

14.0 DESIGN CONSIDERATION FOR FOUNDATION

14.1. General

14.1.1. Work covered under this Clause of the Specification comprises the design and construction of foundations and other RCC constructions for switchyard structures, equipment supports, trenches, drains, jacking pad, pulling block, control cubicles, bus supports, Power transformer/Reactors, marshalling kiosks and auxiliary equipments, tanks or for any other equipment or service and any other foundation required to complete the work. This clause is as well applicable to the other RCC constructions.

14.1.2. Concrete shall conform to the requirements mentioned in IS: 456 and all the tests shall be conducted as per relevant Indian Standard Codes as mentioned in Standard field quality plan appended with the specification. A minimum grade of M25 concrete shall be used for all structural/load bearing members as per latest IS: 456 (latest revision).

14.1.3. If the site is sloppy, the foundation height will be adjusted to maintain the exact level of the top of structures to compensate such slopes.

14.1.4. The switchyard foundation's plinths shall be minimum 300mm above finished yard level.

14.1.5. Minimum 100mm thick lean concrete (1:4:8) shall be provided below all underground structures, foundations, trenches etc. to provide a base for construction.

14.1.6. Concrete made with Ordinary Portland cement shall be carefully cured and special importance shall be given during the placing of concrete and removal of shuttering.

14.1.7. The design and detailing of foundations shall be done based on the approved soil data and sub-soil conditions as well as for all possible critical loads and the combinations thereof. The Spread footing or pile foundation as may be required based on soil/sub-soil conditions and

superimposed loads shall be provided.

14.1.8. If pile foundations are adopted, the same shall be cast-in-situ driven/bored or precast or under reamed type as per relevant. parts of IS Code 2911. Only RCC piles shall be provided. Suitability of the adopted pile foundations shall be justified by way of full design calculations. Detailed design calculations shall be submitted by the bidder showing complete details of piles/pile groups proposed to be used. Necessary initial load test shall also be carried out by the bidder at their cost to establish the piles design capacity. Only after the design capacities of piles have been established, the Contractor shall take up the job of piling. Routine tests for the piles shall also be conducted. All the work (design & testing) shall be planned in such a way that these shall not cause any delay in project completion. The contractor shall go for vertical load testing or lateral load testing. The contractor may choose static or dynamic load testing upon site condition and time constraint.

14.2. Design

14.2.1. All foundation shall be of reinforced cement concrete. The design and construction of RCC structures shall be carried out as per IS: 456 and minimum grade of concrete shall be M-25.

14.2.2. Limit state method of design shall be adopted unless specified otherwise in the specification.

14.2.3. For detailing of reinforcement IS: 2502 and SP: 16 shall be followed. TMT bars conforming to IS: 1786 shall be used as reinforcement. However, in specific areas mild steel (Grade I) conforming to IS: 432 can also be used. Two layers of reinforcement (on inner and outer face) shall be provided for wall & slab sections having thickness of 125 mm and above. For footings minimum cover shall be 50 mm.

14.2.4. RCC water retaining structures like storage tanks, etc. shall be designed as uncracked section in accordance with IS: 3370 (Part I to IV) by working stress method. However, water channels shall be designed as cracked section with limited steel stresses as per IS: 3370 (Part I to IV) by working stress method. Joints on each concrete lift shall be provided with approved quality PVC water stops of approx. 230 x 5 mm size to avoid water seepage through those joints

14.2.5. The procedure used for the design of the foundations shall be the most critical loading combination of the steel structure and or equipment and/or superstructure and other conditions, which produces the maximum stresses in the foundation or the foundation component and as per the relevant IS Codes of foundation design. Detailed design calculations shall be submitted by the bidder showing complete details of piles/pile groups proposed to be used.

14.2.6. Design shall consider any sub-soil water pressure that may be encountered following relevant standard strictly.

14.2.7. Necessary protection to the foundation work. If required shall be provided to take care of any special requirements for aggressive alkaline soil. Black cotton soil or any other type of soil which is detrimental / harmful to the concrete foundations.

14.2.8. RCC columns shall be provided with rigid connection at the base. All columns shall be interconnected with RCC beams at Footing Level from all possible Directions/Suitable size

raft footing will be provided.

14.2.9. All sub-structures shall be checked for sliding and overturning stability during both construction and operating conditions for various combinations of loads. Factor of safety for these cases shall be taken as mentioned in relevant IS Codes as stipulated elsewhere in the Specifications. For checking against overturning, weight of soil vertically above footing shall be taken and inverted frustum of pyramid of earth on the foundation should not be considered.

14.2.10. Earth pressure for all underground structures shall be calculated using coefficient of earth pressure at rest. Co-efficient of active or passive earth pressure (whichever is applicable). However, for the design of substructures of any underground enclosures, earth pressure at rest shall be considered.

14.2.11. In addition to earth pressure and ground water pressure etc., a surcharge load of 2T/Sq.m shall also be considered for the design of all underground structures including channels, sumps, tanks, trenches, and substructure of any underground hollow enclosure etc, for the vehicular traffic in the vicinity of the structure.

14.2.12. Following conditions shall be considered for the design of water tank in pumps house, channels, sumps, trenches and other underground structures:

a) Full water pressure from inside and no earth pressure, ground water pressure & surcharge pressure from outside (application only to structures, which are liable to be filled up with water or any other liquid).

b) Full earth pressure, surcharge pressure and ground water pressure from outside and no water pressure from inside.

c) Design shall also be checked against buoyancy due to the ground water during construction and maintenance stages. Minimum factor of safety of 1.5 against buoyancy shall be ensured ignoring the superimposed loadings.

14.2.13. Base slab of any underground enclosure shall also be designed for empty condition during construction and maintenance stages with maximum groundwater table (GWT). Minimum factor of safety of 1.5 against buoyancy shall be ensured ignoring the super-imposed loadings.

14.2.14. Base slab of any underground enclosure like water storage tank shall also be designed for the condition of different combination of pump sumps being empty during maintenance stages with maximum GWT. Intermediate dividing piers of such enclosures shall be designed considering water in one pump sump only and the other pumps sump being empty for maintenance.

14.2.15. The foundations shall be proportioned so that the estimated total and differential movements of the foundations are not greater than the movements that the structure or equipment is designed to accommodate.

14.2.16. The foundations of transformer shall be of block type foundation. Minimum reinforcement shall be governed by IS: 2974 and IS: 456.

14.2.17. The equipment foundations shall be checked for a factor of safety of 2.2 for normal condition and 1.65 for short circuit condition against sliding, overturning and pullout. The same factors shall be used as partial safety factor over loads in limit state design also.

14.3. Admixture & Additives

14.3.1. Only approved admixtures shall be used in the concrete for the Works. When more than one admixture is to be used, each admixture shall be batched in its own batch and added to the mixing water separately before discharging into the mixer. Admixtures shall be delivered in suitably labeled containers to enable identification.

14.3.2. Admixtures in concrete shall conform to IS: 9103. The waterproofing cement additives shall conform to IS: 2645. Owner shall approve concrete Admixtures/ Additives.

14.3.3. The contractor may propose and the Owner may improve the use of a water-reducing set-retarding admixture in some of the concrete. The use of such an admixture will not be approved to overcome problems associated with inadequate concrete plant capacity or improperly planned placing operation sand shall only be approved as an aid to overcoming unusual circumstances and placing conditions.

14.3.4. The water-reducing set-retarding admixture shall be an approved brand of Ligno-sulphonate type admixture.

14.3.5. The waterproofing cement additives shall be used as required/advised by the Owner.

14.3.6. Water proofing treatment on roof shall be as per Item No 22.7.1 - DSR 2012.

15.0 FENCING OF SUB-STATION (LIVE PART) AREA

15.1. General

Fencing shall be designed for the most critical loading combination taking care of wind force, stability, tension on wires, minimum requirements as per this clause for are materials IS 8910 and fabrication IS 800 as per recommendations

15.2. Areas Requiring Fencing

15.3. Fencing shall be providing for the following areas:

15.3.1. Site fencing for the complete Outdoor substation Yard area including Power transformer area. Gates shall be provided for men and machine / equipment to be taken out of the substation.

15.3.2. The IRC weld mesh Panels fencing of Capacitor Bank with roof cover (as per approved BRPL pattern).

15.3.3. Fencing of Aux. Substation Transformer (as per approved BRPL pattern).

15.4. Product Material

15.4.1. The minimum requirements are as follows:

IRC Weld Mesh fencing in accordance to relevant IS Code

- Size of IRC mesh — 25X75mm
- Nominal wire size — 6 gauge/ 7.75 kg/m2
- Width of fencing panel — 2400mm
- Height of fencing — 2000mm
- Fabrication of panels — 40mm Nominal bore M.S. Pipe (medium duty). Providing elbow/bend at corners & 40 x 5 mm M.S. flats in beading
- Paint — Aluminum Paint

15.4.2. Posts

- Intermediate Straining Post : 65mm Nominal bore, M.S. Pipe (Medium duty)
- Base Plate : 12mm M.S. Plate with 4 nos of hole. Nuts & bolts of suitable diameter.
- Paint : shall be painted with a coat of approved steel primer and two coats of synthetic enamel paint

The IRC weld mesh Panels shall be fixed to the post at the top and bottom of the 65mm Nominal bore, M.S. Pipe by Nuts and bolts. The Intermediate straining Posts to be erected by using holding down bolts and nuts grouted in toe wall around the Yard (the height of Yard) Posts shall be set in 1:1.5:3 Reinforced cement concrete blocks of minimum dimension (340 mm x 340 mm x 750 mm deep) and Toe wall to be at least 450 mm below & 450 mm above the yard level and 340 mm wide matched with External facade of the building(Grit-wash).

15.5. Installation

15.5.1. Fence shall be installed along switchyard line.

15.5.2. Post holes shall be excavated by approved methods.

15.5.3. Intermediate posts shall be spaced 2.5 m apart measured parallel to ground surface.

15.5.4. Concrete work shall conform to relevant clause. Post shall be braced and held in plumb position and true alignment and elevation until concrete has set.

15.5.5. Fence fabric shall not be installed until concrete has cured a minimum of 7 days.

15.5.6. Bottom and top of the fence panels shall be fixed with post by MS flats of 50 mm x 6 mm (min).

15.6. Toe wall of Brick masonry, 345 mm thk, with notches over 100 mm thick PCC (1:4:8) shall be provided below all fencing and shall be minimum 450 mm above and 450 mm below finished ground level. All exposed surfaces of brick toe wall shall be finished with Grit plaster/Matched with Building façade.

15.7. M.S. Gate

15.7.1. M.S. Gate of 6.0 m wide x 2.3 m height (2 nos) and 1.55 m x 2.3 m height (1 no) shall be provided to provide access through the fencing to the yard. M.S. Gate of 6.0 m wide x 2.3 m height shall be made in two leaf and 1.55 m x 2.3 m height shall be made in one leaf with locking arrangements. The gate shall be made with outer frame of 40 NB (Medium) M. S. Pipe. Weld mesh of opening size 25 x 75 mm and nominal wire size of mesh is 6 gauge/ 7.75 kg/m2 (as per standard approved drawing of BSES).

15.7.2. Hinges, al-drops and other accessories shall be provided for effective working of the gate.

16.0 GATES

16.1. The gates shall be fabricated with welded joints to achieve rigid connections. The gate frames shall be painted with one or more coat of approved steel primmer and two coats of synthetic enamel paint.

16.2. Gates shall be fitted with approved quality iron hinges. Hinges shall permit gates to swing through 180 degree.

16.3. Gates shall be fitted with galvanized chain hook or gate hold back to hold gates open. Double gates shall be fitted with centre rest and drop bolt to secure gates in closed position.

16.4. Main Gate shall be at least 6m wide. Gates shall be installed in locations shown on drawings. Next to the main gate, a small gate (1.25 m wide, single leaf) within main gate shall also be provided as a wicket gate.

16.5. Bottom of main gates (both at entry and exit) shall be set approximately 40mm above ground surface with necessary guiding mechanism i.e., wheels at bottom along with a track allowing its smooth movement on floor shall be fitted as per site requirement.

16.6. The gates shall be provided with suitable locking arrangement.

17.0 MISCELLANEOUS GENERAL REQUIREMENTS

17.1. Dense concrete with controlled water cement ratio as per IS-code shall be used for all underground concrete structures such as pump-house, tanks, water retaining structures, cable and pipe trenches etc. for achieving water tightness.

17.2. All joints including construction and expansion joints for the water retaining structures shall be made water tight by using PVC ribbed water stops with central bulb. However, kicker type (externally placed) PVC water stops shall be used for the base slab and in other areas where it is required to facilitate concreting. The minimum thickness of PVC water stops shall be 5 mm and minimum width shall be 230 mm.

17.3. All mild steel parts used in the water retaining structures shall be hot-double dip galvanized. The minimum coating of the zinc shall be 610 gm/sqm. for galvanized structures and shall comply with IS:2629 and IS:2633. Galvanizing shall be checked and tested in accordance with IS:2633. The galvanizing shall be followed by the application of an etching primer and dipping in black bitumen in accordance with IS:3416.

17.4. A screed concrete layer not less than 100 mm thick and of grade not weaker than M10 conforming to IS: 456 shall be provided below all water retaining structures. A sliding layer of bitumen paper or craft paper shall be provided over the screed layer to destroy the bond between the screed and the base slab concrete of the water retaining structures.

17.5. Bricks having minimum 100 kg/cm2 compressive strength can only be used for masonry work. Contractor shall ascertain himself at site regarding the availability of bricks of minimum 100 kg/cm2 compressive strength before submitting his offer.

17.6. Doors and windows on external walls of the building (other than areas provided, with insulated metal claddings) shall be provided with RCC sunshade over the openings with 150 mm projection on either side of the openings. Projection of sunshade from the wall shall be minimum 600mm over window & door openings.

17.7. RCC staircase shall be provided for access to roof of the building. All stairs shall have maximum riser height of 150 mm and a minimum tread width of 300 mm Minimum width of stairs shall be 1500 mm. Steel doors shall be provided in the Mumty and height of Mumty should be at least 2.6m.

17.8. Angles 50x50x6 mm (minimum) with lugs shall be provided for edge protection all round cut outs/openings in floor slab, edges of drains supporting covers, edges of RCC cable/pipe trenches supporting covers, edges of manholes supporting covers, supporting edges of manhole precast cover and any other place where breakage of comers of concrete is expected.

17.9. Anti termite chemical treatment shall be given to column pits, wall trenches, foundations of buildings, filling below the floors etc. as per IS: 6313 and other relevant Indian Standards.

17.10. All reinforcement in RCC structures and structural steel members shall be of make TATA/ SAIL/ JSW.

17.11. The railing of staircase shall be 0.9 m average height comprising of stainless steel (Grade 304) Jindal Make member minimum 3 mm thick made of Hollow tubes, channels, plates etc., including welding, grinding, buffing, polishing and making curvature (wherever required) and fitting the same with necessary stainless steel nuts and bolts complete, i/c fixing the railing with necessary accessories & stainless steel dash fasteners , stainless steel bolts etc., of required size, on the top of the floor or the side of waist slab with suitable arrangement as per approval of Engineer-in-charge.

17.12. Loading/Unloading Platform stainless steel (Grade 304) Jindal make Balcony Railing hollow pipe 80x40x3 mm hand rail, horizontal pipes 40x20x3 mm .

17.13. All underground water retaining concrete structures shall have water proofing cement Plaster additive conforming to IS: 2645 water proofing for walls and base slab of all underground concrete structures like basements pump houses etc. shall be by "Injection Method".

17.14. All buildings shall have 750mm wide plinth protection all round.

17.15. Providing Fixing of Granite (Tan brown shade) to all Periphery of s/stn building 1000 mm above from Road level to give aesthetical look as per EIC shall be in scope of vendor.

17.16. Monorails, Monorail girders and fixtures shall be provided by the Bidder wherever required.

17.17. All foundations embedment, inserts, blockouts required for equipments shall be provided by bidder.

17.18. 50mm thick DPC shall be provided before laying of masonry (item no. 4.11 & 4.13-DSR 2012).

17.19. BSES Display board is to be provided of required size (3.0mx1.20m) and as per approved pattern /drawing of BRPL with name of the grid- ACP sheet signage with reverse 2D matter with LED Module Light having Automatic Timer on & off System.

17.20. Water and Sewer line connections to be done along with approval of CIVIC agency.

17.21. The details given in tender drawings shall be considered along with details available in this section of the specification while deciding various components of the building.

17.22. Balance Plot area should be covered with CC pavement/Pavers as per EIC

Items/components of buildings not explicitly covered in the specification but required for completion of the project shall be deemed to be included in the scope

18.0 INTERFACING

The proper coordination & execution of all interfacing civil works activities like fixing of conduits in roofs/walls/floors, fixing of lighting fixtures, fixing of supports/ embedments, provision of cutouts etc for indoor illumination, ventilation & Air conditioning shall be the sole responsibility of the Contractor. He shall plan all such activities in advance and execute in such a manner that interfacing activities do not become bottlenecks and dismantling, breakage etc. is reduced to minimum

19.0 FIELD QUALITY PLAN FOR CIVIL WORKS

The field quality plan for all civil works shall be in accordance with CPWD specification and other relevant Indian Standard Codes. All quality checks and procedures shall be followed as per relevant CPWD norms.

20.0 WATER SUPPLY

20.1. Water for construction work as well as drinking purpose shall be in the scope of Contractor.

20.2. The Contractor shall carry out all the plumbing/erection works required for supply of water in control room building.

20.3. A scheme shall be prepared by the Contractor indicating the layout and details of water supply which shall be got approved from the Owner before actual start of' work including all other incidental items not shown or specified but as may be required for complete performance of the works.

20.4. Either Bore-well or Connection from respective owners/DJB water source along with required pumps for water supply shall be in the scope of contractor. Although contractor shall provide an underground water reservoir, near the gate of minimum 20 M3 or sufficient capacity for refill of one fire Tanker. The water reservoir shall be provided with a high-pressure pump and single point fire hydrant outlet for refilling the fire tender in case of fire and emergency with proper waterproofing treatment & ceramic tiles finish on walls & Floor. Necessary valve shall be provided in the outlet.

20.5. The details of tanks, pipes, fittings, fixtures etc for water supply shall be approved by engineer in charge.

21.0 SEWERAGE SYSTEM

21.1. Sewerage system shall be provided for control room building.

21.2. The Contractor shall construct septic tank and soak pit suitable for 20 users or make connection with nearby existing sewerage system of Civic agencies/respective owners.

21.3. The system shall be designed as per relevant IS Codes.

21.4. External sewerage system including connection with internal services of building shall be within the scope of this contract. The connection and laying of sewer lines and manholes upto the point of connection with the sewer line of local civic agency if existing within 100m from any point of boundary of sub-station. If the sewer line of local civic agency does not exist in the area then septic tank with soak pit shall be constructed for control room building (suitable for 20 users). Vendor shall obtain necessary approval from civic agency for laying of sewer lines as aforesaid and connection thereof. Any municipal charges for approval and connection shall be paid by BRPL directly to the local authorities.

22.0 RAIN WATER HARVESTING

(a) Providing two recharge structures with bore wells at different locations as per approved drawing for rainwater harvesting system. The recharge structures shall be suitably located within the sub-station. Branch drains from the main drain carrying rainwater from entire switchyard, constructed in accordance with clause 9 & 10 shall be connected to the recharge structures.

(b) The internal dimensions of recharge shafts shall be 3.0 m X 2.5 m with 230mm thick lining of brick work upto a depth of 2.0 meter from Finished Ground level and 345mm thick brickwork below 2.0 meter depth. The brickwork shall be constructed with cement mortar 1:6 (1cement: 6 coarse sand). The overall depth of shaft shall be 3.0 meter below invert level of drain. The shaft shall be covered with RCC slab for a live load of 300 kg. per sqm. Two openings of size 0.7 x 0.7 meter shall be provided in the RCC cover slab. An iron cover made of 5mm thick chequered plate with hinges shall be provided on the openings. Galvanized M.S. rungs of 16mm diameter at spacing of 300 mm shall be provided in the wall of shaft below the opening in the RCC slab to facilitate cleaning of shaft.

(c) A 300 mm diameter bore well shall be drilled in the centre of the shaft. The depth of bore well shall be 5.0 meter more than the depth of sub soil water.

(d) A 100 mm diameter medium duty MS pipe conforming to IS: 1161 shall be lowered in the bore well keeping bail plug towards bottom of bore well. The pipe shall have 1.58mm holes for 4.0 meter length starting from 1.0 meter from bottom of bore well. Holes of 3.0mm diameter shall be provided for a length of 2.0 meter starting from the bottom level of coarse sand and down wards. The overall length of pipe shall be equal to total depth of bore well plus depth of shaft.

(e) Gravel of size 3mm to 6mm shall be filled around 100 diameter MS pipe in the bore well. The shaft shall be filled with 500 mm thick layers each from the bottom of shaft with boulders of size 50mm to 150mm, gravel of size 5mm to 10mm, coarse sand having particle size 1.5mm to 2.0mm

and boulders of size not less than 200mm respectively.

(f) Drawing based on above details of recharge structure for rainwater harvesting has to be prepared by contractor and to be approved from engineer in charge.

23.0 STATUTORY RULES

23.1. Contractor shall comply with all the applicable statutory rules pertaining to factories act (as applicable far the State), Fire Safety Rules of Tariff Advisory Committee. Water Act for pollution control, Energy Conservation Act, etc.

23.2. Provisions for fire proof doors, no. of staircases, fire separation wall, plastering on structural members (in fire prone areas) etc. shall be made according to the recommendations of Tariff Advisory Committee.

23.3. Statutory clearance and norms of State Pollution Control Board shall be followed as per Water Act for effluent quality from plant.

23.4. Foundation system adopted by Bidder shall ensure that relative settlement and other criteria shall be as per provision in IS: 1904 and other Indian Standards.

23.5. All water retaining structures designed as uncracked section shall also be tested for water tightness at full water level in accordance with clause no. 10 of IS :3370 (Part-I).

23.6. Construction joints shall be as per IS: 456.

23.7. All underground concrete structures like basements, pumps houses, water retaining structures etc. shall have plasticizer cum water proofing cement plaster additive conforming to 1S:9103. In addition, limit on permeability as given in 1S:2645 shall also be met with. The concrete surface of these structures in contact with earth shall also be provided with two coat of bituminous painting for water/damp proofing. In case of water leakage in the above structures, Injection Method shall be applied for repairing the leakage.

23.8. All building/construction materials shall conform to the best quality specified in CPWD specifications if not otherwise mentioned in this specification.

23.9. All tests as required in the standard field quality plans of CPWD or as per sound engineering practices have to be carried out.

23.10. The type and treatment of all foundation shall be as per recommendation of geo-technical investigation reports.

24.0 TESTS FOR MATERIAL / WORKMANSHIP

All tests required for various bought out items, materials, quality of workmanship or any other tests as desired by Project Manager and as specified in technical specification shall be carried out by the Bidder at his own cost in the presence of the authorized representative of the Engineer.

The quality assurance check lists are given at the end of respective chapters / sections of these specifications. The Bidder shall submit comprehensive Quality Assurance plan for all materials,

equipment, workmanship, services etc. and get it approved from the Engineer. This shall include setting up a test laboratory at site. However, such check list shall in no way limit the liability and responsibility of the Bidder in regard to quality of workmanship as detailed out in the specifications.

The sampling & testing of the construction materials shall be in accordance to latest CPWD Specifications related to all activities of the building and other civil construction works.

25.0 DRAWINGS

The successful Bidder shall first submit the structural design calculations along with general arrangement drawings for approval. After the approval of the design calculations by the owner detailed construction drawings shall be prepared and submitted for Employer's approval along with revised design calculations if required within 15 days. Required number of sets of design calculations, drawings and documents shall be submitted by the Bidder.

BOQ, Calculations and other documents etc. shall be on A4 size paper. All the drawings shall be drawn to the scale as far as possible on A1 size or larger size paper and should be legible. The submission shall be

- Three (03) Sets of approved and released for construction drawings/BOQ/Calculation for Owners reference.
- Six (06) Sets of final As Built drawings, design, BOQ, Calculation & O&M manual for all equipments supplied.
- Soft copies of all drawings/Documents/calculation in Auto CAD and Microsoft office file format as applicable.

Drawings shall be treated as submitted, only if provided with BOQ (If applicable). Transmittal sheet shall be mandatory to attach with all the drawing and documents. Format for transmittal shall be provided to successful bidder for drawing approvals etc.

26.0 ALTERATION IN SPECIFICATION AND DESIGN

The Project Manager shall have the power to make any alteration and omissions from, additions to or substitution for the original specifications, drawings, designs and instructions that may appear to him to be necessary during the progress of the work and the Bidder shall carry out the work in accordance with any instruction which may be given to him in writing signed by the Project Manager and such alterations, omissions, additions or substitutions shall not invalidate the contract and any altered, added or substituted work which the Bidder may be directed to do in the manner above specified as part of the work shall be carried out by the Bidder on the same conditions in all respects on which the Bidder agreed to do the original contract work. The time for completion of work shall be altered in the proportion that the altered, added or substituted work bears to the original contract work and the certificate of the Project Manager shall be conclusive as to such proportion.

The rates for the altered items of work shall be worked out on the following basis and necessary alternations in the total amount shall be made on that basis:

(a) The rates to be reimbursed or recovered shall be taken as same as those given in CPWD-DSR (2021) for those items for which the rates are available in CPWD - DSR (2021).

(b) Rates for the items not covered under CPWD - DSR (2021) shall be derived from the rates of

similar items of CPWD schedule of rates.

(c) In the event there is no similar class of work specified in the CPWD - DSR (2021), the Bidder shall work on a rate for such an item on the basis of the prevalent market rates for materials / men / machines and submit the same together with the detailed analysis to the Project Manager within 7 days. The Project Manager shall thereafter review the correctness and then conduct necessary negotiations with the Bidder to arrive at a mutually agreeable rate. Engineer's decision in regard to rates of such items shall be final and binding on the Bidder.

In case of conflict between this chapter and other Chapters of Technical Specifications, provisions given in this chapter shall govern.

\

Table 1- Finishing Schedule

No	Location	Flooring	Wall Internal	Ceiling	Doors, Windows, Ventilators
1	Control room	52 mm thick CC flooring with concrete hardener topping & Dust proof Epoxy Paint & False Flooring.as per specification clause No-6.5.2	Plastic emulsion Paint on smooth surface applied with putty	Oil bound washable distemper on smooth surface applied with putty to RCC Ceiling & P/F of False ceiling approved by EIC as per specification clause no. 6.9	Doors: 02 hours fire rated doors as per clause no. 6.10.b Windows & Ventilators: Aluminium Windows & Ventilators As per clause no. 6.10.c
2	Office rooms, maintenance room, Reception Lobby/ Passage, staircase area/ outdoor steps	Granite Flooring	Oil bound washable distemper on smooth surface applied with putty	Oil bound washable distemper on smooth surface applied with putty	Doors: Steel door as per clause no. 6.10.a Windows & Ventilators: Aluminium Windows & Ventilators As per clause no. 6.10.c
3	Toilet	Anti skid Ceramic tiles with white cement.	Ceramic glazed tile toilet, for pantry above working platform up to 750 mm.	Oil bound washable distemper on smooth surface applied with putty	Doors, Windows & Ventilators: Aluminium Doors, Windows & Ventilators As per clause no. 6.10.c
4	Cellar	52 mm thick CC flooring with concrete hardener topping	Oil bound washable distemper on smooth surface applied with putty	Oil bound washable distemper on smooth surface applied with putty	Doors: Steel door as per clause no. 6.10.a Windows & Ventilators: Aluminium Windows & Ventilators As per clause no. 6.10.c
5	Other areas not specified	Double charged Vitrified tile of size 600x600mm of make Kajaria or equivalent	Oil bound washable distemper on smooth surface applied with putty	Oil bound washable distemper on smooth surface applied with putty	Doors: Steel door as per clause no. 6.10.a Windows & Ventilators: Aluminium Windows & Ventilators As per clause no.

					6.10.c
6	Switchgear Room/GIS Room	Self leveling Epoxy flooring 2mm thick after application of 2mm thick screed over 52 mm thick CC flooring with concrete hardener topping	Oil bound washable distemper on smooth surface applied with putty	Oil bound washable distemper on smooth surface applied with putty	Doors: 02 hours fire rated doors as per clause no. 6.10.b Windows & Ventilators: Aluminium Windows & Ventilators As per clause no. 6.10.c
8	All external surfaces (S/stn building, boundary wall and other structures) shall have Texture finish of Make UTTPL (Ultratech Texture Paints Pvt. LTD) The texture finish and shade as approved by BRPL.				

BSES Rajdhani Power Limited
BSES Bhawan, Nehru Place, New Delhi- 19

TECHNICAL SPECIFICATION

FOR

ERECTION, TESTING & COMMISIONING OF 66/11kV VAMASUNDARI GIS GRID SUBSTATION AT NEW DELHI ON TURNKEY BASIS

(SPEC NO. BRPL-EHV-TS- VAS)

Prepared by	**Sonia Mittal**		**Rev: 0**
Reviewed by	**Uttam Shukla**		**Date: 21.11.2025**
Approved by	**Deepti Sharma**		

Technical Specification for 66/11KV VAMASUNDARI GIS Grid Substation in New Delhi

INDEX

S.No	Description	Page. No
1	General Design Criteria	3
2	Civil Work	17
3	66kV GIS	49
4	66kV CRP	88
5	Battery Charger & DCDB	88
6	Li-Ion Battery	115
7	415 V AC Distribution Board	128
8	Grounding & Lightning Protection System	145
9	LT Power Cable	156
10	Control Cable	175
11	Illumination System	186
12	11KV Indoor Switchgear	198
13	Cable Installation & Accessories	260
14	Exhaust and Ventilation	266
15	Fire Extinguisher	270
16	Fire Suppression system	273
17	Video Surveillance System	281
18	Fire Detection & Alarm System	287
19	Packing & Transportation	291
20	Materials Workmanship & Tests	294
21	Misc Activities	298
22	EOT Crane	305
23	Cable Seal Solution	311
24	Insulating Mat	317
25	Station Transformer	320
26	SCADA Interface Works & Automation	402
27	11KV Auto-Switched Capacitor Bank	429
28	Power Transformer (incl NIFPS)	441
29	Structural Work	531
30	Lightning Arrestor	538
31	High Mast	541
32	Outdoor Switchyard Material	554
33	IT Devices	566
34	Tri vector ABT meters	574
35	GIS Termination Kit	590
36	Approved Vendors	612
37	Training and Inspection	618
38	Spares Maintenance Tools and Tackles	622

SCHEDULE & ANNEXURE

Volume-2

Schedule	Description	Page No.
Annexure-O	Technical specification for New Grids 24x7 O&M support	
Schedule – A	Schedule of General Information	
Schedule – B	List of Drawings enclosed with Bid	
Schedule – C1	Technical Data Sheets of HT Indoor Switchgear	
Schedule – C2	Technical Data Sheets of CRP	
Schedule – C3	Technical Data Sheets of Battery Chargers	
Schedule – C4	Technical Data Sheets of Battery Bank	
Schedule – C6	Technical Data Sheets of 11KV Capacitor Bank	
Schedule – C7	Technical Data Sheets of LT Power Cable	
Schedule – C8	Technical Data Sheets of Control Cable	
Schedule – C9	Technical Data Sheets of Illumination System	
Schedule – C10	Technical Data Sheets of 415 V AC Distribution Board	
Schedule – C11	Technical Data Sheets of Station Transformer	
Schedule – C12	Technical Data Sheets of Grounding & Lightning Protection System	
Schedule – C13	Technical Data Sheets of Cable Accessories	
Schedule – C14	Technical Data Sheets of Cable Trays	
Schedule – C15	Technical Data Sheets of 66kV GIS	
Schedule – C16	Technical Data Sheets of Power Transformer	
Schedule – C17	Technical Data Sheets of Outdoor LA	
Schedule – D	List of Installation	
Schedule – E1 & E2	Deviation from Specification	
Schedule – F	Delivery, Terms and Conditions	
Schedule – G	Schedule of Tests	
Schedule – H	List of instruments, Testing Equipment, Tools & Tackles for Erection & Maintenance	
Schedule – I	Schedule of Recommended Spares	
Schedule – J	Declaration	
Drawings.		
1	Main Single Line Diagram	
2	Substation Layout Plan (suggestive)	

BSES Rajdhani Power Limited

TECHNICAL SPECIFICATION

FOR

GENERAL DESIGN CRITERIA

Prepared by	**Sonia Mittal**		**Rev: 0**
Reviewed by	**Uttam Shukla**		**Date: 21st Nov, 2025**
Approved by	**Deepti Sharma**		

1.0 INTENT OF SPECIFICATION

This specification is intended to cover complete design, engineering, manufacturing, assembling, testing at manufacturer's works, supply and Transportation F.O.R. site of all equipment and accessories, steel structures, all structural work, substation building, Civil and architectural work, complete erection, testing, commissioning & putting into successful commercial operation of 66/11 KV GIS substation including supply of all Labour, supervision, tools & plants and supplies as required.

The 66kV Gas insulated Double Bus substation shall have following bays with equipments and civil works: - Four (04) no's Feeder Bay – Two (02) no's Transformer bay - One (01) no Bus Coupler bay. -Two (02) sets Bus PT.

The substation shall have control room building with 11kV Indoor Switchgear, 66kV Control and Relay Panel, 66kV GIS, Battery & Battery Charger, ACDB and DCDB etc. The suggestive Layout Plan and Single Line diagram of the substation is enclosed.

This specification shall be read in conjunction with other sections of bidding document. In the event of any discrepancy with the listed document, the most stringent one shall govern. In the tender document, the term 'Contractor', 'Bidder' and 'Vendor' has been used interchangeably.

It is advisable that bidder should visit the site to confirm its present status prior to submission of their bid.

2.0 SCOPE OF SUPPLY

This scope of work shall include design, engineering, manufacture, shop floor testing, inspection, packing, dispatch, loading, unloading and storage at site, transit/storage and construction insurance, assembly, erection, civil structural, architectural work, complete pre-commissioning checks, testing & commissioning at site, obtaining statutory clearance & certification from State Electrical Inspector, Municipal Corporation department, Fire officer, Horticulture department etc. and handing over to the Owner after satisfactory commissioning of complete 66/11 kV GIS substation of BSES Rajdhani Power Ltd. at Vamasundari, New Delhi.

The scope includes all material, equipment and works required for the construction of the Substation complete with all items considered essential for safe and trouble-free continuous commercial operation of the system in a manner acceptable to the Owner and complying with latest revision of National and International Standards, Codes & Practices, Indian Electricity Rules, CEA (Measures relating to Safety and Electric Supply) Regulations 2010 and Indian Electricity Act.

The scope of supply broadly includes the following:

2.1 Major Equipments:

- 11kV Auto-Switched Capacitor Bank (APFC) Outdoor Type -
  - 7.2 MVAR -2 Sets
- 66/11kV **31.5MVA** Power Transformer and NIFPS along with accessories- 2 Sets
- 66KV GIS Panels (as per SLD) including GIS termination Kits - **7** Sets
- 220V Ni-Cad Battery bank As per battery sizing calculation with **2 hours** Backup time and minimum 150AH - 2 Set
- Battery charger with DCDB -1 Set
- ACDB -1 No.
- Station Aux. Transformer, 11/0.433kV, 400kVA -1 No with Station transformer to ACDB cable shall be 4CX150 sqmm
- SCADA RTU-1 Set
- High mast lights 16 M high-2 Nos
- Gas filling device with filter and leakage detector for above GIS Panel (DILO Make)- 1 Set

2.2 Item as System

- 11kV VCB Switchgear Panel board with Numerical protection relays (refer SLD).
- Earthing trucks for 11KV Panels -1 Nos of bus earthing truck and 2Nos of cable earthing truck for each size of panel.
- All Numerical protection Relay shall be supplied with Conformal coating
- Grounding and earthing of entire substation including all the fences such as Power Transformer Fencing, Aux. transformer fencing and capacitor bank fencing as per Technical Specification. 220V Ni-Cad Battery bank, one set of Battery charger compatible with Ni-Cad battery.
- Outdoor illumination including street lighting with Poles.
- Indoor illumination including emergency lighting (DC lighting incase of black out)
- Air Conditioning, Exhaust and Ventilation for complete substation building.
- Fire detection and alarm system including its SCADA integration.
- Direct stroke lightning protection by shielding spikes.
- 11kV Panel Fire Suppression System including its SCADA integration
- Video Surveillance system including its SCADA integration.
- Material GPS Tracking System for transit of all the material
- Fiber optic Cable including patch cord, LIU splicing inside substation as well as remote end substation for line differential protection.
- Cable Trench Indoor and Outdoor (Control and Power Cable Trench shall be separate)
- In GIS room height till the hook of EOT crane shall not be less than twice the GIS height plus sling sag clearance. Additional height for EOT Crane Maintenance space shall be provided.
- Plinth of Power Transformer shall be considered for minimum **31.5MVA** Power Transformer.
- GIS Cable cellar minimum height 3000mm with spare cable entry provision at least 4 nos circuit.
- Culvert for road crossing
- The building foundation shall be designed for Ground floor + First floor + 2nd Floor
- Fire retardant paint for all cable entering to panels till the cable opening
- 6 Months O&M from the date of handing over of Substation (refer Annexure-O for Details).
- AC and DC Failure Hooter near Security gate at any pole
- Cyber security readiness substation for entire substation

2.3 Items as Lot

- LT Power & Control cables (fire retardant type) supply and termination and Glands.
- Building Cable entry Sealing
- Supply and erection of 11KV/33KV/66KV Power cable termination kits and Glands.
- Cable trays with supporting structure.
- Supply and ETC of GIS Termination Kits
- Supply and installation of Fire extinguisher
- Direct Stroke Lightning Protection for outdoor equipments
- Maintenance tools & tackles including testing & measuring instruments
- Cabling between equipments and RTU
- Supply & Erection testing and commissioning of Line differential protection Relay at remote end
- Rubber Mat for all Indoor equipments front and back side
- Laying and Termination of all Free issue 11KV/33KV/66KV cables.
- Supply and erection of Zebra Conductor as per requirement.
- Supply and installation of Material required for IMS (Entry and Exit Sign, First aid Box etc.)
- Any other Misc. work (like nomenclature writing, SLD framing etc.)
- Free issue and return of items/excess materials from BRPL Stores to Site or Site to BRPL stores shall be in Vendors Scope of work.

2.4 Civil Works

- As per Civil specification

2.5. Design Work

Design documentation in sufficient copies including design memo, calculations, general arrangement, plans, elevations and sectional drawings, sag/tension calculations, short circuit calculations, electro-dynamic force calculations, single line diagrams, schematic interconnection drawings, wiring diagrams, foundation calculations, foundation plans/details, cable schedules, bill of materials, lighting system design calculations, earthing system design calculations, illumination system design, calculation, conductor sizing, calculation insulation coordination, protection coordination etc.

- Submission of drawings/GTP/Layout/SLD etc. in 3 sets of Hard Copy for BRPL Approvals.
- Operation & Maintenance Manuals and As-built drawings. (Six sets hard copy & two sets soft copy)
- Documentation required by State Electrical Inspector or by other statutory body for statutory approval/certification of the Substation installation. (as required)
- Temporary sheds for storage of equipment, tools & tackles, construction offices with required fittings & furnishings.

The above equipment and services are specifically listed for the guidance of the Bidder. Apart from the above, Single Line Diagram and Layout Plan (suggestive) may also be referred for further details of equipment. However, it is to be understood that the Contractor's scope is not limited to the items specifically listed above but covers all items required for the completion of a safe and fully functional Substation.

2.6 Tools and Spares

Tools & Commissioning Spares: Contractor should be equipped with all tools, tackles and commissioning spares for successful commissioning of substation.

Recommended Spares: Contractor shall be providing the Owner a list of recommended spares along with quantity and market/budgetary prices. This shall be a recommendation only and shall not be a part of quotation for price bid

3.0 COMPLETION SCHEDULE

The contractor shall be fully responsible to complete the project in time. It is desired that the total project should complete in *300 days* from the date of LOA. The broad completion schedule is attached here under for reference. The detailed completion schedule shall be prepared by contractor in MS-Project or Primavera software and shall be submitted at the time of detail engineering for approval. The detailed schedule shall be finalized with the help of schedule given by Owner.

Activity schedule shall be as tabulated below. The reference date shall be the date of LOA.

Sl. No.	Description of Work	Time Line from Zero Date(in days)	Responsibility
1	Zero Date (Letter of Award)	0	BRPL
2	Mobilization of manpower	15	Contractor
3	Inception Report	15	Contractor
4	PERT chart approval / L2 schedule majorly including : • Manpower & Machinery to be deployed • Procurement of major equipment • Dispatch schedule of the major item • Intermediate milestone schedule	15	Contractor
5	Submission of Drawings/Documents/ calculations for Engineering Approval	30	Contractor
6	Engineering Approval	60	BRPL
7	Civil Works	130	Contractor
8	Procurement/Supplies	210	Contractor
9	Equipment Erection	240	Contractor
10	Commissioning of 66kV line	255	BRPL
11	Commissioning of 1st Power Transformer	255	Contractor
12	Commissioning of 2nd Power Transformer	270	Contractor
13	Testing & Commissioning of entire substation	285	Contractor
14	Handing Over	300	Contractor

4.0 ELECTRICITY & WATER FOR CONSTRUCTION

Electricity Supply and Water for construction purpose shall be arranged by Contractor.

5.0 SUPPLY AND WORKS BY BIDDER

The termination kits/jumpers, Glands, Cable Seal and interconnections for all the Cables/Conductors shall be in the scope of Contractor. Extension of 48 core (12 Single Mode and 36 Multimode) Fiber optic embedded in Infeed Power Cable and interconnections for all the Cables/Conductors (with all the accessories of 48 core FO including LIU, joint box, patch cord and extension of fiber optic from Power Cable to LIU), shall be in the scope of Contractor. Laying of cables and stringing of Conductors including its hardware fitting and insulators in the substation premises shall also be in the scope of Contractor only. Cable mounting structure for Power transformer Incoming shall be in Contractors scope.
Works for Future Transformer like Transformer Foundation, Cable trench, Earthing, Cable Seal, Cable Trays shall be in Contractors scope. Also Earthing and grounding, DSLP, illumination, trenches for future transformer shall be in Contractors scope.

.**WORKS BY OWNER:** The following works shall be carried out by Owners:

1. Soil Investigation and Soil resistivity test
2. Topographical survey

The trenches and cable trays for Incoming/outgoing cables inside the Substation premises shall be in the scope of Contractor.

6.0 SUPPLIES AS FREE ISSUE ITEMS:

The following items shall be supplied free of cost to vendor as per requirement :

- 11 kV 1x1000 sq. mm. XLPE Cables
- 11 kV 3x300 sq. mm. XLPE Cables
- 66kV 3Cx300 sq. mm XLPE Cables
- 66 kV 1x1000 sq.mm. XLPE Cables

However, the termination kits/jumpers, Glands and interconnections for the above Cables/Conductors shall be in the scope of vendor. Laying of these free issued cables, stringing of Conductors including its hardware fitting & insulators and ETC of Power Transformers in the substation premises shall also be in the scope of vendor only.
Free issue and return of items/excess materials Transportation from BRPL Stores to Site or Site to BRPL stores or other sites shall be in Vendors Scope of work.

7.0 COORDINATION WITH STATUTORY BODIES & OUTSIDE AGENCIES

The Contractor shall be fully responsible for getting all statutory clearances, including but not limited to Electrical Inspector clearance, Civic Agencies (MCD/DDA/PWD or any other), Horticulture department, Fire officer or any other statutory bodies for implementation of the work.

The contractor shall be fully responsible for carrying out all co-ordination and liaison work as may be required with Electrical Inspector, Civic Agencies (MCD/DDA/PWD or any other), Horticulture department, Fire officer or any other statutory bodies for implementation of the work.

The application on behalf of BRPL for submission to the Electrical Inspector and other statutory bodies along with copies of drawings complete in all respects shall be done by the contractor & approval / certificates shall be obtained by the contractor well ahead of time so that the actual

commissioning of equipment is not delayed for want of inspection and approval by the inspector & statutory bodies. The contractor shall arrange the actual inspection work by Electrical Inspector.

Official fees to electrical inspector / statutory bodies shall be paid by the Contractor.

8.0 COORDINATION WITH OTHER CONTRACTOR & OWNER'S SYSTEM

The contractor shall be fully responsible for carrying out all the co-ordination work required with their sub-contractors, if any, as well as with Owners system for execution and completion of work.

9.0 TERMINAL POINTS OF CONTRACTOR'S SCOPE

9.1 Up to Line take off point and including provision for Cable termination at the incomer and outgoing bays.

9.2 Outdoor Cable Trenches : Upto the boundary wall of substation

9.3 Lighting/Illumination/Lightning : Within Outdoor &Indoor Substation Area

9.4 Earthing : Within Substation area and building.

9.5 Water supply and drainage at suitable point near the substation boundary wall at location to be decided during detailed engineering.

10.0 SALIENT FEATURES, BASIC DESIGN CRITERIA AND MINIMUM TECHNICAL REQUIREMENTS OF 66/11 KV SUBSTATION/SUBSTATION EQUIPMENTS

10.1 Introduction

BRPL is setting up 66/11KV GIS Grid substation at Vamasundari New Delhi. The Substation shall be constructed on turnkey EPC execution. EPC contractor is responsible for detailed design also. In this paragraph only salient features, basic design criteria and Owner's minimum technical requirements are enumerated for the guidance of the Bidder. However, this should be referred in conjunction with SLD enclosed. The salient features of substation have been tabulated as under:

Particulars	Description
Voltage Level	66/11 kV
Infeed Plan	66 kV Double Circuit
Infeed arrangement	66 kV U/G Cables
Substation Capacity	2 x 31.5 MVA
Present status of Land	In possession of BRPL
Previous work done at site(if any)	Boundary wall

10.2 Substation Capacity

The substation capacity shall be as per the table in Clause no. 10.1 above.

10.3 11KV Switchgears

The 11KV Switchgear shall be installed inside the substation building. The switchgears shall be equipped with Vacuum Circuit Breaker. The metering and protection relays shall be part of switchgear only. Control voltage shall be 220 V DC.

10.4 66/11KV Power Transformer

The Outdoor Power transformer shall be **25/31.5MVA,** ONAN/ONAF with OLTC. The microprocessor based Transformer monitoring shall be provided in place of RTCC panel. Each Transformer shall be provided with NIFPS. Each Transformer shall be provided with NIFPS along with its cables, one extra N2 cylinder and extra valves as per specification.

10.5 Battery Charger and Battery Bank

The Control supply shall be 220V DC. The Ni-Cd Battery bank shall be installed in separate room with proper ventilation system as per safety requirement .The battery charger shall be SMPS based installed inside control room building and shall be SCADA compatible.

10.6 11kV APFC Capacitor Bank

Two set of 7.2MVAR capacitor bank shall be installed indoor. Each capacitor bank shall have one **fixed step of 0.9 MVAR and two steps of 1.8 MVAR and last step of 2.7 MVAR**. Each sub bank shall be provided with motorized 11KV Isolator cum earth switch, 0.2% series reactors, capacitor switch/vacuum contactor, LA, HT fuses, RVT, Neutral Displacement Relay (numerical type), Under voltage Relay. Automatic power factor controller and all necessary equipment for auto switching.

10.7 Gas Insulated Switchgear

The GIS switch gear shall be of modular design offering high degree of flexibility. Each module shall be complete with SF6 gas circuit breaker, Isolators, fast Earthing switches, Voltage transformers, cable end enclosures, Surge Arrester., local control cubicle, Line Side Isolator shall be integral part of GIS. One set Gas filling device along with filter, Gas leakage detector shall be integral part of GIS.

10.8 Protection coordination through **ETAP Software.**

10.9 Power and Control cable -

All power and control cables within substation premise will be laid in single piece. No cable joint shall be accepted within substation premise.

10.10 Other Parameters for 66 KV Substation

Following parameters /service conditions shall prevail for entire system design under the scope of this turnkey project:

General Service Condition

S. No	Particulars	Data
1	Design Ambient temperature	50 °C
2	Seismic Condition	Zone IV as per IS 1893
3	Wind Pressure	195 kg/M² upto elevation of 30 M as per IS 875
4	Maximum Relative Humidity	100%
5	Maximum Altitude above Sea level	1000M
6	Rainfall	750mm (concentrated in 4 months)
7	Pollution level	Heavy/Dry

System Parameters

S. No.	Parameters	HV Side	LV Side
1	Nominal Voltage (kV)	66	11
2	Rated Voltage (kV)	72.5	12
3	Rated Frequency (Hz)	50 +/- 3%	50 +/- 3%
4	System Neutral Earthing	Solidly Grounded	Solidly Grounded
5	Short Circuit rating (for 3 sec)	3600 MVA / 31.5 kA	500 MVA / 26.3 kA
6	Basic Insulation Level		
6.1	Impulse frequency withstand voltage (kVp)	325	75
6.2	Power frequency withstand voltage (kV rms)	140	28

Parameters for Switchyard Equipments (66kV)

S.No	Particulars	66kV	11kV
1	Minimum Creepage	31mm/KV	31mm/KV
2	Minimum Clearances		
2.1	Phase to Phase	630 mm	280mm
2.2	Phase to Earth	630 mm	140mm
3	Safety Clearances		
3.1	Sectional Clearances	3000 mm	
3.2	Height of lowest live point on the insulator from the ground	4300 mm	
4	Bus Configuration	Double Bus	Single Bus
5	Conductor	Silver Platted/tinned electrolytic copper / ACSR Zebra(For Jumpering)	Silver Platted/tinned electrolytic copper

Site Service Conditions (considering main external road at 0.00 level)

S. No.	Particulars	Level
1	Substation Road level	+750 mm
2	Final top level of gravel in outdoor yard	+750 mm
3	Final top level of Equipment & gantry foundation	+1050 mm
4	Control Room Building Plinth Level	+1500 mm

11.0 CODES & STANDARDS

The contractor shall follow latest Indian Standards or international standard. Refer respective equipment specification for applicable standards.

12.0 ENGINEERING DELIVERABLES

The Bidder shall submit following minimum Engineering Deliverables from award of the Contract. Any other drawing / calculation which is not listed below and may be required for execution of the job shall also be submitted by the bidder.

S. No.	Drawing Title
A.	Inception report including work schedule and PERT chart within two weeks from LOA(Letter of Award)
B.	**Electrical Drawing**
1	Main Single Line Diagram indicating bus/breaker rating, cable/overhead conductor size, fault levels of different voltage grade, Transformer details, metering and protection with CT / PT cores / ratio / burden / accuracy class.
2	Complete BOQ of the substation with technical details.
3	Single Line Diagram of 415 V AC Distribution board
4	Single Line Diagram of 220V DC Distribution board
5	Overall Site Layout Plan
6	Maximum & Minimum fault level calculation for the substations
7	Insulation coordination
8	Switchgear/Control building layout – Plan
9	Cable trench layout Plan & Section – outdoor
10	Cable tray layout Plan & Section – Indoor
11	BOQ of Cable trays and accessories
12	Sizing calculation of LV Cables
13	Power cable schedules
14	Control cable schedules
15	BOQ of Cables
16	Codification of cable trays and cable tray/cable tag marking concept
17	Ground mat design Calculation from actual site soil investigation
18	Drawing of ground mat along with BOQ
19	Drawing of Indoor equipment grounding details
20	Outdoor equipment grounding arrangement and details
21	Input /Output list of SCADA system
22	Outdoor Illumination system design Calculation
23	Indoor Illumination system design Calculation
24	Drawing of Outdoor Illumination with erection details
25	Drawing of Indoor Illumination with erection details
26	Complete BOQ indoor and outdoor illumination system
27	CT/PT sizing/detail calculation of burden, knee point voltage
28	All major equipment sizing calculation

S. No.	Drawing Title
29	Cabling, earthing & lightning concept
30	Power Transformer foundation details, soak pit arrangement, firewall segregation
31	Fire fighting arrangement of Transformers and indoor equipments
32	Relay setting with calculations
33	GIS details and its calculations
34	As built documentation of the drawing / documents
35	DC Sizing Calculation
36	Exhaust and Ventilation
37	All the other required design Documents
C.	**Civil Drawings**
S. No	**Drawing Title**
1	GA & RCC detail of boundary Wall.
2	Layout Plan For Control Building
3	RCC detail of Control Room Building
4	RCC detail of Outdoor Cable Trench including trench cover
5	GA & RCC detail of Transformer foundation & Oil Soak pit
6	GA & RCC detail of Auxiliary Transformer
7	GA & RCC detail of Capacitor Bank
8	GA & RCC detail of Burnt Oil Tank
9	GA & RCC detail of Lighting poles
10	GA & RCC detail of Equipment foundation
11	Structural Detail of Equipment
12	Overall layout plan indicating landscaping.
13	Detail of Fire wall
14	GA & RCC detail of NIFPS System
15	Detail of Water Supply and Sanitary system
16	GA & RCC detail of Septic Tank
17	Detail of Rainwater Harvesting System (detail of recharge pit)
18	GA & RCC detail of Underground Water Tank
19	GA and detail of fencing with gates of Switchyard, Capacitor Bank & Auxiliary Transformer
20	GA and Section of Road & Storm Water Drain
21	RCC detail of Security Gumtee
22	Outdoor Trench layout for switch yard
23	Sectional Details for Outdoor Trenches
24	Conduit plan for Control room building.
25	Switch yard layout

13.0 SUBMISSION OF DRAWINGS & OTHER DOCUMENTS

BOQ, Calculations and other documents etc. shall be on A4 size paper. All the drawings shall be drawn to the scale as far as possible on A3 size or larger size paper and should be legible. The submission shall be

- **T (03)** Sets of approved and released for construction drawings/BOQ/Calculation for Owners reference.
- Six (06) Sets of final As Built drawings, design, BOQ, Calculation. O&M manual, for all equipments supplied.

- Soft copies of all drawings/Documents/calculation in Auto CAD and Microsoft office file format as applicable.

Drawings shall be treated as submitted, only if provided with BOQ (If applicable). Transmittal sheet shall be mandatory to attach with all the drawing and documents. Format for transmittal shall be provided to successful bidder for drawing approvals etc.

14.0 TEST CERTIFICATES

All equipments shall be tested as per their corresponding specification in Tender document.
All tests (Type test, Routine test, Acceptance test) shall be carried out at bidders cost. However prices against special test for equipments have to be quoted separately. Special test shall be Owners decision.
Type and Special test has to be carried out at CPRI/ERDA or as mentioned in specification. Routine, and Acceptance tests may be carried out at manufacturer's lab.

Bidder shall submit type test certificate of all the equipment with validity of five years (on the date of bid opening carried out at CPRI/ERDA.

15.0 QUALITY PLAN

15.1 Manufacturing Quality Plan

Manufacturing Quality plan with respect to all major equipment and work has to be submitted by the successful bidder for following as a minimum:

I. An outline of the proposed work and execution plan for approval.
II. The structure of the supplier's organization for the contract
III. The duties and responsibilities assigned to staff ensuring quality of work for the contract
IV. Hold and notification points
V. Submission of engineering documents required as per specification
VI. The inspection of materials and components Inspection during fabrication /construction
VII. Final inspection & tests

Successful bidder shall include submittal of bills invoice, Bill of lading, and factory test certificate for grade, physical tests, dimension, and specific watt loss per kg of core material to the purchaser for verification in quality plan suitably.

15.2 Field Quality Plan

15.2.1 Quality Assurance Plan for various stages of execution work shall be submitted by Contractor for approval of Owner. The plan should include the Organization structure so the Safety personnel to ensure the Manpower and Material safety during the entire duration of execution.

15.2.2 Environment, Health and Safety (EHS) shall be covered in the plan submitted by Contractor.

15.2.3 A checklist to ensure the quality of equipment installation shall be submitted by Contractor for approval

16.0 INSPECTION

As per Chapter 35 (Training and Inspection) Volume - 1

17.0 TRAINING OF BRPL OFFICIALS

As per Chapter 35 (Training and Inspection) Volume - 1

18.0 MONITORING OF MATERIAL DISPATCH STATUS

Once the material is dispatched after Final clearance Transport Vehicle shall have GPS Tracking Device (Preferably Map My India Asset Tracking Device) and status of dispatch of material shall be sent to all the stake holders via SMS thru GPS Device. This shall be applicable to all the major equipments like GIS Panels, HT Panel, and Power Transformers, CRP and RTU.

19.0 OPERATION AND AFTER SALE SERVICES

Contractor shall carry out all day to day operations of entire Substation after successful commissioning for a period of 6Months. Contractor shall assign 24x7 operating personnel for operation activities.
Contractor shall appoint appropriate after sale services staff for all necessary service requirements for a period of 6 Months. Contractor shall keep all necessary spares, tools & tackles, T& P, testing equipments for successful operation and maintenance requirement for said period.

Contractor shall provide after sale support for the tenure of stipulated time.
Responsibility of Contractor O&M Engineer shall include:

a) Training of BRPL officials on successful operation of all the substation equipments including GIS, Relays and SCADA.

b) Operation and Maintenance of entire substation including GIS, Relays and SCADA.

c) Refer Annexure-O for details

BSES Rajdhani Power Limited
BSES Bhawan, Nehru Place, New Delhi- 19

TECHNICAL SPECIFICATION

FOR

CIVIL WORKS

Prepared by	**Konchada Rao**				**Rev: 0**
Reviewed by					**Date: 02nd May, 2025**
Approved by	**Ajay Karan**				

1.0 GENERAL REQUIREMENT

1.1. This chapter includes the technical requirements for Establishment of **66/11 KV GIS Substation at VamaSundari KNMA** including associated design and preparation of all civil & structural drawings and execution of all associated civil works. This chapter deals mainly with technical specifications for the design, supervision and construction of complete civil works including structural and finishing works.

1.2. The specifications are intended for general description of work, quality and workmanship. The specifications are not however exhaustive to cover minute details and the work shall be executed according to relevant latest Indian Standards/IRC specifications/CPWD specifications. In the absence of the above, the work shall be executed according to the best prevailing practices in the trade, recommendations of relevant American or British Standards or to the instructions of Engineer. The IS standards/IRC specifications/CPWD specifications to be followed are mentioned in the technical specifications attached hereto. They shall be latest edition/version of the same issued 15 days prior to the date of opening of this tender. The Contractor is expected to get himself clarified on any doubts about the specifications etc. before bidding and the discussions recorded in writing with the Owner in respect of interpretation of any portion of this document.

1.3. The work shall be carried out according to the design / drawings to be developed by the Contractor and approved by the Owner based on Tender Drawings supplied to the Contractor by the Owner. For all buildings, structures, foundations etc. necessary layout and details shall be developed by the Contractor keeping in view the functional requirement of the Sub-Station facilities and providing enough space and access for operation, use and maintenance based on the input provided by the Owner. Certain minimum requirements are indicated in this specification for guidance purposes only. However, the Contractor shall quote according to the complete requirements.

1.4. The Contractor shall take all necessary precautions to protect all the existing equipments, structures, facilities & buildings etc. from damage. In case any damage occurs due to the activities of the Contractor on account of negligence, ignorance, accidental or any other reason whatsoever, the damage shall be made good by the Contractor at his own cost to the satisfaction of the Engineer. The Contractor shall also take all necessary safety measures, at his own cost, to avoid any harm / injury to his workers and staff from the equipment & facilities of the power station.

1.5. During the progress of work, the Engineer will exercise supervision of the work to ensure that the technical provisions of the contract are being followed and the work is being executed accurately and properly. However, such supervision shall in no way relieve the Contractor of the responsibility for executing the work in accordance with the specifications.

1.6. Before submitting the bid, the Contractor shall inspect and examine the site and its surroundings and shall satisfy himself as to the nature of the ground and subsoil, the availability of materials necessary for completion of the work, means of access to site and in general shall himself obtain all necessary information as to risks, contingencies and other circumstances which may influence or affect his offer. No extra claim consequent on any misunderstanding or otherwise shall be allowed.

1.7. During execution, if any additional requirement arises for successful commissioning of grid ,then same shall be in scope of vendor by considering all safety and quality standards in all aspects

2.0 GEOTECHNICAL INVESTIGATION

The Owner will carry out Geo Technical Investigation and Topographical Survey for the entire Sub-Station plot including switchyard. The copy of the report will be given as an input to bidder for Civil

Design & estimation work. In case of any further detailed study is required, same shall be in scope of bidder.

3.0 SITE PREPARATION

3.1. Scope

3.1.1. This clause covers the design and execution of the work for site preparation, such as clearing of the site, the supply and compaction of fill material, excavation and compaction of backfill for foundation, road construction, drainage, trenches and final topping by stone (broken hard stone). This work shall also include disposal of any non-essential/excess soil or malba.

3.2. General

3.2.1. The layout and levels of all structures, etc shall be made by the Contractor at his own cost from the general grids of the plot and benchmarks finalized / approved by the Owner. (The required filling up to formation level shall be in the scope of Vendor). The Contractor shall give all help in instruments, materials and personnel to the Owner for checking the detailed layout and shall be solely responsible for the correctness of the layout and levels.

3.2.2. The Contractor shall have to make good to all the damages to the boundary wall and gates during work execution.

3.2.3. Contractor shall develop a building layout and other layouts so that the trees inside the plot shall be avoided from cutting. In extreme conditions, if the tree cutting is unavoidable, necessary liaison for permission shall be on part of Contractor from respective Govt. Agency. Requisite formalities shall be carried out by Owner. Fee shall be borne by the Owner. Compensatory plantation shall be done (if required) by vendor; BRPL shall provide space for the same.

3.2.4. The Contractor shall develop the site area to meet the requirements of the intended purpose. The site preparation shall confirm to the requirements of relevant sections of this specification or as per stipulations of standard specifications.

3.2.5. If fill material is required, the fill material shall be suitable for the above requirement. The fill shall be such a material and the site so designed as to prevent the erosion by wind and water of material from its final compacted position or the in-situ position of undisturbed soil.

3.2.6. Material unsuitable for filling works shall be removed and replaced by suitable fill material and to be approved by the Owner.

3.2.7. Backfill material around foundations or other works shall be suitable for the purpose for which it is used and shall be compacted to the density described under Compaction. Excavated material not suitable or not required for backfill shall be disposed off by the contractor in areas as directed by Owner upto a maximum lead of 5 km. Backfill material if found having mix of earth and fly ash should not be used for top 30 cm of formation level and should be supplemented with earth at the cost of contractor. The old / existing foundations if not required shall be dismantled by the contractor.

3.3. Excavation and Backfill

3.3.1. Excavation and backfill for foundations shall be in accordance with the relevant code.

3.3.2. Whenever water level is met during the excavation, it shall be dewatered and water level shall be maintained below the bottom of the excavation level during excavation, concreting and backfilling. Nothing extra shall be payable by the owner on this account.

3.3.3. When embankments are to be constructed on slopes of 15% or greater, benches or steps with horizontal and vertical faces shall be cut in the original slope prior to placement of embankment material. Vertical face shall measure not more than 1 m in height.

3.3.4. Embankments adjacent to abutments, culverts, retaining walls and similar structures shall be constructed by compacting of the material in successive uniform horizontal layers not exceeding 15 cm in thickness (of loose material before compaction). Each layer shall be compacted as required by means of mechanical tampers approved by the Owner. Rocks larger than 10cm in any direction shall not be placed in embankment adjacent to structures.

3.3.5. Earth embankments of roadways and site areas adjacent to buildings shall be placed in successive uniform horizontal layers not exceeding 20 cm in thickness in loose stage measurement and compacted to the full width specified. The upper surface of the embankment shall be shaped so as to provide complete drainage of surface water at all times.

3.4. Compaction

3.4.1. The density to which fill materials shall be compacted shall be as per, relevant IS and as per direction of Owner. All compacted sand filling shall be confined as far as possible. Backfilled earth shall be compacted to minimum 95% of the Standard Proctor's density at OMC. The sub grade for the roads and embankment filling shall be compacted to minimum 95% of the Standard Proctor's density at OMC. Cohesion less material sub grade shall be compacted to 70% relative density (minimum).

3.4.2. At all times unfinished construction shall have adequate drainage. Upon completion of the roads surface course, adjacent shoulders shall be given a final shaping, true alignment and grade.

3.4.3. Each layer of earth embankment when compacted shall be as close to optimum moisture content as practicable. Embankment material which does not contain sufficient moisture to obtain proper compaction shall be wetted. If the material contains any excess moisture, then it shall be allowed to dry before rolling. The rolling shall begin at the edges overlapping half the width of the roller each time and progress to the center of the road or towards the building as applicable. Rolling will also be required on rock fills. No compaction shall be carried out in rainy weather.

3.5. Requirement for fill material under foundation

3.5.1. The thickness of fill material under the foundations shall be such that the maximum pressure

from the footing, transferred through the fill material and distributed onto the original undisturbed soil will not exceed the allowable soil bearing pressure of the original undisturbed soil. For expansive soils the fill materials and other protections etc. to be used under the foundation has to be approved by the Owner.

4.0 CODES AND STANDARDS

All standards, specifications, acts and code of practice shall be followed. In case of conflict between this specification and those (IS standard/ IRC specification/CPWD Specification, etc.) referred to herein, the former shall prevail.

5.0 SUBMISSIONS

The following documents shall be submitted by the Contractor for approval of the BRPL prior to commencement of fabrication and erection / construction.
This list is not exhaustive but indicative only. Final list of drawings shall be prepared by successful bidder during detailed engineering. Bidder shall submit the qualification details of his licensed Architect & structural engineer (Approved by any Govt organization for detailed engineering/Structural design/approved by Institution of Engineers (India).

i. Design calculation, general arrangement drawings, foundation drawing & detailed erection / construction drawings including R/F drawings for Sub-Station Control Room Building.
ii. Foundation design and drawing of Cable Pot Head.
iii. Foundation design & drawing of all equipment foundations.
iv. Structural steel fabrication drawings for Cable Pot & equipment support structure.
v. Site preparation, filling up to formation level, removal of trees, if any and site cleanliness
vi. Foundation design & drawing of Power Transformer
vii. Design & drawing of transformer grating, firewall & burnt oil tank
viii. Foundation design & drawing for lighting pole.
ix. Foundation design & drawing of Capacitor bank (roof/yard as decided during engineering), Auxiliary Transformer and design of fencing for both.
x. Complete fencing along with gate for the Sub-Station yard
xi. Details of Indoor and Outdoor Cable Trenches with cable tray supports and trench covers
xii. Design & drawing of Rainwater Harvesting System, sewerage system including septic tank, water supply arrangement, landscaping, etc.
xiii. Design & drawing of roads and complete drainage system (with final connection to Rain Water Harvesting recharge pit) within Sub-Station including crossings.
xiv. Design & drawing Security room.
xv. Design & drawing NIFPS system & underground water tank.

6.0 SUB-STATION CONTROL ROOM BUILDINGS GENERAL REQUIREMENTS

6.1. General

6.1.1. The scope includes the design, engineering and construction including anti-termite treatment, plinth protection, DPC of buildings including sanitary, water supply, electrification, fire fighting system, etc. The building shall be of RCC framed structure of minimum concrete grade M25. The Sub-Station Building shall include rooms as specified below:

S. No.	Facility
i	Control & 11kV S/W Room
ii	GIS Hall
iii	Cellar floor
iv	Battery Room, Charger Room, Maintenance room and office rooms
v	Pantry
VI	Toilet (Male & Female separately)
VII	Staircase (for approach till topmost roof slab) including separate staircase for Fire-escape.
VIII	Steel staircase with all safety features for approach till mumty slab

6.1.2. Minimum floor area requirements have been given in tender drawings, which may be increased at the time of detailed engineering to suit project requirements.

6.1.3. An open space of 1200 mm minimum shall be provided on the periphery of the rows of panel and equipment generally in order to allow easy operator movement and access as well as maintenance.

6.1.4. The building shall be aesthetically designed keeping in view the surrounding landscape; proper architecture shall be used to design the exterior look and finish. The architectural drawing shall be submitted for Owner's approval.

6.1.5. Future extension of one floor shall be considered at the time of design. Any other possibility of annex building shall be taken care of while finalizing the layout of the control room building.

6.1.6. Control Room cum Administrative building shall be constructed as per the approved drawings by Owner. CPWD specification shall be followed in all the building works. The clear height of building shall be minimum 4.50 m (from Finish floor level to bottom of roof beam of First floor & Second Floor). The height of GIS hall shall be as per requirement of GIS equipment & EOT.

6.1.7. Cable cellar shall be provided in the building. The clear height of cable caller shall be minimum 3.00 m (from floor level to bottom of roof beam of Ground floor).

6.1.8. Plinth level of sub-station building shall be 750mm above the internal road. Internal road level shall be 750mm above the external main road.

6.2. Design

a) The Building shall be designed on Green Building Concept duly certified by (IGBC Green Service Building rating certification/Svagriha Certification). The design of control room building shall be such decided that's minimum one floor can be added in future.

Following parameters shall be followed: -

- To the requirements of the National Building Code of India and the standards quoted therein. The contractor shall also arrange approval of building from any local authorities such as MCD or fire officer if required so. The official fees shall be born by BRPL.

- For the specified climatic & loading conditions.
- The building shall have framed super structure.
- To adequately suit the requirements of the equipment and apparatus contained in the buildings and in all respects to be compatible with the intended use and occupancy.
- With a functional and economical space arrangement.
- To be aesthetically pleasing. Different structures shall show a uniformity and consistency in architectural design.
- To allow for easy access to equipment and maintenance of the equipment.
- With wherever required, fire retarding materials for walls, ceilings and doors which would prevent supporting or spreading of fire.
- With materials preventing dust accumulation.

b) Suitable expansion joints shall be provided in the longitudinal direction wherever necessary with provision of twin columns.

c) Individual members of the buildings frame shall be designed for the worst combination of forces such as bending moment, axial force, shear force, torsion etc.

d) Permissible stresses for different load combinations shall be taken as per relevant IS Codes.

e) The building lighting shall be designed in accordance with the requirements of relevant section.

f) The building auxiliary services like exhaust and ventilation systems, fire protection and detection systems and all other miscellaneous services shall be designed in accordance with the requirements specified in relevant section or elsewhere in the Specification for the project.

g) Two nos. of emergency exits shall be provided in the building.

6.3. Design Loads

Building structures shall be designed for the most critical combinations of dead loads, super- imposed loads, equipment loads, crane load, wind loads, seismic loads, and temperature loads Dead loads shall include the weight of structures complete with finishes, fixtures and partitions and should be taken as per IS:875. Super-imposed loads in different areas shall include live loads, minor equipment loads, cable trays, small pipe racks & hangers and erection, operation and maintenance loads. Equipment loads shall constitute, if applicable, all load of equipments to be supported on the building frame The wind loads shall be computed as per IS 875, Seismic Coefficient method shall be used for the seismic analysis as per IS 1893 with importance factor 1.5.

For crane loads an impact factor of 25% and lateral crane surge of 10% (of lifted weight + trolley weight) shall be considered in the analysis of frame according to provisions of IS : 875 (latest revision). The longitudinal crane surge shall be 5% of the static wheel load. For temperature loading, the total

temperature variation shall be considered as 2/3 of the average maximum annual variation in temperature. The average maximum annual variation in temperature for the purpose shall be taken as the difference between the mean of the daily minimum temperature during the coldest month of the year and mean of daily maximum temperature during the hottest month of the year. The structure shall be designed to withstand stresses due to 50% of the total temperature variation. Wind and Seismic forces shall not be considered to act simultaneously.

Floors/slabs shall be designed to carry loads imposed by equipment. Floors shall be designed for live loads as per relevant IS codes. Cable and piping loads shall also be considered additionally for floors where these loads are expected.

In addition, beams shall be designed for any incidental point loads to be applied at any point along the beams, the floor loads shall be subject to Owner's approval.

For consideration of loads on structures IS: 875, the following minimum superimposed live loads shall however be considered for the design.

RCC-Floor	5 KN/M2	for offices,
GIS & all Equipments Room Floor	15 KN/M2 (min)	actual requirements if higher than 15KN/M2 based on equipment weight and Layout plan
Stairs & balconies	5 KN/M2	
Chequered plate floor	4 KN/M2	

Any additional load coming in the structure shall be calculated as per IS: 875.

6.4. Submission

The following information shall be submitted for review and approval to the Owner:

a) Design criteria shall comprise the codes and standards used. Applicable climatic data including wind loads, earthquake factors, maximum and minimum temperatures applicable to the building locations, assumptions of dead and live loads, including equipment loads, impact factors, safety factors and other relevant information.

b) Structural design calculations and drawing (including construction/fabrication) for all reinforced concrete and structural steel structures.

c) Fully, dimensioned concept plan including floor plans, cross sections, longitudinal sections, elevations and perspective view of each building. These drawings shall be drawn at a scale not smaller than I : 50 and shall identify the major building components.

d) Fully dimensioned drawings showing details and sections drawn to scales of sufficient size to clearly show sizes and configuration of the building components and the relationship between them.

e) Product information of building components and materials, including walls partitions flooring ceiling, roofing, door and windows and building finishes.

f) A detailed schedule of building finishes including color schemes.

g) A door & window schedule showing door types and locations, door lock sets and latch sets and other door hardware.

h) Copy of all tests/ studies/ investigation carried out by bidder as per scope.

Approval of the above information shall be obtained before ordering materials or starting fabrication or construction as applicable.

6.5. Flooring

Flooring in various rooms of control room building shall be as per detailed schedules given in Table – 1. Pantry countertop shall be of granite stone of required specification as per direction of Engineer-In-Charge.

2. Providing and fixing Raised Access Flooring .The Access raised floor shall be heavy grade UNIFLOOR FS800H with point load of 3.6KN/over 25mm sq. and UDL of 15 KN /M2 panels manufactured from steel with lightweight cementitious core in the size 600x600x35mm.The bottom of the panel shall be embossed in hemispherical shape to give strength and flexural rigidity on the exposed surface for lifetime protection and shall be zinc whisker free. The panel has to be placed on the pedestal base plate 100x100x8mm x 25mm solid road 450mm/600MM height 75x75x4mm mm top plate made from all steel zinc plated construction. Pedestal assembly shall provide for easy adjustment of leveling and accurately align panels to ensure lateral restrain. Pedestal head shall be designed to avoid rattle or squeaks. The steel base plate of the pedestal shall be fixed on to the sub-floor with epoxy pedestal adhesive and /or mechanical fixing. An all-steel rectangular stringer system having pre punched holes at both ends to ensure correct alignment with pedestal heads be applied for maximum stability. The panel shall be finished with high abrasion anti-static HPL in size 600x600x0.9mm with beading on all sides to provide protection of edges as per Drawings and as per Manufacturers recommendations. Providing Heavy Duty Double Suction Panel Lifter is included in item. Grommets for Easy Cable Access shall be provided as per design wherever required.
600 mm Finished Floor Height (FFH)

6.6. Walls

Control room building shall be of framed superstructure. All walls shall be non-load bearing walls. Minimum thickness of walls shall be 340mm upto DPC level in cement mortar 1:4 (1 Cement: 4 Coarse sand) and 230mm above DPC level in cement mortar 1: 4 (1 Cement: 4 coarse sand). Parapet walls (Incl. s/stn building and mumty) shall be 230 mm thick and 1100mm high from top of roof treatment. 50 mm CC coping to be provided on parapet walls.

6.7. Plastering

All internal walls shall have minimum 12mm/ 15mm thick 1:4 (1 Cement : 4 coarse Sand) cement sand plaster. The ceiling shall have 6mm thick 1:3 cement sand plaster.

6.8. Finishing

All external surfaces (S/stn building, boundary wall and other structures) shall have Texture finish of Make UTTPL (Ultratech Texture Paints Pvt. LTD) as per below detail:

- Building area: GRANITE ATELOI SA – 36-50% LIGHT
- Beam/ column: GRANITE ATELIO SA – PINK

Granito Attiloe:
Application Process:
Thickness 1.5- 1.8mm
1. Applying Priming coat of acrylic Primer mixed with wall sealer & water in the ratio of (1:1).
2. Repair check of plaster surface with Exterior grade cement mixed with Primer. (Whereas cement is provided by client on FOC basis).
3. First coat to obtain highly dense smooth appearance of 0.5 to .7 mm thick by applying over the primer to be applied with spray / trowel depends upon the
surface.
4. Second coat of 100% natural crushed granite material 0.8 to .9 mm thick by applying a
spray gun with a pressure of 2bhp to achieve desired finish.
5. Two coat of water base Protective.

6.9. False Ceiling

a) Providing and fixing false ceiling at all height including providing and fixing of frame work made of special sections, power pressed from M.S. sheets and galvanized with zinc coating of 120 gms/sqm (both side inclusive) as per IS : 277 and consisting of angle cleats of size 50mm length x 50 mm wide x 3.0 mm thick with flanges of at 1200 mm centre to centre, one flange fixed to the steel truss members and other flange of cleat fixed to the angle hangers of 50x50x3 mm of required length with nuts & bolts of required size and other end of angle hanger fixed with intermediate G.I. channels 45x15x0.9 mm running at the spacing of 1200 mm centre to centre, to which the ceiling section 0.5 mm thick bottom wedge of 80 mm with tapered flanges of 26 mm each having lips of 10.5 mm, at 450 mm centre to centre, shall be fixed in a direction perpendicular to G.I. intermediate channel with connecting clips made out of 2.64 mm dia x 230 mm long G.I. wire at every junction, including fixing perimeter channels 0.5 mm thick 27 mm high having flanges of 20 mm and 30 mm long, the perimeter of ceiling fixed to wall/partition with the help of rawl plugs at 450 mm centre, with 25mm long dry wall screws @ 230 mm interval, including fixing of gypsum board to ceiling section and perimeter channel with the help of dry wall screws of size 3.5 x 25 mm at 230 mm c/c, including jointing and finishing to a flush finish of tapered and square edges of the board with recommended jointing compound , jointing tapes , finishing with jointing compound in 3 layers covering upto 150 mm on both sides of joint and two coats of primer suitable for board, all as per manufacturer's specification and also including the cost of making openings for light fittings, grills, diffusers, cutouts made with frame of perimeter channels suitably fixed, all complete as per drawings, specification and direction of the Engineer in Charge .
12.0 mm thick tapered edge calcium silicate board is to be provided.(In control Room)

b) False ceiling in armstrong fine fissured butt edge tiles 595x595mm : Providing & fixing of armstrong fine fissured butt edge tile ceiling complete in all respects using armstrong channels, hangers etc. Item complete with all edge cut tiles and required cutting for lights, speakers, detectors, diffures, etc. Tile code-Armstrong fine fissured NF Butt edge (RH 99E)

c) False ceiling in gypsum board : P/F false ceiling, drops, ceiling " design in gypsum board. Providing and fixing at all heights false ceiling of 12.5MM thick tapered edge gypsum board confirming to IS: 2095 including providing and fixing of frame work made of special sections power pressed from MS Sheet and galvanized in accordance with Zinc coating 600 as per IS: 277 and consisting of angel cleats of size 25mm wide X 16mm thick with flanges of 22mm and 37mm at 1200 center to center one flange fixed to the ceiling with dash fastener 12.5mm DIA 40mm

6.10. Doors, Windows and ventilators

The details of doors and windows of the sub-station building shall be as under:

.

a) Steel door: Steel doors with Door Frames made with 1.5 mm (16 gauge) thick galvanized steel sheet pressed multi bend to S/L Rebate of Size 120 x 60 mm and Door Shutter shall be made with 18 gauge thick GI sheet pressed formed to provide a 46 mm thick fully flushed Door leaf skin panel shell with lock seam joint at stile edges and filled with Honey comb structure with metallic reinforcement at top, bottom and side surroundings. The item also includes the provision for required iron mongery and Powder coated Finish in RAL Color shades.
Each door leaf with 4 hinges (Make- Dauerhaft/ Hafele/ Equivalent), 1 no.of Door closure (make- Dauerhaft/ Hafele/ Equivalent), 1 no. of external trim (make- Dauerhaft/ Hafele/ Equivalent), , 1 no. Three Point Panic Bar (Make-Dauerhaft / Hafele/ equivalent) with necessary screws etc all complete.

b) Fire proof doors: Providing and fixing of Hollow metal fire rated doors as per IS 3614 part-1 & part-2 for stability and integrity. Pressed Galvanized steel confirming to IS 277 with the following specification. Recommended fire door should have been tested earlier of similar design at CBRI for maximum rating of 2hrs tested with vision panel of minimum 0.1 Sqmtr per shutter as requirement & application. Individual Test certificates should also be available for glass used in vision lites confirming the required fire ratings /panels being a part of the fire door assembly. Doors should be finished in Thermosetting Powder Coating desired RAL Shades. Manufacturer test certificate shall cover doors both single & double leaf doors and Hardwares should pass European certificate "CE" of conformity / UL with required fire ratings. Any deviation in specification and sheet thickness other than what is mentioned in the test certificates are not allowed. Proper label confirming the type of door and the hourly rating is mandatory. The manufacturer should be compliant to ISO 9001: 2008 and CE certified, manufacturer should be covered under IGBC scheme. Door frame shall be double rebate profile of minimum size 154mm X 77 mm made out of 1.60mm (16gauge) minimum thick galvanized steel sheet. NDRF 154x77 Frames shall be Butt jointed and field assembled with self bolted. The frames should be finished with Thermosetting Powder Coating in desired RAL Shade. All provision should be mortised, drilled and tapped for receiving appropriate hardware. Frames should be provided with back plate bracket and anchor fasteners for installation on a finished plastered masonry wall opening.
Door leaf shall be minimum 49mm thick fully flush double skin door with or without vision lite. Door leaf shall be manufactured from 1.25mm (18guage) minimum thick galvanised steel sheet. The internal construction of the door should be rigid reinforcement pads for receiving appropriate hardware. The infill material shall be Rockwool treated with Viper FRS 881 LH. All

doors NSD 12049 shall be factory prepped for receiving appropriate hardware and provided with necessary reinforcement for hinges, locks, and door closers. The edges should be interlocked with a bending radius of 1.4mm. For pair of doors astragals has to be provided on the meeting stile for both active and inactive leaf. Vision lite wherever applicable should be provided as per manufacturers recommendation with a beeding and screws from inside. However the glass should be contraflam Door Lite 11 mm clear 120 min fire rated and partially insulated (EW120), Non Wired Toughened, interlatered glass having a sound reduction of >37dB, LT of 86% and compliant to class 2(B)2 category of Impact Resistance as per EN 12600 standard from Saint Gobain.
Each door leaf with 4 hinges (Make- Dauerhaft/ Hafele/ Equivalent), 1 no.of fire rated Door closure (make- Dauerhaft/ Hafele/ Equivalent), 1 no. of external trim (make- Dauerhaft/ Hafele/ Equivalent), 1 Fire Rated Wired Glass(200x300mm), (Make-Pilkington/ equivalent), 1 no. Three Point Panic Bar (Make-Dauerhaft / Hafele/ equivalent) with necessary screws

c) Aluminium Doors, Windows & Ventilators: Aluminium doors, Windows & Ventilators are Powder coated Aluminium Hindalco/ Jindal or equivalent extruded sections (minimum 3.0 mm thick) as per IS 733 & 1285 for windows and ventilators (minimum thickness of powder coating 50 micron of approved colour). Glazing for windows and ventilators will be hermetically sealed double glazing (DGU) with (6+12+6) i.e. 06 mm clear toughened glass +12 mm air gap + 6 mm toughened Glass (Heat reflective colour glass).

Door/ Window frame	101.60x44.50x3.18mm Code: 20011(Jindal)
Door/ Window Shutter	83.50x44.45x3.18mm Code: 19583 (Jindal)
Door/Windows middle section	83.50x44.45x3.27mm Code: 19593 (Jindal)
Square Tube Inside window Beading	25x25x2mm
Beading in Doors	Code: 19377 (Jindal)
Ventilator frame	101.60x44.50x3.18mm Code: 20011(Jindal)
Ventilator Middle frame	101.60x44.50x3.18mm Code: 20010 (Jindal)
Ventilator outerside beading Angle	35x35x2mm
Square Tube Inside ventilator Beading	25x25x2mm

d) Doors in various rooms of control room building shall be as per detailed schedules given in Table – 1. All entrance doors at ground floor/ cellar shall be steel doors. Partition door between adjacent panel rooms shall be 2 hours fire rated

e) The details for all other doors and windows shall be as per finish schedule Table-I and tender Drawings with the relevant IS code.

f) Floor springs and hydraulic door closer of make Dorma or equivalent to be provided.

g) To maintain proper size of opening for doors and windows, contractor shall provide rough round Aluminum tube of size 40 x 20 mm around all opening before plaster work.

h)The contractor shall provide a door and window sill of granite stone of size 18-20 mm.

i) All windows at ground floor/ cellar shall be provided with MS Grill.

6.11. Internal Electrification

Electrical wiring shall be through heavy duty concealed conduits. All fixtures and wiring shall be of best quality and ISI marked. (Fixtures shall be provided as per provision of energy conservation act). Internal wiring shall include all fittings and fixtures, control panel boards, main switch MCB's, etc.

6.12. Plumbing & Sanitation

a) All plumbing and sanitation works shall be executed to comply with the requirements of the appropriate bye-laws, rules and regulations of the Local Authority having jurisdiction over such matters. The Contractor shall arrange for all necessary formalities to be met in regard to inspection, testing, obtaining approval and giving notices etc.

b) PVC sintex or equivalent make Roof water tank of adequate capacity depending on the number of users for 24 hours storage shall be provided. Minimum 2 Nos. 1000 liters capacity shall be provided.

c) CPVC pipes & Fittings shall be used for internal & external piping (both concealed) work for potable water supply.

d) UPVC pipes shall be used for sanitary works above ground level.

e) Each toilet shall have minimum fittings

i) Wall Hung Water closet (European type W.C. pan) Jaquar/Kohler as per approval of Engineer In charge

ii) Half Stall Urinal (580 x 380 x 350 mm) Jaquar/Kohler as per approval of Engineer Incharge

iii) Counter top Wash basin (630 x 450 mm) Jaquar/Kohler as per approval of Engineer Incharge

iv) Bathroom mirror (600 x 450 x 6 mm thick) hard board backing

v) CP brass towel rail (600 x 20 mm) with C. P. brass brackets.

vi) Soap holder and liquid soap dispenser.

f) Water cooler for drinking water with adequate water storage facility shall be provided and located near control room instead of near toilet block.

g) 1 No stainless steel A ISI 304(18/8) kitchen sink with Drain board (510 x 1040 x 225mm bowl depth as per IS 13893 for pantry shall be provided complete with all fittings

h) All fittings, fastener, grating shall be chromium plated.

i) All sanitary fixtures and fittings shall be of approved quality and type manufactured by well known manufacturers. All items brought to site must bear identification marks of the type of the Manufacturer.

j) Soil, waste and drain pipes, for underground works shall be UPVC Pipes for areas not subject to traffic load. Heavy-duty cast iron pipes/ RCC NP-04 Pipes shall be used otherwise.

7.0 STORM WATER DRAINAGE FOR CONTROL ROOM BUILDING

The building drain shall be provided for the collection of storm water from the roofs. This water shall be collected in chambers and these chambers shall drain to the main drainage system of the station which shall in turn be connected to rain water harvesting recharge pits. Overflow of RWH Pits shall be connected to main drain

G.I Pipes of 150 MM dia rain water down comers shall be provided to drain off the rain water from the roof.. The number and size of down comers shall be governed by IS:1742 and IS:2527. Pipe will be covered by making suitable arrangement in structure and to be matched with external Finishes.

All external drains shall be covered with precast perforated RCC covers of suitable size and thickness.

For all buildings, suitable arrangement for draining out water collected from equipment blow down, leakages, floor washings fire fighting etc. shall be provided for each floor.

8.0 DEVELOPMENT OF YARD

8.1. Scope

8.1.1. The Contractor shall furnish all labour, equipments and materials required for complete performance of the work in accordance with the drawings, specifications and direction of the Owner.

8.1.2. Stone spreading shall be done in the Outdoor Sub-Station Yard area, Power Transformer, Capacitor Bank and wherever equipments and structures are to be provided under the present scope of work.

General Requirement:

The material required for site surfacing / stone filling shall be free from all types of organic materials and shall be of standard quality and as approved by the Owner.

Test for aggregates should be as follows:

a) Sieve Analysis limits (Gradation)

As per IS: 383-1970

The material to be used for stone filling / site surfacing shall be uncrushed / crushed / broken stone of 20 mm nominal size (ungraded single size) conforming to Table 2 of IS:383 - 1970.

Sieve Analysis (Gradation):
(IS: 383 - Table - 2)

Sieve size	% passing by weight
40mm	100
20mm	85-100
10mm	0 – 20
4.75mm	0-5

One test shall be conducted for every 50 cum.

b) Hardness:

Abrasion value (IS: 2386 Part-IV) - not more than 40%
Impact value (IS: 2386 Part-IV) - not more than 30% and frequency shall be one test per 50 cum with a minimum of one test per source

c) Flakiness Index

As per IS: 2386 Part I

8.1.3. Before taking up the final yard treatment, anti-weed treatment shall be applied in the switchyard area wherever yard treatment is to be done, and the area shall be thoroughly de-weeded including removal of roots. The recommendation of local agriculture or horticulture department shall be sought wherever feasible while choosing the type of chemical to be used. Nevertheless the effectiveness of the chemical shall be demonstrated by the contractor in a test area of 10M x 10M (approx.) and monitored over a period of two to three weeks by the Engineer-in-Charge. The final approval shall be given by Engineer-in-Charge and final approval given based on the results.

8.1.4. The anti-weed chemical shall be procured from reputed manufacturers. The dosage and application of chemical shall be strictly followed as per manufacturer's recommendation. The contractor shall be required to maintain the area free of weeds for a period of 1 year from the date of application of 1st dose of anti-weed chemicals

8.1.5. After all the structures/equipments are erected and anti-weed treatment is complete, the surface of the substation area shall be maintained, rolled/compacted to the lines and grades as decided by Engineer-in-Charge. De-weeding including removal of roots shall be done before rolling is commenced. Engineer-in-Charge shall decide final formation level so as to ensure that the site appears uniform free from undulations. The final formation level shall however be very close to the formation level using manual or machine roller with suitable water sprinkling arrangement to form a smooth and compact surface.

8.1.6. After anti-weed treatment & compaction of earth, final yard treatment shall be Carried out in the 4 layers as follows:

a. Providing and laying in position 75mm thick base layer of cement concrete 1:5:10 (1 cement: 5 coarse sand : 10 brick aggregate 40mm nominal size).

b. Flat brick flooring with over burnt bricks /class designation 100 as per approval of BRPL on the bed of 12 mm thick cement mortar 1:6 (1 cement : 6 coarse Sand) and filling the joints 12mm thick all around the bricks with same mortar.

c. Over the flat brick flooring a layer a final surface course of minimum 100 mm thickness of 20 mm nominal size (single size ungraded) broken stone shall be spread and uniformly leveled.

8.1.7. In areas that are considered by the Engineer-in-Charge to be too congested with foundations and structures for proper rolling of the site surfacing material by normal rolling equipments i.e., clear space between any 02 adjacent structures/foundation less than 01 meter, these adjoining structures/foundations shall constructed as a monolithic structure.

8.1.8. The sub grade shall be in moist condition at the time the cement concrete is placed. If necessary, it should be saturated with water for not less than 6 hours but not exceeding 20 hours before placing of cement concrete. If it becomes dry prior to the actual placing of cement concrete, it shall be sprinkled with water and it shall be ensured that no pools of water or soft patches are formed on the surface.

9.0 SUB-STATION TRENCHES

9.1. The cable trenches and precast removable RCC cover (with lifting arrangement) shall be constructed using RCC of minimum grade M25.

9.2. The RCC cable trench walls and raft shall not be less than 150 mm thick.

9.3. The cable trench wall shall be designed for the following loads.

- Dead load of 155 kg/m length of cable support + 75 Kg on one tier at the end.(Wall thickness Minimum-150 mm)
- Triangular earth pressure + uniform surcharge pressure of 2T/m2.

9.4. Cable trench covers shall be 50 mm thick. All trench covers/ drain covers shall have desired IRC Mesh of size 75x25mm (wire size 6 gauge/ 7.75 kg/m2) welded to M.S. frame of angle 50 x 50 x 6 mm all round the cover. Size of covers shall be as per site requirement / direction of Engineer in Charge.

9.5. Size of covers shall be per site requirement / direction of Engineer In Charge.

9.6. All cable trenches inside the buildings shall have covers comprising of 6 mm thick chequered plates fixed on angle 40 x 40 x 5 mm frame with arrangement of MS holes for lifting of cover.

9.7. Cable trench crossing the road/rails shall be designed for class AA loading of IRC/relevant IS Code and should be checked for transformer/reactor loading.

9.8. Trenches shall be drained. Necessary sumps be constructed and submersible sump pumps with stand by arrangement shall be supplied/ installed. Cable trenches shall not be used as storm water drains.

9.9. The top of cable trench shall be such that the surface rain water does not enter the trench.

9.10. All metal parts inside the trench shall be connected to the earthing system.

9.11. The trench bed shall have a perpendicular to the run. Trench wall shall not foul with the foundation. Suitable clear gap shall be provided.

9.12. The trench bed shall have a slope of 1/500 along the run & 1/250 perpendicular to the run.

9.13. All the construction joints of cable trenches i.e. between base slab to base slab and the junction of vertical wall to base slab as well as from vertical wall to wall and all the expansion, joints shall be provided with approved quality PVC water stops of approx. 230 x 5 mm size for those sections where the ground water table is expected to rise above the junction of base slab and vertical wall of cable trenches.

9.14. Cable trenches shall be blocked at the ends if required with brick masonry in cement sand mortar 1:6

and plaster with 12mm/15mm thick 1:4 cement sand mortar.

9.15. Construction of Cable Trench 11Kv & 66Kv upto the plot boundary wall shall be in the scope of Vendor.

10.0 SUB-STATION DRAINAGE SYSTEM

Adequate site drainage system shall be provided by the Contractor. The Contractor shall design the storm water drainage system covering all culverts, ditches, drains, etc. The run off shall be calculated on the basis of maximum rainfall intensity that is likely to occur over the catchment area in one hour period on an average of once in ten years. The surface of the site shall be sloped to prevent the ponding of water. Outfall of drainage shall be suitably connected to rainwater harvesting recharge pits. While designing the drainage system following points shall be taken care of:

1. The maximum velocity for pipe drains and open drains shall be limited to 2.4m/sec and 1.8m/sec respectively. However, minimum non-silting velocity of 0.6m/sec shall be ensured. Longitudinal bed slope not milder than 1 in 1000 shall be provided.

2. For design of RCC pipes for drains and culverts, IS: 456 and IS: 783 shall be followed.

3. The Contractor shall ensure that water drains are away from the site area and shall prevent damage to adjacent property by this water. Adequate protection shall be given to site surfaces, roads, ditches, culverts, etc. to prevent erosion of material by water.

4. For pipe drains, concrete pipe of class NP3 shall be used. However, for road crossings etc. higher strength pipe of class NP4 shall be provided. For rail crossings, pipes conforming to railway loading standards or at least NP4 class shall be provided. Manholes shall be provided at every 30m interval, at connection points and at every change of alignment.

5. Pipe drains shall be connected through manholes at an interval of maximum 15mtrs. Effluents shall be suitably treated by the Contractor to meet all the prevalent statutory requirements and local pollution control norms and treated effluents shall be conveyed to the storm water drainage system at a suitable location for its final disposal.

6. All internal site drainage system, including the final connection/disposal to rainwater harvesting recharge pits shall be part of Contractor's scope including all required civil work, mechanical & electrical systems. The Contractor shall connect drain(s) at one or more points to rainwater harvesting recharge pits as feasible at site. The drainage layout of the substation shall be approved by the Owner & all works shall be carried out by the Contractor.

7. The drainage scheme and associated drawings shall be got approved from the Owner.

11.0 SUB-STATION ROAD

11.1. Inside substation roads to be provided for access along with car parking for at least three cars and two wheeler parking for three vehicles. Building, Roads and parking are in the scope of bidder. Layout of the roads shall be based on layout drawing for the substation. Parking areas shall be provided for Site personnel and visitors as per layout drawing. Adequate turning space for vehicles shall be provided and bend radius shall be set accordingly. It has to be connected suitably with roads.

11.2. All substation roads shall be constructed so as to permit transportation of all heavy equipment up to 60MT. The main approach roads upto Control Room Building and other relevant roads will be RCC/ Cement Concrete Roads. The other connecting roads and pathways shall be of Paver blocks/ CC Road as per site requirement. The pavers blocks used for the roads shall be minimum 80mm thick with compressive strength not less than 450Kg/cm2.

11.3. Road construction shall be as per IRC standard.

11.4. Adequate provision shall be made for road drainage.

11.5. All the culverts and its allied structure (required for road/rail, drain trench crossings etc.) shall be designed for class AA loading as per IRC standard/IS code.

TRANSFORMER FOUNDATION, RAIL TRACK/ ROAD CUM RAIL TRACK

11.6. The Contractor shall provide a permanent transfer track system integrated with the power transformer foundation to enable installation and replacement of any failed unit by the spare unit located at the site. The transfer track system shall be suitable to permit the movement of any failed unit fully assembled with integral radiators and oil, without the de-energization of any other equipment in the station. This system shall enable the removal of any failed unit from its foundation to a repair area and the installation of the spare unit. This system, preferably, shall not interfere with the normal internal road and trench system. If trench/ drain crossings are required then suitable RCC culverts shall be provided in accordance with I.R.C Code/ relevant IS.

11.7. Rail track to be provided for all PTR foundations upto Grid Main Entry gate and shall be minimum of RCC M-25 grade. The space between the tracks shall be suitably filled with Concrete M-25. up to the formation level.. Suitable drainage system between the tracks shall be provided.

11.8. The rails shall be of first quality 52 kg/m medium manganese steel as per Indian Railway specification T-12-64 and its subsequent revision, joined together by fish plates as per Indian Railway specification T-1/57 and their drawing no. 090M and 27mm diameter fish bolts. No joint shall be provided at less than L/3 of the longest part.

11.9. The grating shall be made of MS flat of size 50mmx 5mm placed at 30mm center to center welded inclined (sideways) at an angle of 45-60 degrees from horizontal axis and 25mmx5mm MS flat at a spacing of 150mm at right angle to each other. Maximum length of grating shall be 1500mm and width shall not be more than 500mm. The gratings supported on ISMB 150mm shall be placed at the formation level and will be covered with 100mm thick layer of broken/crushed/non-crushed stone having size 40mm to 60mm which acts as an extinguisher for flaming oil.

12.0 OIL RECOVERY & BURNT OIL TANK

12.1. The oil recovery system shall be provided for all transformers (containing insulating oil or any flammable or polluting liquid) in order to avoid spread of fire by the oil and for environmental protection.

12.2. Each transformer including oil conservator tank and cooler banks etc. shall be placed in a transformer pit surrounded by retaining walls (pit walls). The clear distance of the retaining wall from the

transformer shall be 20% of the transformer height or 0.8m whichever is more. The transformer pit thus formed shall have a capacity equal to volume of oil in the transformers. The MS grating placed at the formation level shall be covered with 100mm thick gravel of 40mm nominal size which acts as an extinguisher for flaming oil.

12.3. Each transformer pit shall be drained towards a sump pit whose role is to recover the infiltrating water and the drained oil from the pit. The sump pit shall have sufficient capacity to receive without overflowing the oil content of large transformers plus the water content of any fixed fire fighting system and a certain quantity of rain water collected from the pit connected to it. The system shall be provided with air vents large enough to avoid over- pressure during operation. The whole internal surface of the sump pit should be impermeable.

12.4. The retaining walls which make up the transformer pit shall be made of reinforced cement concrete, with minimum grade of concrete as M-25.

12.5. The floor of the transformer pit shall be of Reinforced cement concrete of grade M25.

12.6. A Device showing level of sump pit shall be fitted along with the automatic submersible pumping system, which shall have sufficient capacity to evacuate the fire fighting & rainwater from the sump pit..

12.7. If the heights of the retaining wall which form the transformer pit exceed 60cm, steps shall be provided to facilitate access to the transformer and reactor.

12.8. When designing the transformer pit, the movement of the transformer must be taken into account.

12.9. It must be assured that the coefficient of crushed stone (granular material) penetration which fills the transformer pit will be retained regardless of the climatic conditions.

13.0 FIRE PROTECTION WALLS

13.1. General

13.1.1. Fire protection walls shall be provided, wherever required, in accordance with Tariff Advisory Committee (TAC) and certifying all mandatory safety clearances.

13.2. Material

13.2.1. The firewall shall be made up of reinforced cement concrete (at least M-25 grade) as per the system requirements. Materials used must conform to the standards of the National Fire Prevention Association & TAC Norms.

13.3. Fire Resistance

13.3.1. The firewall shall have a minimum fire resistance of 3 hours. The partitions, which are made to reduce the noise level of the transformers, shall have the same fire resistance where the partitions are also used as firewalls. The walls of the building, which are used as firewalls, shall also have a minimum fire resistance of 3 hours.

13.3.2. The firewall shall be designed to protect against the effect of radiant heat and flying debris from an adjacent fire.

13.4. Dimensions

13.4.1. The barrier shall extend at least 500 mm above the transformer bushing and pressure relief vent and length wise 600 mm beyond the transformer including any radiators and tap changer enclosure.

13.4.2. These dimensions might be reduced in special cases, as per the approval of owner where there is lack of space. A minimum of 2.0 meter clearance shall be provided between the Equipments e.g. Autotransformer/Power transformer.

13.4.3. The building walls, which act as firewalls, shall extend at least 1 m above the roof in order to protect it. Building wall adjacent to transformer shall act as fire resistance wall and shall be made up of solid concrete blocks

13.5. Mechanical Resistance

13.5.1. The firewall shall have the mechanical resistance to withstand local atmosphere conditions. If this wall shall serve as a support for equipment such as insulators etc, it mechanical rigidity must be increased. Connecting the walls by steel or other structures which may produce a reversing torque if overheated shall be avoided.

14.0 DESIGN CONSIDERATION FOR FOUNDATION

14.1. General

14.1.1. Work covered under this Clause of the Specification comprises the design and construction of foundations and other RCC constructions for switchyard structures, equipment supports, trenches, drains, jacking pad, pulling block, control cubicles, bus supports, Power transformer/Reactors, marshalling kiosks and auxiliary equipments, tanks or for any other equipment or service and any other foundation required to complete the work. This clause is as well applicable to the other RCC constructions.

14.1.2. Concrete shall conform to the requirements mentioned in IS: 456 and all the tests shall be conducted as per relevant Indian Standard Codes as mentioned in Standard field quality plan appended with the specification. A minimum grade of M25 concrete shall be used for all structural/load bearing members as per latest IS: 456 (latest revision).

14.1.3. If the site is sloppy, the foundation height will be adjusted to maintain the exact level of the top of structures to compensate such slopes.

14.1.4. The switchyard foundation's plinths shall be minimum 300mm above finished yard level.

14.1.5. Minimum 100mm thick lean concrete (1:4:8) shall be provided below all underground structures, foundations, trenches etc. to provide a base for construction.

14.1.6. Concrete made with Ordinary Portland cement shall be carefully cured and special importance shall be given during the placing of concrete and removal of shuttering.

14.1.7. The design and detailing of foundations shall be done based on the approved soil data and sub-soil conditions as well as for all possible critical loads and the combinations thereof. The Spread footing or pile foundation as may be required based on soil/sub-soil conditions and

superimposed loads shall be provided.

14.1.8. If pile foundations are adopted, the same shall be cast-in-situ driven/bored or precast or under reamed type as per relevant. parts of IS Code 2911. Only RCC piles shall be provided. Suitability of the adopted pile foundations shall be justified by way of full design calculations. Detailed design calculations shall be submitted by the bidder showing complete details of piles/pile groups proposed to be used. Necessary initial load test shall also be carried out by the bidder at their cost to establish the piles design capacity. Only after the design capacities of piles have been established, the Contractor shall take up the job of piling. Routine tests for the piles shall also be conducted. All the work (design & testing) shall be planned in such a way that these shall not cause any delay in project completion. The contractor shall go for vertical load testing or lateral load testing. The contractor may choose static or dynamic load testing upon site condition and time constraint.

14.2. Design

14.2.1. All foundation shall be of reinforced cement concrete. The design and construction of RCC structures shall be carried out as per IS: 456 and minimum grade of concrete shall be M-25.

14.2.2. Limit state method of design shall be adopted unless specified otherwise in the specification.

14.2.3. For detailing of reinforcement IS: 2502 and SP: 16 shall be followed. TMT bars conforming to IS: 1786 shall be used as reinforcement. However, in specific areas mild steel (Grade I) conforming to IS: 432 can also be used. Two layers of reinforcement (on inner and outer face) shall be provided for wall & slab sections having thickness of 125 mm and above. For footings minimum cover shall be 50 mm.

14.2.4. RCC water retaining structures like storage tanks, etc. shall be designed as uncracked section in accordance with IS: 3370 (Part I to IV) by working stress method. However, water channels shall be designed as cracked section with limited steel stresses as per IS: 3370 (Part I to IV) by working stress method. Joints on each concrete lift shall be provided with approved quality PVC water stops of approx. 230 x 5 mm size to avoid water seepage through those joints

14.2.5. The procedure used for the design of the foundations shall be the most critical loading combination of the steel structure and or equipment and/or superstructure and other conditions, which produces the maximum stresses in the foundation or the foundation component and as per the relevant IS Codes of foundation design. Detailed design calculations shall be submitted by the bidder showing complete details of piles/pile groups proposed to be used.

14.2.6. Design shall consider any sub-soil water pressure that may be encountered following relevant standard strictly.

14.2.7. Necessary protection to the foundation work. If required shall be provided to take care of any special requirements for aggressive alkaline soil. Black cotton soil or any other type of soil which is detrimental / harmful to the concrete foundations.

14.2.8. RCC columns shall be provided with rigid connection at the base. All columns shall be interconnected with RCC beams at Footing Level from all possible Directions/Suitable size

raft footing will be provided.

14.2.9. All sub-structures shall be checked for sliding and overturning stability during both construction and operating conditions for various combinations of loads. Factor of safety for these cases shall be taken as mentioned in relevant IS Codes as stipulated elsewhere in the Specifications. For checking against overturning, weight of soil vertically above footing shall be taken and inverted frustum of pyramid of earth on the foundation should not be considered.

14.2.10. Earth pressure for all underground structures shall be calculated using coefficient of earth pressure at rest. Co-efficient of active or passive earth pressure (whichever is applicable). However, for the design of substructures of any underground enclosures, earth pressure at rest shall be considered.

14.2.11. In addition to earth pressure and ground water pressure etc., a surcharge load of 2T/Sq.m shall also be considered for the design of all underground structures including channels, sumps, tanks, trenches, and substructure of any underground hollow enclosure etc, for the vehicular traffic in the vicinity of the structure.

14.2.12. Following conditions shall be considered for the design of water tank in pumps house, channels, sumps, trenches and other underground structures:

a) Full water pressure from inside and no earth pressure, ground water pressure & surcharge pressure from outside (application only to structures, which are liable to be filled up with water or any other liquid).

b) Full earth pressure, surcharge pressure and ground water pressure from outside and no water pressure from inside.

c) Design shall also be checked against buoyancy due to the ground water during construction and maintenance stages. Minimum factor of safety of 1.5 against buoyancy shall be ensured ignoring the superimposed loadings.

14.2.13. Base slab of any underground enclosure shall also be designed for empty condition during construction and maintenance stages with maximum groundwater table (GWT). Minimum factor of safety of 1.5 against buoyancy shall be ensured ignoring the super-imposed loadings.

14.2.14. Base slab of any underground enclosure like water storage tank shall also be designed for the condition of different combination of pump sumps being empty during maintenance stages with maximum GWT. Intermediate dividing piers of such enclosures shall be designed considering water in one pump sump only and the other pumps sump being empty for maintenance.

14.2.15. The foundations shall be proportioned so that the estimated total and differential movements of the foundations are not greater than the movements that the structure or equipment is designed to accommodate.

14.2.16. The foundations of transformer shall be of block type foundation. Minimum reinforcement shall be governed by IS: 2974 and IS: 456.

14.2.17. The equipment foundations shall be checked for a factor of safety of 2.2 for normal condition and 1.65 for short circuit condition against sliding, overturning and pullout. The same factors shall be used as partial safety factor over loads in limit state design also.

14.3. Admixture & Additives

14.3.1. Only approved admixtures shall be used in the concrete for the Works. When more than one admixture is to be used, each admixture shall be batched in its own batch and added to the mixing water separately before discharging into the mixer. Admixtures shall be delivered in suitably labeled containers to enable identification.

14.3.2. Admixtures in concrete shall conform to IS: 9103. The waterproofing cement additives shall conform to IS: 2645. Owner shall approve concrete Admixtures/ Additives.

14.3.3. The contractor may propose and the Owner may improve the use of a water-reducing set-retarding admixture in some of the concrete. The use of such an admixture will not be approved to overcome problems associated with inadequate concrete plant capacity or improperly planned placing operation sand shall only be approved as an aid to overcoming unusual circumstances and placing conditions.

14.3.4. The water-reducing set-retarding admixture shall be an approved brand of Ligno-sulphonate type admixture.

14.3.5. The waterproofing cement additives shall be used as required/advised by the Owner.

14.3.6. Water proofing treatment on roof shall be as per Item No 22.7.1 - DSR 2012.

15.0 FENCING OF SUB-STATION (LIVE PART) AREA

15.1. General

Fencing shall be designed for the most critical loading combination taking care of wind force, stability, tension on wires, minimum requirements as per this clause for are materials IS 8910 and fabrication IS 800 as per recommendations

15.2. Areas Requiring Fencing

15.3. Fencing shall be providing for the following areas:

15.3.1. Site fencing for the complete Outdoor substation Yard area including Power transformer area. Gates shall be provided for men and machine / equipment to be taken out of the substation.

15.3.2. The IRC weld mesh Panels fencing of Capacitor Bank with roof cover (as per approved BRPL pattern).

15.3.3. Fencing of Aux. Substation Transformer (as per approved BRPL pattern).

15.4. Product Material

15.4.1. The minimum requirements are as follows:

IRC Weld Mesh fencing in accordance to relevant IS Code

- Size of IRC mesh — 25X75mm
- Nominal wire size — 6 gauge/ 7.75 kg/m2
- Width of fencing panel — 2400mm
- Height of fencing — 2000mm
- Fabrication of panels — 40mm Nominal bore M.S. Pipe (medium duty). Providing elbow/bend at corners & 40 x 5 mm M.S. flats in beading
- Paint — Aluminum Paint

15.4.2. Posts

- Intermediate Straining Post : 65mm Nominal bore, M.S. Pipe (Medium duty)
- Base Plate : 12mm M.S. Plate with 4 nos of hole. Nuts & bolts of suitable diameter.
- Paint : shall be painted with a coat of approved steel primer and two coats of synthetic enamel paint

The IRC weld mesh Panels shall be fixed to the post at the top and bottom of the 65mm Nominal bore, M.S. Pipe by Nuts and bolts. The Intermediate straining Posts to be erected by using holding down bolts and nuts grouted in toe wall around the Yard (the height of Yard) Posts shall be set in 1:1.5:3 Reinforced cement concrete blocks of minimum dimension (340 mm x 340 mm x 750 mm deep) and Toe wall to be at least 450 mm below & 450 mm above the yard level and 340 mm wide matched with External facade of the building(Grit-wash).

15.5. Installation

15.5.1. Fence shall be installed along switchyard line.

15.5.2. Post holes shall be excavated by approved methods.

15.5.3. Intermediate posts shall be spaced 2.5 m apart measured parallel to ground surface.

15.5.4. Concrete work shall conform to relevant clause. Post shall be braced and held in plumb position and true alignment and elevation until concrete has set.

15.5.5. Fence fabric shall not be installed until concrete has cured a minimum of 7 days.

15.5.6. Bottom and top of the fence panels shall be fixed with post by MS flats of 50 mm x 6 mm (min).

15.6. Toe wall of Brick masonry, 345 mm thk, with notches over 100 mm thick PCC (1:4:8) shall be provided below all fencing and shall be minimum 450 mm above and 450 mm below finished ground level. All exposed surfaces of brick toe wall shall be finished with Grit plaster/Matched with Building façade.

15.7. M.S. Gate

15.7.1. M.S. Gate of 6.0 m wide x 2.3 m height (2 nos) and 1.55 m x 2.3 m height (1 no) shall be provided to provide access through the fencing to the yard. M.S. Gate of 6.0 m wide x 2.3 m height shall be made in two leaf and 1.55 m x 2.3 m height shall be made in one leaf with locking arrangements. The gate shall be made with outer frame of 40 NB (Medium) M. S. Pipe. Weld mesh of opening size 25 x 75 mm and nominal wire size of mesh is 6 gauge/ 7.75 kg/m2 (as per standard approved drawing of BSES).

15.7.2. Hinges, al-drops and other accessories shall be provided for effective working of the gate.

16.0 GATES

16.1. The gates shall be fabricated with welded joints to achieve rigid connections. The gate frames shall be painted with one or more coat of approved steel primmer and two coats of synthetic enamel paint.

16.2. Gates shall be fitted with approved quality iron hinges. Hinges shall permit gates to swing through 180 degree.

16.3. Gates shall be fitted with galvanized chain hook or gate hold back to hold gates open. Double gates shall be fitted with centre rest and drop bolt to secure gates in closed position.

16.4. Main Gate shall be at least 6m wide. Gates shall be installed in locations shown on drawings. Next to the main gate, a small gate (1.25 m wide, single leaf) within main gate shall also be provided as a wicket gate.

16.5. Bottom of main gates (both at entry and exit) shall be set approximately 40mm above ground surface with necessary guiding mechanism i.e., wheels at bottom along with a track allowing its smooth movement on floor shall be fitted as per site requirement.

16.6. The gates shall be provided with suitable locking arrangement.

17.0 MISCELLANEOUS GENERAL REQUIREMENTS

17.1. Dense concrete with controlled water cement ratio as per IS-code shall be used for all underground concrete structures such as pump-house, tanks, water retaining structures, cable and pipe trenches etc. for achieving water tightness.

17.2. All joints including construction and expansion joints for the water retaining structures shall be made water tight by using PVC ribbed water stops with central bulb. However, kicker type (externally placed) PVC water stops shall be used for the base slab and in other areas where it is required to facilitate concreting. The minimum thickness of PVC water stops shall be 5 mm and minimum width shall be 230 mm.

17.3. All mild steel parts used in the water retaining structures shall be hot-double dip galvanized. The minimum coating of the zinc shall be 610 gm/sqm. for galvanized structures and shall comply with IS:2629 and IS:2633. Galvanizing shall be checked and tested in accordance with IS:2633. The galvanizing shall be followed by the application of an etching primer and dipping in black bitumen in accordance with IS:3416.

17.4. A screed concrete layer not less than 100 mm thick and of grade not weaker than M10 conforming to IS: 456 shall be provided below all water retaining structures. A sliding layer of bitumen paper or craft paper shall be provided over the screed layer to destroy the bond between the screed and the base slab concrete of the water retaining structures.

17.5. Bricks having minimum 100 kg/cm2 compressive strength can only be used for masonry work. Contractor shall ascertain himself at site regarding the availability of bricks of minimum 100 kg/cm2 compressive strength before submitting his offer.

17.6. Doors and windows on external walls of the building (other than areas provided, with insulated metal claddings) shall be provided with RCC sunshade over the openings with 150 mm projection on either side of the openings. Projection of sunshade from the wall shall be minimum 600mm over window & door openings.

17.7. RCC staircase shall be provided for access to roof of the building. All stairs shall have maximum riser height of 150 mm and a minimum tread width of 300 mm Minimum width of stairs shall be 1500 mm. Steel doors shall be provided in the Mumty and height of Mumty should be at least 2.6m.

17.8. Angles 50x50x6 mm (minimum) with lugs shall be provided for edge protection all round cut outs/openings in floor slab, edges of drains supporting covers, edges of RCC cable/pipe trenches supporting covers, edges of manholes supporting covers, supporting edges of manhole precast cover and any other place where breakage of comers of concrete is expected.

17.9. Anti termite chemical treatment shall be given to column pits, wall trenches, foundations of buildings, filling below the floors etc. as per IS: 6313 and other relevant Indian Standards.

17.10. All reinforcement in RCC structures and structural steel members shall be of make TATA/ SAIL/ JSW.

17.11. The railing of staircase shall be 0.9 m average height comprising of stainless steel (Grade 304) Jindal Make member minimum 3 mm thick made of Hollow tubes, channels, plates etc., including welding, grinding, buffing, polishing and making curvature (wherever required) and fitting the same with necessary stainless steel nuts and bolts complete, i/c fixing the railing with necessary accessories & stainless steel dash fasteners , stainless steel bolts etc., of required size, on the top of the floor or the side of waist slab with suitable arrangement as per approval of Engineer-in-charge.

17.12. Loading/Unloading Platform stainless steel (Grade 304) Jindal make Balcony Railing hollow pipe 80x40x3 mm hand rail, horizontal pipes 40x20x3 mm .

17.13. All underground water retaining concrete structures shall have water proofing cement Plaster additive conforming to IS: 2645 water proofing for walls and base slab of all underground concrete structures like basements pump houses etc. shall be by "Injection Method".

17.14. All buildings shall have 750mm wide plinth protection all round.

17.15. Providing Fixing of Granite (Tan brown shade) to all Periphery of s/stn building 1000 mm above from Road level to give aesthetical look as per EIC shall be in scope of vendor.

17.16. Monorails, Monorail girders and fixtures shall be provided by the Bidder wherever required.

17.17. All foundations embedment, inserts, blockouts required for equipments shall be provided by bidder.

17.18. 50mm thick DPC shall be provided before laying of masonry (item no. 4.11 & 4.13-DSR 2012).

17.19. BSES Display board is to be provided of required size (3.0mx1.20m) and as per approved pattern /drawing of BRPL with name of the grid- ACP sheet signage with reverse 2D matter with LED Module Light having Automatic Timer on & off System.

17.20. Water and Sewer line connections to be done along with approval of CIVIC agency.

17.21. The details given in tender drawings shall be considered along with details available in this section of the specification while deciding various components of the building.

17.22. Balance Plot area should be covered with CC pavement/Pavers as per EIC

Items/components of buildings not explicitly covered in the specification but required for completion of the project shall be deemed to be included in the scope

18.0 INTERFACING

The proper coordination & execution of all interfacing civil works activities like fixing of conduits in roofs/walls/floors, fixing of lighting fixtures, fixing of supports/ embedments, provision of cutouts etc for indoor illumination, ventilation & Air conditioning shall be the sole responsibility of the Contractor. He shall plan all such activities in advance and execute in such a manner that interfacing activities do not become bottlenecks and dismantling, breakage etc. is reduced to minimum

19.0 FIELD QUALITY PLAN FOR CIVIL WORKS

The field quality plan for all civil works shall be in accordance with CPWD specification and other relevant Indian Standard Codes. All quality checks and procedures shall be followed as per relevant CPWD norms.

20.0 WATER SUPPLY

20.1. Water for construction work as well as drinking purpose shall be in the scope of Contractor.

20.2. The Contractor shall carry out all the plumbing/erection works required for supply of water in control room building.

20.3. A scheme shall be prepared by the Contractor indicating the layout and details of water supply which shall be got approved from the Owner before actual start of' work including all other incidental items not shown or specified but as may be required for complete performance of the works.

20.4. Either Bore-well or Connection from respective owners/DJB water source along with required pumps for water supply shall be in the scope of contractor. Although contractor shall provide an underground water reservoir, near the gate of minimum 20 M3 or sufficient capacity for refill of one fire Tanker. The water reservoir shall be provided with a high-pressure pump and single point fire hydrant outlet for refilling the fire tender in case of fire and emergency with proper waterproofing treatment & ceramic tiles finish on walls & Floor. Necessary valve shall be provided in the outlet.

20.5. The details of tanks, pipes, fittings, fixtures etc for water supply shall be approved by engineer in charge.

21.0 SEWERAGE SYSTEM

21.1. Sewerage system shall be provided for control room building.

21.2. The Contractor shall construct septic tank and soak pit suitable for 20 users or make connection with nearby existing sewerage system of Civic agencies/respective owners.

21.3. The system shall be designed as per relevant IS Codes.

21.4. External sewerage system including connection with internal services of building shall be within the scope of this contract. The connection and laying of sewer lines and manholes upto the point of connection with the sewer line of local civic agency if existing within 100m from any point of boundary of sub-station. If the sewer line of local civic agency does not exist in the area then septic tank with soak pit shall be constructed for control room building (suitable for 20 users). Vendor shall obtain necessary approval from civic agency for laying of sewer lines as aforesaid and connection thereof. Any municipal charges for approval and connection shall be paid by BRPL directly to the local authorities.

22.0 RAIN WATER HARVESTING

(a) Providing two recharge structures with bore wells at different locations as per approved drawing for rainwater harvesting system. The recharge structures shall be suitably located within the sub-station. Branch drains from the main drain carrying rainwater from entire switchyard, constructed in accordance with clause 9 & 10 shall be connected to the recharge structures.

(b) The internal dimensions of recharge shafts shall be 3.0 m X 2.5 m with 230mm thick lining of brick work upto a depth of 2.0 meter from Finished Ground level and 345mm thick brickwork below 2.0 meter depth. The brickwork shall be constructed with cement mortar 1:6 (1cement: 6 coarse sand). The overall depth of shaft shall be 3.0 meter below invert level of drain. The shaft shall be covered with RCC slab for a live load of 300 kg. per sqm. Two openings of size 0.7 x 0.7 meter shall be provided in the RCC cover slab. An iron cover made of 5mm thick chequered plate with hinges shall be provided on the openings. Galvanized M.S. rungs of 16mm diameter at spacing of 300 mm shall be provided in the wall of shaft below the opening in the RCC slab to facilitate cleaning of shaft.

(c) A 300 mm diameter bore well shall be drilled in the centre of the shaft. The depth of bore well shall be 5.0 meter more than the depth of sub soil water.

(d) A 100 mm diameter medium duty MS pipe conforming to IS: 1161 shall be lowered in the bore well keeping bail plug towards bottom of bore well. The pipe shall have 1.58mm holes for 4.0 meter length starting from 1.0 meter from bottom of bore well. Holes of 3.0mm diameter shall be provided for a length of 2.0 meter starting from the bottom level of coarse sand and down wards. The overall length of pipe shall be equal to total depth of bore well plus depth of shaft.

(e) Gravel of size 3mm to 6mm shall be filled around 100 diameter MS pipe in the bore well. The shaft shall be filled with 500 mm thick layers each from the bottom of shaft with boulders of size 50mm to 150mm, gravel of size 5mm to 10mm, coarse sand having particle size 1.5mm to 2.0mm

and boulders of size not less than 200mm respectively.

(f) Drawing based on above details of recharge structure for rainwater harvesting has to be prepared by contractor and to be approved from engineer in charge.

23.0 STATUTORY RULES

23.1. Contractor shall comply with all the applicable statutory rules pertaining to factories act (as applicable far the State), Fire Safety Rules of Tariff Advisory Committee. Water Act for pollution control, Energy Conservation Act, etc.

23.2. Provisions for fire proof doors, no. of staircases, fire separation wall, plastering on structural members (in fire prone areas) etc. shall be made according to the recommendations of Tariff Advisory Committee.

23.3. Statutory clearance and norms of State Pollution Control Board shall be followed as per Water Act for effluent quality from plant.

23.4. Foundation system adopted by Bidder shall ensure that relative settlement and other criteria shall be as per provision in IS: 1904 and other Indian Standards.

23.5. All water retaining structures designed as uncracked section shall also be tested for water tightness at full water level in accordance with clause no. 10 of IS :3370 (Part-I).

23.6. Construction joints shall be as per IS: 456.

23.7. All underground concrete structures like basements, pumps houses, water retaining structures etc. shall have plasticizer cum water proofing cement plaster additive conforming to 1S:9103. In addition, limit on permeability as given in 1S:2645 shall also be met with. The concrete surface of these structures in contact with earth shall also be provided with two coat of bituminous painting for water/damp proofing. In case of water leakage in the above structures, Injection Method shall be applied for repairing the leakage.

23.8. All building/construction materials shall conform to the best quality specified in CPWD specifications if not otherwise mentioned in this specification.

23.9. All tests as required in the standard field quality plans of CPWD or as per sound engineering practices have to be carried out.

23.10. The type and treatment of all foundation shall be as per recommendation of geo-technical investigation reports.

24.0 TESTS FOR MATERIAL / WORKMANSHIP

All tests required for various bought out items, materials, quality of workmanship or any other tests as desired by Project Manager and as specified in technical specification shall be carried out by the Bidder at his own cost in the presence of the authorized representative of the Engineer.

The quality assurance check lists are given at the end of respective chapters / sections of these specifications. The Bidder shall submit comprehensive Quality Assurance plan for all materials,

equipment, workmanship, services etc. and get it approved from the Engineer. This shall include setting up a test laboratory at site. However, such check list shall in no way limit the liability and responsibility of the Bidder in regard to quality of workmanship as detailed out in the specifications.

The sampling & testing of the construction materials shall be in accordance to latest CPWD Specifications related to all activities of the building and other civil construction works.

25.0 DRAWINGS

The successful Bidder shall first submit the structural design calculations along with general arrangement drawings for approval. After the approval of the design calculations by the owner detailed construction drawings shall be prepared and submitted for Employer's approval along with revised design calculations if required within 15 days. Required number of sets of design calculations, drawings and documents shall be submitted by the Bidder.

BOQ, Calculations and other documents etc. shall be on A4 size paper. All the drawings shall be drawn to the scale as far as possible on A1 size or larger size paper and should be legible. The submission shall be

- Three (03) Sets of approved and released for construction drawings/BOQ/Calculation for Owners reference.
- Six (06) Sets of final As Built drawings, design, BOQ, Calculation & O&M manual for all equipments supplied.
- Soft copies of all drawings/Documents/calculation in Auto CAD and Microsoft office file format as applicable.

Drawings shall be treated as submitted, only if provided with BOQ (If applicable). Transmittal sheet shall be mandatory to attach with all the drawing and documents. Format for transmittal shall be provided to successful bidder for drawing approvals etc.

26.0 ALTERATION IN SPECIFICATION AND DESIGN

The Project Manager shall have the power to make any alteration and omissions from, additions to or substitution for the original specifications, drawings, designs and instructions that may appear to him to be necessary during the progress of the work and the Bidder shall carry out the work in accordance with any instruction which may be given to him in writing signed by the Project Manager and such alterations, omissions, additions or substitutions shall not invalidate the contract and any altered, added or substituted work which the Bidder may be directed to do in the manner above specified as part of the work shall be carried out by the Bidder on the same conditions in all respects on which the Bidder agreed to do the original contract work. The time for completion of work shall be altered in the proportion that the altered, added or substituted work bears to the original contract work and the certificate of the Project Manager shall be conclusive as to such proportion.

The rates for the altered items of work shall be worked out on the following basis and necessary alternations in the total amount shall be made on that basis:

(a) The rates to be reimbursed or recovered shall be taken as same as those given in CPWD-DSR (2021) for those items for which the rates are available in CPWD - DSR (2021).

(b) Rates for the items not covered under CPWD - DSR (2021) shall be derived from the rates of

similar items of CPWD schedule of rates.

(c) In the event there is no similar class of work specified in the CPWD - DSR (2021), the Bidder shall work on a rate for such an item on the basis of the prevalent market rates for materials / men / machines and submit the same together with the detailed analysis to the Project Manager within 7 days. The Project Manager shall thereafter review the correctness and then conduct necessary negotiations with the Bidder to arrive at a mutually agreeable rate. Engineer's decision in regard to rates of such items shall be final and binding on the Bidder.

In case of conflict between this chapter and other Chapters of Technical Specifications, provisions given in this chapter shall govern.

\

Table 1- Finishing Schedule

No	Location	Flooring	Wall Internal	Ceiling	Doors, Windows, Ventilators
1	Control room	52 mm thick CC flooring with concrete hardener topping & Dust proof Epoxy Paint & False Flooring.as per specification clause No-6.5.2	Plastic emulsion Paint on smooth surface applied with putty	Oil bound washable distemper on smooth surface applied with putty to RCC Ceiling & P/F of False ceiling approved by EIC as per specification clause no. 6.9	Doors: 02 hours fire rated doors as per clause no. 6.10.b Windows & Ventilators: Aluminium Windows & Ventilators As per clause no. 6.10.c
2	Office rooms, maintenance room, Reception Lobby/ Passage, staircase area/ outdoor steps	Granite Flooring	Oil bound washable distemper on smooth surface applied with putty	Oil bound washable distemper on smooth surface applied with putty	Doors: Steel door as per clause no. 6.10.a Windows & Ventilators: Aluminium Windows & Ventilators As per clause no. 6.10.c
3	Toilet	Anti skid Ceramic tiles with white cement.	Ceramic glazed tile toilet, for pantry above working platform up to 750 mm.	Oil bound washable distemper on smooth surface applied with putty	Doors, Windows & Ventilators: Aluminium Doors, Windows & Ventilators As per clause no. 6.10.c
4	Cellar	52 mm thick CC flooring with concrete hardener topping	Oil bound washable distemper on smooth surface applied with putty	Oil bound washable distemper on smooth surface applied with putty	Doors: Steel door as per clause no. 6.10.a Windows & Ventilators: Aluminium Windows & Ventilators As per clause no. 6.10.c
5	Other areas not specified	Double charged Vitrified tile of size 600x600mm of make Kajaria or equivalent	Oil bound washable distemper on smooth surface applied with putty	Oil bound washable distemper on smooth surface applied with putty	Doors: Steel door as per clause no. 6.10.a Windows & Ventilators: Aluminium Windows & Ventilators As per clause no.

					6.10.c
6	Switchgear Room/GIS Room	Self leveling Epoxy flooring 2mm thick after application of 2mm thick screed over 52 mm thick CC flooring with concrete hardener topping	Oil bound washable distemper on smooth surface applied with putty	Oil bound washable distemper on smooth surface applied with putty	Doors: 02 hours fire rated doors as per clause no. 6.10.b Windows & Ventilators: Aluminium Windows & Ventilators As per clause no. 6.10.c
8	All external surfaces (S/stn building, boundary wall and other structures) shall have Texture finish of Make UTTPL (Ultratech Texture Paints Pvt. LTD) The texture finish and shade as approved by BRPL.				

Technical Specification

For

66 kV Gas Insulated Switchgear

Specification no – BSES-TS-84-66GIS-R0

Rev:		0
Page		1 of 39
Date:		11 May 2022
Prepared by	Abhishek Harsh	
	Javed Ahmed	
Reviewed by	Srinivas Gopu	
	Abhinav Srivastava	
Approved by	Gaurav Sharma	
	Gopal Nariya	

DocUUID : ef633536-12e1-468c-ba98-703264fe0eb1

INDEX

1.0 SCOPE 3
2.0 CODES & STANDARDS 3
3.0 SERVICE CONDITIONS 4
4.0 ELECTRICAL SYSTEM 4
5.0 SWITCHGEAR 5
6.0 LOCAL CONTROL CABINET 10
7.0 CIRCUIT BREAKER & THREE POSITION DISCONNECTOR 12
8.0 FUNCTIONAL REQUIREMENTS 13
9.0 BUSBARS 14
10.0 EARTHING 15
11.0 SURGE SUPPRESSOR 16
12.0 CURRENT TRANSFORMER 16
13.0 VOLTAGE TRANSFORMER 16
14.0 CABLE TERMINATION 17
15.0 METERS 17
16.0 MULTIFUNCTION METER 17
17.0 INDICATIONS & ALARMS 18
18.0 SELECTOR SWITCHES & PUSH BUTTONS 18
19.0 INTERNAL WIRING 19
20.0 TERMINAL BLOCKS 19
21.0 SPACE HEATERS, SOCKETS & ILLUMINATION LAMPS 20
22.0 NAMEPLATES AND MARKING 20
23.0 MIMIC, LABEL AND FINISH 21
24.0 APPROVED MAKES OF COMPONENTS 22
25.0 INSPECTION AND TESTING 23
26.0 DEVIATIONS 27
27.0 GTP 27
28.0 DRAWINGS & DATA SUBMISSION MATRIX 27
29.0 PACKING 28
30.0 SHIPPING 29
31.0 HANDLING AND STORAGE 29
32.0 ACCESSORIES 29
33.0 SPARES 30
34.0 ANNEXURE – A – TECHNICAL PARTICULARS 31
35.0 ANNEXURE-B- SLDS 36

DocUUID : ef633536-12e1-468c-ba98-703264fe0eb1

1.0 SCOPE

1.1 This specification covers the design, manufacture, testing, supply, erection & commissioning of 66kV, Gas Insulated (GIS), GIS bay module, connecting flanges, support structure, GIS ducts, SF6/Air Bushing, gas monitoring devices, barriers, pressure switches etc. Metal enclosed and factory assembled switchgear for BSES Rajdhani/Yamuna Power Ltd at Delhi.

1.2 This specification shall be used in conjunction with all specifications, switchgear data sheet, 66kV switchgear single line diagram and other drawing attached to the specification / Purchase requisition.

1.3 Special attention shall be given to an optimized GIS design with minimum space requirements. The contractor shall propose as part of this contract with the layout design of the GIS building to ensure that the most suitable arrangement is obtained for housing, supporting and fixing of the GIS. The bidder shall also provide a complete floor plan detailing the fixing points, size of foundation, required cable trenches, wall openings, doors, transport ways and lay down areas. All static and dynamic loads plus dimensional tolerances shall be given on these drawings to enable the civil works design to be optimized.

1.4 Supplier shall furnish all material, necessary hardware's, special tools for installation and maintenance, drawings and instructions for the constructions of the complete and ready to operate GIS.

2.0 CODES & STANDARDS

- Materials, equipment and methods used in the manufacture of switchboards shall conform to the latest edition of following –

2.1	Indian Electricity Rules 1956	
2.2	Switchgear and control gear	IEC : 60694, IEC: 60298, IEC : 62271, IEC : 60529, IS: 3427, IS: 12729, IS: 12063, IS: 13947, IS: 9046
2.3	Circuit breaker	IEC 62271 - 100, IS 13118, IS 2516
2.4	Alternating current disconnectors. Bus-transfer current switching by disconnectors.	IEC 61128
2.5	Alternating current earthing switches	IEC 61129
2.6	Isolators & earthing switches	IEC 62271 - 102
2.7	Current transformers	IS:2705, IEC 66044-1
2.8	Voltage transformer	IS:3156, IEC 66044-2
2.9	Cable connections for gas insulated switchgear	IEC 60859
2.10	New sulphur hexafluoride	IEC 60376
2.11	Non-linear resistor type arresters for AC systems	IEC 60099-1/4
2.12	Bushings for alternating voltages above 1000 V	IEC 60137
2.13	Factory-built assemblies of low-voltage switchgear and control gear.	IEC 60439
2.14	Indicating Instruments	IS:1248
2.15	Energy meters	IS 13010

DocUUID : ef633536-12e1-468c-ba98-703264fe0eb1

2.16	Relays	IS:8686, IS:3231, IS:3842
2.17	Control switches and push buttons	IS 6875
2.18	Arrangement of Switchgear bus bars, main connections and auxiliary wiring	IS:375
2.19	Code of practice for phosphating iron & steel	IS 6005
2.20	Colours for ready mixed paints	IS 5
2.21	Code of practice for installation and maintenance of switchgear	IS 3072

3.0 SERVICE CONDITIONS

3.1	Location	Indoor
3.2	Average grade atmosphere	Heavily polluted, Dry
3.3	Maximum altitude above sea level	1000M
3.4	Ambient air temperature	Highest 50^0C Average 40^0 C
3.5	Minimum ambient air temperature	0^0C
3.6	Relative Humidity	100%
3.7	Rainfall	750mm concentrated in four months
3.8	Seismic Zone	IV

4.0 ELECTRICAL SYSTEM

4.1	Type	Switchgear Shall be 66 kV, 3 Phase, 3 wire, 50 Hz
4.2	Earthing type	Solidly Earth
4.3	Fault Current	31.5 kA for 3 sec
4.4	Maximum Ambient Temperature	45^0 C
4.5	Minimum Ambient Temperature	0^0 C
4.6	Design Ambient Temperature	50^0 C
4.7	Relative Humidity	100%
4.8	Rating	As per Annexure –A / Tender SLD

DocUUID : ef633536-12e1-468c-ba98-703264fe0eb1

5.0 SWITCHGEAR

5.1	Structural Requirements	Switchgear shall be metal-clad cubicle design with double bus bar system having three phase common enclosure concept, in accordance with tender requirement. Refer Tender SLD/Annexure-A for details. Each bay shall be metal enclosed, free standing, floor mounting, flush fronted and arranged to form a single structure with a common bus bar assembly. Construction, including cable entry, shall be vermin proof.
5.2	Enclosure	The metal enclosures for the SF6 gas insulated equipment modules shall be made from Aluminum alloy. Suitable anti-corrosive paints must be applied on the exterior of the enclosures. The enclosure shall be suitable for three phases, i.e. Single Enclosure. The external fixtures should be made of corrosion resistant material and should be capped where required. Bellow compensators shall be made of Stainless steel to preserve the mechanical strength of the equipment at the connection portions to deal with the following problems: a. Expansion and Contraction of outer enclosure and conductor due to temperature variations. b. Mismatch in various components of GIS c. Vibration of the transformer and switching equipment d. Dimensional variations due to uneven settling of foundation e. Seismic forces as mentioned in climatic condition.
5.3	Compartments	f. Switchgear should be completely partitioned from bay to bay. Also, each bay should have separate compartments for the following- ➢ Busbars ➢ Circuit breakers ➢ Disconnectors ➢ Incoming/Outgoing power cables ➢ Local control cabinet g. The bus bars shall be further sub-divided into compartments including the associated bus bar disconnector. h. Sectionalisation shall ensure that circuit breaker enclosure will not include any other equipment in its gas compartment.
5.4	High Voltage Compartments	All high voltage parts shall be metal enclosed and filled with SF6 gas. Gas leakage rate for all gas filled compartments should be less than 0.5 % per annum. Bidder shall specify the type, quantity and operating pressure for all gas filled compartments or equipment. Degree of protection for HV compartment should be IP65.

DocUUID : ef633536-12e1-468c-ba98-703264fe0eb1

5.5	Gas sections	Each section shall be provided with necessary valves to allow evacuation and refill of gas without evacuation of any other section. Location of gas barrier insulators is to be clearly discriminated outside the enclosure by a band of distinct colour normally used for safety purposes. The gas system proposed shall be shown on a "gas single line diagram" and submitted with the technical bid and in the event of an order for approval. It should include the necessary valves, connections, density monitors, gas monitor system and controls, indication, orifices, and isolation to prevent current circulation. Means of calibrating density monitors without de-energizing the equipment should be specified by the supplier. For the purpose of gas monitoring and maintenance, the GIS shall be divided into various individual zones in each bay. The CB gas zone shall be independent from all other gas compartments and shall meet the requirement of relevant IEC.
5.5.1	Pressure Indicators	a. A pressure indicator shall be provided for each gas filled compartment with three stage alert i.e alarm, lockout and overpressure. b. Alarm stage shall be set appropriately to alert the operator of the reduction in gas pressure. c. Lockout stage shall be set to avoid any mal-operation in absence of gas pressure. d. Over pressure stage shall be provided to indicate abnormal pressure rise in the gas compartment. e. It shall be possible to test all gas monitoring relays without de-energizing the primary equipment and without reducing pressure in the main section. Disconnecting type plugs and sockets shall be used for test purposes. Pressure/density device shall be suitable for connecting to the male portion of the plug. f. Two potential free electrical changeover contacts shall be provided with each and every alarm condition.
5.6	HV Cable compartment	Each panel shall have an SF6 Gas-insulated cable connection compartment The connection between GIS and high voltage cable at GIS end shall be done through cable termination / cable sealing end. Plug in cable sealing ends for XLPE cables shall consist of gas tight plug in sockets, and prefabricated plugs with grading elements of silicone rubber. The design of the cable end box shall fully comply with the IEC standard. The type and size of cable is specified. All end cable modules shall be suitable for connecting single core, XLPE specified cable. Necessary provision for termination of specified nos. of such power cables shall be made in GIS.
5.7	Conductors	The conductors shall be made of aluminum alloy suitable for specified voltage and current ratings. The electrical connections between the various gas sections shall be made by means of multiple contact connectors (plug-in

DocUUID : ef633536-12e1-468c-ba98-703264fe0eb1

		type) so that electrical connection is automatically achieved when bolting one section to another. Field welding of conductor is not acceptable. The surface of the connector fingers and conductor on such connections shall be silver plated. Both, the conductors as well as the contacts for the conductor connections must be designed for the continuous rated current of the switch gear under the ambient conditions furnished, and shall not exceed the permissible temperature rise.
5.8	Safety from Internal faults	The structure, including doors and panels, shall be capable of withstanding the internal pressures created by faults within the structure (equal to the maximum fault-current rating) without danger to the operating personnel. Type test reports regarding internal arc withstand performance shall be available with bids.
5.8.1	Passive Protection from internal faults	A passive safety section shall ensure that hot gases shall be guided via pressure relief disks from each compartment. The pressure relief duct ends shall be guided to open air or fitted with absorbers to cool the hot gases. Relief into a cable basement or cavity below a false floor is not acceptable. Hazards to persons or risk of fire shall be reliably prevented. An arcing fault in one compartment should not cause damage to other compartments. Structure shall be provided with barriers to prevent the transfer of ionized gases between two adjacent compartments. Separate pressure relief vents shall be provided in bus bar, cable and circuit breaker compartments to release arc fault pressure quickly and safely. The orientation of pressure relief vents and gas exhaust ducts as necessary shall be coordinated during detailed engineering.
5.8.2	Internal arc classification	As per Annexure A
5.9	Tamper proof and Dust resistant	Required
5.10	Workability	Switchgear shall be designed and constructed to facilitate inspection, cleaning, repair and maintenance and to ensure absolute safety during such work. Interlocks, busbar shutters and covers shall be provided to prevent incorrect or unsafe operation and to prevent access to live parts. It shall be possible to work safely within individual panels, such as equipping and commissioning of spare panels as well as connecting main, control and auxiliary cabling, while the remainder of the switchgear is energized.

DocUUID : ef633536-12e1-468c-ba98-703264fe0eb1

5.11	Service continuity	a. Arc faults caused by external reasons shall be positively confined to the originating compartment and shall not spread to other parts of the switchgear. b. In case of any internal arc fault in a busbar, busbar disconnector or circuit breaker, of double bus system, repair works must be possible without shutting down complete substation and at least one busbar and the undisturbed bays must remain in operation. c. For Bus Coupler / sectionaliser - In case of any internal arc fault in a busbar, busbar disconnector or sectionaliser, repair work must be possible without shutting down the complete substation and at least one half of the substation must remain in operation. d. Documents indicating sequence of repair work steps and description of necessary restrictions during work shall be submitted with the technical bid. Each bay module should be equipped with suitable arrangement for easy dismantling and refitting during maintenance without disturbing other units.
5.12	Interchange-ability	Similar parts and components shall be interchangeable wherever practical. An interlock system shall be provided to prevent the interchange of modules with higher current rating with modules of lower current rating. Replacement of circuit breaker module shall be without interfering busbar operation and without gas work.
5.13	Doors and Covers	a. All doors, hinged covers, and hinged panels larger than 0.36 m^2 in area shall open at least 95 degrees and be equipped with doorstops to hold them in the open position. Door swing must allow withdrawable equipment to be withdrawn. All such doors and hinged covers shall be equipped with handles and secured by captive bolts, lockable with a key or pad-lockable. b. Breaker compartment door shall open and close without obstruction with and without rubber mats laid in front of the switchgear. Door of one panel should not cause hindrance for opening of adjacent panel.
5.14	Cover Plates	All cover plates that exceed 0.7 m^2 that require removal for installation or maintenance of the equipment shall be equipped with lifting handles and self-supporting lips. With the exception of the backs of panels cover plates shall not exceed 1.1 m^2 in area or 27 kg in weight, unless they are hinged and bolted or locked. Cover plates shall be secured using captive bolt fixings.

DocUUID : ef633536-12e1-468c-ba98-703264fe0eb1

5.15	Test Facilities	Each panel shall be provided with test facilities to allow for: a. Voltage testing of the primary circuit at rated voltage with all parts connected to the facility b. Current testing of primary circuit (primary injection test) c. Protection testing suitable for continuous operation at maximum current d. Access for test devices shall be clearly identified and covers shall be secured using captive fixings that require the use of a tool for access. Provision shall be included to secure the test devices in the test position.
5.16	Panel Dimension	Operating height maximum 1600mm
5.17	Extensibility	Switch gear shall be capable of extension in the future on either end by the addition of extra feeders, bus couplers, bus-bars, circuit breakers, Disconnectors, and other switch gear components without drilling cutting, welding or dismantling any major part of the equipment. The Vendor is required to demonstrate clearly in his submitted documents the suitability of the switchgear design in this respect. The arrangement shall be such that expansion of the original installation can be accomplished with minimum GIS down time. In case of extension, the interface shall incorporate facilities for installation and testing of extension to limit the part of the existing GIS to be re-tested and to allow for connection to the existing GIS without further dielectric testing.
5.18	Maintenance	a. The positioning of the circuit breaker in the GIS shall be such that it shall be possible to access the circuit breaker of any feeder from the front side for routine inspection, maintenance and repair without interfering with the operation of the adjacent feeders. b. The GIS shall be so designed that any component of the GIS can be removed easily. With minimum flexibility in the layout arrangement it shall be possible to remove the circuit breaker with both busbars remaining in service and it shall be possible to remove the disconnector of the busbars, with one bus bar remaining in service.
5.19	Safety	a. The switch-gear must provide a maximum degree of safety for the operators and others in the vicinity of the switch gear under all normal and fault conditions. The safety clearances of all live parts of the equipment shall be as per relevant standards. b. It must be made impossible to touch any live part of the switch-gear unwillingly i.e. without use of tools or brute force. c. An operator standing in the normal operating position should not be endangered by any moving external part of the switch-gear.

DocUUID : ef633536-12e1-468c-ba98-703264fe0eb1

5.20	Panel Base Frame	Steel Base frame as per manufacturer's standard. Bidder shall provide facilities for bolting the switchgear to its foundation. Such facilities shall be suitable for the specified seismic service.
5.21	Non- tiered construction	Incoming and bus-section units shall be located in non-tiered separate panels.

6.0 LOCAL CONTROL CABINET

6.1	Requirement	One local control cabinet (LCC) shall be supplied for the local control and operation of each bay. Each LCC shall contain the local control, interlocking, operation and indication devices for the associated GIS bay
6.2	Place	The LCC shall be free standing type and shall be mounted in front of each GIS bay. The LCC's shall be located with sufficient space for access and the possibility to work at the equipment even when the LCC doors are open, or directly at the switch-gear in front of the related circuit breaker
6.3	Dimension	Subject to buyer's approval
6.4	Enclosure type	The LCC's shall be designed to ensure that all LCC's are drip and splash proof. The LCC's shall also be dust and vermin proof. LCC shall comply degree of protection class IP-42 according to IEC60529
6.5	Enclosure material	Pre-galvanized, cold-rolled sheet steel of thickness not less than 2.0 mm. Stiffeners shall be provided wherever necessary.
6.6	Doors	Doors shall be provided for easy access of all equipment connections mounted in the LCC. Doors shall have handles with built-in locking facility.
6.7	Gland Plate	At least two separate gland plates of removable type with gasket shall be provided for each panel. They shall be of sheet steel of thickness not less than 3.0 mm.
6.8	Cable Entry	Shall be from the bottom
6.9	Control Circuit	The control and operation circuits shall be well shielded and with safety measures to protect operator from touching energized parts. Power frequency withstand of control circuits shall be 2 kV for 1 minute.
6.10	Gaskets	All doors, removable covers and panels shall be Gasketed all around with neoprene gaskets.
6.11	Ventilating louvers	Ventilating louvers, if required, shall have screens and filters. The screens shall be made of either brass or GI wires mesh.
6.12	Foundation	The panels shall be fixed on the embedded foundation channels with intervening layers anti vibration strips made of shock absorbing materials.

DocUUID : ef633536-12e1-468c-ba98-703264fe0eb1

6.13	Base Frame	Base frames shall be supplied along with panels. 100mm channel painted black.
6.14	Mounting	Equipment on front of panel shall be flush mounted. No equipment shall be mounted on the doors.
6.15	Working level	The centre lines of switches, push buttons and indicating lamps shall not be less than 750mm and higher than 1600mm from panel base. Height of relays, meters and recorders shall not be less than 450 mm from the bottom of the panel.
6.16	Appearance	The centre lines of switches, push buttons and indicating lamps shall be matched to give a neat and uniform appearance. Likewise the top lines of all meters, relays and recorders etc, shall be matched.
6.17	Control and Operation	The LCC should have required arrangement for control and operations of GIS from Remote i.e. from the control room through SCADA as well as SCADA compatible control and protection panel. The LCC shall include all required functions for control and supervision of a complete GIS as well as the marshalling of all connections to and from the GIS bays.
6.18	Switches & Lamps	a. Circuit breaker control switch with ON – OFF indicating lamps. – Circuit breaker “local-remote” selector switch. b. Disconnect switch, control switch with ON – OFF indicating lamps. c. Grounding switch, control switch with ON – OFF indicating lamps. d. Monitoring control of all high voltage switching devices in a bay. e. Any interposing relays and control switches associated with the circuit breakers disconnect switches, grounding switches etc.
6.19	Indication and Alarm	As specified in specification
6.20	Terminal Block	As specified in specification
6.21	Fuses, links and MCBs	These shall be installed in the interior of the LCC’s for protection of respective circuits based on scheme requirement.
6.22	Space heaters, Sockets & Illumination lamps	As specified in specification
6.23	Cable Connections	All cable connections between the various GIS modules and the LCC’s shall be made by prefabricated multi-core cables with multipoint plug in connections on both the ends. PTs & CTs circuit shall be wired with crimped type copper lugs. All cables shall be shielded and adequate for their application (indoor / outdoor). The cables shall be fire retardant low smoke. The length and the number of terminal points of control wiring & SF6 gas connections shall be minimized. The

DocUUID : ef633536-12e1-468c-ba98-703264fe0eb1

		electrical connections between the various gas sections shall preferably be made by means of multiple contact connectors so that electrical connection is automatically achieved when bolting on section to another. The surface of the connector fingers and conductor tubes on such connections shall be silver plated.

7.0 CIRCUIT BREAKER & THREE POSITION DISCONNECTOR

7.1	Circuit Breaker	
7.1.1	Interrupting medium	SF6
7.1.2	Type	Circuit – breakers shall be of single pressure, single break, self-compression self-blast / auto puffer type with SF6 as arc quenching & insulation medium and with a minimum- maintenance contact system
7.1.3	Breaker operation	Three separate identical single pole units operated through a common shaft
7.1.4	Operating Mechanism	Re-strike free, Trip free, with electrical anti-pumping feature
7.1.5	Type	Motor wound, spring charged, stored energy type with manual charging facility
7.1.6	Operation on supply failure	One O-C-O operation possible after failure of power supply to the spring charging motor
7.1.7	Shunt Release	For closing and tripping
7.1.8	Number of Trip coils	Two
7.1.9	Push buttons	a. Manual / mechanical ON/ OFF / Emergency trip push button b. Emergency Off push button should be provided with a protective flap. c. Mechanical ON shall have padlocking facility d. Labels giving clear instructions for manual operation should be provided wherever appropriate
7.1.10	Mechanical Indications	a. On-Off b. Operation counter c. Mechanism charge/discharge
7.1.11	Position detection	Through proximity sensors/Aux Switches
7.1.12	Breaker Control	On panel front only
7.1.13	Technical particulars	As per Annexure-A
7.1.14	Manufacturer/Model No	Vendor Specific
7.1.15	Short Circuit Current	31.5 kA for 3 Sec
7.1.16	Operations	10000 maintenance free operations at rated capacity
7.2	Three position Disconnector	
7.2.1	Functions	Three phase, three position suitable for- a. Connecting b. Disconnecting c. Earthing
7.2.2	Type	Motorized with provision for local and remote operation.

DocUUID : ef633536-12e1-468c-ba98-703264fe0eb1

		Operation of earth switch should be through local only. Provision for Manual operation shall also be there.
7.2.3	Place	For both line side and Bus Side
7.2.4	Position detection	Through proximity sensors/Aux Switches
7.2.5	Mechanical indications	Earthing switch close/open.
7.2.6	Padlocking facility	For locking the earthing device in the open and close position.
7.2.7	Rating	Continuous and Short circuit rating should be same as specified for switchgear.
7.2.8	High speed earthing switch	Required for all bays
7.2.9	On load bus transfer capability	Required for all bays
7.2.10	Maintenance Earthing Switches	Each maintenance-earthing switch shall be electrically interlocked with its associated disconnecting switch and circuit breaker such that it can only be closed if both the circuit breaker and disconnecting switch are open. Once closed it shall be secured against re-opening. Maintenance earthing switch shall be operable locally from the bay module control cabinet only; SCADA operation not required. Each earthing switches shall be provided with 4NO & 4NC auxiliary Switches. Provision shall be made for padlocking the earthing switches in either the open or closed positions.

8.0 FUNCTIONAL REQUIREMENTS

8.1	Interlocking requirements	Mechanical & electrical interlocks must be provided to ensure absolute and reliable protection against potentially harmful Mal-operation of the switchgear. All interlocks that prevent potentially dangerous mal-operations shall be so constructed such that they cannot be defeated easily, i.e. the operator must use tools and/or technique to over-ride them only in case of emergency.

DocUUID : ef633536-12e1-468c-ba98-703264fe0eb1

8.2	Interlock philosophy	a. The operator must be forced in to the only safe and logical sequence to actuate the circuit breakers, disconnectors & earthing switches. b. The actual, completely closed or completely opened position of all switching devices must be checked before and after each move. c. Implementation of logic checks and issuing the resultant signals Enabled or Blocked for the switching device.
8.3	Mechanical and electrical interlock conditions	a. To prevent earthing of an incoming supply which has not been isolated b. To prevent switching on an incoming supply which is earthed c. To prevent earthing of feeder circuit when the circuit breaker is in the closed position d. To prevent switching on a circuit breaker when the feeder is earthed
8.4	Breaker Operation	
8.4.1	Closing from local	Only when local/remote selector switch is in local position
8.4.2	Closing from remote	Only when local/remote selector switch is in remote position
8.4.3	Tripping from local	Only when local/remote selector switch is in local position
8.4.4	Tripping from remote	Only when local/remote selector switch is in remote position
8.4.5	Tripping from protective relays	Irrespective of position of local/remote switch
8.4.6	Trip circuit supervision	To be given for breaker close & open condition
8.4.7	Trip circuit supervision relay contact	For indication, alarm & to inhibit closing of breaker
8.4.8	Emergency trip push button contact	Wired directly to trip coil (wired to Master trip relay if second trip coil provided)
8.4.9	Emergency trip push button contact	Wired to inhibit closing of breaker
8.4.10	Master trip relay contact (if given)	Wired to inhibit closing of breaker
8.5	DC control supply bus in all panels	Fed by two DC incoming sources in Bus coupler panel with auto changeover facility
8.6	PT supply bus in all panels	Fed normally by bus PT with automatic changeover facility to incomer line PT

9.0 BUSBARS

9.1	Material	Aluminium alloy
9.2	Cross section	Uniform throughout length of switchgear

DocUUID : ef633536-12e1-468c-ba98-703264fe0eb1

9.3	Phase busbars	The phase busbars shall be enclosed in individual or a combined gas filled compartment. Busbars shall be silver or tin-plated at joints. Provision shall be made at the bolted connections to enable accessibility for maintenance and extension where appropriate.
9.4	Marking	All busbars and cable connections shall be marked to indicate the phase colouring, which shall be red, yellow and blue unless otherwise specified or explicitly precluded by relevant national standards.
9.5	Earth busbar	An earth busbar, sized for the earth fault rating of the electrical system and switchgear, shall be provided along the full length of the switchgear structure. The earth busbar shall have provision for earth cable connections at each end.
9.6	Supports	All phase and earth busbars and connections shall be sized, braced and supported to withstand the dynamic, dielectric stresses and thermal affects resulting from the switchgear rated short circuit current over the full length of the switchgear and carry certification from a recognized testing authority.
9.7	Rating	As per Annexure A / Tender SLD

10.0 EARTHING

10.1	Earthing of enclosure & non - current carrying parts	All metallic non-current carrying parts of the switchgear shall be bonded together and connected to the switchgear earth busbar. The frame of each functional unit and each device requiring earthing shall be connected directly to the earth busbar. For direct connection to the station earthing grid, earthing bolts of at least 10mm shall be provided at both ends of the main earth bar.
10.2	Busbar and Feeder Earthing	Through three position switch
10.3	Circuit breaker frame earthing	Integral earthing shall be provided on feeder/incoming circuit breakers for cable earthing, and on incoming or bus coupler circuit breakers for busbar earthing.
10.4	Earthing of withdrawable parts	Withdrawable parts shall be effectively earthed until they are completely withdrawn with all power and control connections disconnected.
10.5	Cable armour Earthing	Provision shall be made, adjacent to the cable termination, for connecting earthing cable armouring to the earth busbar.
10.6	Hinged doors	Earthed through flexible copper braid

DocUUID : ef633536-12e1-468c-ba98-703264fe0eb1

10.7	Metallic cases of relays, instruments and other LT panel mounted equipment	Connected to the earth bus by independent copper wires of size not less than 2.5 sq. mm with green colour insulation. For this purpose LT compartment should have a clear designated earth bus to which earth connections from all components are to be connected.
10.8	CT and PT neutral	Earthed at one place at the terminal blocks through links.
10.9	Instructions	Clear instructions, preferably pictorial, shall be provided showing methods of earthing wherever appropriate.

11.0 SURGE SUPPRESSOR

11.1	Provision	To be provided in all panels except bus coupler and BPT.
11.2	Type	Gapless, metal oxide type
11.3	Technical particulars	As per Annexure A / Tender SLD

12.0 CURRENT TRANSFORMER

12.1	Type	Window type with solid insulation of class of E or better.
12.2	Location	Shall be located outside the gas compartment.Each current transformer shall be provided such that the enclosure current does not affect the accuracy or the ratio of the device or the conductor current being measured. Provision shall be made to prevent arcing across the enclosure insulation.
12.3	Secondary terminals	The secondary terminals of current transformers shall be placed outside the high voltage enclosures, mounted in suitable, accessible terminal boxes and the secondary leads of all the current transformers shall be wired to shorting type terminals.
12.4	Rating plate	Should be located at position so that the details can be easily read.
12.5	No of cores and Rating	As per Tender SLD

13.0 VOLTAGE TRANSFORMER

13.1	Type	Each voltage transformer shall be metal enclosed, SF6 insulated in accordance with relevant IEC 60044. The location, polarity, ratios, and accuracy shall be as specified.
13.2	Location	VTs should be in segregated compartment and not forming a part of bus bar.
13.3	Disconnection provision	Motorised Disconnecting switch with provision for Manual operation.
13.4	No of cores and Rating	As per Tender SLD

DocUUID : ef633536-12e1-468c-ba98-703264fe0eb1

14.0 CABLE TERMINATION

14.1	Power Cable termination	
14.1.1	Cable entry	Socket and plug assembly shall be provided for the field power cables. Facilities shall be provided for cable testing including current and voltage injection of cables alongwith appropriate test plugs.
14.1.2	Dummy Plug	One dummy plug to be provided for each bay
14.1.3	Cable size and nos. of runs	As per Annexure B/ Tender SLD
14.1.4	Cable supports	Cable supports shall be provided to avoid undue strain on the cable termination assembly of GIS.
14.1.5	Gland plates	Termination of single core cables shall be through a non-magnetic metal panel or gland plate. Minimum air clearances shall be maintained over and above cable lugs and fixing bolts.
14.1.6	Armour Earthing	Provision should be made for bonding and earthing any armour and/or concentric earth conductors.
14.2	Control Cable termination	
14.2.1	Cable entry	Bottom and front entry
14.2.2	Gland plate	Undrilled 3mm CRCA

15.0 METERS

15.1	Mounting	Flush mounted
15.2	Voltmeter	Digital type with programmable ratio
15.3	Size	96x96 mm
15.4	Panels where to be provided	Incomer and bus PT panel
15.5	Voltmeter switch	Inbuilt in meter
15.6	Accuracy Class	1.0
15.7	Auxiliary supply	Universal type suitable for 230VAC and 220VDC
15.8	Energy meter provision	Energy meter is not in supplier's scope. Only space and CT/PT wiring is to be provided in all panels except bus coupler and bus PT. Dimension shall be 350(H)x200(W) mm^2.

16.0 MULTIFUNCTION METER

16.1	Model	**RISH 3440 and Conzerv EM 6400NG**
16.2	Make	Rishabh/Schneider
16.3	SCADA Interfacing	RS485 rear port suitable for integration on Modbus Protocol
16.4	Size	96x96 mm^2
16.5	Panels where to be provided	All panels

DocUUID : ef633536-12e1-468c-ba98-703264fe0eb1

16.6	Accuracy Class	1
16.7	Auxiliary Supply	48 – 240VDC and AC i.e universal type.

17.0 INDICATIONS & ALARMS

17.1	Indications	Flush mounted, High intensity, clustered LED type
17.1.1	Breaker ON	Red
17.1.2	Breaker Off	Green
17.1.3	Isolator On	Red
17.1.4	Isolator Off	Green
17.1.5	Earth switch On	Red
17.1.6	Earth switch Off	Green
17.1.7	Spring Charged	Blue
17.1.8	DC control supply fail	Amber
17.1.9	AC control supply fail	Amber
17.1.10	Auto trip	Amber
17.1.11	Heater circuit healthy	Yellow (Indication with integrated push button for checking)
17.1.12	Trip circuit healthy	White
17.1.13	PT supply as applicable	R,Y B
17.2	Alarm scheme with isolation switch	a. For DC fail, TC fail and CB auto trip in 11kV panels b. For all signals wired to annunciator in 66kV panels

18.0 SELECTOR SWITCHES & PUSH BUTTONS

18.1	Selector switches	Flush mounted on LV compartment door, with shrouded terminals
18.1.1	TNC switch with pistol grip	Lockable, spring return to normal position for CB, Isolator and earth switch control
18.1.2	Local / SCADA selector switch	2 pole
18.1.3	Rotary ON/OFF switches	For heater / illumination circuit
18.1.4	Rating	16 A
18.2	Push Button	Flush mounted on LV compartment door, with shrouded terminals
18.2.1	Emergency trip push button	Red color with stay put
18.2.2	Accept push buttons	Black color – Trip alarm / DC fail alarm
18.2.3	Reset push buttons	Yellow color – Trip alarm / DC fail alarm
18.2.4	Rating	10 A

DocUUID : ef633536-12e1-468c-ba98-703264fe0eb1

19.0 INTERNAL WIRING

19.1	Grade and type	1100 V, PVC insulated, FRLS type stranded flexible copper wire.
19.2	Voltage Rating	600 / 1000 Vac
19.3	Size	2.5 sq mm for CT circuit, 1.5 sq mm for PT & control circuits
19.4	Colour code	
19.4.1	CT & PT	R Ph – Red Y Ph – Yellow B Ph – Blue Neutral – Black
19.4.2	Others	DC– grey, AC-black, Earth – green
19.5	Ferrules	At both ends of wire
19.6	Ferrule type	Interlocked type (one additional red colour ferrule for all wires in trip circuit)
19.7	Lugs	Tinned copper, pre-insulated, ring type, fork type and pin type as applicable. CT circuits should use ring type lugs only.
19.8	Spare contacts	Spare contacts of relays and contactors etc. should be wired upto the terminal block.
19.9	Panel wiring	Panel wiring shall be on one side of the terminal block only. No more than two wires shall be connected to a terminal.
19.10	Interpanel wiring	Interpanel wiring for AC and DC supplies, voltage transformer circuits, annunciation circuits and other common services shall be provided on the same set of terminals in all the panels with proper segregation. Wires with ferrule to be terminated in the adjacent shipping section should be supplied with one end terminated and the other end bunched and coiled.
19.11	Wiring enclosure	Plastic channels for panel wiring, PVC sleeves for Inter panel wiring. Where wiring enters or passes through compartments containing high voltage apparatus, it shall be run in earthed continuous metallic conduit/trunking without gaps, holes or joints.

20.0 TERMINAL BLOCKS

20.1	Rating and Type	1100 V grade, moulded piece, stud type screw driver operated terminals complete with insulated barriers, washers, nuts and lock nuts.
20.2	Suitability	For termination of minimum 6sqmm flexible copper conductor.
20.3	Marking and covers	White fibre markings strip with clear plastic, slip-on / clip-on terminal covers to be provided.
20.4	Disconnecting Facility	To be provided in CT and PT terminals
20.5	Shorting & Earthing Facility	To be provided in CT Terminals

DocUUID : ef633536-12e1-468c-ba98-703264fe0eb1

20.6	Spare Terminals	20% in each TB row
20.7	TB shrouds & separators	Moulded non- inflammable plastic material
20.8	Clearance between 2 sets of TB	100 mm min
20.9	Clearance with cable gland plate	250 mm min
20.10	Clearance between AC / DC set of TB	100 mm min
20.11	Test terminal blocks	Screw driver operated stud type for metering circuit

21.0 SPACE HEATERS, SOCKETS & ILLUMINATION LAMPS

21.1	Space Heaters	
21.1.1	Type	Thermostat controlled with switch for isolation
21.1.2	Location	In Breaker & HV cable compartment, mounted on an insulator. Heater position in cable compartment should be easily accessible after cable termination.
21.2	Illumination lamp with switch	For LV & cable chamber
21.3	Universal type (5/15 A) Socket with Switch	In LV chamber

22.0 NAMEPLATES AND MARKING

22.1	Nameplates	To be provided as per the following description
22.1.1	Equipment Nameplates	a. All equipment mounted on front as well as inside the panels shall be provided with individual name plates with equipment designation/description engraved. b. All front mounted equipment shall be also provided at the rear with individual name plates engraved with tag numbers corresponding to the one shown in the panel internal wiring to facilitate easy tracing of the wiring.
22.1.2	Gas Single Line diagram	Single Line Diagram showing all HV devices in a single line diagram with the gas sectionalizing of the GIS indicated. Also shown shall be the GIS nomenclature, a legend, Manufacturer's type and serial number and year of manufacture.
22.1.3	Feeder Nameplates	Large and bold name plate carrying feeder identification/ feeder number shall be provided on the top of each panel on front as well as rear side. On rear side, nameplate should be provided on frame.
22.1.4	Panel Rating Plate	Following details are to be provided on Panel rating plate: a. Manufacturers name or trade mark

DocUUID : ef633536-12e1-468c-ba98-703264fe0eb1

		b. Switchgear designation c. Rated system voltage, phases, wires and frequency d. Rated fault current e. Busbar rating f. Insulation Gas Type and rated filling pressure for insulation g. Alarm pressure for insulation h. Minimum functional pressure for insulation i. Minimum functional pressure for operation j. Design pressure of gas filled compartment k. Year of manufacture l. Warranty Period m. Purchasers name n. Serial no o. Customer – BSES p. PO No. & Date – As per respective PO. q. CT rating details r. PT rating details
22.1.5	CB Rating Plate	a. Type / Model No. b. Month /Year of Manufacturing c. Current and voltage rating. d. Rated fault making and breaking current.
22.1.6	Material	Non-rusting metal or 3 ply lamicoid. Nameplates shall be black with white engraved lettering. Stickers are not allowed.
22.1.7	Fixing of rating plates and external nameplates	Shall be riveted to the panels at all four corners. Bolting/screwing is not acceptable.
22.1.8	Fixing of internal nameplates	Internal labels may make use of a durable proprietary labeling system unless specifically indicated otherwise.
22.2	Markings	Each switch shall bear clear inscription identifying its function. Similar inscription shall also be provided on each device whose function is not otherwise identified. If any switch or device does not bear this inscription separate nameplate giving its function shall be provided for it. Switch shall also have clear inscription for each position indicating e.g. Trip-Neutral close, ON-OFF etc.

23.0 MIMIC, LABEL AND FINISH

23.1	Mimic	
23.1.1	System Representation	Colored mimic diagram and symbols showing the exact representation of the system shall be provided in the front of Control & Relay Panel panel & LCC Panel

DocUUID : ef633536-12e1-468c-ba98-703264fe0eb1

23.1.2	Material	Mimic diagram shall be made preferably of painted aluminum or plastic (approved material), which shall be screwed on to the panel and can be easily cleaned. Painted overlaid mimic is also acceptable. The mimic bus shall be 2-3 mm thick. The width of the mimic bus shall be 12mm for bus bars and 10 mm for other connections
23.1.3	Mimic Indications	LED indications are to be used for breaker and isolator position and semaphore indicators shall be used for earth switch position.
23.2	Label	
23.2.1	Labels for meters, indication & all cards / sub assemblies in panel	Anodized aluminum with white character on black background
23.2.2	Danger plate on front & rear side	Anodized aluminum with white letters on red background
23.3	Finish	
23.3.1	Painting surface preparation	Shot blasting or chemical 7 tank process
23.3.2	Painting external finish	Powder coated polyester base grade A, shade –RAL 7032, uniform
23.3.3	Painting internal finish	Powder coated polyester base grade A, shade – white, uniform thickness 50 micron minimum
23.3.4	Labels for all components in panel	Anodized aluminum with white character on black background, fixed by rivets only
23.3.5	SLD	SLD of charges shall be provided at backside of the main door of Charger on Aluminium plate

24.0 APPROVED MAKES OF COMPONENTS

24.1	Contact Multiplication Relays	Alstom/Schneider/Siemens/ABB
24.2	Contactors	ABB/Siemens/Schneider/ Telemechanique
24.3	MCBs	Siemens/Schneider/Legrand/ABB
24.4	Control switches	Switron/Kaycee
24.5	Test terminal blocks	IMP/Schneider/Alstom
24.6	Terminal blocks	Elmex/Connectwell
24.7	Indicating lamps	Siemens/Teknic/ Binay
24.8	Surge Suppressors	Oblum/Tyco
24.9	Cable termination	Pfisterer/Sudkabel/ NKT/ Euromold
24.10	Multifunction Meter	Rishabh/Schneider

DocUUID : ef633536-12e1-468c-ba98-703264fe0eb1

25.0 INSPECTION AND TESTING

25.1	Type Tests	The product must be of type tested quality as per applicable Indian standards / IEC
25.2	Type test report validity period	Last five years from date of bid submission. Bidder with type test report more than 5 years old needs to re-conduct the tests without any commercial implication to BSES
25.3	Pressure relief device operation	Test certificate for panel to be submitted
25.4	Acceptance & Routine tests	To be done as per this specification and relevant standards. Charges for all these tests shall be deemed to be included in the equipment price. In addition to these tests, following tests have to be carried out as acceptance tests -
25.5	Primary injection test	To be carried out on panels selected for testing
25.6	Temperature rise test	One panel per Purchase order (PO with minimum 10 panels) without any commercial implication to BSES. In-house testing is acceptable.
25.7	Paint Thickness/ Peel off	To be carried out on panels selected for testing
25.8	Inspection	The purchaser/owner reserves the right to witness all the acceptance/routine tests during inspection.
25.9	Notice to purchaser for conducting type tests	At least three weeks in advance
25.10	Test reports before dispatch for approval	Six (6) copies of acceptance and routine test reports
25.11	Factory Acceptance Tests	The following type tests should be submitted for the GIS / CB / other equipments as applicable. Tests shall be conducted on one GIS bay of Each type. 1. Dielectric voltage withstand tests • Power frequency withstand voltage • Impulse withstand voltage 2. Making and breaking capability test 3. Short time current test and peak current test 4. Electrical / Mechanical endurance test 5. Continuous current carrying and temperature rise test 6. Current path resistance measurement 7. Pressure Tests 8. Partial discharge test 9. Internal arc tests 10. Proof tests for enclosures

DocUUID : ef633536-12e1-468c-ba98-703264fe0eb1

		a) Circuit breakers (in accordance with IEC 56) - Tests to prove performance when breaking line charging currents. - Tests to prove performance when breaking small inductive currents. - Mechanical and environmental test b) Gapless Surge Arresters (in accordance with IEC 99 - 4) - Insulation withstand test - Residual voltage test c) Steep current test d) Lightning current test e) Switching current test - Long duration current impulse withstands test - Operating duty test f) Disconnectors and Earthing Switches (in accordance with IEC 1259) - bus charging current switching test g) Current Transformers (in accordance with IEC 185) h) Potential Transformer (in accordance with IEC 186) i) Pressure Vessel Test - Test according to Pressure Vessel Code of the country of origin or CENELEC standards shall be performed on the enclosures.
25.12	Site Tests	The following tests shall be performed on the completely assembled switchgear at site after installation. Test results as well as test conditions like ambient temperature, gas pressure, dew point etc. shall be documented and the results compared with the relevant instructions and factory test reports. A final site test

DocUUID : ef633536-12e1-468c-ba98-703264fe0eb1

		report shall be supplied to the owner within 3 weeks after the tests have been finished. The vendor shall arrange all the required test equipments. 1. Visual inspection, checks and verifications. The following shall be inspected and verified: - Conformity of the assembly with the manufacturer's drawings and instructions. - Tightening of all pipe junctions, bolts and terminal connections. - Visual check of all control circuits, PT circuits, and CT circuits. - Proper function of the control, measuring, protective and regulating equipment including heating and lighting by means of the relevant commissioning reports. - Mechanical operation tests of Circuit Breaker, Disconnecting switch, earthing switch and fast acting earthing switch. - Rated SF6 gas pressure and control voltage: - O-C-O operation. - Maximum control voltage: O-C-O operation. - Minimum control voltage: O-C-O operation. 2. SF6 gas leakage test. The following parts shall be checked, using a leakage detector for SF6 gas indication: - each flange connection installed on site - each gas coupling - each bursting disc 2a. Internal fault location after arching

DocUUID : ef633536-12e1-468c-ba98-703264fe0eb1

		3. DC resistance measurement of the main circuits: 4. Gas density monitor check 5. Interlock test 6. Measurement of moisture content: The moisture test (dew point measuring) shall be made on > 10% of the SF6 gas compartments 3-4 weeks after gas filling. The moisture level shall then be within the specified level. 7. Manual operating check of circuit breaker, disconnect switch, earthing switch and fault making earthing switch . 8. Power frequency withstand of main circuit: After the completion of installation the GIS shall be tested with 80% of the AC voltage applied for the factory routine tests. Test duration shall be 1 minute. These tests shall be performed by means of special HV testing equipment connected to the GIS. The special testing equipment and special test adapters for flange connection (if required) shall be supplied by the manufacturer for temporary use during the tests. 9. Power frequency test of control circuit at 2 kV r.m.s. (1 min) 10. Any other tests to be recommended by the manufacturer.

DocUUID : ef633536-12e1-468c-ba98-703264fe0eb1

26.0 DEVIATIONS

- Deviation from this specification shall be stated in writing with the tender by reference to the specification clause/ GTP/ Drawing and description of alternative offer. In absence of such a statement, it shall be assumed by the buyer that the seller complies fully with this specification.

27.0 GTP

- Vendor must submit clause wise compliance against specification at the time of drawing approval clearly highlighting the deviations from specification against each clause.

28.0 DRAWINGS & DATA SUBMISSION MATRIX

- Drawing submission shall be as per the matrix given below. All documents/ drawing shall be provided on A3/A4 sheet in box file with separators for each section. PDF shall also be provided of all documents via USB.
- Language of the documents shall be English only. Deficient/ improper document/ drawing submission shall be liable for rejection.

S. No	Head	Bid	Drawing Approval	Pre Dispatch	Pre Closure
28.1	Contact Person Name, Email ID and Mobile Number	Required	Required		
28.2	Deviation Sheet (as per “Deviations” Clause)	Required			
28.3	GTP	Required	Required		
28.4	Relevant Type Test as per IS/IEC/UL	Required	Required		
28.5	Manufacturer's quality assurance plan and certification for quality standards		Required		
28.6	Sizing Calculation of Associated Equipment		Required		
28.7	Recommended Spares for five years of operation)		Required		
28.8	66 kV Switchgear , CRP and LCC				
28.8.1	General Arrangement	Required	Required		
28.8.2	Sectional Layout		Required		
28.8.3	Cabinet Layout		Required		

DocUUID : ef633536-12e1-468c-ba98-703264fe0eb1

S. No	Head	Bid	Drawing Approval	Pre Dispatch	Pre Closure
28.8.4	SLD	Required	Required		
28.8.5	Schematic Circuit diagram and Scheme of Each type of Panel		Required		
28.8.6	Communication Architecture		Required		
28.8.7	QAP		Required		
28.8.8	BOQ		Required		
28.8.9	Plan		Required		
28.8.10	Foundation Diagram		Required		
28.8.11	Make of all Component as per specification		Required		
28.8.12	Drawing of Substation Room		Required		
28.9	Installation, erection and commissioning manual		Required		
28.10	Inspection Reports			Required	
28.11	As manufacturing Drawings			Required	
28.12	Operation and Maintenance Manual			Required	
28.13	Trouble shooting manual			Required	
28.14	As built Drawings				Required

29.0 PACKING

29.1	Packing Protection	Against corrosion, dampness, heavy rains, breakage and vibration. During transportation/ transit and storage, panels may be subjected to outdoor conditions. Hence, packing of each panel shall be weatherproof.
29.2	Packing for accessories and spares	Robust wooden non returnable packing case with all the above protection & identification Label
29.3	Packing Identification Label to be provided on each packing case with the following details	
29.3.1	Individual serial number	
29.3.2	Purchaser's name	
29.3.3	PO number (along with SAP item code, if any) & date	
29.3.4	Equipment Tag no. (if any)	

DocUUID : ef633536-12e1-468c-ba98-703264fe0eb1

29.3.5	Destination
29.3.6	Project Details
29.3.7	Manufacturer / Supplier's name
29.3.8	Address of Manufacturer / Supplier / it's agent
29.3.9	Description and Quantity
29.3.10	Country of origin
29.3.11	Month & year of Manufacturing
29.3.12	Case measurements
29.3.13	Gross and net weights in kilograms
29.3.14	All necessary slinging and stacking instructions

30.0 SHIPPING

30.1	Shipping	The bidder shall ascertain at an early date and definitely before the commencement of manufacture, any transport limitations such as weights, dimensions, road culverts, Overhead lines, free access etc. from the Manufacturing plant to the project site. Bidder shall furnish the confirmation that the proposed Packages can be safely transported, as normal or oversize packages, up to the site. Any modifications required in the infrastructure and cost thereof in this connection shall be brought to the notice of the Purchaser.
		The Bidder shall be responsible for all transit damage due to improper packing.

31.0 HANDLING AND STORAGE

31.1	Handling and Storage	Manufacturer instruction shall be followed. Detail handling & storage instruction sheet / manual needs to be furnished before commencement of supply.

32.0 ACCESSORIES

- Should be supplied along with the each switchgear as per table below

S No.	Description	Qty
32.1	Current test plug/ adapter	2
32.2	Voltage test plug/ adapter	2
32.3	Operating Handles	2 sets
32.4	Adaptor Plug	2 sets
32.5	Gas leak detector – DILO make	1
32.6	Cable dummy plugs	1 set per Incomer/Trafo panel

DocUUID : ef633536-12e1-468c-ba98-703264fe0eb1

32.7	Special tools and tackles required for erection, testing, commissioning and maintenance of the switchboard should be supplied with the switchboard.	1 set
32.8	Other accessories required for trouble free operation of switchgear as per manufacturer recommendation.	1 set
32.9	Support Structure for GIS	1 Lot (As per requirement)

33.0 SPARES

- Spares requirement are tabulated below.
- Unit price for all the spares should be indicated in price bid.

S No.	Description	Qty
33.1	Contactors of each type	5
33.2	Contact Multiplication Relay of each type	5
33.3	Line voltage transformer	3 (1 set)
33.4	Bus voltage transformer	3 (1 set)
33.5	GIS End Termination Kit for 3 Phase cable	2 sets (Cable as mentioned in Tender SLD/ Annexure- B)
33.6	Current transformers suitable for incomer panel	3 (1 set)
33.7	Current transformers suitable for transformer panel	3 (1 set)
33.8	Current transformers suitable for bus coupler panel	3 (1 set)
33.9	Trip Coil	4
33.10	Closing Coil	4
33.11	CB Spring charging motor	2
33.12	Auxiliary switch	2 sets (2 Nos. each type)
33.13	Disconnector motor for isolator	1
33.14	Disconnector motor for earthswitch	1
33.15	Gas density switch	2
33.16	Bursting disc / pressure relief plate complete	2
33.17	Capacitive voltage indicator	6 (2 sets)
33.18	Mobile gas filling and evacuation along with Gas Filter device along with Gas Filter -DILO make	1 Set
33.19	SF6 Gas cylinders	4
33.20	Precision pressure gauge	1 No
33.21	Electronic moisture/SF6 gas humidity tester with dew point	1 No
33.22	Spare Terminals	20% of Supplied Items (Minimum)
33.23	Gas Leakage Detectors-Dilo Make	1 No
33.24	Other spares recommended by manufacturer may be added to this list	

DocUUID : ef633536-12e1-468c-ba98-703264fe0eb1

34.0 ANNEXURE – A – TECHNICAL PARTICULARS

34.1	SWITCHGEAR		
34.1.1	Type	Metal clad, SF6 gas insulated with SF6 type circuit breaker	
34.1.2	Service	Indoor	
34.1.3	Mounting	Free standing, floor mounted	
34.1.4	System Voltage	66kV	
34.1.5	Voltage variation	+/- 10%	
34.1.6	Frequency	50 Hz +/- 5%	
34.1.7	Phase	3	
34.1.8	Rated voltage	72.5 kV	
34.1.9	Rated current	As per Single line diagram	
34.1.10	Short time rating for 3 sec.	31.5 kA	
34.1.11	Internal arc classification and rating		
34.1.11.1	Classification	IAC – A – FLR	
34.1.11.2	Rating	31.5 kA for 3 second.	
34.1.12	Insulation level (PF rms / Impulse peak)	140 kV/ 325 kV	
34.1.13	System ground	Solidly earthed	Solidly earthed
34.1.14	Enclosure degree of protection	IP – 65 for gas filled compartments IP – 4X for Cable and LV compartment	
34.1.15	Bus bar – Main	Rating as per SLD, Short time rating as per clause 1.10.	
34.1.15.1	Material	Copper	
34.1.15.2	Bus bar joint plating	As per manufacturer's standard. Tape on joints is not acceptable.	
34.1.15.3	Bus identification	Colour coded	
34.1.15.4	Temperature rise	40 deg. C for conventional joints. 55 deg. C for silver plated joints	
34.1.16	Auxiliary bus bar	Electrolytic grade tinned copper	
34.1.17	Auxiliary DC Supply	220 V DC / 50 V DC	
34.1.18	Auxiliary AC supply	240 V AC 50 Hz	
34.1.19	Hardware	Stainless steel.	
34.1.20	Earth bus	Aluminium	
34.1.21	Power cable entry	From bottom and rear	
34.1.22	Control cable entry	From bottom and front (i.e breaker compartment)	
34.1.23	Gas pressure – busbar compartment		
34.1.23.1	Normal gas pressure		
34.1.23.2	Permitted range of Gas pressure for safe operation		

DocUUID : ef633536-12e1-468c-ba98-703264fe0eb1

34.1.23.3	Alarm level	
34.1.23.4	Gas pressure for operation of PRD	
34.1.23.5	Withstand gas pressure of enclosure	
34.1.23.6	Number of aux.contacts /stages provided for the gas density meter	
34.1.24	Gas pressure – breaker compartment	
34.1.24.1	Normal gas pressure	
34.1.24.2	Permitted range of Gas pressure for safe operation	
34.1.24.3	Alarm level	
34.1.24.4	Gas pressure for operation of PRD	
34.1.24.5	Withstand gas pressure of enclosure	
34.1.24.6	Number of aux. contacts /stages provided for the gas density meter	
34.1.25	Material and thickness of gas enclosure	
34.1.26	Total no. of Gas compartments per panel	
34.1.27	Number of Gas Density meters provided per panel	
34.1.28	Rating of Isolator (A)	Same as CB Rating
34.1.29	Rating of earthing switch (A)	Same as CB Rating
34.1.30	Guaranteed Gas leakage Rate	<0.5%
34.1.31	Rodent damage protection	Required
34.1.32	Ground and test device	Required
34.1.33	Equipment Labeling	Anodized Aluminium
34.1.34	Lift truck	If Required
34.1.35	Testing facility	
34.1.35.1	For Cable	Required
34.1.35.2	For CT	Required
34.1.35.3	For PT	Required
34.2	CIRCUIT BREAKER	
34.2.1	Voltage class, insulation level, short time rating	As specified for switchgear
34.2.2	Rated current	As per SLD.

DocUUID : ef633536-12e1-468c-ba98-703264fe0eb1

34.2.3	Duty cycle	O – 0.3 sec – CO – 3min – CO
34.2.4	Short circuit rating	
34.2.4.1	A.C sym. Breaking current	31.5 kA
34.2.4.2	Short circuit making current	78.75 kA
34.2.5	Operation time	
34.2.5.1	Break time	Not more than 4 cycles
34.2.5.2	Make time	Not more than 5 cycles
34.2.6	Range of Auxiliary Voltage	
34.2.6.1	Closing	85% - 110%
34.2.6.2	Tripping	70% - 110%
34.2.6.3	Spring Charging	85% - 110%
34.2.7	No. of spare aux. Contacts of Breaker, for Owner's use.	Minimum 4 NO + 4 NC
34.2.8	Nos. of spare auxiliary contacts of disconnector	Minimum 2 NO + 2 NC
34.2.9	Nos. of spare auxiliary contacts of earth switch	Minimum 2 NO + 2 NC
34.2.10	Manufacturer / Model No.	
34.2.11	Rated Voltage Range Factor, K	1.1
34.2.12	Power Frequency Withstand Voltage	140 kV
34.2.13	Lightning Impulse Withstand Voltage	325 kV
34.2.14	Rated Continuous Current	As per single line drawing.
34.2.15	Rated Transient Recovery Voltage Time to Peak (T2)	Manufacturers Standard
34.2.16	Rated Interrupting Time	60 ms
34.2.17	Time for Opening Operation	3 cycles
34.2.18	Time for Closing Operation	4 cycles
34.2.19	Closing and latching capability (peak)	Manufacturers Standard
34.2.20	Control Power Voltage Range, Trip Coil	220VDC
34.2.21	Control Power Voltage Range, Closing Coil	220VDC
34.2.22	Auxiliary Contacts Total	12

DocUUID : ef633536-12e1-468c-ba98-703264fe0eb1

34.2.23	Min. Auxiliary Contacts for Customer use	6
34.2.24	Auxiliary Contact voltage rating	220VDC
34.2.25	Auxiliary Contact current rating	10 A
34.2.26	Stored Energy System Minimum Voltage	187 VDC
34.2.27	Stored Energy Spring Charging Motor Current	MS
34.2.28	Stored Energy Spring Charging Motor Inrush	MS
34.2.29	Stored Energy Time to Fully Recharge Spring:	MS
34.2.30	Rated Operating duty cycle	O – 0.3Sec – CO -3min -CO
34.2.31	Rated out of phase switching capability to IEC 56	
34.2.32	Operating Power Consumption	
34.2.32.1	Trip Coil	
34.2.32.2	Closing Coil	
34.2.32.3	Operating Motor	
34.2.33	Number of trip coils	2
34.2.34	Quantity of Gas in CB	
34.2.34.1	Mass	
34.2.34.2	Volume at Normal Pressure	
34.2.35	Interrupting Gas Pressure Maximum / Normal / Minimum	
34.2.36	Number of Close / Open Operation possible without re-charging	
34.2.37	Number of operations possible before interrupter maintenance required	
34.2.37.1	At rated S.C. current	
34.2.37.2	At full load current	

DocUUID : ef633536-12e1-468c-ba98-703264fe0eb1

34.2.37.3	At no load	
34.2.38	Method used to relieve internal overpressure due to short circuit (Bursting disc / relief valve / none. Etc.)	
34.2.39	Operating pressure of pressure relief device	
34.3	CURRENT TRANSFORMERS	
34.3.1	Manufacturer and Model No	
34.3.2	Voltage class, insulation level and short time rating	As specified for switchgear
34.3.3	Type	Solid Insulation
34.3.4	Class of insulation	Class E or better
34.3.5	Ratio	As per SLD
34.3.6	Number of secondaries	As per SLD
34.3.7	Accuracy class	
34.3.7.1	Protection core	5P20
34.3.7.2	Protection (Diff. / REF)	PS
34.3.7.3	Metering	0.2s
34.3.8	Burden (VA)	Adequate for the protection & instruments offered i.e atleast 1.5 times the connected burden.
34.3.9	Excitation current of PS Class CTs	30 mA at Vk/4
34.4	VOLTAGE TRANSFORMERS	
34.4.1	Manufacturer and Model No	
34.4.2	Type	Cast resin, single phase unit
34.4.3	Rated Voltage	
34.4.3.1	Primary	66000/sq.rt.3
34.4.3.2	Secondary	110V/sq.rt.3
34.4.4	No. of phases	3
34.4.5	No. of secondary windings	2
34.4.6	Method of connection	Star/Star
34.4.7	Rated voltage factor	1.2 continuous, 1.9 for 30 seconds
34.4.8	Class of insulation	Class E or better
34.4.9	Accuracy class	
34.4.9.1	Protection	3P
34.4.9.2	Metering	0.2
34.5	SURGE ARRESTORS	

DocUUID : ef633536-12e1-468c-ba98-703264fe0eb1

34.5.1	Rated Voltage	60 kV
34.5.2	Maximum continuous operating voltage (MCOV)	52 kV
34.5.3	Nominal discharge current (Amps) (8/20 micro sec. wave) peak value	10kA
34.5.4	Discharge class	3

35.0 ANNEXURE- B - SLDS

DocUUID : ef633536-12e1-468c-ba98-703264fe0eb1

ANNEXURE-B1

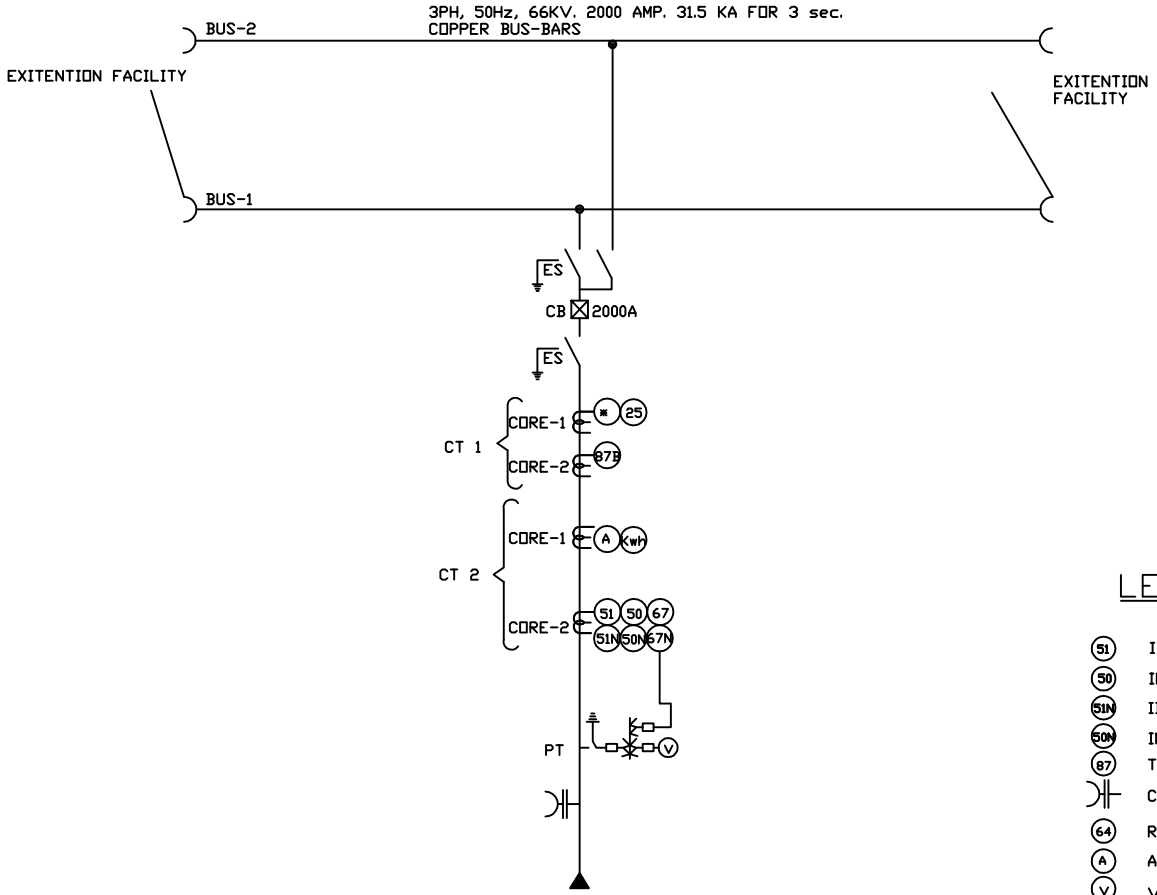

2X3CX300SQMM/3X1CX1000.AL.CONDUCTOR XLPE CABLES

CT-1
CORE1-1600-800/1A
ACCURACY-PS
Ie<-30mA at VK/4
Vk>40(Rct+4)V

CORE2-1600-800/1A
ACCURACY-PS
Ie<-30mA at VK/4
Vk>40(Rct+4)V

CT-2
CORE1-1600-800/1A
ACCURACY-0.2S
ISF>=10

CORE2-1600-800/1A
ACCURACY-5P20

PT
WINDING 1-66KV/√3/110/√3
CL-0.2

WINDING 2-66KV/√3/110/√3
CL-3P

LEGEND:

51	IDMT PHASE OVER CURRENT RELAY
50	INSTANTANEOUS PHASE OVER CURRENT RELAY
51N	IDMT EARTH FAULT RELAY
50N	INSTANTANEOUS EARTH FAULT RELAY
87	TRANSFORMER DIFFERNTIAL RELAY
	CAPACITIVE VOLTAGE INDICATOR
64	RESTRICTED EARTH FAULT RELAY (66 KV OF TRANSFORMER)
A	AMMETER WITH SELECTOR SWITCH
V	VOLTMETER WITH SELECTOR SWITCH
Kwh	ENERGY METER
*	LINE DIFFERENTIAL CUM DISTANCE OR DISTANCE RELAY AS PER TENDER DOCUMENT
67	DIRECTIONAL OVER CURRENT RELAY
67N	DIRECTIONAL EARTH FAULT RELAY
25	SYNCHRO CHECK RELAY
87B	BUSBAR PROTECTION

NOTE
1. REFER SPECIFICATION FOR DETAILED FUNCTIONAL REQUIREMENT OF RELAYS.

DRAWN	A.H/J.A	TITLE:- STANDARD SLD FOR 66KV INCOMER
CHECKED	S.G/A.S	
APPD.	G.S/G.N	
DATE	11.05.22	
SCALE	NTS	

BSES

SLD-GIS-66KV-01

ANNEXURE-B2

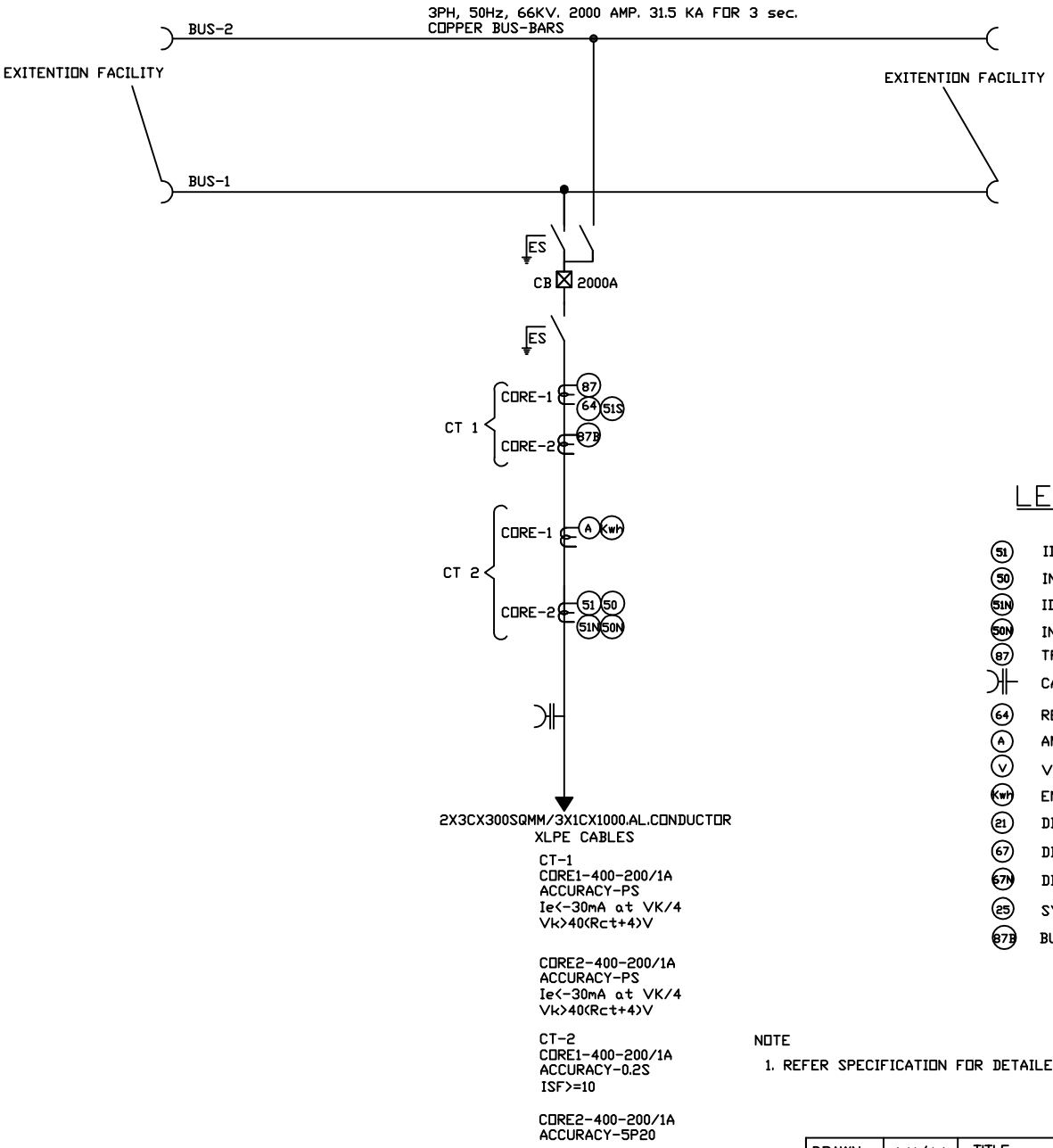

LEGEND:

- (51) IDMT PHASE OVER CURRENT RELAY
- (50) INSTANTANEOUS PHASE OVER CURRENT RELAY
- (51N) IDMT EARTH FAULT RELAY
- (50N) INSTANTANEOUS EARTH FAULT RELAY
- (87) TRANSFORMER DIFFERNTIAL RELAY
- CAPACITIVE VOLTAGE INDICATOR
- (64) RESTRICTED EARTH FAULT RELAY (66 KV OF TRANSFORMER)
- (A) AMMETER WITH SELECTOR SWITCH
- (V) VOLTMETER WITH SELECTOR SWITCH
- (Kwh) ENERGY METER
- (21) DISTANCE RELAY
- (67) DIRECTIONAL OVER CURRENT RELAY
- (67N) DIRECTIONAL EARTH FAULT RELAY
- (25) SYNCHRO CHECK RELAY
- (87B) BUSBAR PROTECTION

NOTE

1. REFER SPECIFICATION FOR DETAILED FUNCTIONAL REQUIREMENT OF RELAYS.

DRAWN	A.H/J.A
CHECKED	S.G/A.S
APPD.	G.S/G.N
DATE	11.05.22
SCALE	NTS

TITLE:-

STANDARD SLD FOR 66KV TRANSFORMER FEEDER

BSES

SLD-GIS-66KV-02

ANNEXURE-B3

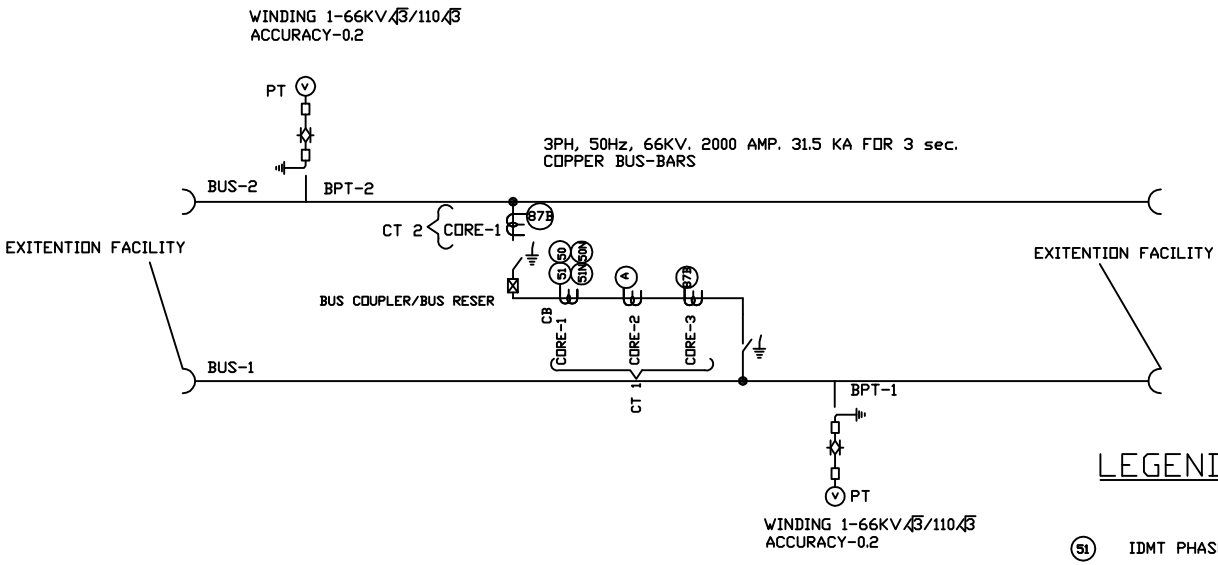

CT-1
CORE1-1600-800/1A
ACCURACY-5P20

CORE2-1600-800/1A
ACCURACY-0.5

CORE3-1600-800/1A
ACCURACY-PS
Ie<-30mA at VK/4
Vk>40(Rct+4)V

CT-2
CORE1-1600-800/1A
ACCURACY-PS
Ie<-30mA at VK/4
Vk>40(Rct+4)V

LEGEND:

- (51) IDMT PHASE OVER CURRENT RELAY
- (50) INSTANTANEOUS PHASE OVER CURRENT RELAY
- (51N) IDMT EARTH FAULT RELAY
- (50N) INSTANTANEOUS EARTH FAULT RELAY
- (87) TRANSFORMER DIFFERNTIAL RELAY
- CAPACITIVE VOLTAGE INDICATOR
- (64) RESTRICTED EARTH FAULT RELAY (66 KV OF TRANSFORMER)
- (A) AMMETER WITH SELECTOR SWITCH
- (V) VOLTMETER WITH SELECTOR SWITCH
- (kwh) ENERGY METER
- (21) DISTANCE RELAY
- (67) DIRECTIONAL OVER CURRENT RELAY
- (67N) DIRECTIONAL EARTH FAULT RELAY
- (25) SYNCHRO CHECK RELAY
- (87B) BUSBAR PROTECTION

NOTE
1. REFER SPECIFICATION FOR DETAILED FUNCTIONAL REQUIREMENT OF RELAYS.
2. ONE BPT TO BE PROVIDED FOR EACH BUS SECTION.

DRAWN	A.H/J.A
CHECKED	S.G/A.S
APPD.	G.S/G.N
DATE	11.05.22
SCALE	NTS

TITLE:-

STANDARD SLD FOR 66KV BUS COUPLER CUM BUS PT

BSES

SLD-GIS-66KV-03

BSES

Technical Specification

Of

66/33 kV Control and Relay Panel

Specification no – BSES-TS-86-CRP-R2

Rev:		2
Date:		26 Aug 2025
Prepared by	Shanmugam B	
Reviewed by	Uttam Shukla	
Approved by	Deepti R Sharma	

Contents

1.0 SCOPE 3
2.0 CODES AND STANDARDS 3
3.0 CYBER SECURITY 4
4.0 PANEL CONSTRUCTION 7
5.0 WIRING 9
6.0 TERMINAL BLOCKS 15
7.0 PAINT 17
8.0 MIMIC DIAGRAM 17
9.0 NAMEPLATES AND MARKINGS 18
10.0 EARTHING 19
11.0 NUMERICAL RELAYS 19
12.0 AUXILIARY RELAYS 32
13.0 SYNCH CHECK PHILOSPHY 35
14.0 MANAGED ETHERNET SWITCH 36
15.0 ANNUNCIATION 37
16.0 INSTRUMENTS 39
17.0 INDICATIONS 40
18.0 SELECTOR SWITCHES AND PUSH BUTTONS 41
19.0 CRP PANEL ACCESSORIES 42
20.0 APPROVED MAKES OF COMPONENTS 43
21.0 DEVIATIONS 44
22.0 DRAWINGS AND DATA SUBMISSION MATRIX 44
23.0 QUALITY ASSURANCE, INSPECTION & TESTING 46
24.0 PACKING 48
25.0 SHIPPING 49
26.0 HANDLING AND STORAGE 49
27.0 ABBREVATIONS 49
29. 0 ANNEXURE A, B, C, D, E

1.0 SCOPE

- This specification covers design, manufacture, testing at manufacturer's works, packing and delivery of control and relay panel (CRP) for 66kV and 33kV substations.
- The control and relay panel shall be complete with all components and accessories, which are necessary or usual for their efficient performance and trouble free operation under the various operating and atmospheric conditions. Such parts that may have not been specifically included, but otherwise form part of the CRP as per standard trade and/or professional practice and/or are necessary for proper operation of control and relay panel, will be deemed to be included in this specification.
- Scope also Includes-Licensed programming software and communication cord for offered numerical relays, one set of special tools and tackles (if any) required for maintenance of CRP and its components, Spares as per Annexure C, All relevant drawings, data and instruction manuals.

2.0 CODES AND STANDARDS

Control and Relay panels strictly designed and manufactured in accordance IS/IEC Std standards & purchaser requirements for smooth of the primary system equipments for proper power distribution.

Sl no.	Heading	Function Description
2.1	IS:1248, Part 1- 1993	Direct acting indicating analogue electrical measuring instruments and their accessories.
2.2	IEC:60688	Electrical measuring transducers.
2.3	IS:3231, Part 1- 1986 Part 2 &3 -1987	Electrical relays for power system protection.
2.4	IS:12729	Routine tests.
2.5	IEEE: 908-2018	Standard Guide for Safety in Substations.
2.6	IS:9000 Part 1 -1988	Basic environmental testing procedures for electronics & electrical items.
2.7	IEC:60255 / IEC61000	Specification for electrical relays. Measuring relays and protection equipment.
2.8	IEE:C37.24-2018	Standard for Power System Relaying terms and definitions.
2.9	IEEE:C37.90-2005	All Protection Trip Relays.
2.10	IEEE:C37.112- 2010	Guide for relay application in power systems.
2.11	IS:9000 part1-1998	Basic environmental testing procedures for electronics & electrical items.
2.12	IEEE:80	Guide for Safety in AC Substation Design.
2.13	IS:13703 - 1993	Low voltage fuses for voltages not exceeding 1000V AC or 1500V DC.
2.14	IEC:60629	Low Voltage fuses.
2.15	IEC:60282	High Voltage fuses.

2.16	IS:9244(part3) / IS:13703	HRC fuses.
2.17	IS:694	PVC insulated cables for working voltages upto and including 1100V.
2.18	IS:722	AC Electricity meters.
2.19	IEC:61850	Communication Networks and Systems in substations.
2.20	IEC:60529	Degrees of Protection provided by Enclosures.
2.21	IS:2982	Copper conductor in insulated cables.
2.22	IS:3961 (part1-part5)	Current rating for cables.
2.23	IS:5831	PVC insulating and sheath of electrical cables.
2.24	IS:375	Auxiliary wirings.
2.25	IS 2165 – 1977	Impulse withstand
2.26	BSS 162 – 1961	Indoor switchgear air clearance
2.27	IS 3042 – 1966	Earthing system
2.28	IS:1248	Indicating instruments and other applicable standards.
2.29	IEC:62351	Cyber Security type tests of IEDs/Numerical relays/Gateways/Transformer Tap controllers/Changers, etc with IEC 61850, IEC101, IEC103, IEC104 communication protocol network systems.
2.30	IEC:27036 IEC:20243 IEC:62443	Supply Electrical Devices from outside India, type tests for communications, cyber security conformance tests.
2.31	IEC:60973	OFC used for various equipments & panels located in AC/DC Switchyards, Control rooms, valve halls to transmit the required signals for integration, control, monitor, etc.

3.0 CYBER SECURITY

Sl no	Heading	Function description
3.1	Reference Standards	IEC:61850 – 5 to 10, IEC:27036, IEC:20243, IEC:62443, IEC:62351 and other relevant standards of IS/IEC/ANSI/IEEE,etc must be incorporated and Rules & Standards of Govt. of India, Ministry of Power/Other Central, State Departments & International best practice on Cyber security in Electrical Power Systems.
3.2	Policy	The documented type test & conformance valid parameters for a set of business rules and process for protecting information, computer resources, networks, devices,

		electrical/electronic programmable devices, software's, industrial control systems and other Information Technology (IT) / Operation Technology (OT) systems shall be used to protect a sensitive & critical infrastructure of Electrical Power generation, transmission, distribution in protections, control operations, measurements, monitoring purposes.
3.3	Cyber Security Threats, Violations, Incidents, Unauthorized access on Power System ITs/OTs.	Cyber security violation/incident occurs by unauthorized or illegitimate accessor a person, group of persons, entity, of data, applications, services, networks and/or devices through bypass of the underlying cyber security protocols, policies and mechanisms resulting in the compromise of the confidentiality, integrity or availability of data/information maintained in a computer resource, protection equipment's, protection devices, sensors, meter devices, mechanism, automation, RTUs, PLCs, SCADA and other connected within respective electrical utilities & organizations.
3.4	Cyber Security systems	The cyber security of electrical power systems/ networks shall be available to protect the security, integrity and reliability. The protection of IED's/other Electric/Electronic devices information (or data's) against unauthorized or destruction whether accidental or intentional.
3.5	Critical Assets	The critical assets shall be of system, equipments and facilities which, if destroyed, degraded or otherwise declared unavailable, would affect the reliability or operability of the electrical power system.
3.6	Type test reports IEC:62443, IEC:62351 (India made devices)	The IEDs, RTU, FRTUs, PLCs, SCADA, Communication network switches, any related programmable software's/hardware's, etc systems that involved in electrical power sector for control & monitoring critical information shall be verified for a sample size for testing minimum one number from each make, type and having same firmware version for the supply one lot size of 200 numbers or less.
3.7	Type test reports IEC:62443, IEC:62351 (India made devices)	The Smart meters, other energy meters the sample six for testing shall be minimum one number for each make, type and have same firmware version for the supply one lot size of 5000 numbers or less.
3.8	Type test reports IEC:27036 IEC:62443 IEC:62351 IEC:20243 (Other country made devices)	The IEDs, RTU, FRTUs, PLCs, SCADA, Meters, Communication network switches, any related programmable software's/hardware's, etc systems that involved in electrical power sector for control & monitoring critical information for importing products/system shall be verified for a sample size 5% of the supply lot for each make, type and having same firmware version for the supply lot.

3.9	Protection & Control devices, Network & Programmable devices of substation equipments	The IEDs, Communication Networks related devices, Software's, Hardware's in relation of critical electrical equipment which ever transfer data files, control & monitoring data files within power sector, state utilities for reliable power sector, which is a strategic & critical sector.
3.10	RBAC	Role Based Access Control a form of identity based access control where the system entities that are identified and controlled function positions in an organization or process.
3.11	IED'S like Protection devices, Control devices.	Communication protocol conformance standards shall be followed as per IEC 61850-5 to IEC 61850-10 and respective clauses.
3.12	RTUs,FRTUs,SCADA, PLC, etc with IEC communications.	Communication protocol conformance standards shall be followed as per IEC:60870-5-101/ IEC:60870-5-103/ IEC: 60870-5-104 and respective clauses.
3.13		Protocol Security conformance standards shall be followed as per IEC:60870-7, IEC:62351-100 part1&3 and respective clauses.
3.14	Smart meters with IEC 62056	Protocol Security conformance & Communication protocol conformance standards shall be followed as per IS:15959 series, IS:16444 series and respective clauses.
3.15	Mandatory tests case	The test is referencing a clause that is mandatory in IEC: TS 62351-5, IEC: TS 60870-5, IEC: 62351-3 which defines the requirements related to the authentication/encryption protocol, procedures and methods to be implemented at Fiber, TCP/IP(transport) level, Modbus, etc.
3.16	Approved/ Designated Laboratories	Central Power Research Institute (CPRI) approved laboratory for IEDs, RTU, FRTUs, SCADA, PLC systems. Central Power Research Institute (CPRI) Electrical Research & Development Association (ERDA), Yadav Measurements Pvt Ltd(YMPL) for Smart meter devices. If any other departments if approved shall be as per Ministry of Power/Other related departments for confirmation of Cyber security in power systems. If any changes according to Govt.rules/notifications/MoP,etc the same shall be incorporated time to time without cost implications.
3.17	Miscellaneous	Words and expressions used and not identified in these above regulations but defined in the information technology Act 2000 and the Electricity Act, 2003 shall be followed for cyber security of power system time to time.
3.18	Certificates Validity	Product certifications/type test reports of any Electrical/Electronic devices connected in power systems for respective protection/functions/controls/monitoring shall not be older than 5 years during supply of same items.
3.19	Reports	All necessary type test reports, certifications shall be submitted for CRP panel/ Equipments at Pre Bid / Engineering/ Inspection by supplier/vendor.

4.0 PANEL CONSTRUCTION

Sl no.	Heading	Function Description
4.1	Panel Type	Simplex panels with Height: 2200 Width min.1000mm to max.1200mm and Depth min.800mm and Total Height 2315mm (Inc. AV pad and Base frame). Equipment shall be mounted on the front of the panel and doors for wiring access shall be at the back of panels. Size of panel shall be decided during engineering.
4.2	Enclosure type	Completely metal enclosed and dust, moisture and vermin proof. Degree of protection not less than IP4X in accordance with IS 13947.
4.3	Enclosure material	Pre-galvanized, cold-rolled sheet steel of thickness not less than 2mm. Stiffeners shall be provided wherever necessary.
4.4	Doors	Double leaf doors shall be provided at the rear. Doors shall have handles with built-in locking facility. Doors hinged with padlocking type / Locks of the door shall be lever type(min 130º hinges). Door handles shall be of protruding type with three point locking facility as per industrial standards of IS/IEC.
4.5	Mounting plates	Mounting plates inside the cabinet's sheet steel of 3mm. Vertical front panel equipment mounted thereon and having wiring access from rear for relays. Any wiring between enclosures or mounting plates to the door shall be performed in cable conduits made of lupolen with fireproofing along with suitable conduit clips, providing conduit fixing, strain relief and cable tie eyelets.
4.6	Drawing placement	In each panel door shall be equipped with >A3 size steel pocket for wiring plan/scheme drawing/ test report, FAT, SAT reports, SOP, maintenance register, etc., placement and removals with safe hands by human.
4.7	Gland Plate	At least four separate gland plates of removable type with gasket shall be provided for each panel. They shall be of sheet steel of thickness not less than 3 mm.
4.8	Cable Entry	Shall be from the bottom unless otherwise specified.
4.9	Cable clamping	Cable glands shall not be used to support control cables. Vendor must provide clamping arrangement of control cable.
4.10	Gaskets	All doors, removable covers of panels shall be Gasketed all around with synthetic Neoprene/EPDM gaskets as per IS: 11149. However, XLPE gaskets can also be fixing protective glass doors.
4.11	Ventilating louvers	Ventilating louvers (Top/bottom) required & shall have screens and filters. The screens shall be made of either brass or GI wires mesh.

4.12	Foundation	The panels shall be fixed on the embedded foundation channels with intervening layers anti vibration strips made of shock absorbing materials.
4.13	Base Frame	Base frames shall be supplied along with panels. 100mm channel painted black.
4.14	Mounting	Equipment on front of panel shall be flush mounted. No equipment shall be mounted on the doors.
4.15	Equipment mounting	The center lines of switches, SLDs, push buttons and indicating lamps, 750mm and 1100mm. Height of aux.relays, meters >300 mm from the bottom of the panel and Numerical relays fix at 1200~1600mm from panel base. (shall be decided during engineering stage) SLD, MFM, TVM, Control switches, indication lamps between 650mm~1150mm from bottom of panels. From 1200 ~ 1600 mm protection relays. (shall be decided during engineering stage)
4.16	Device access	All panels shall have maintenance access to the hardware and wiring through lockable full height doors.
4.17	Appearance	The center lines of switches, push buttons and indicating lamps shall be matched to give a neat and uniform appearance. Likewise the top lines of all meters, relays and recorders etc, shall be matched.
4.18	Fluorescent Lamps for illumination	Enclosure lighting with fluorescent tube light with quick-start facility, suitable for local LVAC supply and controlled by a door or swing frame operated switch shall be fitted at the top of each single cubicle or cabinet part.
4.19	Panel illumination	All panels should be provided 240V AC illumination lamp with white LED lights 15W~20W rating at front and rear for illumination. Limit switches should be provided on the doors to control the switching.
4.20	Heater Circuits	All panels should be provided with heater, thermostat, hygrostat for controlling moisture and should be installed on safe location inside the panel.
4.21	Auxiliary power	All panels shall be supplied with 230V AC, 50Hz Single phase, 5A switches & duplex socket arrangement for maintenance.
4.22	Power Socket and switch	240V, 5/15A universal type socket to be provided in each panel with on-off switch.
4.23	MCBs and Fuses	Provision for receiving, distribution, isolation and fusing of DC and AC supplies to various control circuits should be made using MCBs, RCDs, RCCBs, ELM and HRC Fuses of appropriate ratings as per purchaser requirements.
4.24	Logo	BSES logo shall be fixed at Top - left of panel.

4.25	Make	ABB/HITACHI/SIEMENS/SCHNEIDERELECTRIC/GE
4.26	Cable Trays and NS enable support	Perforated / ladder type (Galvanized Iron) with cover for laying all types of the cables. Installation of cable trays with accessories or trench as required for the cabling work.
4.27	Cable Gland	Double compression cable glands (Materials – Brass and Stainless Steel & Suitable for Industrial Grade) of different sizes for cable entry into the RTU, DCU, CRP & Other panels.
4.28	Corner Edge	There shall be no sharp corners or edges. All edges shall be rounded to prevent injury.

5.0 WIRING

Sl no.	Heading	Function Description
5.1	Internal wiring	All wiring shall be carried out with 1100V grade single core multi strand flexible copper conductor wires with PVC insulation and shall be Flame Retardant Low Smoke (FRLS) type, vermin and rodent proof. The current carrying capacity of wire shall be adequate for the duty assigned to it considering short circuit condition and shall have sufficient flexibility to facilitate proper termination at any location. Make of wire shall be of Polycab/KEI/Finolex,etc.
5.2	Wiring size	Energy metering : CT,VT circuits of 2.5 SQ.MM Current Transformer : CT circuits of 2.5 SQ.MM Voltage Transformer : VT circuits of 2.5 SQ.MM Control Circuits(ckts) : DC circuits of 1.5 SQ.MM Tripping ckts : DC circuits of 2.5 SQ.MM DC Bus wirings : DC circuits of 4.0 SQ.MM AC & Earthing ckts : Unless otherwise specified shall be of 2.5 SQ.MM. In case of space constraint imposed by equipment terminal blocks 1.5 Sq mm wire shall be allowed after prior approval for RTU/SCADA signal ckts.
5.3	Color Code	
5.3.1	Current Transformer (CT) circuits	RED, YELLOW, BLUE, BLACK.
5.3.2	Voltage Transformer (VT or PT) circuits	RED, YELLOW, BLUE, BLACK.
5.4	Cable wiring colours	DC Control Circuits : GREY. AC Circuits : WHITE. Earthing Circuits : YELLOW-GREEN.

5.5	DC Bus wiring	The DC wire 4.0SQMM conductor of extra flexible class 6 conductors with insulation Red & Black TPE of Double sheath transparent PVC(Type TM2 to VDE0207) or XLPO cable [min.1100 – max.1800Vdc rated] shall be used with temperature rating -25˚C to +70˚C.
5.6	Ferrules	Ferrules marked to correspond with panel wiring diagram shall be fitted at both ends of each wire. Ferrules shall fit tightly on the wire. Heat shrinking ferrule sleeves with printed ferrules to be used for identifying cables & signals.
5.7	External cables	The supplied cable shall be as per latest IS std, also refer control cable specification &Armoured cables should be supplied for tray/trench applications.
5.8	AC & DC Circuits ferrules	CT,VT circuits, Control ckts, AC/DC ckts, Earthing ckts : WHITE tube with BLACK text letters.
5.9	Tripping Circuits	Tripping ckts : RED tube with WHITE text letters Note: In case of tripping circuits "T" marked in ferrules. Example: K101T.
5.5	Termination	Fork type, pin type and ring type (as applicable) tinned copper lugs to be used. Only ring type lugs should be used in CT circuits. Insulated sleeves shall be provided at all the wire terminations. All the lugs shall be Dowells / Jaison make only.
5.6	Wiring Enclosure	Plastic channels to be used as enclosures. PVC sleeves to be used for interpanel wiring.
5.7	Spare Contacts	Spare contacts of relays and contactors etc. should be wired up to the terminal block.
5.8	Inter-panel wiring	When panels are arranged to be located adjacent to each other inter panel wiring of common bus wires between the panels should be supplied with one end terminated and the other end bunched and coiled with proper lugs crimped and insulation for safe handling at site. Inter panel wiring shall be clearly indicated in the wiring tables. Longitudinal troughs extending throughout the full length of the panel shall be preferred for inter panel wiring. Inter-connections to adjacent panel shall be brought out to a separate set of terminal blocks located near the slots of holes meant for taking the inter-connecting wires. Wiring termination at interface panel end shall be through prefabricated plug-in type connectors.
5.9	FO patch chord	The FO patch chord between interpanel shall be run through separate longitudinal troughs inside panels and flexible PVC conduits for cross section between panels, Ethernet switch sides, Numerical relays side with proper insulations.

5.10	RS485	2P X 0.5 SQMM Screened GI Armored RS485, Twisted pair(2 pair), 22 Gauge Belden, 98428761 or equivalent for external (RTU to BCU, BCPU, MFM, BATT.CHG, TVM, Annunciations, Transformer Monitoring Devices, Load shedding, Cyber security devices, DCU, other devices whichever applicable with RS485 communication as per BSES requirements.
5.11	RJ45 – CAT6 cable	Ethernet cables (CAT6) with conduit pipe for internal connections and GI armored cables for external connections.
5.12	Auxiliary supply	Auxiliary bus wiring for AC and DC supplies, voltage transformer circuits, annunciation circuits and other common services shall be provided on the same set of terminals in all the panels with proper segregation.
5.13	DC selection scheme	Individual DC source from DCDB with DC changeover selection switch for each panels. DC Bus wiring between panels shall be provided as redundancy of DC wiring circuits.
5.14	DC Safe Wiring methodology	Panel wiring shall be securely supported, installed by lacing, tying, readily accessible and connected to equipment terminals and terminal blocks. Accidental short circuiting of certain wires is likely to result in malfunction of equipment, such as CB closing/tripping of or Positive/Negative wires, these wires shall not be terminated on adjacent terminal blocks (Except source input DC positive/negative terminals).
5.15	Termination at TB	Maximum of two wires shall be at one side of terminal block allowed. Not more than two wires shall be connected to any terminals such terminal block, relay contacts, auxiliary relay, etc where ever wiring connected in CRP panels. If necessary additional looping with adjacent terminal blocks shall be allowed as per scheme requirements.
5.16	Spares	At least 20% spare terminals shall be provided with corresponding lugs fixed in it. These spare terminals shall be uniformly distributed on all terminal blocks.
5.17	External cables	The supplied cable shall be as per latest IS std, also refer control cable specification & Armored cables should be supplied for tray/trench applications.
5.18	**Fiber Optic (OFC) Armoured Cable**	
5.18.1	FO cable	Armoured multimode (OM2) with corrugated polymer coated steel tape uni-tube LSZH FO cable, Fiber count 6 nos, 62.5/125 µmfor external connections
5.18.2	Operating Temperature	-20ºC to +80 ºC.(Installation, Service, Storage)
5.18.3	Fiber	Multimode : 48nos
5.18.4	Fiber type	OM2 50/125

5.18.5	Max.Cabled Fiber attenuation dB/km	8500nm:3.5; 1300nm:1.5
5.18.6	Tensile load	Max Tensile load: Short Term = 2700N, Long Term = 800N.
5.18.7	Cable OD	Cable OD: 11.5 mm±0.25%
5.18.8	Cladding Diameter	Cladding Diameter: 125± µm
5.18.9	Standard	As per standards IEC 11801, EIA/TIA 568B.
5.18.10	Filling Gel	Thixotropic gel to prevent water ingress in loose tube (ITCO T 250)
5.18.11	Fiber per Tube	12nos.
5.18.12	Tube	4nos. (Thermoplastic Material PBT)
5.18.13	Central strength member filler	2nos. FRP reinforced plastic (FRP) to provide tensile strength and antibuckling properties.
5.18.14	Water blocking elements	Cable flooding gel is added in interstices of core to prevent water ingress in the cable cable (ITCO C 480)
5.18.15	Water penetration	1m heat, 3m samples, 24hr
5.18.16	Core covering	Binder & Polyester tape
5.18.17	Rip cord	2 nos Polyester based twisted yarn
5.18.18	Outer sheathing	UV Proof Black MDPE(ME 6052/ME 6056)
5.18.19	Optical Fiber colour	Blue, Orange, Green, Brown, Slate, White, Red, Black, Yellow, Violet, Pink, Aqua
5.18.20	Loose Tube colour	OM2: Brown
5.18.21	Other Sheath colour	Black
5.18.22	Drip Test	30cm, 70 ºC, 24hr
5.18.23	Type test	Type test shall be carried out as per IEC60793, IEC60794-1-2/GR20 std.
5.18.24	Attenuation	Change in attenuation shall be ≤0.05dB
5.19	**Fiber Optic Patch Cable (FO Patch Chord/Patch card)**	
5.19.1	Mode/Connector	Multimode Duplex with LC connector on both sides.
5.19.2	Operating Temperature	-40ºC to +80 ºC.
5.19.3	Loss	Insertion loss ≤0.2dB
5.19.4	Connector	Ceramic connector ferrule.
5.19.5	Repeatability	Repeatability should be less than 0.2dB, 100 mating cycle.
5.20	**Light Interface Unit (LIU)**	

5.20.1	Mounting	12 port wall mount / 19" panel mount LIU loaded with LC pigtails and adaptors with adaptor plates as per site requirements.
5.20.2	Steel	Aluminium / Stainless steel base material
5.20.3	LIU inner portion	LIU shall be provided with splice tray, cable spool provision inside for fiber connections.
5.20.4	Accessories	Cable ties, mounting ear screw, earthing & spiral wrap tubes shall be provided as per requirements.
5.20.5	Materials	Adaptor plate shall be made of Cold Rolled Steel material.
5.20.6	Insertion loss	Insertion loss ≤0.2dB for Zirconia sleeve.
5.21	LAN SWITCHES	
5.21.1	Cyber security	Compliance as per NERC CIP - 3,5,7 for cyber security
5.21.2	SNMP	Support SNMPv3 (Full SNMP support including Traps)
5.21.3	Web interface	Web based GUI or CLI based with HTTPS/HTTP and SSH / Telnet support
5.21.4	IPvX support	Support for IPv4 & IPv6 switching simultaneously
5.21.5	Layer	Layer 3 static routing functionality
5.21.6	Syslog	Syslog facility for local as well as remote server
5.21.7	Remote support	Support for remote management
5.21.8	LED	LED indication for port status/supply etc.
5.21.9	VLAN	Shall support VLAN IEEE 802.1Q
5.21.10	IGMP	IGMP snooping
5.21.11	Spanning Tree	Spanning tree protocol IEEE 802.1d or RSTP IEEE 802.1w
5.21.12	SNTP	Shall support SNTP
5.21.13	IEEE	Shall support IEEE 1588 PTP
5.21.14	Network access	Port based network access control (IEEE 802.1x)
5.21.15	Quality	Quality of service (IEEE 802.1p)
5.21.16	IP traffic	Shall support unicast as well as multicast IP traffic
5.21.17	SNTP time	SNTP time synchronization
5.21.18	Mac	Shall support Mac Binding
5.21.19	Fan	Fanless design
5.22	**Cable Gland**	
5.22.1	Cable Gland	Double compression cable glands (Materials – Brass and Stainless Steel & Suitable for Industrial Grade) of different sizes for cable entry into the RTU, DCU, CRP & Other panels. The gland shall be robust and heavy duty.

5.22.2	Material	Brass as per IS-319 standard. If Aluminium/M.S/S.S IS:304/316)
5.22.3	Non-Armoured cable glands	Double compression cable glands for un-armoured cables providing 2 nos of environmental seal for the outer sheath of cables having universal clamping range, allowing the cable to be easily disconnected from the equipment, for maintenance and changeout, etc.
5.22.4	IS/IEC std	Gland shall comply to IS12943:1990/ IEC 62444, IEC 60529(Weather proof)
5.22.5	Temperature	Armored cable: -60ºC to +100 ºC, Un-Armoured cable: -30ºC to +100 º C.
5.22.6	Ingress protection	IP-67 weather proof glands as per IEC 60529:2001, IP-66 as per IS/IEC 60079 for armoured& un-armoured cables
5.23	**RS485 to RS232 converter**	
5.23.1	Power supply	Operating power supply ranges min.24 – 60V dc source.
5.23.2	Isolation of signals	Galvanic isolation of 1kV between RS485 & RS232 signals.
5.23.3	Nodes	Should support 32nodes on RS485 side.
5.23.4	Physical wiring	RS485 interface should support both 2 wire & 4 wire signals.
5.23.5	Communication range	Communication speed / data transfer rages shall be user selectable type.
5.23.6	Mounting method	Din Rail Mounting system
5.24	**RJ – 45Connectors**	
5.24.1	Standards	Applicable standards: EIA/TIA 568 C-2, IEC 60603-7-4.
5.24.2	Voltage & Current levels	Max. Voltage: 250Volts, Current: 2Amps.
5.24.3	Contact Resistance	Contact Resistance: 20m Ω.
5.24.4	IR value	Insulation resistance: 100MΩ.
5.25	**RS 485 Cable for serial communication**	
5.25.1	Dielectric	Dielectric withstand of 1KV, 50Hz AC for 1 min
5.25.2	Pair	2 pair/4 pair, 22 AWG(7x32), Tinned copper, PE insulation, Overall Beldfoil + tinned copper braided (90%) shielded, PVC outer jacket.
5.25.3	Impedance	Characteristics impedance shall be 120Ω.
5.25.4	Capacitance	Capacitance between conductors shall be less than 100pF/mtr. Conductor and shield shall be less than 200pF/mtr.
5.26	**Cable Tray**	
5.26.1	Type	Perforated / ladder type (Galvanized Iron) with cover for laying all types of the cables. Installation of cable trays with accessories or trench as required for the cabling work.

5.26.2	Standard	IS 1079
5.26.3	Steel	Cable trays shall be made of single MS sheet
5.26.4	Dimension	Widthx300mm, Depthx75mmx Thicknessx2mm. Coupling plates shall be 3mm thickness.
5.26.5	Connections	Cable tray shall be heavy duty and perforated type with matching fittings like elbows, bends etc and accessories like bolts, nuts, washers, GI strip, hook.
5.26.6	Edge	All tray corners shall be smooth and free from sharp edges.
5.26.7	Certificates	Test certificates shall be submitted during inspection for cable tray materials and Galvanizing coating.
5.27	Spare Contacts	Spare contacts of relays and contactors etc. should be wired up to the terminal block.
5.28	RTU to Substation devices hardwire connections / communications	Laying and Termination of armoured communication cables (Ethernet, Fiber Optic Patch chords/cards, FO cables, RS 485 cables) between Grid Devices (Numerical relays, Transformer monitoring devices/modules, TRF.M.Box, TRF.OLTC M.Box, Smoke detectors, CCTV n/ws, Cyber security, NIFPS panel, MFM, Battery Charger, Battery banks to RTU/DCU/Gateway with proper tagging and dressing up to RTU panel.
5.29	Other accessories	Supply of suitable glands, white sleeves PVC Ferrule with black text letter, tagging, lugs shall be scope of vendor's supply. RTU to all device communication with suitable cables shall be in scope of vendor's supply.

6.0 TERMINAL BLOCKS

Sl no.	Heading	Function Description
6.1	Rating and Type	Terminal Blocks (TB) of 1100 V grade, continuous current rating of max.35A on the terminals and non-breakable type. Molded piece, stud type screw terminals complete with insulated barriers, melamine housing brass terminals, washers, nuts and lock nuts. Screw clamp, overall insulated, insertion type, channel/rail mounted terminals can be used in place of stud type terminals as per requirements.
6.2	Suitability	Unless otherwise specified, terminal blocks shall be suitable for connecting the following conductors of cable on each side- a. All circuits including current / voltage transformer circuits: 6mm^2 flexible copper. b. AC / DC power supply circuits: one no of 10 mm^2 Al(aluminum)./ 6 mm^2 flexible Cu(copper).
6.3	Marking and covers	White fiber markings strip with clear plastic, slip-on / clip-on terminal covers to be provided and A reflective prints on HIP(High Intensity Prismatic) films which contain lens to reflect at night when light shines with clear plastic, slip-on /

		clip-on terminal covers to be provided in yellow stickers.
6.4	Disconnecting Facility	To be provided in CT,VT terminals.
6.5	Shorting & Earthing Facility	To be provided in CT, VT Terminals.
6.6	CT,VT terminals	Refer Single Line Diagram for details of CT,VT wiring/communications cables as per purchaser approved documents.
6.7	Spare Terminals	20% in each TB row. The spare terminals shall be provided with lugs mounted on it.
6.8	Segregation	TBs shall be segregated by application i.e separate terminal blocks shall be provided for each application as follows (a) CT (b) VT or PT (c) Circuit Breaker (d) Transformer Cubicle/OLTC Cubicle (e) Individual Bay Marshalling kiosk (f) Bus Isolator / Disconnector -1,2 (g) Line/Transformer Isolator / Disconnector -1 (h) Line Isolator-2 (i) Line/Transformer/Bus Earth Switch-1 (j) Line/Transformer/Bus Earth Switch-2 (k) Interpanel Bus wiring (l) RTU/SCADA wiring etc. (m) AC source ckts. (n) DC source ckts. (o) Announciation ckts. (p) Indication lamp ckts. (q) Metering ckts (r) Bus Inter-panel wiring ckts of AC/DC/VT/Control ckts.
6.9	Vertical clearance with gland plate	Minimum 250mm.
6.10	Clearance between two rows of TBs	Minimum 150mm.
6.11	Test Terminal Blocks	Screw driver operated stud type for metering circuits.
6.12	TB contact materials	The terminal shall be such that maximum contact area is achieved when a cable is terminated. The terminal shall have a locking characteristic to prevent cable from escaping from the terminal clamp unless it is done intentionally. The TB conducting part in contact with cable/wire shall be preferably tinned/silver/nickel/copper/zinc shall be preferred.

6.13	Arrangement	Arrangement of the terminal block assemblies and the wiring channel within the enclosure shall be such that a row of terminal block runs in parallel and close proximity to each side of the wiring duct. The side of the terminal block opposite the wiring duct shall be reserved for the external cable connection.
6.14	Categorization	For ease of external connections, terminal blocks shall be categorized based on their usage i.e all terminals for wiring of particular equipment like circuit breaker should form one terminal block.
6.15	Tightness	The Terminal block wiring shall be tight with respect to its function as per standard Torque limit wherever applicable as per IS/IEC Std and OEM recommended values.

7.0 PAINT

Sl no.	Heading	Function Description
7.1	Paint Type	Powder coated. Pure Polyester base grade-A, structure finish.
7.2	Paint Shade	Exterior: RAL 7032 “Siemens Grey”.
7.3	Paint Shade	Interior: RAL 9003 “Glossy White”.
7.4	Paint Thickness	Minimum 70 microns.

8.0 MIMIC DIAGRAM

Sl no.	Heading	Function Description
8.1	System Representation	Colored mimic diagram and symbols showing the exact representation of the system shall be provided in the front of control panels.
8.2	Material	Mimic diagram shall be made preferably of painted aluminum or plastic (approved material), which shall be screwed on to the panel and can be easily cleaned. Painted overlaid mimic is also acceptable. The mimic bus shall be 2-3 mm thick. The width of the mimic bus shall be 12mm for bus bars and 10 mm for other connections.
8.3	Mimic Indications	LED indications are to be used for breaker and isolator position and semaphore indicators shall be used for earth switch position.

9.0 NAMEPLATES AND MARKINGS

Sl no.	Heading	Function Description
9.1	Nameplates	To be provided as per the following description.
9.2	Equipment Nameplates	a. All equipment mounted on front side as well as equipment mounted inside the panels shall be provided with individual name plates with equipment designation engraved. b. All front mounted equipment shall be also provided at the rear with individual name plates engraved with tag numbers corresponding to the one shown in the panel internal wiring to facilitate easy tracing of the wiring.
9.3	Feeder Nameplates	(a) Large and bold name plate carrying the feeder identification numbers shall be provided for circuit / feeder designation on the top of each panel on front as well as rear side. (b) Rear bottom of each panel shall have a nameplate clearly indicating the following: (i) Purchaser Name (ii) BSES, PO No. & date (iii) Drawing Reference No (iv) Voltage Level, Bay No (v) Panel Serial No (vi) Year of Manufacture (vii) Control Voltage (viii) Customer care No
9.4	Material	Non-rusting metal or 3 ply lamacoid. Nameplates shall be black with white engraving lettering with reflection Or Reflective Stickers are allowed which have a reflective prints on HIP(High Intensity Prismatic) films which contain lens to reflect at night when light shines on them [Suitable text/background colours] with suitable base material fixture.(shall be discussed during engineering stage).
9.5	Fixing	All nameplates/rating plates shall be riveted to the panels at all four corners. Bolting/screwing is not acceptable.
9.6	Markings	Each switch shall bear clear inscription identifying its function. Similar inscription shall also be provided on each device whose function is not otherwise identified. If any switch or device does not bear this inscription separate nameplate giving its function shall be provided for it. Switch shall also have clear inscription for each position. Ex. Trip-Neutral close, ON-OFF etc.

10.0 EARTHING

Sl no.	Heading	Function Description
10.1	Panel Earthing	All panels shall be equipped with an earth bus securely fixed.
10.2	Location of earthing bus	Earthing bus shall be at rear side of CRP panel (Flush mounting front equipment back side).
10.3	Material	The material and the sizes of the bus bar shall be 25 x 6 mm copper flat unless specified otherwise. Bimetallic strips shall be provided in order to connect external earth grids as per site requirements.(if required)
10.4	Earth Bus joints	All bolted joints in the bus should be connection of two bolts.
10.5	Hinged Doors	Earthed through flexible copper braid wires of at least $16mm^2$.
10.6	Relays & Instruments earthing	All metallic cases of relays, instruments and other panel mounted equipment including gland plate, shall be connected to the earth bus by copper wires of size not less than 2.5 mm^2. The color code of earthing wires shall be yellow-green. The earth wire connecting at earth bar with copper bolt & nut. Each panel shall be provided with additional copper bolt & nuts throughout the earth bus bar with space between each bolt & nut. Only two wires permitted for each earth connection at a time.
10.7	CT and VT circuit earthing	CT and VT secondary neutral shall be earthed at one place only at the terminal blocks through links.
10.8	Electronics Earth Pit / Earth riser	All Numerical relays, Ethernet Switches, other Electronics products shall be equipped with Electronics Earth pits (min.2 no) separately as per IS standards, Industrial standards of practice.

11.0 NUMERICAL RELAYS

Sl no.	Heading	Function Description
11.1	**General features of Protection Numerical Relays**	
11.1.1	Relay details	All relay shall comply with latest cyber security guidelines. Relay-1 & Relay -2 shall be of same make. The Relay shall be finalized during details CRP panel scheme final approval and relays must fulfill site commissioning requirements with integration of RTU/SCADA system stage and it is deemed to be without any cost implications. All relays shall be provided with conformal coated. The repair cost within 5 years after lapse of warranty shall not be more than 30% of Relay

		purchase price.
11.1.2	Technology and Functionality	Numerical, Artificial Intelligence, Microprocessor based with latest version, provision for multifunction protection, control, metering and monitoring, etc
11.1.3	Coating	Conformal Type. Coatings shall also protect relays against corrosive gases such as H_2S or SO_2 other gases for safe & reliable function of Hardware/Firmware/Comm. modules.
11.1.4	Mounting	Flush Mounting, IP5X. In case of vents/perforations on Top of relay necessary wedge covers with side vents/perforations to be provided. Relays shall be fixed above 400mm from base plate.
11.1.5	Architecture	Hardware and software architecture shall be modular and dis-connectable to adapt the protection and control unit to the required level of complexity as per the application.
11.1.6	Redundant Ethernet Port	2xfiber, 2xelectrical port running PRP, HSR, Failover (two fiber pairs/two copper pair), Dual IP and a mixture of Fiber ports & Copper ports and Maintenance/Engineering port additional. ❖ Communication port: LC duplex/RJ45. As per protection & RTU/SCADA requirements.
11.1.7	Data Transfer rates	The Fiber port/Copper Ethernet ports connections shall be 1310nm with single mode/multi mode 100Base Fx – High speed data rates with multiple masters “Clients” capability.
11.1.8	Date Model layers	The Standard practice of Data model layer with Physical device, Logical device, Wrapper/Logical node instance, Data object, Data attribute shall be followed & meet latest IEC formats.
11.1.9	Protection relay System	The protection relay shall be carefully designed for independent electrically, physically from equipments of CRP and terminal wirings from other segregated circuits of primary systems & other associated panels during cable wiring connections.
11.1.10	Protection relay operation with primary system	The protection relays shall be carefully designed such a way that there will be no operational restrictions for control interlocks & operations of primary system equipments [SWGR / CB/ ISOLATOR / EARTH SWITCH, etc] of AIS / GIS / SWGR, etc. for its normal operations, including conditions of ON LOAD BUS TRANSFER function of individual feeders.
11.1.11	Relay interference with primary system	The relay must be carefully programmed with latest software, firmware, hardware versions for control, operations, Interlocking logics, GOOSE signals [interlock signals, reports measurement, IO signals] between IEDs for safe operation of primary system without abnormal protection alarms & events [Volt – functions like under/over volt/VT fuse fail; Current – CT supervision, protection starts or trip] in DCS/SAS/SCADA.
11.1.12	Protection relay & auxiliary interface	All protection relay shall be provided functions with internal timer logics for safe operations of respective binary input/output commands, aux.relay pickup/drop off for voltage

		selection & contact multiplications in scheme drawings. At any condition these aux.relays OFF/Fail/Mal operation conditions must not trip main primary system CB/SWGR devices. If any deviations which result power loss then suitable penalty imposed on vendor/supplier based on BSES standards & Indian Govt.rules of power ministry & other respective organizations. (Ex.CPRI, CBIP, CEA, PowerGrid, etc)
11.1.13	Power fails	No control relay, which shall trip the power circuit breaker when the relay is de-energized, shall be employed in the circuits.
11.1.14	Relay wiring circuits	All protection and its aux.relay wiring carefully provided in such a way that there should not be different voltage levels AC/DC volts (RTU volts/DC volts/ Other device volts) within a single relay IO module(NO,NC), aux.relay (NO, NC) contacts. This may cause unwanted magnetic interference between NO, NC contacts leads to failure of relay IO module/aux.relay contact failure and produce abnormal conditions for primary system of feeder.
11.1.15	Protection relay communication cable power limits	The attenuation and receive power shall be measured and confirmed to be within the specified limits as per relay OEM recommendations/instruction sheets/manuals.
11.1.16	Relay communication Protocol	IEC 61850-1, IEC 61850-9-2LE OR IEC 61850-9-2/IEC 61869 Flexible streams, IEC 60870-5-103, IEC 60870-5-104, MODBUS TCP, DNP 3.0 Serial/TCP, IEEE C37.94**,** IEEE 802.1X VLAN, LON, SPA, etc. shall be provided as per site requirements.
11.1.17	Advanced Security	Extensive security like AAA, Radius, RBAC(Role Based Access Control), logging of security-related events(Syslog), signed firmware, authenticated network access, etc.
11.1.18	Processing Indications	SCADA functions in monitoring direction shall be executed on SPI (Single Point Input) and DPI (Double Point Input). DPI shall only be used in case of Isolator and Circuit breaker “close” and “open” indication.
11.1.19	Command Processing	Functionality of command processing offered for SCADA interface shall include the processing of single and double commands i.e SCO (Single Command Output) and DCO (Double object command Output). DCO shall only be used in case of Isolator and Circuit Breaker “close” and “open” command. If any other commands shall be same discussed during engineering stage.
11.1.20	PC/Laptop Interface port	For each relay type one set of communication leads with necessary accessories/converters (USB type required- For PC/Laptop side) must be provided along with original licensed software of Unlimited users application (min.10 users) for all relay programming & settings, etc. The software and communication cable for each site must be provided separately without any cost implications.

11.1.21	Human machine Interface (HMI)	An alphanumeric key pad and graphical LCD display with backlight indicating measurement values and operating messages. It should be possible to access and change all setting and parameters without the use of PC.
11.1.22	GOOSE messaging	Relays shall communicate all status signals, commands, analog signals, interlocks signals and events on GOOSE messaging. Status of GOOSE signal shall be monitored. Goose signal shall be reported without time delay at SCADA & between IEDs.
11.1.23	Relay Characteristics	Relay shall integrate all necessary protections for different applications in accordance with IS and IEC. Relay shall provide wide setting ranges and choice of all IEC, IEEE, ANSI and other tripping curves through a minimum of three setting groups.
11.1.24	Relay Event & Fault records	i. Relay shall have the facility of recording of various parameters during event/fault with option to set the duration of record through settable pre fault and post fault time. ii. Relay should store last 100 events (minimum). iii. Relay should store last 10 fault records (minimum). iv. Fault/Disturbance records must be downloaded locally to PC/Laptop and to remote SCADA. v. Relay shall provided Maximum fault current value on 61850 for all the protection settings vi. Sys Log shall be store at IEDs & shall be retrievable via front/rear communication as per requirements.(If login & password protection required, the same shall be intimated to customer) vii. Relay should record waveform of not less than 1sec each which can be triggered through user selectable inputs such as Protection start, trip stage signals, Analog, Binary(BI/BO), Virtual/GOOSE signals and other user defined signals. The waveform record should support standard Comtrade file explorer software. Waveform recorder configuration should be user friendly. For Differential Protection relay, Waveform recorder of relay should record all differential and Bias current, REF volt/current along with standard Current and Voltage channel. All Virtual Signals(Input, Output), Commands should be user configurable as latched and un-latched. viii. Disturbance recorder shall have minimum recording time of 3 sec (0.5 sec for prefault and 2.5sec for postfault) per fault generated & shall be user settable.
11.2	**Relay supply and analog input, binary input & outputs ratings and details**	
11.2.1	Power supply	48 ~ 250V DC/AC universal power supply module as per purchaser requirement.

11.2.2	Temperature	-20ºC to +70ºC with humidity parameters.
11.2.3	Analog Module	Refer Single Line Diagram for details of CT,VT secondary circuit for wiring/communications as per purchaser approved documents. Example: CT 1/5 A AC; VT 110V AC.
11.2.4	Ratio corrections	Software based CT,VT Ratio & Vector corrections feature (Without Interposing CT, other CTs). Line/cable capacitive current compensation protection functions.
11.2.5	Thermal rating of voltage circuit	Continuous: 2xVn.
11.2.6	VA Burden	≤ 0.4VA.
11.2.7	Operating Frequency range of 50Hz	At least : 20 ~ 65 Hz.
11.2.8	High Break contacts	30VA, 40W (resistive loads), 25VA for L/R≤40ms 25W.
11.2.9	Operating time of contacts	≤ 12ms.
11.2.10	Transducer Input Module	Transducer 4 – 20mA inputs shall be required for as per site requirements.
11.2.11	RTD inputs	Resistance Temperature detection inputs shall be required as per site requirements.
11.2.12	PT100	PT100 inputs shall be required as per site requirements.
11.2.13	Binary Inputs	Opto coupler based binary inputs shall be provided.
11.2.14	Binary Output	Standard Output, High-speed Power Output contacts, etc shall be provided.
11.2.15	Binary Input & Binary Output signals	The following **primary equipment signals** shall be wired to the relays' binary inputs/outputs as applicable: For GIS/AIS Bays: ❖ **Circuit Breaker (CB)**: Status, control, operations, auto-reclose (A/R), breaker failure (LBB). ❖ **Disconnector & Earth Switches**: Status, control, operations, interlocking within the bay, with respect to busbars and bus coupler bays. ❖ **LCC Panel Signals**: ➢ Control operations, interlocking, DC fail, annunciation, circuit trouble alarms, and other necessary signals. wired to relays' binary inputs/outputs. ❖ **SF_6 Gas or Green Gas or Siemens Blue GIS**: **The SF6 gas (Sulfur hexafluoride)** for GIS equipments **Or** **Green potential gas (**a **potent greenhouse gas**, [C4-FN, CO2, N2,O2, CO2O2,etc]with a mixture of carbon dioxide

		(CO2), oxygen (O2), and small amounts of fluoronitrile (C4-FN) in their GIS equipment) For AIS Bays: ❖ **Circuit Breaker (CB)**: Status, control, operations, auto-reclose (A/R), breaker failure (LBB), SF_6 gas pressure low, lockout alarms. ❖ **Disconnector/Isolator & Earth Switches**: Status, control, operations, interlocking within the bay and with respect to busbars and bus coupler bays. ❖ **Panel & System Alarms**: Control signals, interlocking, DC fail, annunciator circuit trouble alarms, wired to the relays' binary inputs/outputs. For Other Devices: ❖ All relevant signals from **Transformers, OLTCs, Capacitor Banks, NIFPS**, **Ethernet switches, RTU/SCADA/DR Systems** and other equipment / devices, etc. The signals are to be taken from field equipments to numerical relays through hardwires. This list is indicative and signals should not be limited to this. Additional signals can be taken during review of actual drawings. The **final configuration and mapping** of all binary inputs and outputs shall be finalized during the detailed engineering stage based on site-specific requirements and approved design documentation as per BSES requirements only.
11.2.16	Spares	Binary input, Binary output of minimum 5% spare contacts must be provided other the scheme, which shall be wired upto spare terminal blocks for purchase use.
11.3	**Numerical Relay protection program, setting, signals, communication details**	
11.3.1	Relay capability	Relay programmable for logic, control, settings, events, fault recorders, GOOSE and block of unused ports. The LEDs shall be RESET via both HMI/Relay software/SCADA system shall be preferred. Software based Ratio & Vector corrections feature (Without ICTs). All programs/settings shall be with password lock facility is must.
11.3.2	Relay measurement	Relays shall communicate all measured and monitored parameters like current, voltage, active power, reactive power, apparent power, power factor, phase angle, event record, fault record, BIs ,BOs etc to SCADA.
11.3.3	Relays stability	High stability during external fault with heavy CT saturation due to transients.

11.3.4	Relay communication	Dedicated port for communication with remote end relay through optical fiber. This port should be in addition to PC/Laptop interface and SCADA interface ports. Necessary accessories must be provided like patch chords, LIU according to BSES requirements only to meet communication of relays.
11.3.5	Self-diagnosis	Relay shall be able to detect internal failures and same shall be transmitted to SCADA as a soft signal. A watchdog relay with changeover contact shall provide information about the failure for annunciation. Any binary input & output contact failure by internal a event shall be provided as alarm & report to SCADA. The IRF shall not be generated in such cases. Watchdog should be other than BO count. Two watchdog contact shall be provided as per purchaser requirements.
11.3.6	Time synchronization	All relays shall be capable of being synchronized with the system clock through SCADA, PC/Laptop, SNTP, IRIG-B, PTP. (To be discussed during engineering stage)
11.3.7	HMI Indication/LEDs	Multicoloured /Coloured LEDs with push button for resetting. RESET of LEDs must be provided via HMI/Relay software (PC/Laptop), SCADA(Work stations) possible from SCADA through dedicated function blocks.
11.3.8	Signal Integration for binary inputs & outputs	Relays must have provision for inversion of binary input signal High/Low as per control/protection logic requirements without affecting external wiring connections. All signal integration shall only be through NO,NC contact as per site & purchaser requirements.
11.3.9	Relay Function keys with Locking facility	Relay shall have properly defined function key set as per Protection requirements with locking facilities of Local/Remote control modes of functions.
11.4	**CRP Panels & Relay Sales, Service Supports**	
11.4.1	Numerical Relay performance	The relay performance certificates (<5 year) must be submitted by vendor as per IS/IEC std during bidding stages.
11.4.2	Num. Relay Life cycle	Protection relay shall be chosen in such a way that OEM supplier shall not phase out relay for next 10 years in International/India origin manufacturing units.
11.4.3	Num. Relay Rejection	Relays likely to be phased out in next 5 years must not be offered by vendor & if found offered will be rejected at any stage even post award/drawing approval/site execution.
11.4.4	Num. Relay Operation & Maintenance	The vendor shall supply relay such a way that where OEM supply support spare modules of relay if in case fail, relay configuration modifications along with updates as per firmware/software for 15 years duration after expiry of warranty period.
11.4.5	Warranty & Guarantee	Warranty & Guarantee should cover 66 months for CRP panel & numerical relays from supply.
11.4.6	CRP panel & numerical relay warranty	The vendor/supplier CRP panels all products & devices including numerical relays shall be five year warranty period from commissioned date. If any material found faulty during

		warranty period shall be replaced within min.24hrs to max.one weeks time. If purchaser replaced with any cost implication, the same shall be deducted or borne by vendor/supplier.	
11.4.7	Warranty sales & service supports	A service to enable any faulty items of protection equipments to be rectified or replaced within 24 hours by vendor or OEM during warranty periods. Suitable spares and support engineers shall be available to meet this equipment normalization without any additional cost implications & there by charging primary system for its stable operation & monitoring. If purchaser replaced with any cost implication, the same shall be deducted or borne by vendor/supplier.	
11.5	**Protection Relay Requirement for Line CRP (66kV/33kV)**		
11.5.1	Relay 1: M1FP	Line/Cable Differential protection(two/three terminals), Line/Cable Distance protection of relay with latest version & necessary additional protection functions as per site requirements.(shall be decided during detailed engineering)	
		Combine Line/Cable differential (Dual Channel, ST/SC/LC port compatible for Single Mode fibre having wavelength min.1310nm max.1510nm.(shall be decided during detailed engineering)	
		Distance Protection	
		Current Protection: Dir.OC, Dir.EF, Ins.OC, Ins.EF, TOC, TEF etc. each of min.3 stages shall be provided.	
		Voltage Protection: OV, VT Fail, etc.	
		Power Swing Block, Broken Conductor	
		Auto reclose functions (3phase) with its enable/disable, interlock inputs internal logic/external inputs shall be provided. (if OHL Fdr ckt)	
		Block Auto Reclose internally or externally at local end and facility to send blocking signals to remote end relay internally (through FO Communication Channels) during SOTF trips.	
		Other protection & control logic functions shall be decided during engineering stage.	
		Communication port	1. ST/SC/LC – Line/Cable Differential OFC. 2. 2xLC duplex FO/2xRJ45 copper – SCADA. (shall be decided during detailed engineering)
		The relay shall have features to test at one end all the functions associated with the protection, without the presence of personnel at the remote end.	
		The relay shall have inter-tripping compliant with IEC60834-1 & IEC 60834-2 respectively for signaling as appropriate.	
		These includes necessary optical fiber cable & associated accessories for connection between the current differential	

		relay panel and existing fiber optic distribution panel(FODP).
		The attenuation and receive power shall be measured and confirmed to be within the specified limits as per relay OEM recommendations/instruction sheets/manuals.
11.5.2	Relay 2: M2FP	Bay control relay of 3 phase operations of Isolators/Disconnector, Circuit Breaker, Earth Switches with latest version & necessary additional protection functions as per site requirements.(shall be decided during detailed engineering)
		Current Protection: Dir.OC, Dir.EF, Ins.OC, Ins.EF, TOC, TEF etc. each of min.3 stages shall be provided.
		Voltage Protection: UV, OV, Sync, VT Fail, etc.
		Auto reclose functions (3phase) with its enable/disable, interlock inputs internal logic/external inputs shall be provided. (if OHL Fdr ckt)
		Reverse Blocking Function.
		Local Breaker Backup protection, Broken Conductor functions.
		Other protection & control logic functions shall be decided during engineering stage.
		Communication port: 2xLC duplex FO/2xRJ45 copper – SCADA. (shall be decided during detailed engineering)
11.5.3	Configurable Binary input/outputs	Relays Analog, Binary inputs, Binary outputs shall be provided as per scheme requirements with additional 4 BI, 4 BO for future use.
11.5.4	SLD	Refer annexure E1 and E5 for SLD of 66kV and 33kV line bays respectively or Refer Single Line Diagram as per purchaser approved documents.
11.6	**Protection Relay Requirement for Transformer CRP (66kV/33kV)**	
11.6.1	Relay 1: M1PTP	Two or Three winding low impedance biased differential protection / high impedance differential protection & necessary additional protection functions as per site requirements.(shall be decided during detailed engineering)
		2nd Harmonic & 5th Harmonic function.
		Current Protection: Dir.OC, Dir.EF, Ins.OC, Ins.EF, TOC, TEF etc. each of min.3 stages shall be provided.
		Overflux protection.
		StandBy EF (HV/LV), Sensitive EF (HV/LV) protections.
		Other protection & control logic functions shall be decided during engineering stage.
		Communication port: 2xLC duplex FO/2xRJ45 copper – SCADA. (shall be decided during detailed engineering)
11.6.2	Relay 2: M2PTP	Bay control relay of 3 phase operations of

		Isolators/Disconnector, Circuit Breaker, Earth Switches, OLTC operations with latest version & necessary additional protection functions as per site requirements.(shall be decided during detailed engineering)
		Current Protection: Dir.OC, Dir.EF, Ins.OC, Ins.EF, TOC, TEF etc. each of min.3 stages shall be provided.
		Voltage Protection: OV, Sync, VT Fail, etc.
		Frequency Protection: OF, UF, df/dt, etc.
		Local Breaker Backup protection, Broken Conductor functions.
		Local Breaker Backup protection, Broken Conductor functions.
		Other protection & control logic functions shall be decided during engineering stage.
		Communication port: LC duplex
11.6.3	Configurable Binary input/outputs	Relays Analog, Binary inputs, Binary outputs shall be provided as per scheme requirements with additional 4 BI, 4 BO for future use.
11.6.4	SLD	Refer annexure E2 and E6 for SLD of 66kV and 33kV transformer bays respectively or Refer Single Line Diagram as per purchaser approved documents.
11.7	**Protection Relay Requirement for Bus Coupler CRP (66kV/33kV)**	
11.7.1	Relay 1: M1BCP	Protection functions as per site requirements.(shall be decided during detailed engineering)
		Voltage Protection: OV, UV, Sync, VT Fail, etc.
		VT fuse fail monitoring Bus-2 VT ckt
		Other protection & control logic functions shall be decided during engineering stage.
		Communication port: 2xLC duplex FO/2xRJ45 copper – SCADA. (shall be decided during detailed engineering)
11.7.2	Relay2: M2BCP	Bay control relay of 3 phase operations of Isolators/Disconnector, Circuit Breaker, Earth Switches with latest version & necessary additional protection functions as per site requirements.(shall be decided during detailed engineering)
		Current Protection: Dir.OC, Dir.EF, Ins.OC, Ins.EF, TOC, TEF etc. each of min.3 stages shall be provided.
		Voltage Protection: OV, UV, Sync, VT Fail, etc.
		Local Breaker Backup protection functions.
		Reverse Blocking Function.
		Other protection & control logic functions shall be decided during engineering stage.

		Communication port: 2xLC duplex FO/2xRJ45 copper – SCADA. (shall be decided during detailed engineering)
11.7.3	Configurable Binary input/outputs	Relays Analog, Binary inputs, Binary outputs shall be provided as per scheme requirements with additional 4 BI, 4 BO for future use.
11.7.4	SLD	Refer annexure E3 and E7 for SLD of 66kV and 33kV bus coupler bays respectively or Refer Single Line Diagram as per purchaser approved documents.
11.8	**Protection Relay Requirement for Capacitor Bank CRP (66kV/33kV)**	
11.8.1	Relay 1: M1CBP	Current Protection: Dir.OC, Dir.EF, Ins.OC, Ins.EF, TOC, TEF etc. each of min.3 stages shall be provided.
		Frequency Protection: UF, df/dt, etc.
		Out of balance protection with Close inhibit function with timer with min.0.0 sec to max.60 minute.
		Over load protection
		Under Current protection
		Other protection & control logic functions shall be decided during engineering stage.
		Communication port: 2xLC duplex FO/2xRJ45 copper – SCADA. (shall be decided during detailed engineering)
11.8.2	Relay 2: M2CBP	Bay control relay of 3 phase operations of Isolators/Disconnector, Circuit Breaker, Earth Switches with latest version & necessary additional protection functions as per site requirements.(shall be decided during detailed engineering)
		Current Protection: Dir.OC, Dir.EF, Ins.OC, Ins.EF, TOC, TEF etc. each of min.3 stages shall be provided.
		Voltage Protection: OV, UV, Sync, VT Fail, etc.
		Frequency Protection: OF, UF, df/dt, etc.
		Reverse Blocking Function.
		Local Breaker Backup protection, Broken Conductor functions.
		Other protection & control logic functions shall be decided during engineering stage.
		Communication port: 2xLC duplex FO/2xRJ45 copper – SCADA. (shall be decided during detailed engineering)
11.8.3	Configurable Binary input/outputs	Relays Analog, Binary inputs, Binary outputs shall be provided as per scheme requirements with additional 4 BI, 4 BO for future use.
11.8.4	Stabilizing resistor & Metrosil	The protection relays which requires setting of stabilizing resistor, non-linear resistor (Metrosil) shall be provided for protection functions as per site requirements.(shall be decided during detailed engineering)

11.8.5	SLD	Refer annexure E4 and E8 for SLD of 66kV and 33kV capacitor bays respectively or Refer Single Line Diagram as per purchaser approved documents.		
11.9	**RTU/SCADA Interfacing of Protection Systems details**			
11.9.1	The following signals shall be hardwired between SCADA/RTU & Protection panels for reference only. (To be discussed with SCADA Dept)			
11.9.2	Analog Inputs	All analog inputs shall be SCADA Compatible. I. mA inputs for Tap Position II. mA inputs for Temp OTI III. mA inputs for Temp WTI_HV IV. mA inputs for Temp WTI_LV V. mA inputs for DC voltage monitoring VI. mA inputs for DC current monitoring VII. mA input spare VIII. mA input spare & min 4 spares for purchaser use. 1. RTD sensor, PT100 inputs min 4 spares for purchaser use.		
11.9.3	Binary Input & Binary Output	The Protection Binary input & Binary output signals shall be provided based on CRP panels, Transformers, NIFPS, AC/DC Distributions, Battery, Chargers, etc signals as per scheme and site requirements.		
11.10	**Binary Input signals of CRP Panel Line, Transformer, Bus coupler, Capacitor**			
Binary Inputs	**Line Feeder**	**Transformer Feeder**	**Bus Coupler Feeder**	**Capacitor Feeder**
11.10.1	CB OFF status	CB OFF status	CB OFF status	CB OFF status
11.10.2	CB ON status	CB ON status	CB ON status	CB ON status
11.10.3	86 1/2 Optd	86 1/2 Optd	86 1/2 Optd	86 1/2 Optd
11.10.4	TCS-1 Healthy	TCS-1 Healthy	TCS-1 Healthy	TCS-1 Healthy
11.10.5	TCS-2 Healthy	TCS-2 Healthy	TCS-2 Healthy	TCS-2 Healthy
11.10.6	CB Ready	CB Ready	CB Ready	CB Ready
11.10.7	Bay Ready	Bay Ready	Bay Ready	Bay Ready
11.10.8	L/R SW in Remote	L/R SW in Remote	L/R SW in Remote	L/R SW in Remote
11.10.9	89A open status	89A open status	89A open status	89A open status
11.10.10	89A close status	89A close status	89A close status	89A close status
11.10.11	89B open status	89B open status	89B open status	89B open status
11.10.12	89B close status	89B close status	89B close status	89B close status

11.10.13	89L open status	89T open status	Ethernet SW#1 faulty*	89C open status
11.10.14	89L close status	89T close status	Ethernet Sw#2 faulty*	89C close status
11.10.15	89LE ES open status	TMU/AVR relay faulty	spare	Cap bank Door Open Status*
11.10.16	87L relay faulty	87T relay faulty	67/67N-1 relay faulty	87T relay faulty
11.10.17	67/67N relay faulty	67/67N relay faulty	67/67N-2 relay faulty	67/67N relay faulty
11.10.18	86 1/2 Relay faulty	86 1/2 Relay faulty	86 1/2 Relay faulty	86 1/2 Relay faulty
11.10.19	VT MCB Trip/Off	VT MCB Trip/Off	VT MCB Trip/Off	VT MCB Trip/Off
11.10.20	DC Source 1/2 Fail	DC Source 1/2 Fail	DC Source 1/2 Fail	DC Source 1/2 Fail
11.10.21	DC MCB Ckt 1/2 Trip/Off	DC MCB Ckt 1/2 Trip/Off	DC MCB Ckt 1/2 Trip/Off	DC MCB Ckt 1/2 Trip/Off
11.10.22	AC Supply Fail	AC Supply Fail	AC Supply Fail	AC Supply Fail
11.10.23	Ann.Alarm	Ann.Alarm	Ann.Alarm	Ann.Alarm
11.10.24	Ann.Faulty	Ann.Faulty	Ann.Faulty	Ann.Faulty
11.10.25	Ethernet SW#1 faulty *	Ethernet SW#1 faulty*	spare	Cap Bank trouble alarm
11.10.26	spare	spare	spare	spare
11.10.27	And other additional signals as per purchaser requirements during engineering.			
11.11	**Binary outputs CRP Panel Line, Transformer, Bus coupler, Capacitor**			
Binary outputs	**Line Feeder**	**Transformer Feeder**	**Bus Coupler Feeder**	**Capacitor Feeder**
11.11.1	CB Close Command	CB Close Command	CB_ON Command	CB_ON Command
11.11.2	CB Open Command	CB Open Command	CB_OFF Command	CB_OFF Command
11.11.3	89A Close Command	89A Close Command	89A Close Command	89A Close Command
11.11.4	89A Open Command	89A Open Command	89A Open Command	89A Open Command
11.11.5	89B Close Command	89B Close Command	89B Close Command	89B Close Command
11.11.6	89B Open Command	89B Open Command	89B Open Command	89B Open Command
11.11.7	89L Close Command	89T Close Command	spare	89C Close Command
11.11.8	89L Open Command	89T Open Command	spare	89C Open Command

11.11.9	86 RESET Command	86 RESET Command	86 RESET Command	86 RESET Command
11.11.10	Ann. Acknowledge Command	Ann. Acknowledge Command	Ann. Acknowledge Command	Ann. Acknowledge Command
11.11.11	Ann. RESET Command	Ann. RESET Command	86 RESET Command	86 RESET Command
11.11.12	spare	spare	spare	spare
11.11.13	And other additional signals as per site requirements.			
11.12	Transformer Main Tank, OLTC, Cooler Control cubicle, BC, ACDB, DCDB, NIFPES, etc and other substation equipments signals as per site requirements on case to case basis.			
11.13	GIS SS: Circuit breaker, Disconnector, Earth switch signal shall be directly wired to RTU for OPEN & CLOSE positions. AIS SS: Circuit breaker signals shall be directly wired to RTU for OPEN & CLOSE positions. Disconnector, Earth switch signals shall be wired to RTU from CRP panel with multiplier aux.relays of CRP panels for OPEN & CLOSE positions. And other additional signals as per purchaser requirements during engineering.			

11.14	**Transformer Monitoring Cum AVR Relay**	
11.14.1	Functions	As per annexure – A.
11.14.2	Requirement	To be provided in Transformer CRP.
11.14.3	**General Conditions**	
11.14.4	The above list all signal, functions of numerical relays is indicative only and number of signals should not be limited to this. Additional signals should be taken during review of actual drawings	

12.0 AUXILIARY RELAYS

12.1	**General Features of Auxiliary Relays**	
12.1.1	Power supply	48 ~ 250V DC/AC universal power supply module as per purchaser requirement.
12.1.2	Voltage ratings	All relays shall be suitable for continuous operations at min.20% over voltage & min.30% under voltage levels as per above rated voltage.
12.1.3	Temperature	-20ºC to +70ºC with humidity working parameters.
12.1.4	Type	Miniature / Numeric / Static types
12.1.5	Aux. Relay contacts make	All auxiliary relays contacts with Nickel cadmium material is preferred. If other material like Silver-Copper-Nickel (Ag-Cu-Ni), etc. used then necessary boot insulation must be provided in order to avoid false operation of contacts. (Engg stage shall

		be decided)	
12.1.6	No ADD-ON block	No ADD-ON Block should be used to meet additional contacts.	
12.1.7	Auxiliary relay details	Aux.Relays	Self RESET aux.relays with Indication LED/Flag as per purchaser requirements.
		Master Trip relay	Both Electrical RESET and Hand RESET types.
		Bistable Relays	For CB contact multiplication & as per purchaser requirements.
		Time	Operating time ≤ 15ms.
		Resistor	The aux.relay must be provided without external resistor only.
		Spare	2NO+2NC spare contacts wired upto T.Bs for each aux.relays.
12.1.8	Insulation resistance	Insulation resistance of min.100MΩ between output contact and contactor for 500V dc IR test for 60sec.	
12.1.9	Dielectric	Dielectric strength of relay 500V AC RMS for 60sec between contacts & coil and body shall confirm IEC stds.	
12.1.10	Signal Integration	All signal integration shall only be through NO, NC contact as per site & purchaser requirements.	
12.2	**Auxiliary relays – Panel wise requirement**		
12.2.1	Master Trip relay	To be provided in all panels.	
12.2.2	DC Supervision relay source #1		
12.2.3	DC Supervision relay source #2		
12.2.4	DC fail relay		
12.2.5	AC fail relay		
12.2.6	Trip circuit supervision relay	To be provided in all panels for supervision of two trip coils.	
12.2.7	Aux.relay	All aux.relays must be provided with actual NO,NC contacts only and without ADD ON BLOCK contacts.	
12.2.8	Aux.relay characteristics	The aux.relays must be provided without external resistor for supervision, contact multiplication, lockout relays, trip circuit supervision, etc.	
12.2.9	VT selection relays	To be provided in all panels as per BSES requirement.	
12.2.10	Sync check relay	This sync check relay shall be provided in addition to sync function at to Bay control & protection relay (BCPU). If Main protections relay it's consist of voltage analog module and serve sync check function, then separate sync relay shall be avoided.	
12.3	**Voltage Monitor Relay (VMR)**		

12.3.1	Aux.Volt& Measurement inputs	Aux.Voltage: 24 ~ 240V dc, UV, OV Measuring input: 0 -600V AC/DC, 1 C/O, RS485/RTU, LED Display
12.3.2	Voltage Monitor Relay (VMR)	DC (+Ve) or (-Ve) voltage shall be monitored for each CRP panel DC distribution ckts and report in case of UV/OV values exceeds set limits.
12.3.3	Reporting signal	The relay shall be provided with 2NO, 2NC along with RS485 communication for reporting to RTU modules (Analog/Digital).
12.4	**Earth Leakage Relay(ELR)**	
12.4.1	Aux.Volt& Measurement inputs	Aux.Voltage: 20 ~ 230V AC/DC, UV, OV Measuring input: 48Vdc, 110Vdc, 220Vdc Contacts: 2NO+2NC, Flush current set: 5~40mA, Time : 1~15sec.
12.4.2	Earth Leakage Relay(ELR)	The ELR leakage current range of upto ≥50mA. (min. Earth leakage 5mA~50mA) and report in case of Earth leakage current exceeds set limits. The DC leakage tested by +Ve or –Ve to Earth with set time limit of operation for alarm/trip as per requirements.
12.5	Transformer Aux.Relays	Auxiliary relays with indicating flags/LEDs (contactors not accepted) should be provided in transformer panel for the following trip and alarm commands 1. Buchholz trip 2. OSR Trip 3. PRV trip 4. WTI HV Trip 5. WTI LV Trip 6. OTI Trip 7. MOG Alarm 8. SPR Trip 9. NIFPS Trip 10. Buchholz Alarm 11. OTI Alarm 12. WTI HV Alarm 13. WTI LV Alarm 14. OLTC PRV Trip 15. OLTC OSR Trip 16. OLTC MOG Alarm As per TRF.Signals / Site requirements aux.relay 03 nos spare need to be provided by vendor.
12.6	Temperature / Tap position indicator	OTI, WTI(HV/LV), TPI indicator shall be provided in Transformer Feeder CRP panels.
12.7	Transformer Aux.Relays spare contacts	All Transformer trouble relays shall be provided additionally with 2 NO and 2 NC contact as spare. Also 3 nos aux.relays shall be wired as spare in panel for future use.
12.8	Operational Data	Bidder shall provide the reference list of the type of relays offered.
12.9	Push button	Push button with suitable rating must be provided for RESET necessary equipments like Annunicator (Accept/RESET buttons), Master trip & wherever needs as per BSES requirements.
12.10	**CB SF6 Gas**	**CB SF6 GAS Low/Lock Aux.relays requirements**
12.10.1	SF6 Low & SF6	To be provided in all 66/33kV control and relay panels.

	Lockout relay	The SF6 Lock out aux.relays contact shall make/break the negative side of the respective circuit breaker close/trip coils for avoiding unwanted commands from SCADA/Local operations team.

13.0 SYNCH CHECK PHILOSPHY

Sl no	Heading	Function description
13.1	Dead Bus – Live Line	(a) Application - Required for Charging of Bus from Line Supply (b) Logic - Sync check relay installed on line panel will check the line and bus voltage and derive that the line is live and bus is in dead condition i.e bus has to be charged by the line breaker. Hence Sync check relay will allow the line breaker to close in this condition.
13.2	Dead Line – Live Bus	(a) Application - Required for Charging of Line from Bus Supply. (b) Logic - Sync check relay installed on line panel will check line and bus voltage and derive that the line is dead and bus is in live condition i.e line has to charged from bus. Hence Sync check relay will allow the line breaker to close in this condition.
13.3	Live Bus – Live Line	(a) Application - Required for paralleling of bus and line supply. (b) Logic - Sync check relay installed on line panel will compare magnitude and phase sequence of line and bus voltages. If the variations are within the range set in the relay, sync check relay will allow the closing of line breaker.
13.4	Live Bus – Dead Bus	(a) Application – Required for charging of dead bus through another live bus. (b) Logic – Sync check relay installed on bus coupler/bus section panel will check voltage of both buses and derive that one bus is dead and other bus is live i.e dead bus is being charged from live bus. Hence Sync check relay will allow the bus coupler/bus section breaker to close in this condition.
13.5	Live Bus – Live Bus	(a) Application – Required for paralleling of two buses/bus sections. (b) Logic – Sync check relay installed on bus coupler/bus section panel will compare the magnitude and phase sequence of voltage of both buses (and bus sections). If the variations are within the range set in the relay, sync check relay will allow the bus coupler/bus section breaker to close.

14.0 MANAGED ETHERNET SWITCH

Sl no	Heading	Function description
14.1	**Ethernet Switch**	
14.1.1	Numbers	Two or more as per site requirements with 20% redundancy of switch.
14.1.2	FO Port (Downlink)	Minimum 24 nos i. FO:20 nos LC,1310nm, multimode, 100 Mbit/s. ii. RJ45:4nos(CAT VI usable) Ethernet port copper, 1310nm,100 Mbits/s.
14.1.3	FO Port (Uplink)	SFP type : Minimum 2 Nos, 1000 Mbits/s.
14.1.4	RJ 45 Port (Uplink)	SFP type : Minimum 2 Nos, 1000 Mbits/s.
14.1.5	Network Protocol	PRP, HSR compatibility.
14.1.6	Coating	Conformal type.
14.1.7	Power Supply	48-240V DC, 180 ~ 260 V AC, dual source power. Universal power supply module with less power consumptions.
14.1.8	ETH Grade	Industrial Layer 2 type.
14.1.9	ETH Module	Ethernet Switch shall be Universal Modular type
14.1.10	Certification	KEMA,CE & FCC & IEC 61850 compliance.
14.1.11	Operating Temperature	-40ºC to +70ºC.
14.1.12	Storage Temperature	-40ºC to +85ºC.
14.1.13	Relative Humidity	5 to 95%
14.1.14	Placement type	Protection Panel / RTU panel Power supply – Modular Type Ethernet switch – Modular Type
14.1.15	Blinking LED Indicators	On each FO/RJ45 ports.
14.1.16	Maintenance /console Part	Required.
14.1.17	Latency	Less than or equal to 10 ms.
14.1.18	Fiber Optic Compatibility	Multimode, 1310 nm as per SCADA requirements.
14.1.19	Fiber Optics/ RJ45 comm. Cables/cords	As per scheme requirements.
14.1.20	Connection: PRP type	Ref: ANNEXURE – D SCADA Architecture SLD as per RTU/SCADA specifications.
14.1.21	Cyber security	Refer cyber security as specified in CRP specifications
14.1.22	Wavelength	1310 nm as per SCADA requirements.
14.1.23	Ethernet RJ45 Cable Type	CAT VI.

14.1.24	Associated Connectors and Accessories	As per customer requirements and shall be verified during engineering stage.

15.0 ANNUNCIATION

Sl no	Heading	Function description
15.1	Type	Static type/Numerical type along with alarm. Annunciations shall be repetitive type and shall be capable of registering the fleeting signal. Fascia test facility should also be provided.
15.2	Power	Universal power supply 24 ~ 240V DC/AC.
15.3	Ann. push button	Potential isolation of all electrical circuits, with Indication lamps TEST, ACKNOWLEDGE, RESET buttons.
15.4	Temperature	-20°C to +70°C with humidity 75% relative humidity.
15.5	Power consumption	≤ 2.0W.
15.6	Mounting	Flush mounted.
15.7	Electromagnetic compatibility	Noise immunity, Noise irradiation as per IS/IEC std.
15.8	Wiring	Announciator must have provision for inversion of Input signal High/Low as per control/protection requirements without affecting external wiring connections.
15.9	Fascia Window	Minimum 24 windows , 30x30mm, Size Type: 3D, Trip Facia:RED, NonTrip Facia:Yellow, Factory set Seq.Manual Reset"M", AC&DC Fail in Last two windows with RS485/TCP IP Modbus communication.

Reference signal list:- Finalized during detailed engineering.

Line	Transformer	Bus Coupler	Capacitor
M1FP Fail	M1PTP Fail	M1BCP Fail	M1CBP Fail
M1FP Trip	M1PTP Trip	M1BCP Trip	M1CBP Trip
M2FP Fail	M2PTP Fail	M2BCP Fail	M2CBP Fail
M2FP Trip	M2PTP Trip	M2BCP Trip	M2CBP Trip
86.1& 86.2 Optd	86.1& 86.2 Optd	86.1& 86.2 Optd	86.1& 86.2 Optd
TCS 1&2 Faulty	TCS 1&2 Faulty	TCS 1&2 Faulty	TCS 1&2 Faulty
CB Trouble alarm	CB Trouble alarm	CB Trouble alarm	CB Trouble alarm
VT MCB Off/Trip/VT Fail	VT MCB Off/Trip/VT Fail	VT MCB Off/Trip/VT Fail	VT MCB Off/Trip/VT Fail
VT Fuse Fail	VT Fuse Fail	VT Fuse Fail	VT Fuse Fail
87L Comm. Channel # 1 Faulty	OLTC Trouble alarm	Ethernet SW#1 faulty *	Cap.Bank alarm
87L Comm. Channel # 2 Faulty	OLTC DM drive Trip	Ethernet SW#2 faulty *	spare

	86.1, 86.2 Fail	86.1, 86.2 Fail	86.1, 86.2 Fail	86.1, 86.2 Fail
	spare	spare	spare	spare
	UV/OV/BRC Alarm	OTI Alarm	LV REF Trip	Ethernet SW#1 faulty *
	Ethernet SW#1 faulty *	OTI Trip	spare	spare
	DC ckt-1 MCB off/trip	WTI HV/LV Alarm	DC ckt-1 MCB off/trip	DC ckt-1 MCB off/trip
	DC ckt-2 Fail MCB off/trip	WTI HV/LV Trip	DC ckt-2 Fail MCB off/trip	DC ckt-2 Fail MCB off/trip
	DC supply fail	TRF MOG Alarm	DC supply fail	DC supply fail
	AC supply fail	OLTC MOG Alarm	AC supply fail	AC supply fail
	spare	Buchholz Alarm	spare	spare
	spare	Buchholz Trip	spare	spare
	spare	TRF PRV Trip	spare	spare
	spare	TRF OSR / SPR / RPRR Trip	spare	spare
	spare	OLTC PRV Trip	spare	spare
	NA	OLTC OSR / SPR / RPRR Trip	NA	NA
	NA	NIFPS Optd	NA	NA
	NA	TMU/AVR relay Fail	NA	NA
	NA	TMU/AVR relay Trip	NA	NA
	NA	DC ckt-1 MCB off/trip	NA	NA
	NA	DC ckt-2 Fail MCB off/trip	NA	NA
	NA	DC supply fail	NA	NA
	NA	AC supply fail	NA	NA
	Other Ann. Window's spare shall be wired upto terminals.			

15.10	Others	Hooter & Bell shall be provided as per IS/IEC std. Provision for hooter out of service shall needs to be provided.
15.11	Potential Free contacts	To be provided for event logger.
15.12	Overall Dimension of Group	To be Provided by Vendor.
15.13	Operation of windows	Sequence of operation of the annunciator shall be as follows.

		Alarm Condition	Fault Contact	Visual Annunciation	Audible Annunciation
	1	Normal	OPEN	OFF	OFF

	2	Abnormal	CLOSE	FLASHING	ON
	3	Accept	CLOSE	STEADY ON	OFF
	4	Return to normal	OPEN	STEADY ON	OFF
	5	Reset	OPEN	OFF	OFF
	6	Reset before return to normal	CLOSE	FLASHING	ON

16.0 INSTRUMENTS

Sl no.	Heading	Function Description
16.1	**MULTIFUNCTION METER (MFM)**	
16.2	Power measurements	To extend the current / voltage / active and reactive power / power factor, etc to RTU, MFM to be installed in CRP/SWGR panels individually for each feeder/ breaker and should be integrated with RTU. Ref Annexure A – SCADA Signal list for MFM measurement signal list in SCADA specifications.
16.3	Auxiliary Supply	Universal power supply 24 ~ 240V DC/AC as per site system voltage conditions.
16.4	Communication	The output of these meters (in groups of 5) connections should be made using twisted pair screened cable (Typically 22 Gauge Belden 8761 or equivalent) & two wires (A and B) connections are daisy chained together and integrated with RTUs.
16.5	Modbus Protocol.	RS485/TCP IP rear port suitable for integration on Modbus Protocol.
16.6	Configuration	All hardware's or protocol converters for having MODBUS protocol output, CT & PT wirings to MFMs as per CRP scheme drawings and it's configuration should be in vendor's scope.
16.7	Surge protection	For the protection of MFMs and RTU cards against surges and electrical leakages, it is necessary to install Surge Protection Devices in between RTU and MFM serial loops. The typical diagram for this connection is mentioned in the SYSTEM ARCHITECHTURE DIAGRAM.
16.8	SCADA Interfacing	RS485/TCP IP rear port suitable for integration on Modbus Protocol. All measurement signal integration of MFM meter shall be compatible according to RTU/SCADA requirements.
16.9	Size	96x96 mm.
16.10	Panels where to be provided	All panels.
16.11	Accuracy Class	0.2S.

16.12	Energy meter provision	Energy meter is not in supplier's scope. Only space and CT/VT wiring is to be provided in all panels except bus coupler and bus VT. Space shall be 350 mm (H) x200 mm (W) for flush mounting meter with holes for meter connection, wiring which shall be decided during Engineering.
16.13	**MULTI-FUNCTION METER MEASUREMENT PARAMETERS**	
16.13.1	Parameter #1	Phase Voltages (L1-N, L2-N, L3-N)
16.13.2	Parameter #2	Line Voltages (L1-L2, L2-L3, L1-L3)
16.13.3	Parameter #3	Line Currents (IL1, IL2, IL3)
16.13.4	Parameter #4	Active Power
16.13.5	Parameter #5	Reactive Power
16.13.6	Parameter #6	Maximum Demand (KW)
16.13.7	Parameter #7	Frequency
16.13.8	Parameter #8	Power Factor
16.13.9	Parameter #9	Active Energy
16.13.10	Parameter #10	Reactive Energy
16.13.11	Parameter #11	THD mean current
16.13.12	Parameter #12	THD mean voltage
16.13.13	Parameter #13	Neutral current
16.13.14	Parameter #14	Phase Angles
16.13.15	Other	Other parameters as per BSES requirements
16.14	Type/Model/ VA Burden	To be Provided by Vendor & approved by purchaser.
16.15	Multifunction Meter	Digital type with programmable ratio.
16.16	**Approved Make**	**Rishabh [RISH 3440], Schneider [Conserv EM 4000NG]**

17.0 INDICATIONS

Sl no	Heading	Function description
17.1	Indicating Lamps	Flush mounted Clustered LED type with rear terminal connections. Lamp Cover to be screwed type an moulded from heat resistant material.
17.2	Breaker On	Red
17.3	Breaker Off	Green
17.4	Isolator Close	Red
17.5	Isolator Open	Green
17.6	Spring Charged	Blue

17.7	CB Ready	Amber
17.8	DC control supply healthy	Amber
17.9	DC Faulty	Red
17.10	AC Faulty	Amber
17.11	Heater circuit healthy	White
17.12	Trip circuit healthy	Yellow
17.13	VT supply	R, Y, B
17.14	Voltage	48-240 Vdc/Vac universal power supply module.
17.15	Rating	To be Provided by Vendor.
17.16	Wattage	To be Provided by Vendor.
17.17	Series Resistance	To be Provided by Vendor.
17.18	Size of lens	To be Provided by Vendor.
17.19	Make	To be Provided by Vendor.
17.20	Type	To be Provided by Vendor.
17.21	Semaphores	Binay or DAV or equivalent. To be Provided by Vendor.
17.22	Make	To be Provided by Vendor.
17.23	Type	To be Provided by Vendor.
17.24	Diameter of the Disc	To be Provided by Vendor.
17.25	Operating voltage	48~250 VDC as per purchaser requirements.
17.26	Burden (Watt DC)	To be Provided by Vendor.
17.27	Whether latch in type or supply Failure type	To be Provided by Vendor.
17.28	Discrepancy Switch	To be Provided by Vendor.

18.0 SELECTOR SWITCHES AND PUSH BUTTONS

Sl no	Heading	Function description
18.1	Switches	Flush Mounted with shrouded terminals.
18.2	TNC Switch	Lockable Pistol Grip type with spring return to normal position.
18.3	Local/Remote [SCADA] selector switch	2 pole. Different colour switch for Breaker / Isolator or Disconnector control switches preferred.
18.4	Rotary On/Off Switches	For CB Test-Service Mode/ Heater ckt / Illumination ckt/ Interlock BY PASS ckt, etc as per site requirements.

18.5	DC Selector switch	DC-1 + OFF + DC-2 as 3 pole selection switch & as per site requirements.
18.6	Ammeter selector switch	Ammeter selection switches shall have make-before-break type contacts so as to prevent open circuiting of CT secondary.
18.7	Voltage selector switches	Voltmeter transfer switches shall be suitable for reading Phase-Neutral, Phase-Phase voltages.
18.8	Rating of switches	16 A.
18.9	Push buttons	Flush Mounted with shrouded terminals.
18.10	Accept Push Button	Flush Mounted Black Color- Trip alarm/DC fail alarm.
18.11	Reset Push Button	Flush Mounted Yellow Color- Trip alarm/DC fail alarm.
18.12	Test Push Button	Flush Mounted Blue Color.
18.13	Rating of Push button	10A.

19.0 CRP PANEL ACCESSORIES

Sl no	Heading	Function description
19.1	Space heaters	Thermostat controlled with switch for isolation & Ind.lamp. Space heaters shall be covered with mesh for safety purpose.
19.2	Voltage	240 V AC.
19.3	Wattage	To be provided by Vendor.
19.4	Thermostat Range / Hygrostat Range	To be provided by Vendor.
19.5	Provided with Individual fuse unit	To be provided by Vendor.
19.6	Power Socket and switch	240V, 5/15A universal type socket to be provided in each panel with on-off switch.
19.7	Test point	The CRP panel front side 65Wx50Hmm size gap cover with suitable dummy plate for accessing must be provided. Additional Power socket (01no) shall be placed rear side accessible. The protection relays test leads, communication cables, power cables of laptop shall be moved freely.
19.8	MCBs and Fuses	Provision for receiving, distribution, isolation and fusing of DC and AC supplies to various control circuits should be made using MCBs, RCDs, RCCBs, ELM and HRC Fuses of appropriate ratings as per purchaser requirements.
19.9	Panel illumination	240V AC illumination lamp controlled by panel door switch to be provided in each panel.

20.0 APPROVED MAKES OF COMPONENTS

Sl no	Heading	Make & Model, Hardware details
20.1	Intelligent Electronic Devices (IED) / Numerical Relays	Relay Model no/Order code/MLFB of latest software & firmware functions must be provided. **(Phased-out relays/Obsolete relays/Relay going to obsolete shall not be acceptable).** Ref: ANNEXURE – D
20.2	**Numerical relays / IEDs makes as follows:**	
20.2.1	GE	P54x/P64x/ Multilin 5th Gen/Agile Series and above
20.2.2	HITACHI ENERGY	REx670 Series and above
20.2.3	SCHNEIDER ELECTRIC	P54x/P64x/ P5 Series and above
20.2.4	SIEMENS	Siprotec 5 Series (modular type) and above
20.2.5	**Managed Ethernet Switch**	Ruggedcom / Hirschman/Moxa
20.3	Auxiliary relay	ABB/ Omron / Schneider / Hitachi Energy/Siemens/GE
20.4	Discrepancy Switch	Multimode
20.5	Meters	AE
20.6	Tri-Vector Meter	Secure
20.7	Multi Function Meter	Rishabh (Rish Delta Energy)
20.8	OTI, WTI, TPI meter	Make to be provided by vendor for prior approvals.
20.9	LIU	Make to be provided by vendor for prior approvals.
20.10	MCBs	Siemens/Schneider/Legrand/ABB.
20.11	Control switches	Switron/Kaycee
20.12	Annunciator	Minilec/Alan.
20.13	Test terminal block	IMP/DAV.
20.14	Terminal blocks	Elmex/Connectwell.
20.15	CRP panel wiring	Polycab/KEI/Finolex/Havells
20.16	Lugs	Dowells/Jaison
20.17	Indication lamps, push Buttons	Siemens/Schneider/Binay.
20.18	CFL	Bajaj / Phillips / Havells
20.19	Semaphore indication	Binay or equivalent to be provided by vendor for approval.
20.20	Managed Ethernet Switch	Ruggedcom / Hirschman/
20.21	Sync check relay	To be provided by vendor for approval.
20.22	DC Voltage Monitor Relay (VMR)	Phoenix/ Voltech.
20.23	DC Earth leakage Monitor (ELM)	Phoenix/ Voltech.
20.24	Stabilizing Resistor	Pentagon or equivalent

20.25	Metrosil	M&I/Siemens or equivalent
20.26	Other devices	if any missed out device needs to meet site requirements must be as per BSES recommendations only.

21.0 DEVIATIONS

Deviation from this specification shall be stated in writing with the tender by reference to the specification clause/ GTP/ Drawing and description of alternative offer. In absence of such a statement, it shall be assumed by the buyer that the seller complies fully with this specification.

22.0 DRAWINGS AND DATA SUBMISSION MATRIX

- ❖ Document checklist for each stage is given in table below. (Refer equipment specification for details)
- ❖ Document check sheet compliance shall be the first sheet for each submission stage i.e. Technical bid, Drawing Approval, Pre Dispatch, Pre closure.
- ❖ No submission is acceptable without check list compliance.
- ❖ Deficient/ improper document/ drawing submission shall be liable for rejection.
- ❖ Order of documents shall be strictly as per the check list with in Soft copy with separate folder in proper nomenclature.
- ➢ Any drawing not included in the below table but necessary for detailed engineering shall be deemed to be included in bidder's scope.

Sl.no	Head	Bid	Drawing Approval	Pre Dispatch	Pre Closure
22.1	Contact Person Name, Email ID and Mobile Number	Required			
22.2	Consolidated Deviation Sheet	Required	Required		
22.3	GTP	Required	Required		
22.4	Type Test as per IS/IEC	Required			
22.5	Manufacturer's quality assurance plan and certification for quality standards		Required		
22.6	Sizing Calculation of Associated Equipment		Required		
22.7	Recommended Spares Apart from spares stated in Spec(for 10 years of operation)		Required		
22.8	Schematic		Required		
22.9	CRP Individual Feeders		Required		
22.10	General Arrangement	Required	Required		
22.11	Sectional Layout		Required		
22.12	Door Layout		Required		
22.13	Panel wise BOQ		Required		
22.14	Index Sheet		Required		
22.15	Symbols		Required		

Sl.no	Head	Bid	Drawing Approval	Pre Dispatch	Pre Closure
22.16	SLD	Required	Required		
22.17	Trip Logic/Matrix		Required		
22.18	AC Distribution Circuit		Required		
22.19	DC Distribution Circuit		Required		
22.20	CT Distribution Circuit		Required		
22.21	VT Distribution Circuit		Required		
22.22	Voltage Selection Circuit		Required		
22.23	Metering Circuit		Required		
22.24	Indication Circuit		Required		
22.25	Isolator Control Circuit		Required		
22.26	Protection Circuit		Required		
22.27	Relay Circuit with BI and BOs		Required		
22.28	BI and BO Sheet of each relay		Required		
22.29	Schematic Circuit diagram and Scheme of Each type of Panel		Required		
22.30	Logic Operation Diagram for CB, ISO, ES, SYNC ckts.		Required		
22.31	Communication Architecture		Required		
22.32	Transformer Monitoring Relay Circuit in case of Transformer Panel		Required		
22.33	CB Closing interlock circuit		Required		
22.34	Tripping relay Circuit		Required		
22.35	CB status &CB trouble multiplication aux.relay circuit		Required		
22.36	Isolator , ES and transformer trouble contact multiplication circuit		Required		
22.37	Annunciation circuit		Required		
22.38	Synch Logic Diagram		Required		
22.39	All Relay SCADA Communication Diagram with FO patch chord lengths		Required		
22.40	Relay Line – Line Communication Architecture in case of Line Differential panel with LIU connection setup		Required		
22.41	Relay's cortec codes with terminals reference circuits		Required		
22.42	Interpanel wiring circuits				
22.43	TB Reference page		Required		
22.44	RTU/SCADA/LCC circuits		Required		
22.45	QAP		Required		
22.46	Inspection Reports			Required	

Sl.no	Head	Bid	Drawing Approval	Pre Dispatch	Pre Closure
22.47	As manufacturing Drawings A3 size Hard copy with each panel			Required	
22.48	Operation and Maintenance Manual			Required	Required
22.49	Trouble shooting manual			Required	Required
22.50	As built Drawings A3 size Hard copy with each panel after commissioning				Required
22.51	Test Report				Required
22.52	Soft Copy				
22.53	In Pen drive/mail/CD/DVD	Required	Required	Required	Required
22.54	Annexure				
22.55	Annexure – A (TMU function)	TRANSFORMER MONITORING UNIT CUM AVR RELAY			
22.56	Annexure – B	GUARANTEED TECHNICAL PARTICULARS			
22.57	Annexure – C	SPARES REQUIREMENT			
22.58	Annexure – D	PROTECTION RELAYS MAKE & MODEL			
22.59	Annexure – E	SINGLE LINE DIAGRAM			

23.0 QUALITY ASSURANCE, INSPECTION & TESTING

Sl no	Heading	Function description
23.1	Vendor quality plan	To be submitted for purchaser approval.
23.2	Type tests	Product must be type tested as per Indian Standards or IEC. Vendor shall be submitting & get approval from BSES team for inspection relevant documents.
23.3	Type test report validity	Last five years from the date of bid submission.
23.4	Acceptance and Routine tests	The documents furnished for details of method of inspection, checking & acceptance standards and results shall be approved by Inspection team of BSES. Any hold points raised, then the supplier shall comply with the remarks made by BSES representative on such reviews with regards to further testing, rectification or rejection, etc.
23.5	Notice to Purchaser for conducting tests	Five weeks in advance.
23.6	Inspection	The supplier to proceed with the work past a hold point only after clearance by purchaser (if any) or a witness waiver letter from BSES.

23.7	Inspection visit	Successful bidder has to bear all factory inspection/testing expenses of Engineer (3 nos) including To & Fro Flight travels, foods, accommodation, lodging & boarding – Minimum 4 Star rated Logde/Hotel (As per Govt.approved list).
23.8	Test reports of acceptance and routine test before dispatch	The vendor supply QR code in two places of CRP panel for SCAN and collecting reports i. Final As Built Drawings(ABD) of each panel. ii. Acceptance & Routine Test reports iii. Quality & Type Test reports iv. Manuals of each device. v. Inspection reports & FAT reports. vi. Numerical relays cortec codes. vii. Sizing calculation of associated equipments. viii. Compliance sheets of each scheme drawing. ix. Material Dispatch clearance certificate (MDCC)
23.9	Deliverable	Hard Copies: ➢ 2 sets : A3 size – Approved Drawing of each panel Protection Dept. ➢ 2 sets : A3 size – As Manufactured Drawings(AMD) after approved drawing of each panel for site execution including inspection comments & correction updated shall be dispatch along with panel. ➢ Final Site review & comments after Site commissioning Red Markup Drawing (RMD) which shall be corrected on supplied drawings by Vendor. ➢ 4 sets : A3 size – Final As Built Drawing(ABD) – with AsBuiltStamp For Projects, Protection Dept, O&M Dept, SCADA Dept,.(After commissioning) ➢ 1 sets : A4 size – CRP Maintenance Manual, Numerical relays each type/model, Aux.relays, Ethernet switches, Meters, Metrosil, Calculation of sizing of various equipments, DC/AC sizing calculations, etc & other devices fixed in panels as per IS/IEC std. Soft Copies: ➢ 2 CD/DVD copy: Final As Built Drawings (ABD) including Autocad / Enggcad files, pdf files. Maintenance manuals in .pdf files. (bidder shall discuss with BSES for actual format of submission of documents). ➢ Numerical relays original software's (latest version)

24.0 PACKING

Sl no	Heading	Function description
24.1	Packing Protection	Against corrosion, dampness, heavy rains, breakage and vibration. During transportation/ transit and storage, panels may be subjected to outdoor conditions. Hence, packing of each panel shall be weatherproof.
24.2	Packing for accessories and spares	Robust wooden non returnable packing case with all the above protection & identification Label.
24.3	Packing Identification Label to be provided on each packing case with the following details.	
24.4	Purchaser's name.	
24.5	PO number (along with SAP item code, if any) & date.	
24.6	Equipment Tag no. (if any)	
24.7	Destination.	
24.8	Project Details.	
24.9	Panel serial number ,Equipment Identification No, Panel Drawing details	
24.10	Manufacturer / Supplier's name.	
24.11	Address of Manufacturer / Supplier / it's agent.	
24.12	Description and Quantity.	
24.13	Country of origin.	
24.14	Month & year of Manufacturing.	
24.15	Case measurements.	
24.16	Gross and net weights in kilograms.	
24.17	All necessary slinging and stacking instructions.	

25.0 SHIPPING

Sl no	Heading	Function description
25.1	**Shipping**	The bidder shall ascertain at an early date and definitely before the commencement of manufacture, any transport limitations such as weights, dimensions, road culverts, Overhead lines, free access etc. from the Manufacturing plant to the project site. Bidder shall furnish the confirmation that the proposed. Packages can be safely transported, as normal or oversize packages, up to the site. Any modifications required in the infrastructure and cost thereof in this connection shall be brought to the notice of the Purchaser.
		On completion of manufacturing the items can be dispatched only after issue of shipping release by the purchaser.
		The seller shall be responsible for all transit damages due to improper packing.

26.0 HANDLING AND STORAGE

Sl no	Heading	Function description
26.1	Handling and Storage	Manufacturer instruction shall be followed. Detail handling & storage instruction sheet / manual needs to be furnished before commencement of supply.

27.0 ABBREVATIONS

Sl No.	Name	Description
27.1	AC	Alternating Current
27.2	DC	Direct Current
27.3	CT	Current Transformer
27.4	VT or PT	Voltage Transformer or Potential Transformer
27.5	SLD	Single Line Diagram
27.6	ICT	Interposing Current Transformer
27.7	CRP	Control & Relay Panel
27.8	BC	Bus Coupler
27.9	Cap.Bank	Capacitor Bank

27.10	LCC	Local Control Cubicle
27.11	RTU	Remote Terminal Unit
27.12	SCADA	Supervisory Control And Data Acquisition
27.13	AIS	Air Insulated Substation
27.14	GIS	Gas Insulated Substation
27.15	SWGR	Switch gear
27.16	OLTC	On Load Tap Changer
27.17	IED	Intelligent Electronic Device
27.18	HMI	Human Machine Interface
27.19	LCD	Liquid Crystal Display
27.20	LED	Light Emitting Diode
27.21	CB	Circuit Breaker
27.22	TNC	Trip Neutral Close
27.23	ES	Earth Switch
27.24	MCB	Miniature Circuit Breaker
27.25	PT100	Platinum Temperature resistance sensor “100” denotes its nominal resistance at “0ºC”.
27.26	PC	Personal Computer
27.27	DM	Derive Mechanism
27.28	Sync	Synchronization
27.29	Dir.OC	Directional Over Current
27.30	Dir.EF	Directional Earth Fault
27.31	Ins.OC	Instantaneous Over Current
27.32	Ins.EF	Instantaneous Earth Fault
27.33	TOC	Time delayed Over Current
27.34	TEF	Time delayed Earth Fault
27.35	SOTF	Switch On To Fault
27.36	REF	Restricted Earth Fault
27.37	BRC	Broken Conductor
27.38	CTS	Current Transformer Supervision
27.39	LBB/BFR	Local Breaker Backup or Breaker Failure
27.40	VOC	Voltage depended over current
27.41	UF	Under Frequency
27.42	OF	Over Frequency
27.43	df/dt	Rate of Change of Frequency
27.44	OV	Over Voltage
27.45	UV	Under Voltage
27.46	VT Fail	Voltage Transformer Fail

27.47	VMR	Voltage Monitoring Relay
27.48	Sync	Synchronization function
27.49	PSB	Power Swing Block
27.50	M1FP	Main-1 Feeder Line Differential Protection
27.51	M2FP	Main-2 Feeder Protection Bay Control & Backup Protection
27.52	M1PTP	Main-1 Power Transformer Differential Protection
27.53	M2PTP	Main-2 Power Transformer Bay Control & Backup Protection
27.54	M1BCP	Main-1 Bus Coupler Fuse fail Protection
27.55	M2BCP	Main-2 Bus Coupler Bay Control & Backup Protection
27.56	M1CBP	Main-1 Capacitor Bank Protection
27.57	M2CBP	Main-2 Capacitor Bank Bay Control & Backup Protection
27.58	AVR	Automatic Voltage Regulator
27.59	TMU	Transformer Monitoring Unit
27.60	TCIV	Transformer Conservator Isolation Valve
27.61	MCB	Miniature Circuit Breaker
27.62	ELR	Earth Leakage Relay
27.63	AI	Analog Input
27.64	BI	Binary Input
27.65	BO	Binary Output
27.66	GPS	Global Positioning System
27.67	IRIG – B	Inter Range Instrumentation Group – B
27.68	USB	Universal Serial Bus
27.69	CAT-VI	Category – 6 [Standardized Twisted Pair cable]
27.70	RS485	Recommended Standard - 485
27.71	PLC	Programmable Logic Controller
27.72	FRTU	Feeder Remote Terminal Unit
27.73	OFC/FOC	Optical Fiber cable / Fiber Optic Cable
27.74	FO	Fiber Optic
27.75	RJ	Registered Jack
27.76	LC	Lucent Connector
27.77	SC	Standard Connector
27.78	ST	Standard Connector with Spring loaded
27.79	ST	Standard Connector with Push In & Twist
27.80	SFP	Small Form-factor Pluggable
27.81	RSTP	Rapid Spanning Tree Protocol
27.82	HSR	High-availability Seamless Redundancy
27.83	PRP	Parallel Redundancy Protocol
27.84	STP	Shielded Twisted Pair

27.85	FTP	Foil Twisted Pair
27.86	NO	Normally Open
27.87	NC	Normally Close
27.88	L/R	Local / Remote
27.89	O/L	Over Load
27.90	QAP	Quality Assurance Plan
27.91	GTP	General Technical Particular
27.92	SO_2	Sulfur Dioxide
27.93	H_2S	Hydrogen Sulfide

1.0 ANNEXURE – A – TRANSFORMER MONITORING UNIT CUM AVR RELAY

Sl no	Heading	Function description
	General features : TMU/AVR Relay Unit	
1.1	Technology and Functionality	Microprocessor based with provision for multifunction control and monitoring.
1.2	Mounting	Rack Mounting.
1.3	Architecture	Hardware and software architecture shall be modular and disconnectable to adapt the control unit to the required level of complexity as per the application.
1.4	Programming and configuration	AVR shall utilize a user friendly setting and operating multi-lingual software in windows environment with menus and icons for fast access to the data required.
1.5	Human Machine Interface	HMI with an alphanumeric key pad and graphical LCD display with backlight indicating measurement values and operating messages. Capability to access and change all settings and parameters.
1.6	PC Interface port	Front port (preferably serial) for configuration using PC. Software and communication cord, required for programming of offered protection relays using PC, shall be mentioned separately in the bid.
1.7	SCADA Interface port	Communication port: 2xLC duplex FO/2xRJ45 copper – SCADA. (shall be decided during detailed engineering)
1.8	Communication protocol	Relays shall be compatible to transfer all AI, BI, BO, Event, DR, etc. for interfacing with SCADA on IEC61850, IEC103 (Data Type-9), IEC104, etc. protocols as per SCADA requirements.
1.9	Self diagnosis	Relay shall be able to detect internal failures and same shall be transmitted to SCADA as a soft signal. A watchdog relay with changeover contact shall provide information about the failure.
1.10	Cable Termination	Termination of cable shall be at rear side.
1.11	Time Synchronization	Relay shall be capable of being synchronized with the system clock through SCADA, PC and GPS.
1.12	Auxiliary supply	48 ~ 240V DC universal type.
1.13	**Inputs and Outputs**	
1.14	Analog Module	Refer Single Line Diagram for details of CT,VT secondary circuit for wiring/communications as per purchaser approved documents.
1.15	Ratio corrections	Software based CT,VT Ratio & Vector corrections feature (Without Interposing CT, other CTs).
		Line/cable capacitive current compensation protection

		functions.
1.16	Analog mA input	Min. 04 nos.
1.17	PT-100 direct input	Min.02 nos
1.18	Direct Resistance Input	For tap position indication. (18 steps)
1.19	Configurable Binary input/outputs	Relays Analog(CT,VT), Analog (mA), RTD inputs, Binary inputs, Binary outputs shall be provided as per scheme requirements with additional 4 BI, 4 BO for future use.
1.20	**Control**	
1.21	Control Tasks	Ability to implement control functions through programmable logics.
1.22	Voltage setting	Programmable Voltage set point.
1.23	Voltage Regulation	Raise/Lower tap position to maintain the preset value of voltage.
1.24	Voltage Regulation modes	Automatic and Manual.
1.25	Operation Modes	Local and Remote.
1.26	Fan and Pump control	To be provided.
1.27	Transformer Paralleling	Capability to parallel transformers whose AVRs are interconnected via a communication network. 1. Master – Follower upto 4 transformers. 2. Minimizing circulating current principle.
1.28	**SCADA Interfacing:** As per SCADA specification & site requirements for OLTC, Transformer trouble of Main Tank, OLTC Tank, Cooler Control system, Temperature monitors (OTI,WTI), Tap positions.	
1.29	**Measurement, Event Recording and Monitoring**	
1.30	Measured Quantities (optional)	Voltage, Current, Active Power, Reactive Power, Apparent Power, Power factor, frequency.
1.31	Event Recording	Facility for recording parameters during various events such as tap change, change in binary input status etc.
1.32	Monitoring	Capability to monitor important transformer parameters such as Oil temperature, Winding Temperature etc and give indication/alarm when the value of a particular parameter exceeds the preset value.

2.0 ANNEXURE- B – GUARANTEED TECHNICAL PARTICULARS

Vendor must submit clause wise compliance against specification at the time of drawing approval clearly highlighting the deviations from specification against each clause.

3.0 ANNEXURE- C – SPARES REQUIREMENT

Sl No.	Description	Unit Rate for each Grid/Substation
3.1	Numerical relay of each type	1 nos.
3.2	Auxiliary relay of each type	3 nos.
3.3	Master trip relay of each type	1 nos.
3.4	Contact multiplication relays (Bi-stable type for CB, VT selection)	6 nos.
3.5	Voltmeter / Ammeter / MFM of each type	1 nos.
3.6	Local/Remote Selector switch	2 nos.
3.7	TNC switch for CB	2 nos.
3.8	TNC switch for Isolators	2 nos.
3.9	Semaphore indicators	2 nos.
3.10	MCB of each rating	1 nos.
3.11	Lugs of each type & rating	300 nos.

Note:

1.0 Spares shall be decided based on site requirements & prior approval required from BSES.

1.1 Remote end Line differential relays shall be checked as separate line items along with PO.

1.2 All spare Numerical relays shall be configured & test report submitted by vendor/OEM before dispatch.

1.3 All spare Numerical relays final configured project file shall be submitted.

4.0 ANNEXURE – D – PROTECTION RELAYS MAKE & MODEL

	66KV, 33KV CONTROL & RELAY PANEL : AIS/GIS SS				
Sl.No	Protection	Hitachi	Siemens	Schneider Electric	GE 5th Gen. Micom / Multilin Agile series
1.	Line Differential protection	RED670	7SL86 / 7SL87	P543	P543
2.	Transformer Differential protection	RET670	7UT85	P643/P642	P643/P642
3.	Bay Control & Backup protection	REC670	7SJ85	C264	P143/F60
4.	Cap.Bank protection	REC670 /RET670	7SJ85	C264	P143/F60
5.	Transformer Monitoring Unit TMU/AVR	RET670	7UT85	ABB :REU615	
Note	Any relay's which is phased out /Obsolete /which is going to Obsolete within 3year duration by OEM's shall be rejected automatically.				

5.0 ANNEXURE – E – SLDs

ANNEXURE–E1

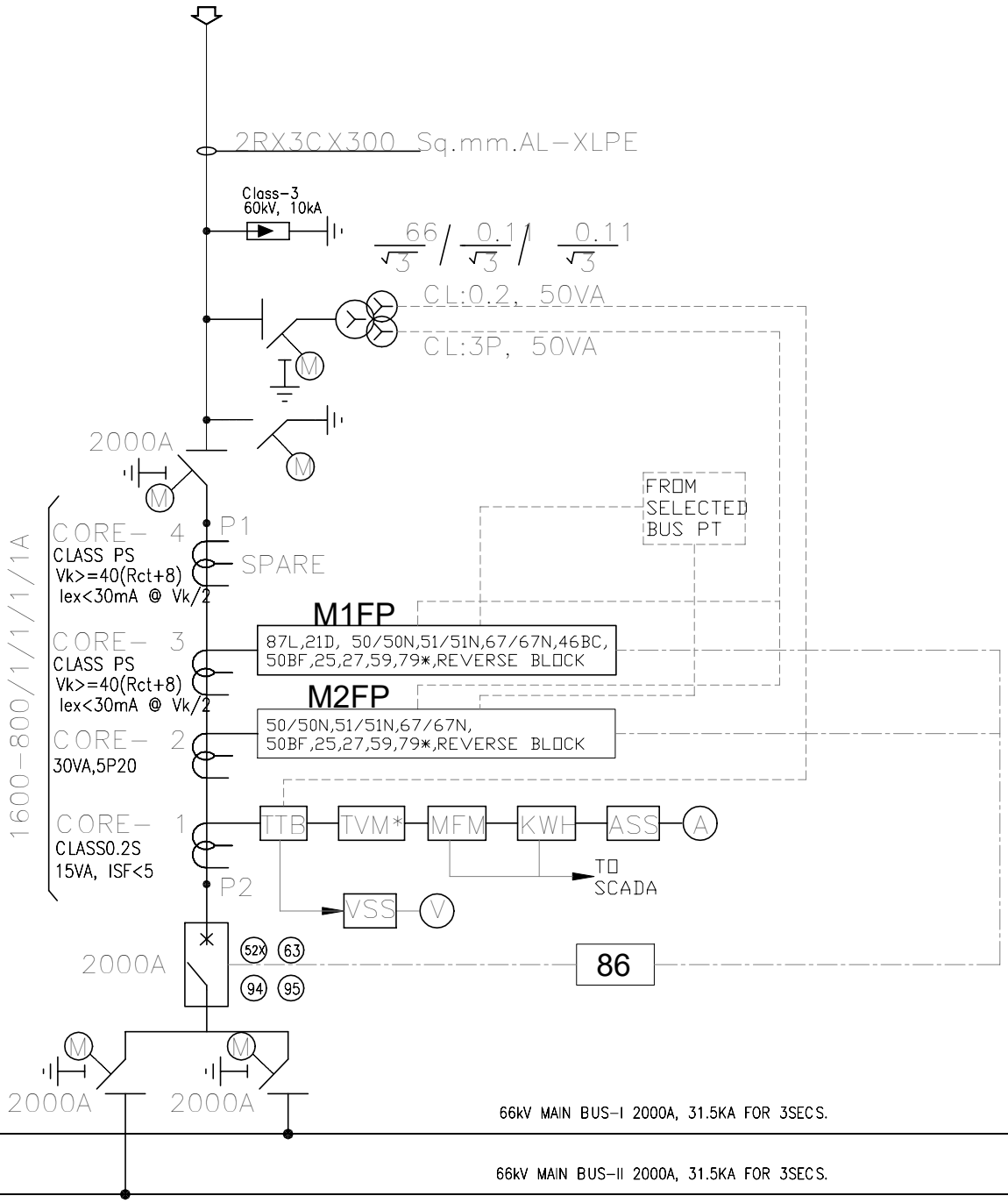

NOTE: 1. REFER SPECIFICATION FOR FUNCTIONAL DETAILS OF PROTECTION RELAYS.
2. TVM IS NOT IN SUPPLIER'S SCOPE.
3. LINE DIFFERENTIAL OR DISTANCE RELAY AS PER CLAUSE 11.5 OF SPECIFICATION
4. BURDENS ARE TENDER PURPOSE ONLY AND MAY CHANGE SUBJECT TO CALCULATIONS DURING DETAILED ENGINEERING.
5. SELECTED VT BASED ON BPT LOGIC FOR PROTECTION AND METERING.
6. THIS DRAWING IS TENTATIVE AND FOR TENDER PURPOSE ONLY.
7. REFER TENDER SPECIFICATION FOR FURTHER DETAILS.

LEGEND

SYMBOL	DESCRIPTION	SYMBOL	DESCRIPTION	SYMBOL	DESCRIPTION
	MOTORISED ISOLATOR WITH ONE E/S		TEST TERMINAL BLOCK		AUTO RECLOSER
	MOTORISED EARTH SWITCH		LINE DIFFRENTIAL PROTECTION		U/V & O/V PROTECTION
	SURGE DIVERTER		DISTANCE PROTECTION		MASTER TRIP RELAY
	CURRENT TRANSFORMER		INS. O/C & E/F PROTECTION		TRIP CIRCUIT SUPERVISION RELAY
	POTENTIAL TRANSFORMER		DIRECTIONAL O/C & E/F PROTECTION		ANTI PUMPING RELAY
	CIRCUIT BREAKER		O/C & E/F PROTECTION		GAS PREASSURE RELAY
	VOLTMETER		BROKEN CONDUCTOR		BREAKER FAILURE PROTECTION
	AMMETER		SYNC CHECK		FUSE FAILURE PROTECTION
	TRIVECTOR METER		CIRCUIT BREAKER CONTACT MULTIPLICATION		

DRAWN	SK
CHECKED	BS
APPD.	AS
DATE	13.08.25
SCALE	NTS

TITLE:– TYPICAL 66KV LINE SLD

BSES

SPEC No – BSES–TS–86–CRP–R1

DWG No.:– SLD–CRP–66KV–01

ANNEXURE–E2

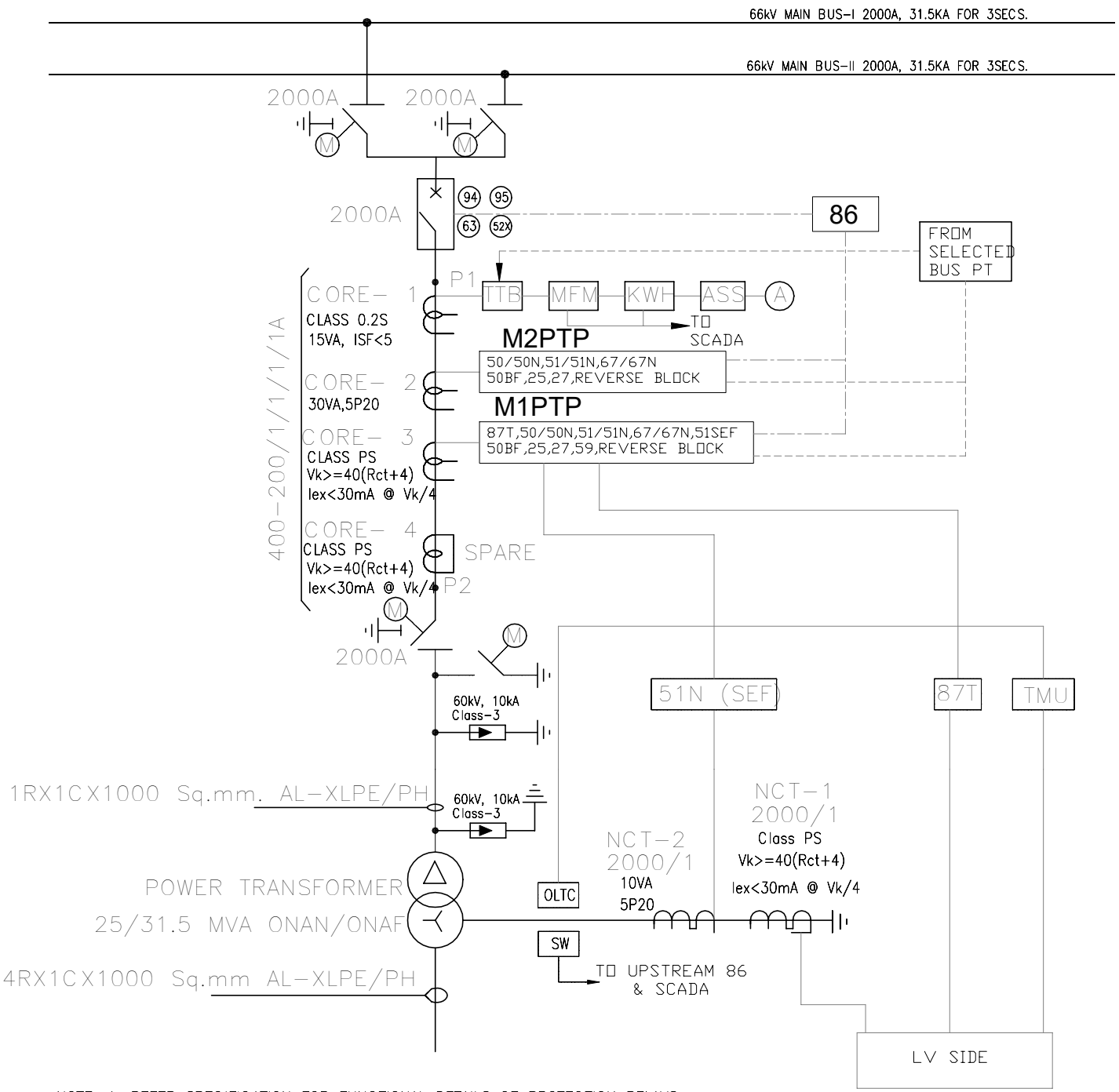

NOTE:
1. REFER SPECIFICATION FOR FUNCTIONAL DETAILS OF PROTECTION RELAYS.
2. TVM IS NOT IN SUPPLIER'S SCOPE.
3. TRF. DIFFERENTIAL RELAY AS PER CLAUSE 11.6 OF SPECIFICATION
4. BURDENS ARE TENDER PURPOSE ONLY AND MAY CHANGE SUBJECT TO CALCULATIONS DURING DETAILED ENGINEERING.
5. SELECTED VT BASED ON BPT LOGIC FOR PROTECTION AND METERING.
6. THIS DRAWING IS TENTATIVE AND FOR TENDER PURPOSE ONLY.
7. REFER TENDER SPECIFICATION FOR FURTHER DETAILS.

LEGEND

SYMBOL	DESCRIPTION	SYMBOL	DESCRIPTION	SYMBOL	DESCRIPTION
	MOTORISED ISOLATOR WITH ONE E/S		TEST TERMINAL BLOCK		AUTO RECLOSER
	MOTORISED EARTH SWITCH		TRFO. DIFFRENTIAL PROTECTION		U/V & O/V PROTECTION
	SURGE DIVERTER		SENSITIVE E/F PROTECTION		MASTER TRIP RELAY
	CURRENT TRANSFORMER		INS. O/C & E/F PROTECTION		TRIP CIRCUIT SUPERVISION RELAY
	POTENTIAL TRANSFORMER		DIRECTIONAL O/C & E/F PROTECTION		ANTI PUMPING RELAY
	CIRCUIT BREAKER		O/C & E/F PROTECTION		GAS PREASSURE RELAY
	VOLTMETER		BROKEN CONDUCTOR		BREAKER FAILURE PROTECTION
	AMMETER		SYNC CHECK		FUSE FAILURE PROTECTION
	TRIVECTOR METER		CIRCUIT BREAKER CONTACT MULTIPLICATION		

DRAWN	SK	TITLE:– TYPICAL 66KV TRF SLD	BSES
CHECKED	BS		
APPD.	AS		SPEC No – BSES–TS–86–CRP–R1
DATE	13.08.25		
SCALE	NTS		DWG No.:– SLD–CRP–66KV–01

ANNEXURE–E3

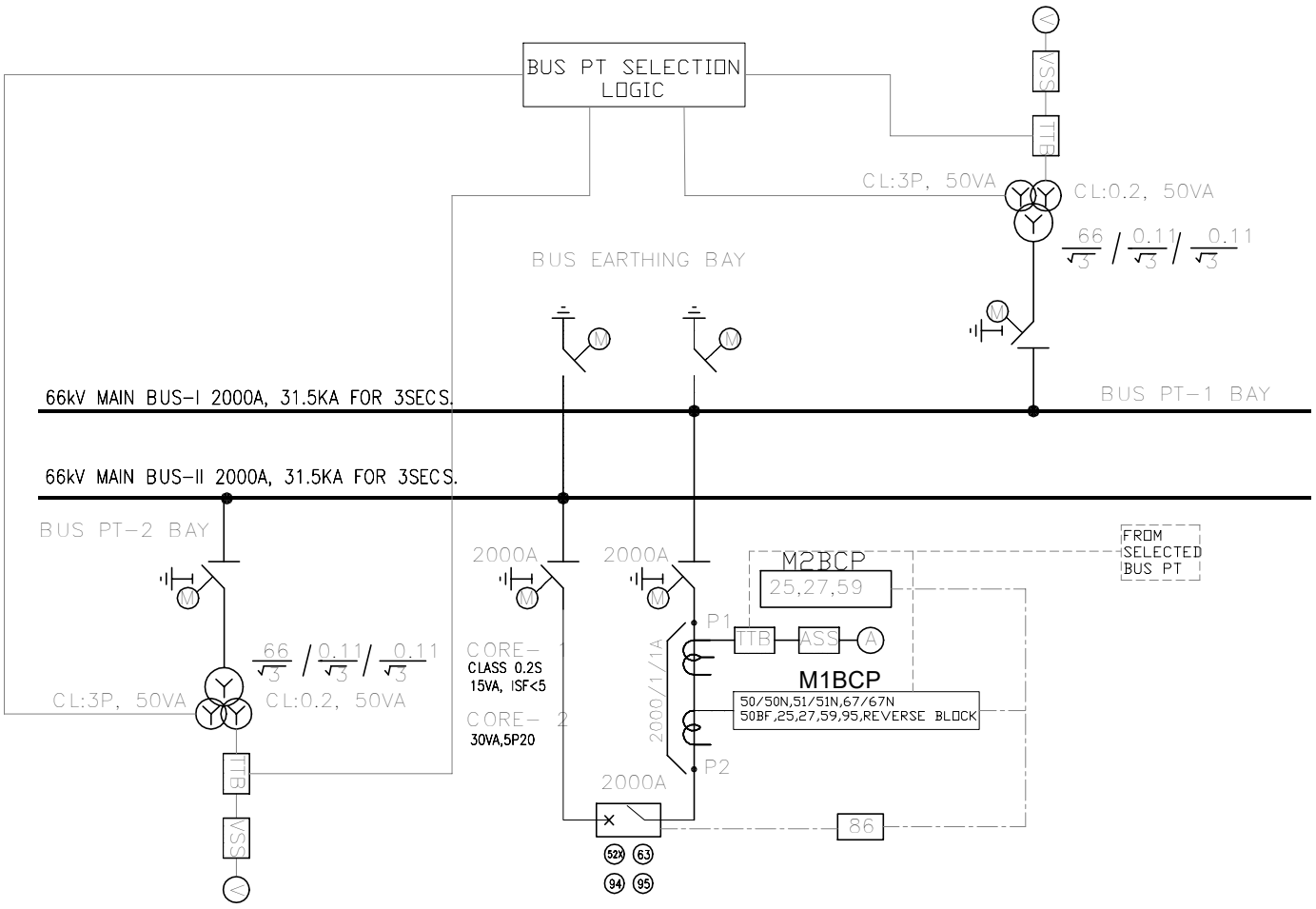

NOTE:
1. REFER SPECIFICATION FOR FUNCTIONAL DETAILS OF PROTECTION RELAYS.
2. TVM IS NOT IN SUPPLIER'S SCOPE.
3. BUS COUPLER OVER CURRENT AND EARTH FAULT RELAY AS PER CLAUSE 11.7 OF SPECIFICATION
4. BURDENS ARE TENDER PURPOSE ONLY AND MAY CHANGE SUBJECT TO CALCULATIONS DURING DETAILED ENGINEERING.
5. SELECTED VT BASED ON BPT LOGIC FOR PROTECTION AND METERING.
6. THIS DRAWING IS TENTATIVE AND FOR TENDER PURPOSE ONLY.
7. REFER TENDER SPECIFICATION FOR FURTHER DETAILS.

LEGEND

SYMBOL	DESCRIPTION	SYMBOL	DESCRIPTION	SYMBOL	DESCRIPTION
	MOTORISED ISOLATOR WITH ONE E/S		TEST TERMINAL BLOCK		
	MOTORISED EARTH SWITCH				U/V & O/V PROTECTION
	SURGE DIVERTER				MASTER TRIP RELAY
	CURRENT TRANSFORMER		INS. O/C & E/F PROTECTION		TRIP CIRCUIT SUPERVISION RELAY
	POTENTIAL TRANSFORMER		DIRECTIONAL O/C & E/F PROTECTION		ANTI PUMPING RELAY
	CIRCUIT BREAKER		O/C & E/F PROTECTION		GAS PREASSURE RELAY
	VOLTMETER		FUSE FAILURE PROTECTION		BREAKER FAILURE PROTECTION
	AMMETER		SYNC CHECK		
	TRIVECTOR METER		CIRCUIT BREAKER CONTACT MULTIPLICATION		

DRAWN	SK	TITLE:– TYPICAL 66KV BC SLD	BSES
CHECKED	BS		SPEC No. – BSES–TS–86–CRP–R1
APPD.	AS		
DATE	13.08.25		DWG No.:– SLD–CRP–66KV–01
SCALE	NTS		

ANNEXURE–E4

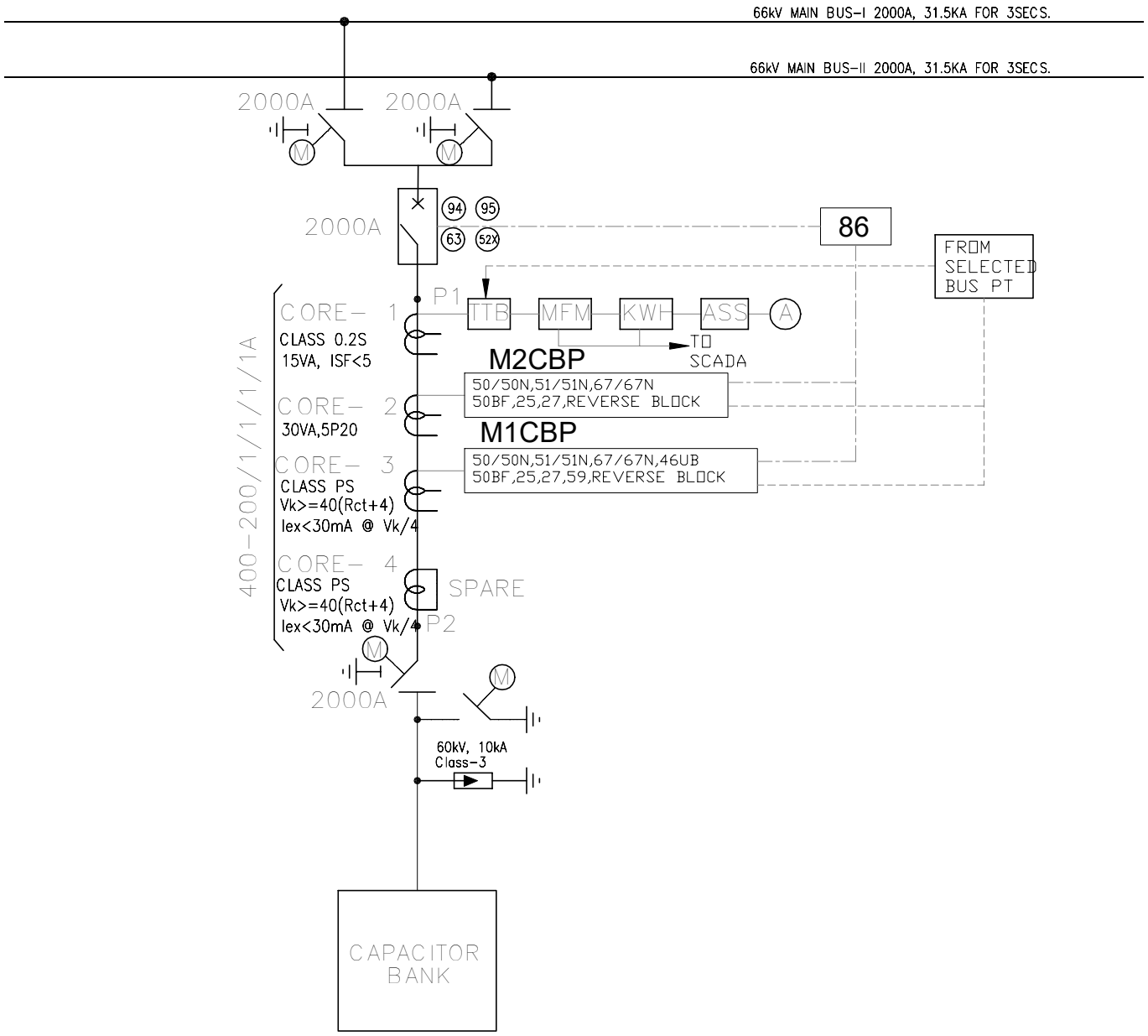

NOTE:
1. REFER SPECIFICATION FOR FUNCTIONAL DETAILS OF PROTECTION RELAYS.
2. TVM IS NOT IN SUPPLIER'S SCOPE.
3. CAPACITOR PROTECTION RELAY AS PER CLAUSE 11.8 OF SPECIFICATION
4. BURDENS ARE TENDER PURPOSE ONLY AND MAY CHANGE SUBJECT TO CALCULATIONS DURING DETAILED ENGINEERING.
5. SELECTED VT BASED ON BPT LOGIC FOR PROTECTION AND METERING.
6. THIS DRAWING IS TENTATIVE AND FOR TENDER PURPOSE ONLY.
7. REFER TENDER SPECIFICATION FOR FURTHER DETAILS.

LEGEND

SYMBOL	DESCRIPTION	SYMBOL	DESCRIPTION	SYMBOL	DESCRIPTION
	MOTORISED ISOLATOR WITH ONE E/S		TEST TERMINAL BLOCK		
	MOTORISED EARTH SWITCH		OUT OF BALANCE PROTECTION		U/V & O/V PROTECTION
	SURGE DIVERTER		FREQUENCY PROTECTION		MASTER TRIP RELAY
	CURRENT TRANSFORMER		INS. O/C & E/F PROTECTION		TRIP CIRCUIT SUPERVISION RELAY
	POTENTIAL TRANSFORMER		DIRECTIONAL O/C & E/F PROTECTION		ANTI PUMPING RELAY
	CIRCUIT BREAKER		O/C & E/F PROTECTION		GAS PREASSURE RELAY
	VOLTMETER		FUSE FAILURE PROTECTION		BREAKER FAILURE PROTECTION
	AMMETER		SYNC CHECK		
	TRIVECTOR METER		CIRCUIT BREAKER CONTACT MULTIPLICATION		

DRAWN	SK	TITLE:– TYPICAL 66KV CAP SLD	BSES
CHECKED	BS		
APPD.	AS		SPEC No – BSES–TS–86–CRP–R1
DATE	13.08.25		
SCALE	NTS		DWG No.:– SLD–CRP–66KV–01

ANNEXURE–E5

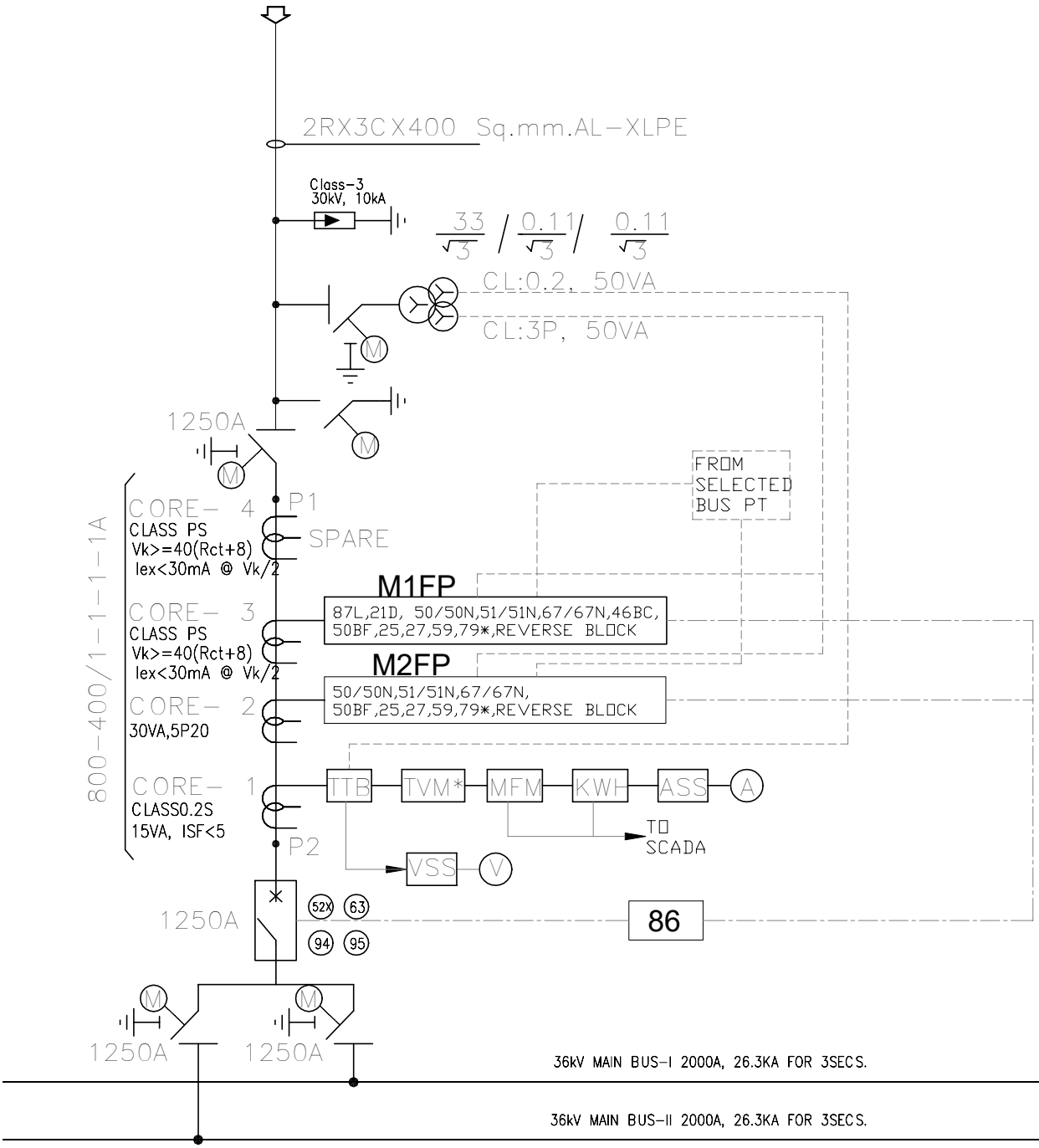

NOTE:
1. REFER SPECIFICATION FOR FUNCTIONAL DETAILS OF PROTECTION RELAYS.
2. TVM IS NOT IN SUPPLIER'S SCOPE.
3. LINE DIFFERENTIAL OR DISTANCE RELAY AS PER CLAUSE 11.5 OF SPECIFICATION
4. BURDENS ARE TENDER PURPOSE ONLY AND MAY CHANGE SUBJECT TO CALCULATIONS DURING DETAILED ENGINEERING.
5. SELECTED VT BASED ON BPT LOGIC FOR PROTECTION AND METERING.
6. THIS DRAWING IS TENTATIVE AND FOR TENDER PURPOSE ONLY.
7. REFER TENDER SPECIFICATION FOR FURTHER DETAILS.

LEGEND

SYMBOL	DESCRIPTION	SYMBOL	DESCRIPTION	SYMBOL	DESCRIPTION
	MOTORISED ISOLATOR WITH ONE E/S		TEST TERMINAL BLOCK		AUTO RECLOSER
	MOTORISED EARTH SWITCH		LINE DIFFRENTIAL PROTECTION		U/V & O/V PROTECTION
	SURGE DIVERTER		DISTANCE PROTECTION		MASTER TRIP RELAY
	CURRENT TRANSFORMER		INS. O/C & E/F PROTECTION		TRIP CIRCUIT SUPERVISION RELAY
	POTENTIAL TRANSFORMER		DIRECTIONAL O/C & E/F PROTECTION		ANTI PUMPING RELAY
	CIRCUIT BREAKER		O/C & E/F PROTECTION		GAS PREASSURE RELAY
	VOLTMETER		BROKEN CONDUCTOR		BREAKER FAILURE PROTECTION
	AMMETER		SYNC CHECK		FUSE FAILURE PROTECTION
	TRIVECTOR METER		CIRCUIT BREAKER CONTACT MULTIPLICATION		

DRAWN	SK	TITLE:– TYPICAL 33KV LINE SLD	BSES
CHECKED	BS		
APPD.	AS		SPEC No – BSES–TS–86–CRP–R1
DATE	13.08.25		
SCALE	NTS		DWG No.:– SLD–CRP–33KV–01

ANNEXURE–E6

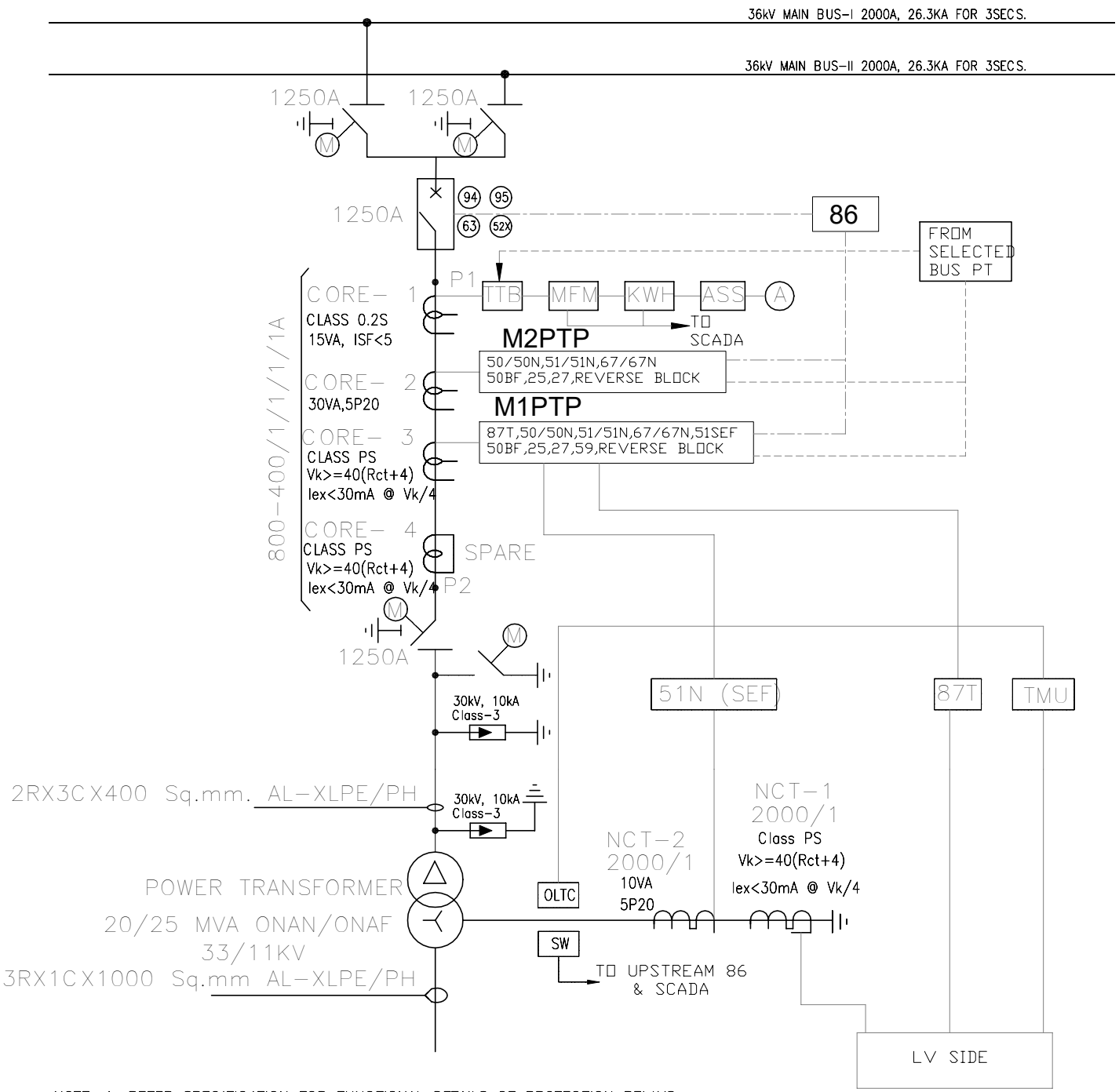

NOTE: 1. REFER SPECIFICATION FOR FUNCTIONAL DETAILS OF PROTECTION RELAYS.
2. TVM IS NOT IN SUPPLIER'S SCOPE.
3. TRF. DIFFERENTIAL RELAY AS PER CLAUSE 11.6 OF SPECIFICATION
4. BURDENS ARE TENDER PURPOSE ONLY AND MAY CHANGE SUBJECT TO CALCULATIONS DURING DETAILED ENGINEERING.
5. SELECTED VT BASED ON BPT LOGIC FOR PROTECTION AND METERING.
6. THIS DRAWING IS TENTATIVE AND FOR TENDER PURPOSE ONLY.
7. REFER TENDER SPECIFICATION FOR FURTHER DETAILS.

LEGEND

SYMBOL	DESCRIPTION	SYMBOL	DESCRIPTION	SYMBOL	DESCRIPTION
	MOTORISED ISOLATOR WITH ONE E/S		TEST TERMINAL BLOCK		AUTO RECLOSER
	MOTORISED EARTH SWITCH		TRFO. DIFFRENTIAL PROTECTION		U/V & O/V PROTECTION
	SURGE DIVERTER		SENSITIVE E/F PROTECTION		MASTER TRIP RELAY
	CURRENT TRANSFORMER		INS. O/C & E/F PROTECTION		TRIP CIRCUIT SUPERVISION RELAY
	POTENTIAL TRANSFORMER		DIRECTIONAL O/C & E/F PROTECTION		ANTI PUMPING RELAY
	CIRCUIT BREAKER		O/C & E/F PROTECTION		GAS PREASSURE RELAY
	VOLTMETER		BROKEN CONDUCTOR		BREAKER FAILURE PROTECTION
	AMMETER		SYNC CHECK		FUSE FAILURE PROTECTION
	TRIVECTOR METER		CIRCUIT BREAKER CONTACT MULTIPLICATION		

DRAWN	SK	TITLE:– TYPICAL 33KV TRF SLD	BSES
CHECKED	BS		
APPD.	AS		SPEC No – BSES–TS–86–CRP–R1
DATE	13.08.25		
SCALE	NTS		DWG No.:– SLD–CRP–33KV–01

ANNEXURE–E7

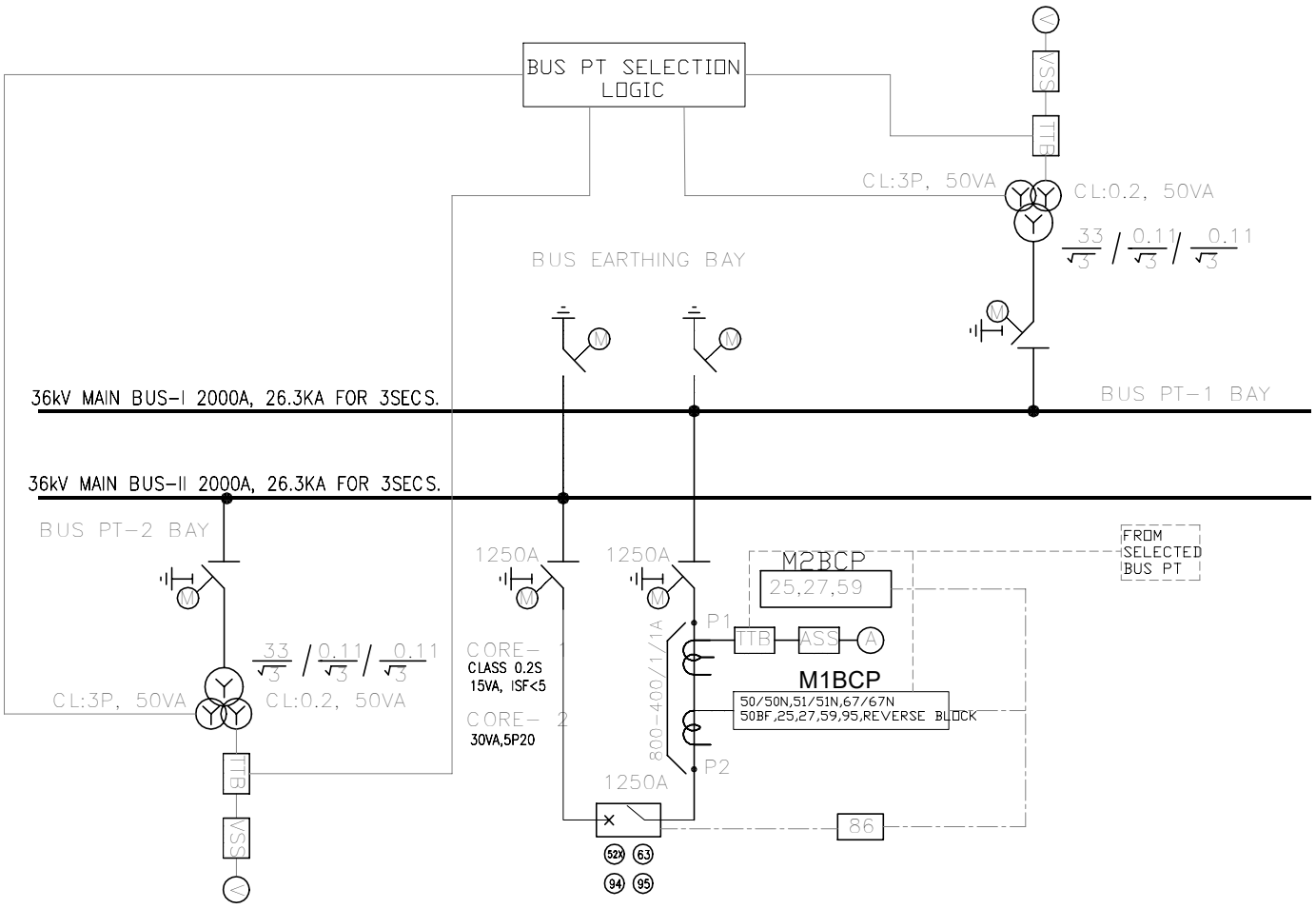

NOTE:
1. REFER SPECIFICATION FOR FUNCTIONAL DETAILS OF PROTECTION RELAYS.
2. TVM IS NOT IN SUPPLIER'S SCOPE.
3. BUS COUPLER OVER CURRENT AND EARTH FAULT RELAY AS PER CLAUSE 11.7 OF SPECIFICATION.
4. BURDENS ARE TENDER PURPOSE ONLY AND MAY CHANGE SUBJECT TO CALCULATIONS DURING DETAILED ENGINEERING.
5. SELECTED VT BASED ON BPT LOGIC FOR PROTECTION AND METERING.
6. THIS DRAWING IS TENTATIVE AND FOR TENDER PURPOSE ONLY.
7. REFER TENDER SPECIFICATION FOR FURTHER DETAILS.

LEGEND

SYMBOL	DESCRIPTION	SYMBOL	DESCRIPTION	SYMBOL	DESCRIPTION
	MOTORISED ISOLATOR WITH ONE E/S		TEST TERMINAL BLOCK		
	MOTORISED EARTH SWITCH				U/V & O/V PROTECTION
	SURGE DIVERTER				MASTER TRIP RELAY
	CURRENT TRANSFORMER		INS. O/C & E/F PROTECTION		TRIP CIRCUIT SUPERVISION RELAY
	POTENTIAL TRANSFORMER		DIRECTIONAL O/C & E/F PROTECTION		ANTI PUMPING RELAY
	CIRCUIT BREAKER		O/C & E/F PROTECTION		GAS PREASSURE RELAY
	VOLTMETER				BREAKER FAILURE PROTECTION
	AMMETER		SYNC CHECK		FUSE FAILURE PROTECTION
	TRIVECTOR METER		CIRCUIT BREAKER CONTACT MULTIPLICATION		

DRAWN	SK	TITLE:– TYPICAL 33KV BC SLD	BSES
CHECKED	BS		SPEC No. – BSES–TS–86–CRP–R1
APPD.	AS		
DATE	13.08.25		DWG No.:– SLD–CRP–33KV–01
SCALE	NTS		

ANNEXURE–E8

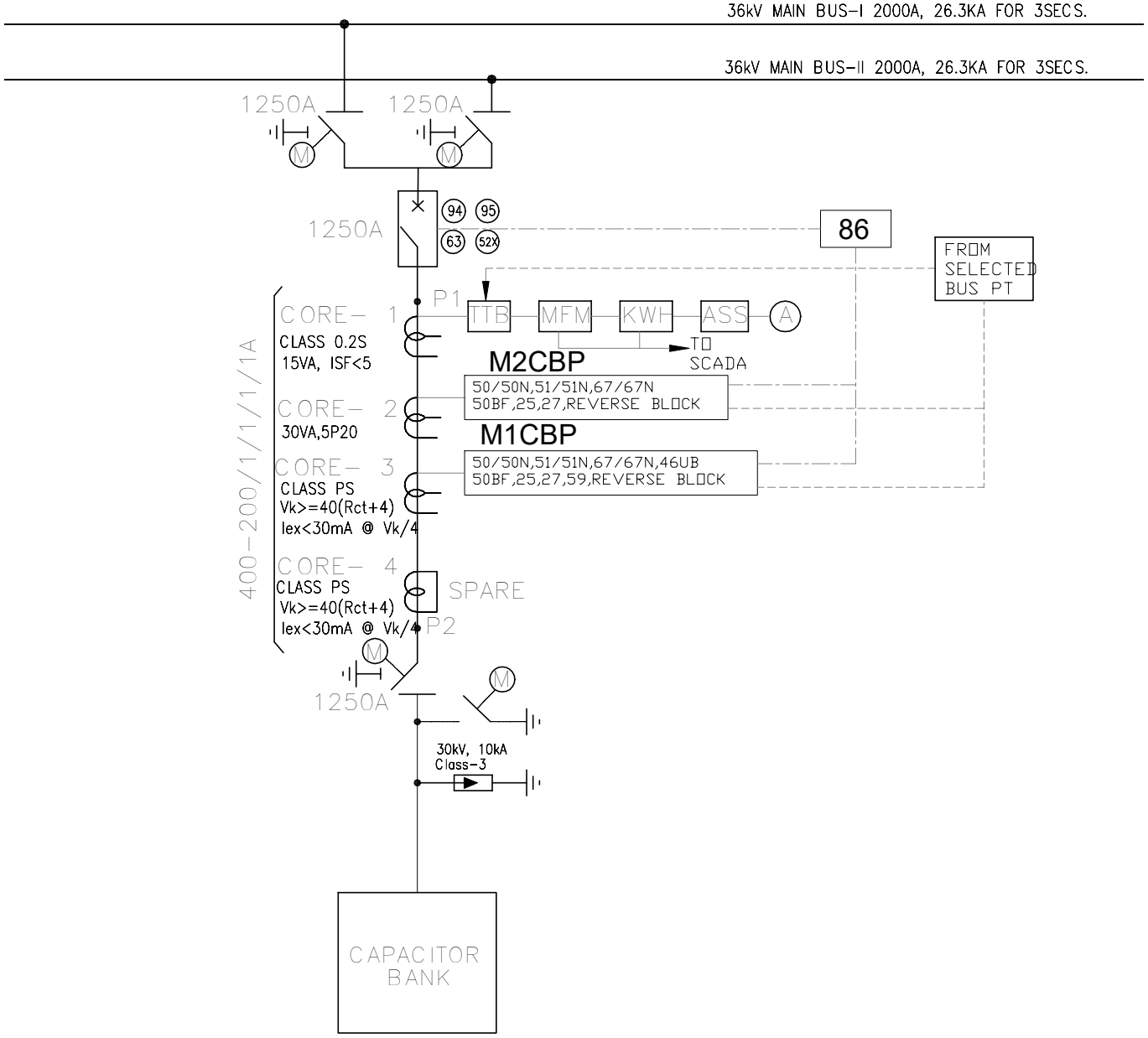

NOTE:
1. REFER SPECIFICATION FOR FUNCTIONAL DETAILS OF PROTECTION RELAYS.
2. TVM IS NOT IN SUPPLIER'S SCOPE.
3. CAPACITOR PROTECTION RELAY AS PER CLAUSE 11.8 OF SPECIFICATION
4. BURDENS ARE TENDER PURPOSE ONLY AND MAY CHANGE SUBJECT TO CALCULATIONS DURING DETAILED ENGINEERING.
5. SELECTED VT BASED ON BPT LOGIC FOR PROTECTION AND METERING.
6. THIS DRAWING IS TENTATIVE AND FOR TENDER PURPOSE ONLY.
7. REFER TENDER SPECIFICATION FOR FURTHER DETAILS.

LEGEND

SYMBOL	DESCRIPTION	SYMBOL	DESCRIPTION	SYMBOL	DESCRIPTION
	MOTORISED ISOLATOR WITH ONE E/S		TEST TERMINAL BLOCK		
	MOTORISED EARTH SWITCH		OUT OF BALANCE PROTECTION		U/V & O/V PROTECTION
	SURGE DIVERTER		FREQUENCY PROTECTION		MASTER TRIP RELAY
	CURRENT TRANSFORMER		INS. O/C & E/F PROTECTION		TRIP CIRCUIT SUPERVISION RELAY
	POTENTIAL TRANSFORMER		DIRECTIONAL O/C & E/F PROTECTION		ANTI PUMPING RELAY
	CIRCUIT BREAKER		O/C & E/F PROTECTION		GAS PREASSURE RELAY
	VOLTMETER		FUSE FAILURE PROTECTION		BREAKER FAILURE PROTECTION
	AMMETER		SYNC CHECK		
	TRIVECTOR METER		CIRCUIT BREAKER CONTACT MULTIPLICATION		

DRAWN	SK	TITLE:– TYPICAL 33KV CAP SLD	BSES
CHECKED	BS		
APPD.	AS		SPEC No – BSES–TS–86–CRP–R1
DATE	13.08.25		
SCALE	NTS		DWG No.:– SLD–CRP–33KV–01

BSES

Technical Specification

For

SMPS Based Battery Charger

Specification no – BSES-TS-73-SMPSBC-R0

Rev		0
Page		1 of 11
Date		05 May 2022
Prepared by	Abhishek Harsh	
	Amar Singh	
Reviewed by	Srinivas Gopu	
	Abhinav Srivastava	
Approved by	Gaurav Sharma	
	Gopal Nariya	

INDEX

1 SCOPE OF SUPPLY 3
2 CODES & STANDARDS 3
3 SERVICE CONDITIONS 3
4 CHARGER DESIGN FEATURES 4
5 METERING, ANNUNCIATION & INDICATION 5
6 APPROVED MAKE OF COMPONENTS 7
7 MIMIC DIAGRAM, LABEL & FINISH 7
8 QUALITY ASSURANCE, INSPECTION & TESTING 8
9 DEVIATIONS 8
10 GTP 8
11 DRAWING AND DATA SUBMISSION MATRIX 9
12 PACKING 10
13 SHIPPING 11
14 HANDLING AND STORAGE 11

1 SCOPE OF SUPPLY

This specification covers the design, manufacturing, testing, supply, erection & commissioning of 20 VDC/ 50 VDC SMPS based 2X100% Float Cum Boost Charger at site for indoor installation with all necessary accessories associated with it.
Specification covers Type 1 and Type 2 Battery Charger. Type 1 Battery Charger is for Grid Substations while Type 2 Battery Charger is for BSES HT Customers.

.

2 CODES & STANDARDS

Material, equipment and methods used in the manufacture of battery charger shall confirm to the latest edition of following

Indian Electricity Rules	
Indian electricity act	
CBIP manual	
IS 3895	Specification for rectifier equipment in general
IS 5921	Printed circuit boards
IS 6619	Safety code for semiconductor devices
IS 4540	Semiconductor rectifier assemblies and equipment
IS 694	PVC Insulated Cables for Working Voltage up to and including 1100V
IS 1248	Direct Acting Electrical indicating instruments
IS 2705	Current transformer
IS 3156	Voltage transformer
IS 3231	Electric relay for power system protection
IS 5578	Guide for making of insulated conductors
IS 8623	Low voltage switchgear and control gear assemblies
IS 13703	Low voltage fuses for voltages not exceeding 1000AC
IS 12063	Degree of enclosure protection
IS5	Color of mixed paints
IS 6297	Transformer & inductors for electronic equipment
IS 6553	Environment requirements for semiconductor device
IS 4007	Terminals for electronic equipment

3 SERVICE CONDITIONS

3.1	Max Ambient Temperature	50 deg C
3.2	Max Daily average ambient temp	40 deg C
3.3	Min Ambient Temp	0 deg C
3.4	Maximum Humidity	95%
3.5	Minimum Humidity	10%
3.6	Maximum annual rainfall	750 mm

3.7	Average no of rainy days per annum	60
3.8	Rainy months	June to Oct
3.9	Altitude above MSL	300 M
3.10	Seismic Zone	IV

4 CHARGER DESIGN FEATURES

4.1	Type	SMPS Based
4.2	Rating	For Type-1 Battery Charger a. 70 A for 50 V b. 35 A for 220 V For Type-2 Battery Charger a. 35 A for 50 V b. 20 A for 220 V
4.3	Configuration	2X100% Float cum Boost Charger.
4.4	Incoming Supply	Provision of Two Incoming Supply with Auto Changeover Facility
4.5	Automatic Phase Sequence Corrector	a. For 3 phase supply in right sequence, phase conversion. b. Protect equipment from phase reversal, phase loss.
4.6	Panel type	Metal enclosed frame construction
4.7	Overall Dimension	L - 1500 mm x D - 700 mm x H - 1900 mm
4.8	Cable Entry	Bottom
4.9	Location	Indoor, non air conditioned environment
4.10	Doors for front access	With anti theft hinge &handle
4.11	Cover for rear access	With Allen screw M6 size & handle
4.12	Construction	Sheet metal 2.0mm thick CRCA
4.13	Base frame	75mm ISMC
4.14	Lifting lugs	Four number
4.15	Gland plate	3mm metallic, un drilled & removable type
4.16	Enclosure protection	IP42 Minimum
4.17	Power terminal	Bus bar type, minimum 300mm above gland plate
4.18	Control terminal	Nylon66 with brass clamp
4.19	Bus bar	Tinned copper with insulation sleeve
4.20	Earth bus bar	Aluminum sized for rated fault duty for 1sec
4.21	Earth bus internal connection to all non current carrying metal parts	By copper flexible wire 2.5 sqmm
4.22	Earth bus external connection to owner earth	Al bus on both sides of panel with two holes for M10 bolt
4.23	Cooling	With Exhaust Fan
4.24	Panel heater	Thermostatically controlled through MCB
4.25	Panel internal wiring	Multi strand flexible color coded PVC insulated copper wire 1.5 sqmm 1100volt grade with 1.5 sqmm ferruling

		(other than circuit wiring related to PCB cards)
4.26	Isolation & protection device	Mounted at height minimum 1000mm from bottom
4.26.1	MCCB	For charger input, output & battery input
4.26.2	Battery & test resistor load	Lockable change over switch with one position for charger, second for 'OFF' & third position for external test resistor.
4.27	Hardware (Nut, bolts & handle)	Stainless steel
4.28	Essential provision	Surge suppression, harmonic suppression, blocking diodes, filters for ripple control
4.29	Insulating shrouds	On all live parts, power semi conductors & electronic components
4.30	Ripple content in DC output	0.5 % maximum
4.31	DC output voltage regulation	Maximum ±1% of rating with AC input supply variation of ±10% from 415 volts, frequency variation of ±5% from 50 HZ and simultaneous load variation of 0-100%
4.32	Reverse polarity connection	Protected against reversed battery polarity
4.33	Charger efficiency	90% minimum at Rated Load
4.34	Noise output	65DB maximum
4.35	Charger selector switch	For auto/manual and float/boost selection, lockable type inside panel
4.36	Charging current settings	25% to 100% of rating
4.37	Charging current accuracy	2% of set current with input voltage variation of ±10% and frequency variation of ±5%
4.38	Auto and Manual DC output adjustment range for float & boost charge (voltage & current)	By potentiometers inside panel, range suitable for battery bank. Charger suitable for other type of batteries if offered, shall be subject to buyer's approval.
4.39	Louvers	With stainless steel wire mesh
4.40	Gasket	Neoprene rubber
4.41	Panel illumination lamp with door switch	MCB controlled, with 5/15amp switch socket
4.42	Panel door keys	4 no. per panel, identical key for all panels
4.43	PCBs for electronic circuitry	With protective layer finish at back
4.44	PCB soldering	Preferably by wave soldering process
4.45	PCB/ electronic card mounting	With press fit type locking arrangement
4.46	Semiconductor component mounting	Shall not be on bakelite sheet

5 METERING, ANNUNCIATION & INDICATION

5.1	Ammeter (96x96mm)	Digital type, for AC input, DC output & battery current. Auxiliary supply for meters should be 48V to 230V AC/DC (Universal type)
5.2	Voltmeter (96x96mm)	Digital type, with selector switch for AC input, DC output & battery voltage. Auxiliary supply for meters should be 48V to 230V AC/DC (Universal type)

5.3	LED indication on panel front	
5.3.1	Status	
5.3.1.1	Input AC supply available on R,Y & B phase	Red/yellow/blue color LED
5.3.1.2	Float cum Boost charger AC MCCB 'ON'	Red color LED for each charger module
5.3.1.3	Charger output DC 'ON'	Red color LED for each charger module
5.3.1.4	Outgoing DCDB feeder ON	Red color LED for each other
5.3.2	Fault	
5.3.2.1	DC earth fault	Amber color LED
5.3.2.2	Battery MCCB OFF	Amber color LED
5.3.2.3	Charger output DC under/ over voltage	Amber color LED
5.3.2.4	AC mains undervoltage	Amber color LED
5.4	Annunciation	Hooter with isolating switch for fault annunciation.
5.5	Potential free contacts for remote indication to be wired upto terminal block	a. AC under voltage b. AC over voltage c. CH-A AC MCCB trip/OFF d. CH-B AC MCCB trip/OFF e. CH-A Rect/Cond. fuse fail f. CH-B Rect/Cond. fuse fail g. CH-A DC MCCB trip/OFF h. CH-B DC MCCB trip/OFF i. Battery MCCB trip/OFF j. CH-A DC under voltage k. CH-B DC under voltage l. CH-A DC over voltage m. CH-B DC over voltage n. Battery DC under voltage o. Battery DC over voltage p. DC Bus over voltage q. DC Earth fault r. Battery Charger in boost mode
5.6	Microprocessor based monitoring unit cum controller	Charger should have a microprocessor based controller
5.6.1	Analog signals to be monitored by controller	a. AC Input Voltage and current b. DC output voltage and current for Charger -1 and Charger -2 c. Battery voltage and current
5.6.2	Alarms/Faults signals to be monitored by controller	a. AC under voltage b. AC over voltage c. CH-A AC MCCB trip/OFF d. CH-B AC MCCB trip/OFF e. CH-A Rect/Cond. fuse fail f. CH-B Rect/Cond. fuse fail g. CH-A DC MCCB trip/OFF h. CH-B DC MCCB trip/OFF i. Battery MCCB trip/OFF

		j. CH-A DC under voltage k. CH-B DC under voltage l. CH-A DC over voltage m. CH-B DC over voltage n. Battery DC under voltage o. Battery DC over voltage p. DC Bus over voltage q. DC Earth fault r. Battery Charger in boost mode
5.6.3	SCADA Interfacing	Microprocessor controller should have RS485 port capable of transmitting all analog and alarm/fault signal to RTU on open MODBUS protocol. Any hardware/software required to achieve the said compatibility shall be in bidder's scope.
5.6.4	Display	Backlit display capable of displaying all the analog and fault/alarm signals mentioned above.

6 APPROVED MAKE OF COMPONENTS

6.1	Switch	Siemens / L&T (Salzer)
6.2	HRC Fuse Links	GE/ Siemens/ L&T
6.3	Diodes & SCR	Hirect/USHA/IOR
6.4	Meters	AE/Rishabh
6.5	AC Contractors &O/L Relay	L&T/Siemens/Telemechanique/GE/ABB
6.6	Terminals	Connectwell/Elmex/Wago/Phoenix
6.7	Push buttons / Actuator	L&T/Siemens/Vaishno
6.8	MCCB	L&T/Siemens/ ABB/GE
6.9	MCB	Datar/Legrand/Hager/Schneider
6.10	Indicating lamps LED type	Vaishno/Binay/Teknic/Siemens/Mimic

7 MIMIC DIAGRAM, LABEL & FINISH

7.1	Mimic diagram	To be provided
7.2	Name plate on panel front	
7.2.1	Material	Anodized aluminum 16SWG
7.2.2	Background	SATIN SILVER
7.2.3	Letter, diagram & boder	Black
7.2.4	Process	Etching
7.2.5	Name plate details	a. Manufacturer name b. Month & year of manufacture c. Equipment type d. Input & Output rating e. Owner name & order number f. Guarantee period g. Weight of panel h. Degree of protection i. Sr. No.
7.3	Labels for meters, indication &	Anodized aluminum with white character on black

	all cards / sub assemblies in panel	background
7.4	Danger plate on front & rear side	Anodized aluminum with white letters on red background
7.5	Painting surface preparation	Shot blasting or chemical 7 tank process
7.6	Painting external finish	Powder coated polyester base grade A, shade –RAL 7032, uniform
7.7	Painting internal finish	Powder coated polyester base grade A, shade – white, uniform thickness 50 micron minimum
7.8	Labels for all components in panel	Anodized aluminum with white character on black background, fixed by rivets only
7.9	SLD	SLD of charges shall be provided at backside of the main door of Charger on Aluminium plate

8 QUALITY ASSURANCE, INSPECTION & TESTING

8.1	Vendor quality plan	To be submitted for purchaser approval
8.2	Inspection points	To be mutually identified & agreed in quality plan
8.3	Type test	Equipment should be of type tested quality only, type test certificate to be submitted along with offer. If the manufacturer's lab is accredited by govt. / authorized body then it shall be acceptable for type testing.
8.4	Routine test	As per relevant Indian standard
8.5	Acceptance test	To be performed in presence of Owner at manufacturer works a. Physical inspection & BOM, wiring check b. Insulation resistance test c. HV test for one minute d. Voltage regulation test e. Heat run test for 12 hours f. Measurement of efficiency, power factor & ripple content

9 DEVIATIONS

Deviation from this specification shall be stated in writing with the tender by reference to the specification clause/ GTP/ Drawing and description of alternative offer. In absence of such a statement, it shall be assumed by the buyer that the seller complies fully with this specification.

10 GTP

Vendor must submit clause wise compliance against specification at the time of drawing approval clearly highlighting the deviations from specification against each clause.

11 DRAWING AND DATA SUBMISSION MATRIX

S. No	Head	Bid	Drawing Approval	Pre Dispatch	Pre Closure
11.1	Contact Person Name, Email ID and Mobile Number	Required	Required		
11.2	Deviation Sheet (as per "Deviations" Clause)	Required			
11.3	GTP		Required		
11.4	Relevant Type Test as per IS/IEC/UL	Required	Required		
11.5	Manufacturer's quality assurance plan and certification for quality standards		Required		
11.6	Sizing Calculation of Associated Equipment		Required		
11.7	Recommended Spares for five years of operation)		Required		
11.8	**Battery Charger Drawing**				
11.8.1	General Arrangement	Required	Required		
11.8.2	Sectional Layout		Required		
11.8.3	Cabinet Layout		Required		
11.8.4	SLD	Required	Required		
11.8.5	Schematic Circuit diagram and Scheme of Each type of Panel		Required		
11.8.6	Communication Architecture		Required		
11.8.7	QAP		Required		
11.8.8	BOQ		Required		
11.8.9	Plan		Required		
11.8.10	Foundation Diagram		Required		
11.8.11	Make of all Component as per specification		Required		
11.8.12	Drawing of Substation Room		Required		
11.9	Installation, erection and commissioning manual		Required		

S. No	Head	Bid	Drawing Approval	Pre Dispatch	Pre Closure
11.10	Inspection Reports			Required	
11.11	As manufacturing Drawings			Required	
11.12	Operation and Maintenance Manual			Required	
11.13	Trouble shooting manual			Required	
11.14	As built Drawings				Required

12 PACKING

12.1	Packing Protection	Against corrosion, dampness, heavy rains, breakage and vibration. During transportation/ transit and storage, module may be subjected to outdoor conditions. Hence, packing of each panel shall be weatherproof.
12.2	Packing for accessories and spares	Robust wooden non returnable packing case with all the above protection & identification Label
12.3	Packing Identification Label to be provided on each packing case with the following details	
12.3.1	Individual serial number	
12.3.2	Purchaser's name	
12.3.3	PO number (along with SAP item code, if any) & date	
12.3.4	Equipment Tag no. (if any)	
12.3.5	Destination	
12.3.6	Project Details	
12.3.7	Manufacturer / Supplier's name	
12.3.8	Address of Manufacturer / Supplier / it's agent	
12.3.9	Description and Quantity	
12.3.10	Country of origin	
12.3.11	Month & year of Manufacturing	
12.3.12	Case measurements	
12.3.13	Gross and net weights in kilograms	
12.3.14	All necessary slinging and stacking instructions	
12.4	Packing Protection	Against corrosion, dampness, heavy rains, breakage and vibration. During transportation/ transit and storage, module may be subjected to outdoor conditions. Hence, packing of each panel shall be weatherproof.
12.5	Packing for accessories and spares	Robust wooden non returnable packing case with all the above protection & identification Label
12.6	Packing Identification Label to be provided on each packing case with the following details	

12.6.1	Individual serial number
12.6.2	Purchaser's name
12.6.3	PO number (along with SAP item code, if any) & date
12.6.4	Equipment Tag no. (if any)
12.6.5	Destination
12.6.6	Project Details
12.6.7	Manufacturer / Supplier's name
12.6.8	Address of Manufacturer / Supplier / it's agent
12.6.9	Description and Quantity
12.6.10	Country of origin
12.6.11	Month & year of Manufacturing
12.6.12	Case measurements
12.6.13	Gross and net weights in kilograms
12.6.14	All necessary slinging and stacking instructions

13 SHIPPING

13.1	Shipping	The bidder shall ascertain at an early date and definitely before the commencement of manufacture, any transport limitations such as weights, dimensions, road culverts, Overhead lines, free access etc. from the Manufacturing plant to the project site. Bidder shall furnish the confirmation that the proposed Packages can be safely transported, as normal or oversize packages, up to the site. Any modifications required in the infrastructure and cost thereof in this connection shall be brought to the notice of the Purchaser.
		The seller shall be responsible for all transit damage due to improper packing.

14 HANDLING AND STORAGE

14.1	Handling and Storage	Manufacturer instruction shall be followed. Detail handling & storage instruction sheet / manual needs to be furnished before commencement of supply.

BSES

Technical Specification

Of

Direct Current Distribution Board

Specification no – BSES-TS-71-DCDB-R0

Rev:		0
Pages:		1 of 16
Date:		02 May 2022
Prepared by	Abhishek Harsh	
	Amar Singh	
Reviewed by	Srinivas Gopu	
	Abhinav Srivastava	
Approved by	Gaurav Sharma	
	Gopal Nariya	

INDEX

1 SCOPE 3
2 STANDARDS AND CODES 3
3 SERVICE CONDITION 3
4 CONSTRUCTION 4
5 CONFIGURATION 5
6 BUSBARS 6
7 TERMINALS AND WIRING 6
8 METERS, INDICATIONS, PUSH BUTTONS & HEATERS 7
9 NAME PLATES & MARKINGS 7
10 FINISH 8
11 APPROVED MAKES OF COMPONENTS 8
12 INSPECTION AND TESTING 9
13 PACKING, SHIPPING, HANDLING AND SITE SUPPORT 9
14 DEVIATIONS 10
15 DOCUMENT SUBMISSION 10
16 GUARANTEED TECHNICAL PARTICULARS 11

1 SCOPE

This specification covers the design, engineering, manufacture, assembly and testing at Manufacturer's works and supply of 220 VDC/50 VDC Distribution board (DCDB) along with all hardware and accessories required for installation and operation.
Specification covers Type 1 and Type 2 DCDB. Type 1 DCDB is for Grid Substations while Type 2 DCDB is for BSES HT Customers.

2 STANDARDS AND CODES

2.1	IS:8623	Specification for factory built assemblies of switchgear & control gear for voltages up to and including 1000V AC/1200 V DC.
2.2	IS 60947-1	Specification for Low-voltage Switchgear and Controlgear - Part 2 :Circuit Breakers
2.3	IS:10118	Code of practice for selection, installation and maintenance switchgear and control gear
2.4	IS:2705	Current transformers
2.5	IS:3231	Electrical relays for power system protection
2.6	IS:1248	Electrical Indicating instruments
2.7	IS:4794	Switches and push buttons
2.8	IS:6005	Code of practice of phosphating iron and steel
2.9	IS:5082	Wrought Aluminium and aluminum alloys for electrical purposes
2.10	IS 3043	Code of practice for Earthing

3 SERVICE CONDITION

3.1	Location	Indoor
3.2	Average grade atmosphere	Heavily polluted, Dry
3.3	Maximum altitude above sea level	1000M
3.4	Ambient air temperature	Highest 50Deg C Average 40Deg C
3.5	Minimum ambient air temperature	0 Deg C
3.6	Relative Humidity	100%

3.7	Rainfall	750mm concentrated in four months
3.8	Seismic Zone	IV

4 CONSTRUCTION

4.1	General construction	It shall be free-standing type comprising dust-tight and vermin-proof sheet steel cabinets suitable for indoor installation with IP-54 degree of protection. Necessary busbar support insulators, cable glands, cable supports and terminal blocks etc. The board shall preferably be of single front type.
4.2	Material	The Board shall be made cold rolled steel sheet having Thickness of 2.5 mm of load bearing member and 2 mm for Doors and covers , suitably reinforced to provide flat level surfaces. No welds, rivets, hinges or bolts shall be visible from outside.
4.3	Equipment Mounting	All switches provided on the distribution board shall be on front side of the cabinets, operable from outside. All instruments and control devices shall be mounted on the front of cabinets and fully wired to the terminal blocks.
4.4	Busbar housing	The busbars shall be housed in totally enclosed busbar chambers. Incoming connections from the busbar to various feeders shall be designed so as not to disturb cable connections. Busbar arrangement should ensure safety of the operation/maintenance personnel and facilitate working on any outgoing module without the need for switching off in-feed to the adjacent modules, as far as possible
4.5	Cable alleys	A cable alley preferably 230 mm wide shall be provided in each vertical section for taking cables into the compartments. Cable alleys shall be provided on sides of busbar chamber.
4.6	Cable entry	Cable entry should be from bottom
4.7	Cable glands	Compression type cable glands shall be provided to hold the cables to avoid any pressure or tension on the terminal block connections.
4.8	Gland Plate	Gland plate shall be 3.0mm thick.
4.9	Doors	The doors of cabinets shall be lockable and shall be fitted with double lipped gaskets.
4.10	Gasket	All doors, removable covers and panels shall be gasketed all around with neoprene gaskets. Gaskets shall be embedded through machine only.
4.11	Ventilating louvers	Ventilating louvers shall have screens and filters. The screens shall be made of either brass or GI wires mesh.

4.12	Foundation	The panels shall be fixed on the embedded foundation channels with intervening layers anti vibration strips made of shock absorbing materials.
4.13	Base Frame	Base frames shall be supplied along with panels. 100mm channel painted black.
4.14	Mounting	Equipment on front of panel shall be flush mounted. No equipment shall be mounted on the doors.
4.15	Working level	The center lines of switches, push buttons and indicating lamps shall not be less than 750mm and higher than 1600mm from panel base.
4.16	Dimension	500(L)X500(D)X1800(H) mm^3

5 CONFIGURATION

5.1	Incomers	One incomers having Double Pole DC MCB with Aux Switch.
5.2	Outgoing feeders	All outgoing feeders shall have MCB. Number of outgoing feeders shall be as per table attached

Application	No of Poles	Type-1		Type-2	
		Rating of MCB (In Amp)	Quantity	Rating of MCB (In Amp)	Quantity
Incomer	2	100	1	50	1
Emergency Lighting DB	2	32	1	16	1
Fire Alarm System	2	32	1	16	0
SCADA	2	32	2	16	1
CRP/33 kV/66 kV Switchgear	2	32	4	16	1
11 kV Switchgear	2	32	4	16	0
Testing Purpose	2	32	1	16	1
NIFPS	2	32	4	16	0
Spare 1	2	100	1	50	1
Spare 2	2	32	4	16	2

6 BUSBARS

6.1	Material	Busbar shall be of tinned electrolytic copper or Aluminium
6.2	Size	Suitable for carrying the rated continuous current of 100 A and short circuit current of 15 kA. Busbars shall be continuous throughout the panel. Temperature rise should be limited to 40 degrees over ambient.
6.3	Supports	The busbar shall be supported by means of durable non-hygroscopic, non-combustible and non-tracking polyester fiberglass material or porcelain. Supports shall be capable of withstanding the maximum short circuit stresses.
6.4	Sleeves and shrouds	Busbars shall be encased in heat-shrinkable sleeves of insulating material which shall be suitable for the operating temperature of busbars during normal service. The busbar joints shall be provided with removable thermosetting plastic shrouds.

7 TERMINALS AND WIRING

7.1	Wiring	
7.1.1	Grade and type	1100 V grade, PVC insulated, FRLS type stranded flexible copper wire.
7.1.2	Ferruling	Each wire shall bear an identifying ferrule or tag at each end or connecting point.
7.1.3	Spare	20% Spare Wiring
7.2	Terminals	Terminals of appropriate size shall be provided inside each cabinet for incoming and outgoing cables.
7.2.1	Grade	1100 V grade, moulded piece terminals complete with insulated barriers, washers, nuts and lock nuts.
7.2.2	Power Terminals type	Stud type, nut driver operated
7.2.3	Control terminals type	Stud type, screw driver operated
7.2.4	Spare terminals	20% spare terminals should be provided in each terminal block.
7.2.5	Accessibility	Placement of terminals shall enable proper cable termination. Terminals shall be readily accessible for inspection and maintenance.
7.2.6	Marking	The terminals shall be serially numbered to facilitate installation and maintenance.

8 METERS, INDICATIONS, PUSH BUTTONS & HEATERS

8.1	Meters	
8.1.1	Ammeter	DC Moving coil ammeter of size 96 sq.mm. with external shunt. Rating of Ammeter shall be 0-100A DC.
8.1.2	Voltmeter	DC Moving coil voltmeter of size 96.sq.mm to read the DC Bus voltage. Rating of Voltmeter shall be 0-300VDC
8.1.3	Type	Digital type, connected through instruments transformers of suitable rating.
8.2	Indicating lamps	Indicating lamps shall be of low wattage cluster LED type.
8.2.1	Incomer/ Outgoing On	Red
8.2.2	Incomer/ Outgoing Off	Green
8.2.3	Incomer/ Outgoing Trip	Amber
8.3	Push buttons	For manual operation of incomer MCB
8.4	Heaters	Cubicle space heater having rating of 100W. Thermostat for space heater shall be provided with temperature range $0\text{-}90^0$
8.5	CFL	Cubicle lamp shall be provided in DCDB having rating of 11 W.

9 NAME PLATES & MARKINGS

9.1	Panel nameplate	Panel shall have a nameplate clearly indicating the following: a. Panel Serial No.- b. Customer Name - BSES Yamuna/Rajdhani Power Ltd c. PO No. & date - d. Type of Panel - e. Current rating - f. Guarantee period -
9.2	Feeder nameplate	Large and bold name plate carrying the feeder identification shall be provided on the top.
9.3	Equipment nameplate	a. All equipment mounted on front side as well as equipment mounted inside the panels shall be provided with individual name plates with equipment designation engraved. b. All front mounted equipment shall be also provided

		at the rear with individual name plates engraved with tag numbers corresponding to the one shown in the panel internal wiring to facilitate easy tracing of the wiring.
9.4	Material	Non-rusting metal or 3 ply lamicoid. Nameplates shall be black with white engraving lettering. Stickers are not allowed.
9.5	Fixing	All nameplates/rating plates shall be riveted to the panels at all four corners. Bolting/screwing is not acceptable.
9.6	Markings	Each switch shall bear clear inscription identifying its function. Similar inscription shall also be provided on each device whose function is not other wise identified. If any switch or device does not bear this inscription separate nameplate giving its function shall be provided for it. Switch shall also have clear inscription for each position indicating e.g. Trip-Neutral close, ON-OFF etc.

10 FINISH

10.1	Primer	Two coats
10.2	Paint	Two finishing coats of epoxy based paint of Shade RAL 7032 with glossy finish.
10.3	Paint thickness	50 microns (minimum)

11 APPROVED MAKES OF COMPONENTS

11.1	Switch	Siemens / L&T (Salzer)
11.2	HRC Fuse Links	GE/ Siemens/ L&T
11.3	Meters	Rishabh/Schneider/AE
11.4	Terminals	Connectwell/Elmex/Wago/Phoenix
11.5	Push buttons / Actuator	L&T/Siemens/Vaishno/Schneider
11.6	MCB	Datar/Legrand/Hager/Schneider/ABB
11.7	Indicating lamps	Vaishno/Binay/Teknic/Siemens/Mimic/C&S

12 INSPECTION AND TESTING

12.1	Type test	Equipment should be of type tested quality only, type test certificate to be submitted along with offer. If the manufacturer's lab is accredited by govt. / authorized body then it shall be acceptable for type testing.
12.2	Acceptance & Routine tests	As per relevant Indian standard

13 PACKING, SHIPPING, HANDLING AND SITE SUPPORT

13.1	Packing Protection	The packing shall be fit to withstand rough handling during transit and storage at destination. The test set should be properly protected against corrosion, dampness & damage.
13.2	Packing for accessories and spares	Robust non-returnable packing case with all the above protection & identification Label. The bidder should get the packing list approved before dispatching the material.
13.3	Packing Identification Label	On each packing case, following details are required:
13.3.1	Individual serial number	
13.3.2	Purchaser's name	
13.3.3	PO number (along with SAP item code, if any) & date	
13.3.4	Equipment Tag no. (if any)	
13.3.5	Destination	
13.3.6	Manufacturer / Supplier's name	
13.3.7	Address of Manufacturer / Supplier / it's agent	
13.3.8	Description	
13.3.9	Country of origin	
13.3.10	Month & year of Manufacturing	
13.3.11	Case measurements	

13.3.12	Gross and net weight	
13.3.13	All necessary slinging and stacking instructions	
13.4	Shipping	The seller shall be responsible for all transit damage due to improper packing.
13.5	Handling and Storage	Manufacturer instruction shall be followed.
13.6	Detail handling & storage instruction sheet / manual to be furnished before commencement of supply.	

14 DEVIATIONS

14.1	Deviation	Deviations from this Specification shall be stated in writing with the tender by reference to the Specification clause/GTP/Drawing and a description of the alternative offer. In absence of such a statement, it will be assumed that the bidder complies fully with this specification. No deviation will be acceptable post order.

15 DOCUMENT SUBMISSION

Drawing submission shall be as per the matrix given below. All documents/ drawing shall be provided on A3/A4 sheet in box file with separators for each section. Also provide USB containing pdf with bid for soft copy. Language of the documents shall be English only. Deficient/ improper document/ drawing submission may liable for rejection

S. No	Head	Bid	Drawing Approval	Pre Dispatch	Pre Closure
15.1	Contact Person Name, Email ID and Mobile Number	Required			
15.2	Deviation Sheet	Required	Required		
15.3	Type Test	Required			
15.4	Any Technological Advancement in DCDB	Required			
15.5	Manufacturer's quality assurance plan and certification for quality standards				
15.6	General Arrangement		Required		
15.7	Door Layout		Required		

15.8	Internal Layout		Required		
15.9	SLD		Required		
15.10	Schematic Circuit diagram		Required		
15.11	Bus Bar Arrangement		Required		
15.12	Cable Alley Arrangement		Required		
15.13	GTP	Required	Required		
15.14	QAP		Required		
15.15	BOQ		Required		
15.16	Foundation diagram		Required		
15.17	TB Detail		Required		
15.18	Name Plate Detail		Required		
15.19	Make of all Component as per specification		Required		
15.20	Inspection Report			Required	
15.21	As manufacturing Drawings			Required	
15.22	Operation and Maintenance Manual			Required	Required
15.23	Trouble shooting manual			Required	Required
15.24	As built Drawings				Required
15.25	Test Report				Required

16 GUARANTEED TECHNICAL PARTICULARS

Vendor must submit clause wise compliance in Excel sheet against specification at the time of drawing approval clearly highlighting the deviations from specification against each clause.

S. No.	Description	Specification requirement	Bidder's Data
16.1	**GENERAL FEATURES**		
16.1.1	Make		
16.1.2	Type		
16.1.3	Reference Standard		

16.1.4	Rated Operational voltage	220 VDC/50 VDC	
16.1.5	Rated Nominal Current	100	
16.1.6	Rated Insulation voltage	1100V	
16.1.7	Rated Impulse withstand voltage	8kV	
16.1.8	Service supply for heating, lighting and power sockets	240VAC±10%	
16.1.9	Mounting	Floor (Free standing)	
16.1.10	Connections	Cable entry – Bottom	
16.1.11	Configuration	Single front	
16.1.12	Enclosure thickness		
a	Load Bearing Member	>=2.5mm	
b	Doors and Covers	>=2 mm	
c	Gland Plate	3 mm	
16.1.13	Enclosure Material	CRCA Sheet	
16.1.14	Enclosure degree of protection	IP 54	
16.1.15	Power Cable Termination	Suitable for 4CX50 Sq.mm Al	
16.1.16	Paint shade	RAL 7032 (Siemens Grey)	
16.1.17	Typical vertical section (Overall dimension (mm) and weight (Kg))	Required	
16.1.18	Incomer		
16.1.19	Outgoings		
16.1.20	Dimensions of the DCDB Panel	500(L)X500(D)X1800(H) mm3	
16.1.21	Weights of the DCDB Panel	(in kg.)	
16.1.22	Marking on the panel	As per the specification	
16.1.23	Cable Alley Width	230 mm	
16.1.24	Cable Gland	Compression Type	

16.1.25	Gasket Material	Neoprene	
16.1.26	Ventilating louvers	Required	
16.1.27	Base Frame	100mm channel	
16.2	**MCB**		
16.2.1	Make	**Datar/Legrand/Hager/Schneider/ABB**	
16.2.2	Incomer	100A/50 A	
16.2.3	Emergency Lighting DB	32A/16 A	
16.2.4	Fire Alarm System	32A/16 A	
16.2.5	SCADA	32A/16 A	
16.2.6	CRP	32A/16 A	
16.2.7	11 kV Switchgear	32A/16 A	
16.2.8	Testing Purpose	32A/16 A	
16.2.9	NIFPS	32A/16 A	
16.2.10	Spare 1	100A/50 A	
16.2.11	Spare 2	32A/16 A	
16.3	**BUS AND BUS TAPS**		
16.3.1	Make		
16.3.2	Material	Tinned electrolytic copper or Aluminum	
16.3.3	Reference standard		
16.3.4	Continuous Current (at site condition, 50°C ambient) within cubicle		
16.3.5	Short Circuit withstand Current for 1 sec	15 KA	
16.3.6	Cross sectional Area		
16.3.7	DC resistance	ohm/m/ph	

16.3.8	Reactance	ohm/m/ph	
16.3.9	Losses-middle phase	w/m/ph	
16.3.10	Minimum clearance of bus bar and joints	Required	
16.3.11	Phase to phase (mm)		
16.3.12	Phase to earth (mm)		
16.3.13	Bus bar insulation	i. Heat shrinkable sleeves rated for maximum operating voltage	
		ii. Cast resin shrouds for joint	
16.3.14	Bus joints	Silver	
16.3.15	Bus bar support insulator	Required	
16.3.16	Spacing (mm)		
16.3.17	Make		
16.3.18	Type		
16.3.19	Reference standard		
16.3.20	Voltage class (kV)		
16.3.21	Minimum creepage distance (mm)		
16.3.22	Cantilever strength (Kg/sq.cm.)		
16.4	**Wiring and Terminals**		
16.4.1	**Wiring**		
a	Grade and type	1100 V grade, PVC insulated, FRLS type stranded flexible copper wire.	
b	Ferruling	Each wire shall bear an identifying ferrule or tag at each end or connecting point.	
c	Spare	20% Spare Wiring	
16.4.2	**Terminals**		
a	Grade	1100 V grade, moulded piece terminals complete with insulated barriers, washers, nuts and lock nuts.	
b	Power Terminals type	Stud type, nut driver operated	
c	Control terminals type	Stud type, screw driver operated	

d	Spare terminals	20% spare	
e	Accessibility	Placement of terminals shall enable proper cable termination. Terminals shall be readily accessible for inspection and maintenance.	
f	Marking	The terminals shall be serially numbered to facilitate installation and maintenance.	
16.5	**METERS, INDICATIONS, PUSH BUTTONS & HEATERS**		
16.5.1	Ammeter	DC Moving coil ammeter of size 96 sq.mm. with external shunt. Rating of Ammeter shall be 0-100A DC.	
a	Model No Ammeter		
b	Make of Ammeter		
16.5.2	Voltmeter	DC Moving coil voltmeter of size 96.sq.mm to read the DC Bus voltage. Rating of Voltmeter shall be 0-300VDC	
a	Model No Voltmeter		
b	Make of Voltmeter	Rishabh/Schneider/AE	
c	Type	Digital type	
16.5.3	Indicating lamps	Cluster LED type.	
a	Make of Indicating lamps	Vaishno/Binay/Teknic/Siemens/Mimic/C &S	
b	Incomer/ Outgoing On	Red	
c	Incomer/ Outgoing Off	Green	
d	Incomer/ Outgoing Trip	Amber	
e	Push buttons Make	L&T/Siemens/Vaishno/Schneider	
16.5.4	Heaters	Cubicle space heater having rating of 100W. Thermostat for space heater shall be provided with temperature range $0\text{-}90^0$	
16.5.5	CFL	Cubicle lamp shall be provided in DCDB having rating of 11 W.	

16.6	**NAME PLATES & MARKINGS**		
a	Panel nameplate	Panel Serial No.-	
b		Customer Name - BSES Yamuna/Rajdhani Power Ltd	
c		PO No. & date -	
d		Type of Panel -	
e		Current rating -	
f		Guarantee period -	
16.6.1	Feeder nameplate	As per Spec	
a	Equipment nameplate	As per Spec	
b	Material	As per Spec	
c	Fixing	As per Spec	
d	Markings	As per Spec	
16.7	**FINISH**		
a	Primer	Two coats	
b	Paint	Two finishing coats of epoxy based paint of Shade RAL 7032 with glossy finish.	
c	Paint thickness	50 microns (minimum)	

BSES

Technical Specification

Of

Nickel Cadmium Battery Bank

Specification no – BSES-TS-312-NICD-R0

Rev:		0
Date:		18 Nov 2025
Prepared by	Amar Deep Singh	
Reviewed by	Uttam Shukla	
Approved by	Deepti Sharma	

Index

1.0 Scope of supply 3
2.0 Codes & standards 3
3.0 DC distribution system data 3
4.0 Battery bank design features 4
5.0 Quality assurance 5
6.0 Inspection & testing 5
7.0 Shipping, Handling and Site support 6
8.0 Deviations 6
9.0 Drawing submission 7
Annexure A Scope of supply 8
Annexure B Technical particulars (Data by purchaser) 9
Annexure C Guaranteed Technical Particulars (Data by Supplier) 10
Annexure D Recommended spares (Data by supplier) 12
Annexure E Typical DC load curve 13

1.0 Scope of supply

1.1) A DC battery set shall connected to a float cum boost charger.
1.2) Each battery bank shall be sized for supplying 100% load for a backup time of 2 hour

2.0 Codes & standards

Materials, equipment and methods used in the manufacture of switchboards shall conform to the latest edition of following -

Indian Electricity Rules	
Indian electricity act	
CBIP manual	
IEC60623	Ni Cd battery
IS10918	Ni Cd battery
IS5	Color of mixed paints
IS13703	Low-voltageFusesforVoltagesNotExceeding1000VAC
IS5578	Guide for Marking of Insulated Conductors

In the event of direct conflict between various order documents, the precedence of authority of documents shall be as follows -

i. Guaranteed Technical Particulars (GTP)
ii. Specification including applicable codes, standards
iii. Approved Vendor Drawings
iv. Other documents

3.0 DC distribution system data

3.1	DC Supply	2 wire,with positive & negative polarity
3.2	Earth reference	Unearthed system
3.3	Voltage	220V / 50V
3.4	Application–Industrial	Standby DC backup for switchgear control Supply & SCADA RTU

4.0 Battery bank design features

4.1	DC battery bank Ahr rating & sizing	As per Annexure B
4.2	DC load curve	As per Annexure E
4.3	Location of battery bank	Indoor
4.4	Mounting of battery bank	On steel rack, painted with anticorrosive paint
4.5	Arrangement	Battery cells connected in series with multi step single tier formation.
4.6.1	Battery Type	Storage type rechargeable wet cell
4.6.2	DC battery electrode type	Fiber plate/pocket plate
4.7	Battery cell	Vented cell closed type
4.8	Venting device	Anti-splash
4.9	Battery cell container	Translucent, prismatic, nonflammable, poly propylene
4.10	Battery cell lifting arrangement	Suitable arrangement on cell
4.11	Electrolyte sampling & servicing	Alkali resistant material cap on cell top
4.12	Battery cell designation	To be marked on cell as per relevant standard
4.13	Battery cell marking	Manufacturer name & type, month & year of manufacture, nominal voltage, rated Ahr capacity & Cell Number
4.14	Battery electrolyte level-minimum& maximum	To be marked on cell container
4.15	Battery cell electrolyte	KOH solution in distilled water
4.16	Electrolyte specific gravity	To be specified by supplier at 27 degC
4.17	Nominal cell voltage	1.2 volt for Ni cd
4.18	Battery terminals	Stud type
4.19	Terminal polarity marking	Positive & negative marked on cell
4.20	Battery cell shorting metal links	Nickel plated copper with protective Insulating sleeve
4.21	Insulating shrouds	For all battery cell terminals & shorting links

4.22	Insulating pads for battery rack	At the bottom of rack supports, made from High impact material
4.23	Battery suitable for Ripple content	5% minimum in DC charger output
4.24	Power terminal with insulator	Bus bar type mounted on rack suitable for 70 sqmm cable
4.25	Cooling	Natural ventilation
4.26.1	Tools & accessories to be supplied With each battery set	Set of insulated spanners
4.26.2		Set of thermometers
4.26.3		Rubber hand gloves / eye protection goggle & specific gravity test kit
4.26.4		Portable DC voltmeter
4.26.5		Funnel with filter
4.26.6		Mug for filling electrolyte
4.26.7		Wall mounted box to keep all accessories

5.0 Quality assurance

5..1	Vendor quality plan	To be submitted for purchaser approval
5.2	Inspection points	To be mutually identified & agreed in quality plan

6.0 Inspection & testing

6.1	Type test	Equipment shall be of type tested quality as per IEC for fiber plate battery & as per IS for Pocket plate battery
		If the manufacturers lab is accredited by govt./authorized body the nit shall be acceptable for type testing
6.2	Routine test	As per relevant standard
6.3	Acceptance test	To be performed in presence of purchaser At manufacturer works
		-Physical in section & BOM, wiring check
		-Insulation resistance test

		-HV test for one minute
		-Charge discharge test
		-Measurement of efficiency & temperature rise for above

7.0 Shipping, Handling and Site support

7.1	Packing Protection	Against corrosion, dampness, heavy rains, Breakage and vibration
7.2	Packing for accessories and spares	Robust wooden nonreturnable packing case with all the above protection & Identification Label
7.3	Packing Identification Label	In each packing case, following details are required:
		i: Individual serial number
		ii: Purchaser's name
		iii: PO number (along with SAP item code, if any) & date
		iv: Equipment Tag no. (if any)
		v: Destination
		vi: Manufacturer/Supplier's name
		vii: Address of Manufacturer/Supplier
		viii: Description and Quantity
		ix: Country of origin
		'x: Month & year of Manufacturing
		xi: Case measurements
		xii: Gross and net weights in kilograms
		xiii: All necessary slinging and stacking instructions
7.4	Shipping	The seller shall be responsible for all transit damage due to improper packing.
7.5	Handling and Storage	Manufacturer instruction shall be followed. Detail handling & storage instruction sheet/ manual needs to be furnished before commencement of supply.

8.0 Deviations

8.1	Deviations from this specification shall be stated in writing with the tender by reference to the Specification clause/GTP/Drawing and a description of the alternative offer. In absence of such a statement, it will be assumed by the Buyer that the Seller complies fully with this specification. Bidder to submit copy of Specification / GTP with company seal & signature on each page.

9.0 Drawing submission

9.1	To be submitted along with bid	The seller has to submit:
		i) GA drawing of battery & battery rack
		ii) Detailed reference list of customers
		iii) Completely filled GTP
		iv) Battery sizing calculation
		v) Manufacturer's quality assurance plan and certification for quality systems
		vi) Type test reports. They shall be considered valid for 5years from date of test performed on product /equipment.
		vii) Complete product catalogue and Manual along with the bid.
		viii) Recommended spare parts and consumable items for five years of operation with prices and spare parts catalogue with price list for future requirements
9.2	After award of contract, seller has to submit mentioned drawings for buyer's	i) Program for production and testing (A)
	Approval(A)/Reference(R)	ii) Guaranteed Technical Particulars(A)
		iii) Battery sizing Calculations
		iv-a) GA drawing
		iv-b) Schematic and wiring drawings
		v) Bill of material
		vi) Installation & commissioning Manual(R)

9.3	Submittals required prior to dispatch	i) Inspection and test reports(R) ii) Test certificates of all bought out items iii) Operation and maintenance Instruction as well as troubleshooting charts/manuals
9.4	Drawing and document sizes	Standard size paper A4
9.5	No of drgs./Documents required at Different stages	As per Annexure-A

Annexure A Scope of supply

1.0 The scope of supply shall include following

1.1 Design, manufacture, testing at manufacturer works before dispatch, packing, delivery and submission of all documentation of the DC Battery set

1.2 Supervision of testing & commissioning of panel at site

1.3 BOQ as following-

Sr No	Purchaser Equipment Tag No/SAP code	Location/Substation name	Unit	Quantity(Battery set)
1		e.g. Santacruz	No	e.g.1
2		e.g. Alaknanda	No	
3				
4				

2.0 Submission of documents-quantity

	Along with offer	For Approval after award of contract	Final after approval
Drawings & GTP	3copies+1softcopy in CD / Pendrive	4copies+1soft Copy in CD / Pendrive	6copies +1 soft copy in CD / Pendrive
Calculations	3copies+1softcopy in CD / Pendrive	4copies+1soft Copy in CD / Pendrive	
Catalogues	1copy+1softcopyin CD / Pendrive		
Instruction manual for the transformer	1copy+1softcopyin CD / Pendrive		
Test Report	2copies+1softcopy in CD / Pendrive		

3.0 Delivery schedule

Delivery period start date - from date of purchase order

Delivery period end date - as per mutual agreement

Material dispatch clearance - after inspection by purchaser

Annexure B Technical particulars (Data by purchaser)

Sr No	Description	Data by purchaser
1	Location of equipment	*e.g.Mumbai/Delhi/Orissa/kerala/ Dahanuetc*
2	Relative humidity	*e.g.95% for Mumbai*
3	DC charger type available	2x100% Float cum boost charger
4	Battery room ventilation	Natural air indoor
5	DC battery set configuration	battery bank shall be connected to 2x100% Float cum boost charger
6	Each DC battery bank rating at 27deg C as per IS (or at 20 deg C as per IEC)	For supplying 100% DC load requirement for 2 hour back up time
7	DC battery bank voltage (i.e. DC load voltage)	
8	DC battery Load (refer annexure E)	
8.1	Load current 'I1' in amp	
8.2	Load current 'I2' in amp	
8.3	Load current 'I3' in amp	
10	Battery floor space available in meter (for2x50%batteryunits)	*Length x width*

Note–letters in *'italic blue'* indicate data to be filled by purchaser

Annexure C Guaranteed Technical Particulars (Data by Supplier)

Sr. No.	Description	Data to be filled by Manufacturer
1	Battery (as per scope of supply annexure A)–Yes/No	
2	Manufacturer battery type	
3	Conformance to design standards as per Specification clause no2.0 – Yes/No	
4	Conformance to design features as per specification clause no 3.0 & 4.0– Yes/No	
5	Submission of deviation sheet for each Specification clause no–Yes/No	
6.1	Battery GA drawing submitted–Yes/No	
6.2	Battery selection/sizing calculation submitted–Yes/No	
7	Battery rating (C5) offered in Ahr	
7.1	Rating at temperature 27 degC as per IS	
7.2	Rating at temperature 20 degC as per IEC	
8.1	Battery rack type offered – steel or FRP	
8.2	Number of steps in a tier	
8.3	Number of tier in rack	
9	Battery bank dimensions in mm (length x Depth x height)	
10	Battery cell weight in kg	
11	Battery cell anode-no. of plates & Thickness in mm	
12	Battery cell cathode-no of plates & Thickness in mm	
13.1	Battery cell nominal voltage	
13.2	Battery cell float charge voltage	
14	Battery cell maximum boost charge voltage	

15	Battery cell end cell voltage	
16	Total battery bank float charging voltage Required in volts	
17.1	Total battery bank boost charging voltage Required in volts	
17.2	Total time required for boost charging From end cell voltage to rated voltage/ capacity	
18	Battery in internal resistance (in Ohms) at Fully charged condition	
19	Heat generated by battery at rated full Load (in Kw)	
20	Electrolyte chemical name	
21	Electrolyte specific gravity at 27 deg C	
22	Recommended topping up frequency (in Weeks or months)	
23	Amount of gas evolution in one full charge Discharge cycle(in litre/Ahr)	
24	Type of separateors used in battery cell	
25	Shelf life period (to retain 90% of energy From full charge condition at 27 degC)	
26	Total battery bank short circuit fault level (in KA)	
27	Battery bank terminal bus bar with Insulating shrouds–Yes/no	

Annexure D Recommended spares (Data by supplier)

List of recommended spares as following–

Sr No	Description of spare part	Unit	Quantity
1		No	
2		No	
3			
4			
5			
6			

Annexure E Typical DC load curve

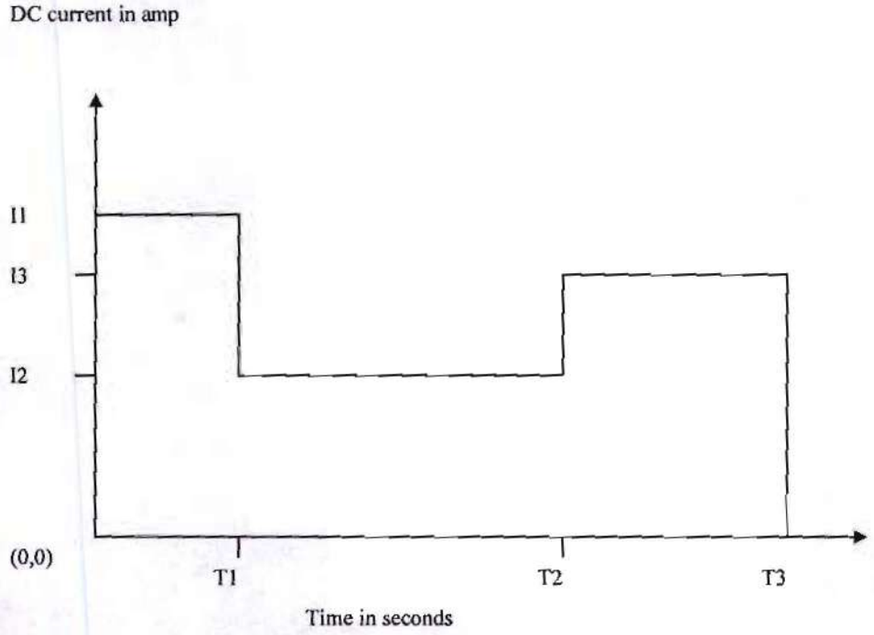

DC Load to be supplied after loss of mains AC supply to float cum boost charger

A. Time T1 = 01 minute (Tripping of all breakers + relay + emergency light + SCADA)

B. Time T2 = 118 minutes (Relay + emergency light + SCADA)

C. Time T3 = 01 minute (closing of all breakers + SCADA + relay + emergency light)

Note -

1) Each battery bank shall be sized for supplying 100% load for a back up time of 2 hour.

BSES

Technical Specification

For

415 V AC Distribution Board

Specification no – BSES-TS-70-ACDB-R0

Rev		0
Page		1 of 17
Date		05 May 2022
Prepared by	Jeena Borana	
	Abhishek Harsh	
	Amar Singh	
Reviewed by	Srinivas Gopu	
	Abhinav Srivastava	
Approved by	Gaurav Sharma	
	Gopal Nariya	

INDEX

1 SCOPE 3
2 STANDARDS & CODES 3
3 SERVICE CONDITIONS 3
4 ACB CONFIGURATION 4
5 CONSTRUCTION 5
6 BUSBAR 7
7 MCCB 7
8 CURRENT TRANSFORMER 8
9 TERMINALS AND WIRING 8
10 METERS, INDICATIONS AND PUSH BUTTONS 9
11 NAME PLATES & MARKINGS 9
12 FINISHING 10
13 APPROVED MAKE OF COMPONENTS 10
14 QUALITY ASSURANCE PLAN, INSPECTION AND TESTING 11
15 PACKING, SHIPPING, HANDLING & SITE SUPPORT 11
16 DEVIATIONS 12
17 DOCUMENT SUBMISSION MATRIX 12
ANNEXURE A GUARANTEED TECHNICAL PARTICULARS 14

1 SCOPE

This specification covers the design, engineering, manufacture, assembly and testing at manufacturer's works and supply of 415V AC Distribution board (ACDB)along with all hardware and accessories required for installation and operation.
Specification covers Type 1 and Type 2 ACDB. Type 1 ACDB is for Grid Substations while Type 2 ACDB is for BSES HT Customers.

2 STANDARDS & CODES

2.1	IS:8623	Specification for factory built assemblies of switchgear & control gear for voltages up to and including 1000V AC/1200 V DC.
2.2	IS 60947-1	Specification for Low-voltage Switchgear and Control gear - Part 2 : Circuit Breakers
2.3	IS:10118	Code of practice for selection, installation and maintenance switchgear and controlgear
2.4	IS:2705	Current Transformers
2.5	IS:3231	Electrical relays for power system protection
2.6	IS:1248	Electrical Indicating instruments
2.7	IS:4794	Switches and push buttons
2.8	IS:6005	Code of practice of phosphating iron and steel
2.9	IS:5082	Wrought Aluminum and aluminum alloys for electrical purposes
2.10	IS 3043	Code of practice for Earthing

3 SERVICE CONDITIONS

3.1	System Configuration	3 Phase 4 Wire with neutral solidly grounded
3.2	Supply Voltage	415 volt +/- 10%
3.3	Supply frequency	50Hz
3.4	Location	Indoor
3.5	Average grade atmosphere	Heavily polluted, Dry
3.6	Maximum altitude above sea level	1000M
3.7	Ambient air temperature	Highest 50Deg C Average 40Deg C
3.8	Minimum ambient air temperature	0 Deg C
3.9	Relative Humidity	100%
3.10	Rainfall	750mm concentrated in four months

4 ACB CONFIGURATION

4.1 TYPE 1 ACDB CONFIGURATION

4.1.1	Incomers	a. Two incomers, each having Motorized 630A MCCB. MCCBs shall have microprocessor based over current and earth fault release. b. Auto changeover shall be provided between the two incomers c. Manual castle keyinterlock required between two incomers d. Castle key for Local /Remote operation			
4.1.2	Outgoing feeders	a. The number of outgoing feeders from AC boards shall be such that each substation equipment is fed by separate feeder (refer below). b. Utilization category of MCBs shall be C.			
	Application	**Type of Switchgear**	**No of Poles**	**Rating (A)**	**Quantity**
4.1.3	Transformer Oil filtration	MCB	4	200	2
4.1.4	Welding(Outdoor)	MCB	2	63	4
4.1.5	Power Socket(Indoor)	MCB	4	32	5
4.1.6	Outdoor Lighting	MCB	4	32	2
4.1.7	Indoor Lighting	MCB	4	32	2
4.1.8	Battery Charger	MCB	4	63	2
4.1.9	BMK	MCB	4	32	8
4.1.10	Marshalling Box(PTR)	MCB	4	32	3
4.1.11	AC Supply	MCB	4	32	2
4.1.12	UPS	MCB	2	16	1
4.1.13	11kV Switchgear	MCB	2	32	3
4.1.14	CRP	MCB	2	32	2
4.1.15	RTU/SCADA	MCB	2	16	2
4.1.16	Fire Fighting	MCB	2	16	2
4.1.17	EPAX	MCB	2	16	1

4.1.18	Power Socket (Outdoor)	MCB	2	16	4

4.2 TYPE 2 ACDB CONFIGURATION

4.2.1	Incomers	a. Two incomers, each having Motorized 400 A MCCB. b. Auto changeover shall be provided between the two incomers c. Manual castle key interlock required between two incomers d. Castle key for Local /Remote operation			
4.2.2	Outgoing feeders	a. The number of outgoing feeders from AC boards shall be such that each substation equipment is fed by separate feeder (refer below). b. Utilization category of MCBs shall be C.			
	Application	**Type of Switchgear**	**No of Poles**	**Rating (A)**	**Quantity**
4.2.3	Welding	MCB	2	63	1
4.2.4	Power Socket	MCB	4	32	3
4.2.5	Outdoor Lighting	MCB	4	16	2
4.2.6	Indoor Lighting	MCB	4	16	2
4.2.7	Battery Charger	MCB	4	32	2
4.2.8	AC Supply	MCB	4	32	2
4.2.9	Switchgear	MCB	2	32	2
4.2.10	RTU/SCADA	MCB	2	16	2
4.2.11	Fire Fighting	MCB	2	16	2

5 CONSTRUCTION

5.1	General construction	a. Board shall be of modular construction with provision for compartmentalization for Incomer and non-compartmentalization for outgoing feeders. b. It shall be free-standing type comprising dust-tight and vermin-proof sheet steel cabinets suitable for indoor installation with IP-54 degree of protection. c. Necessary busbar support insulators, cable glands, cable supports and terminal blocks etc. The board shall be of single front type.

5.2	Material	The Board shall be made out of at least 2.5 mm thickcoldrolled steel sheet (CRCA), suitably reinforced to provide flat level surfaces. No welds, rivets, hinges or bolts shall be visible from outside.
5.3	Equipment Mounting	a) All switches provided on the distribution board shall be on front side of the cabinets, operable from outside. b) All MCBs shall be flush mounted operable from front side of ACDB. c) All instruments and control devices shall be mounted on the front of cabinets and fully wired to the terminal blocks.
5.4	Operating Height	$\leq$ 1.6 meter
5.5	Busbar housing	a) The busbars shall be housed in totally enclosed busbar chambers. b) Incoming connections from the busbar to various feeders shall be designed so as not to disturb cable connections. c) Busbar arrangement should ensure safety of the operation/maintenance personnel and facilitate working on any outgoing module without the need for switching off in-feed to the adjacent modules, as far as possible
5.6	Outgoing Cable Termination	For Outgoing cable termination, vertical arrangement of Terminal Blocks shall be provided with ratings in descending order.
5.7	Cable glands	Compression type cable glands shall be provided to hold the cables to avoid any pressure or tension on the terminal block connections.
5.8	Gland Plate	Gland plate shall be 3.0mm thickwith metallic knockout punches
5.9	Doors	a) The doors of cable cabinets shall be lockablehinged type b) Doors shall be fitted with double lipped gaskets. c) Bus bar side shall have bolted doors.
5.10	Drawing Pocket	Shall be Provided to keep “As Built Drawings”

6 BUSBAR

6.1	Material	Busbar shall be of aluminum.
6.2	Size (phase and neutral)	a) Main busbar - 80x10 sqmm for Type 1 ACDB b) Main busbar – 50X10 sqmm for Type 2 ACDB c) Busbar dropper size Incomers - MCCB-80x10 sqmm for Type 1 ACDB d) Busbar dropper size Incomers - MCCB-50x10 sqmm for Type 2 ACDB
6.3	Supports	The busbar shall be supported by means of durable non-hygroscopic, non-combustible and non-tracking polyester fiberglass material or porcelain. Supports shall be capable of withstanding the maximum short circuit stresses
6.4	Sleeves and shrouds	Busbars shall be encased in heat-shrinkable sleeves of insulating material which shall be suitable for the operating temperature of busbars during normal service. The busbar joints shall be provided with removable thermosetting plastic shrouds.

7 MCCB

7.1	MCCB type	4 pole
7.2	MCCB design ambient temperature	50deg C
7.3	MCCB Housing	Thermoplastic material resistant to fire & abnormal heat , non hygroscopic
7.4	MCCB Terminal	Silver coated copper with phase barriers, spreader terminals & shrouds
7.5	De-rating at 50Deg ambient temperature	No derarting (0%)
7.6	MCCB rated 3 phase short circuit breaking capacity Ics = Icu	36kA minimum at 415v and 50Hz
7.7	MCCB rated 3 phase short circuit withstand capacity, Icw	8kA for 1sec
7.8	MCCB SC making current capacity	75kA peak
7.9	MCCB rated insulation level	1000V
7.10	MCCB mechanical & electrical endurance	As per IS 13947 / IEC
7.11	MCCB utilization category	B as per IS / IEC 947
7.12	MCCB indications	ON, OFF & TRIP
7.13	MCCB protection	MCCBs shall have microprocessor based over current and earth fault release.

7.14	Tripping characteristic required	
7.14.1	Overload setting	Range 60-100%In (Set on 95%)
7.14.2	Short Circuit setting	Range 200-1200%In (Set on 300%)
7.14.3	Earth fault setting	To be provided
7.15	MCCB Clearances in air	As per table XIII of IS 13947-1
7.16	MCCB temperature rise limits	As per table 2 & 3 of IS 13947-1
7.17	MCCB Ingress Protection	IP2X Minimum (pollution degree minimum 2)
7.18	MCCB additional features	Sealing/padlocking of operating knob in OFF position Sealing/padlocking of operating knob in OFF position isolation suitable with positive contact

8 CURRENT TRANSFORMER

8.1	Type	Cast-resin type, Class-E insulation, rated for 120% current continuous
8.2	Provision	Shall be provided in incomer for metering. Separate Neutral CT shall be connected in the neutral for detecting earth fault for both the incomer.
8.3	Secondary current	5A
8.4	Metering CT Class	1.0
8.5	Burden	Based on requirement

9 TERMINALS AND WIRING

9.1	Secondary Wiring	
9.1.1	Grade and type	1100 V grade, PVC insulated, FRLS type stranded flexible copper wire.
9.1.2	Ferruling	Each wire shall bear an identifying ferrule or tag at each end or connecting point.
9.1.3	Size	Appropriate size copper based on rated current and application subject to a minimum of 2.5sqmm copper
9.2	Terminals	Terminals of appropriate size shall be provided inside each cabinet for incoming and outgoing cables.
9.2.1	Grade	1100 V grade, molded piece terminals complete with insulated barriers, washers, nuts and lock nuts.
9.2.2	Power Terminals type	Stud type, nut driver operated

9.2.3	Control terminals type	Stud type, screw driver operated suitable for minimum 6sqmm wire.
9.2.4	Spare terminals	20% spare terminals should be provided in each terminal block.
9.2.5	Accessibility	Placement of terminals shall enable proper cable termination. Terminals shall be readily accessible for inspection and maintenance.
9.2.6	Marking	The terminals shall be serially numbered to facilitate installation and maintenance.
9.3	Cable troughs	Shall be provided for wiring of each terminal block with 50% spare capacity

10 METERS, INDICATIONS AND PUSH BUTTONS

10.1	Meters	
10.1.1	Multifunction Meter	For incomer feeders. Meter should have facility to store peak load current in memory.
10.1.2	Type	Digital with inbuilt phase selector
10.1.3	Communication Protocol	RS485 on MODBUS
10.1.4	Accuracy Class	1.0
10.1.5	Auxiliary supply	240VAC with 10% tolerance
10.2	Indicating lamps	Indicating lamps shall be of low wattage cluster LED type.
10.2.1	Incomer/ Outgoing On	Red
10.2.2	Incomer/ Outgoing Off	Green
10.2.3	Incomer/ Outgoing Trip	Amber
10.3	Push buttons	For manual operation of incomer

11 NAME PLATES & MARKINGS

11.1	Panel nameplate	Panel shall have a nameplate clearly indicating the following: a) Manufacturer's Name & Country: b) Panel Serial No.: c) Customer Name: BSES Yamuna / Rajdhani Power Ltd d) PO No. & date: e) Type of Panel: f) Current rating: g) Rated Voltage and Frequency: h) Month and year or Manufacture: MM/YYYY i) Guarantee period:
11.2	Feeder nameplate	Large and bold name plate carrying the feeder identification

		shall be provided on the top of each module. Blank insert type name plates shall be provided on each outgoing feeder.
11.3	Equipment nameplate	a) All equipment mounted on front side as well as equipment mounted inside the panels shall be provided with individual name plates with equipment designation engraved. b) All front mounted equipment shall also be provided at the rear with individual name plates engraved with tag numbers corresponding to the one shown in the panel internal wiring to facilitate easy tracing of the wiring.
11.4	Danger plate	Panel shall have a danger plate of anodized aluminum clearly indicating the danger logo and voltage details.
11.5	Material	Non-rusting metal or 3 ply lamicoid. Nameplates shall be black with white engraving lettering. Stickers are not allowed.
11.6	Fixing	All nameplates/rating plates shall be riveted to the panels at all four corners. Bolting/screwing is not acceptable.
11.7	Markings	Each switch shall bear clear inscription identifying its function. Similar inscription shall also be provided on each device whose function is not otherwise identified. If any switch or device does not bear this inscription separate nameplate giving its function shall be provided for it. Switch shall also have clear inscription for each position indicating e.g. Trip-Neutral close, ON-OFF etc.

12 FINISHING

12.1	Primer	Two coats
12.2	Finish	Powder Coating
12.3	Colour shade	RAL 7032 (Siemens Grey)
12.4	Paint thickness	70 microns (minimum)

13 APPROVED MAKE OF COMPONENTS

13.1	Switch	Siemens / L&T (Salzer)
13.2	HRC Fuse Links	GE/ Siemens/ L&T
13.3	Meters	Rishabh/Schneider/AE
13.4	AC Contractors	L&T/Siemens/Telemechanique/GE/ABB
13.5	Terminals	Connectwell/Elmex/Wago/Phoenix
13.6	Push buttons / Actuator	L&T/Siemens/Vaishno/Schneider
13.7	MCCB	L&T/Siemens/ ABB/GE/Schneider
13.8	MCB	Datar/Legrand/Hager/Schneider/ABB
13.9	Indicating lamps	Vaishno/Binay/Teknic/Siemens/Mimic/C&S

14 QUALITY ASSURANCE PLAN, INSPECTION AND TESTING

S No.	Parameters	Technical Requirements
14.1	Quality Assurance Plan	QAP Shall be submitted by vendor for approval. Inspection and testing of the material shall be carried out accordingly.
14.2	Type test	Equipment should be of type tested quality only, type test certificate to be submitted along with offer. Test reports from CPRI/ERDA accredited laboratory only acceptable.
14.3	Routine /Acceptance test	As per relevant Indian standard
14.4	Inspection	a) The buyer reserves the right to inspect equipment at the Seller's works at any time prior dispatch, to verify compliance with the specifications. b) In-process and final inspection call intimation shall be given in 15 days advance to purchaser. c) In the event of any discrepancy in the test reports i.e. test reports not acceptable or any type tests (including special /additional tests, if any) not carried out, same shall be carried out without any cost implication to BSES before dispatch of equipment.
14.5	Test certificates	Test certificates (routine and acceptance) shall be submitted along with the dispatch documents.

15 PACKING, SHIPPING, HANDLING & SITE SUPPORT

15.1	Packing Protection	The packing shall be fit to withstand rough handling during transit and storage at destination. The test set should be properly protected against corrosion, dampness & damage.
15.2	Packing for accessories and spares	Robust non-returnable packing case with all the above protection & identification Label. The bidder should get the packing list approved before dispatching the material.
15.3	Packing Identification Label	On each packing case, following details are required: a) Individual serial number b) Purchaser's name c) PO number (along with SAP item code, if any) & date d) Equipment Tag no. (if any) e) Destination f) Manufacturer / Supplier's name g) Address of Manufacturer / Supplier / it's agent h) Description i) Country of origin j) Month & year of Manufacturing

		k) Case measurements l) Gross and net weight m) All necessary slinging and stacking instructions
15.4	Shipping	The seller shall be responsible for all transit damage due to improper packing.
15.5	Handling and Storage	Manufacturer instruction shall be followed.
15.6	Detail handling & storage instruction sheet / manual to be furnished before commencement of supply.	

16 DEVIATIONS

16.1	Deviation	Deviations from this Specification shall be stated in writing with the tender by reference to the Specification clause/GTP/Drawing and a description of the alternative offer. In absence of such a statement, it will be assumed that the bidder complies fully with this specification. No deviation will be acceptable post order.

17 DOCUMENT SUBMISSION MATRIX

Drawing submission shall be as per the matrix given below.

- All documents/ drawing shall be provided in soft copy only through mail.
- Language of the documents shall be English only.
- Incomplete submission shall be liable for rejection.
- Document check sheet compliance shall be the first sheet for each submission stage i.e.Technical bid, Drawing Approval, Pre Dispatch
- No submission is acceptable without check list compliance.
- Order of documents shall be strictly as per the check list.
- Any drawing not included in the below table but necessary for detailed engineering shall be deemed to be included in bidder's scope.

S No.	Documents to be submitted	Bid	Approval	Pre Dispatch
17.1	Guaranteed Technical Particulars (GTP)	Required	Required	
17.2	Deviation Sheet, if any	Required	Required	
17.3	GA drawing, SLD, Wiring Diagram	Required	Required	

S No.	Documents to be submitted	Bid	Approval	Pre Dispatch
17.4	Type test reports(not more than 5 years old) from CPRI/ERDA	Required	Required	
17.5	Reference List of major customers using the offered product from last 5 years	Required		
17.6	Performance certificates executed in last 5 years			
17.7	Make of Raw Materials	Required	Required	
17.8	Manufacturer's Quality Assurance Plan		Required	
17.9	Complete product catalogue and Manual		Required	Required
17.10	Test certificates of all raw materials			Required
17.11	Inspection and routine test reports, carried out in manufacturer's works			Required

ANNEXURE AGUARANTEED TECHNICAL PARTICULARS

S. No.	Description	Specification requirement	Vendor Data
1.0	**GENERAL FEATURES**		
1.1	Make		
1.2	Type		
1.3	Reference Standard		
1.4	Rated Operational voltage	415V AC ± 10%	
1.5	Rated Nominal Current	630A	
1.6	Rated frequency	50 Hz (+3%, -5%)	
1.7	Rated Insulation voltage	1100V	
1.8	Rated Impulse withstand voltage	8kV	
1.9	Service supply for heating, lighting and power sockets	240VAC±10%,	
1.10	Mounting	Floor (Free standing)	
1.11	Connections	Cable entry – Bottom	
1.12	Configuration	Single front	
1.13	Enclosure thickness		
1.13.1	Load Bearing Member	>=2.5mm	
1.13.2	Doors and Covers	>=2 mm	
1.14	Enclosure Material	CRCA Sheet/GI	
1.15	Enclosure degree of protection	IP 54	
1.16	Mechanical safety interlocks	As specified in technical specification	
1.17	Incomer Power Cable Termination	2Rx4Cx300sqmm	
	Outgoing Cable Termination	a) 200A MCB- 4Cx150sqmm b) 63A MCB- 4Cx50sqmm c) 32A MCB- 4Cx25 sqmm d) 16A MCB- 2Cx10 sqmm	
	Cable Termination Type	From Bottom of Panel	
	Clearance	150 mm clearance to be maintained from the bottom of the TB and the gland plate	
1.18	Paint shade	RAL 7032 (Siemens Grey)	
1.19	Typical vertical section (Overall dimension (mm) and weight (Kg))	Required	
1.19.1	Incomer		
1.19.2	Outgoings		
1.20	Dimensions of the ACDB Panel	L (mm) X D (mm) X H (mm)	

S. No.	Description	Specification requirement	Vendor Data
1.21	Weights of the ACDB Panel	(in kg.)	
1.22	Marking on the panel	As per the specification	
2.0	**INCOMER MCCB**		
2.1	Make & Model of MCCB	Required	
2.2	Catalogue of MCCB	Required	
2.3	Continuous Current at 40 deg C/ 50 deg C	630A	
2.4	Rated ultimate breaking capacity at rated voltage	50kA	
2.5	Rated service breaking capacity Ics	Ics = 100% Icu at rated voltage	
2.6	Rated making current	Icm = 220% Icu	
2.7	Utilization Category	A	
2.8	Overload setting	50 -100% (Inverse time characteristics)	
2.9	Overcurrent setting	200-1000% (Instantaneous characteristics)	
2.10	Earthfault setting	20-100% (Instantaneous)	
2.11	Dimension(HxWxD)	Required	
2.12	Weight	Required	
3.0	**BUS AND BUS TAPS**		
3.1	Make		
3.2	Material and grade of buses and joints	High conductivity electrolytic grade aluminum	
3.3	Reference standard		
3.4	Continuous Current (at site condition, 50°C ambient) within cubicle	630A	
3.5	Cross sectional Area		
3.6	DC resistance	ohm/m/ph	
3.7	Skin-effect ratio		
3.8	Reactance	ohm/m/ph	
3.9	Losses-middle phase	w/m/ph	
3.10	Minimum clearance of bus bar and joints	Required	
3.10.1	Phase to phase (mm)		
3.10.2	Phase to earth (mm)		
3.11	Bus bar insulation	a. Heat shrinkable sleeves rated for maximum operating voltage b. Cast resin shrouds for joint	

S. No.	Description	Specification requirement	Vendor Data
3.12	Bus joints	Silver	
3.13	Bus bar support insulator	Required	
3.13.1	Spacing (mm)		
3.13.2	Make		
3.13.3	Type		
3.13.4	Reference standard		
3.13.5	Voltage class (kV)		
3.13.6	Minimum creepage distance (mm)		
3.13.7	Cantilever strength (Kg/sq.cm.)		
4.0	**CURRENT TRANSFORMER**		
4.1	Make		
4.2	Type	Resin Cast	
4.3	Reference standard		
4.4	CT ratios		
4.5	Class of Insulation	Class-E	
4.6	Protection class	5P20	
4.7	Metering class	5	
4.8	VA burden for Relaying CT-Incomer	Based on requirement.	
5.0	**AMMETERS/MULTIFUNCTION METERS AND VOLTMETERS**		
5.1	Make & Model no.		
5.2	Type	Digitalwith inbuilt phase selector	
5.3	Communication Protocol	RS485 on MODBUS	
5.4	Accuracy class	1	
6.0	**CONTROL & INDICATIONS**		
6.1	Push button		
6.1.1	Make and model no.		
6.1.2	Type	Flush mounted type with touch proof terminals	
6.2	LEDs		
6.2.1	Make & Model no.		
6.2.2	Type	Flush mounted type with touch proof terminals	
7.0	**TERMINAL BLOCKS**		
7.1	Make & Model no.		
7.2	Spare terminals	Equal to 20% of active terminals in each TB	
7.3	Power terminals	Stud type, screw driver operated	

S. No.	Description	Specification requirement	Vendor Data
7.4	Control terminals	Stud type, screw driver operated suitable for minimum 6sqmm wire.	
8.0	**TESTS**		
8.1	Confirmation of routine tests to be performed as per IS 60947	Yes/No	
8.2	IP 55 test shall be carried out during inspection	Yes/No	
8.3	Confirmation of Type tests to be performed (or report submitted) as per IS 60947	Type test report no./date	
8.4	Confirmation of Acceptance tests to be performed during inspectionas per IS 60947	Yes/No	
8.5	Temperature rise test to be carried out at NABL accredited lab.	Yes/No	
9.0	Deviation sheet against each clause of the specification	To be submitted	

BSES

Technical Specification

For

Grounding and Lightening Protection System

Specification no – BSES-TS-76-GES-R2

Rev:		2
Date:		23 September 2025
Prepared by	Supriya Raina	
Reviewed by	Uttam Shukla	
Approved by	Deepti Sharma	

INDEX TABLE

INDEX TABLE

1. SCOPE 3
2. STANDARDS & CODES 3
3. REQUIREMENT OF EARTHING 3
4. SPECIFICATION OF EARTHING MATERIALS 6
5. SIZES OF THE EARTHING MATERIALSFOR EQUIPMENT EARTHING 7
6. TESTING AND INSPECTION 9
7. DEVIATIONS 9
8. DOCUMENTS SUBMISSION 9
9. GUARANTEED TECHNICAL PARTICULARS 10
ANNEXURE A1 : REFERENCE FAULT LEVEL 11

1. SCOPE

This specification covers the guidelines of earthing & lightening protection at 66/11, 33/11, 66/33/11 kV Grid substation and the technical requirements of material required for earthing system.

2. STANDARDS & CODES

2.1.	CEA guidelines	Technical standards for construction of electrical plants and electrical lines
2.2.		IE Rules of 1956
2.3.	IEEE Std 80	IEEE guide for safety in AC substation grounding
2.4.	CBIP :2006 – publication no. 229	Manual on substation layout
2.5.	IS 3043: 1987	Code of practice for earthing
2.6.	IS 2309 (1989)	Code of practice for the protection of buildings and allied structures against lightning [ETD 20: Electrical Installation]
2.7.	IS 2629 (1985)	Recommended practice for hot dip galvanizing of Iron & Steel
2.8.	IS 2633 (1986)	Method for testing uniformity of coating on zinc coated article
2.9.	IS 5358 (1969)	Specification for hot dip galvanized coating on fasteners
2.10.	IS 4759 (1996)	Specification of Hot dip zinc coatings on structural steel and other allied products
2.11.	IS 1239 (2004)	Steel tubes, tubular and other wrought steel fittings- specification
2.12.	IEC 62561-2	Requirements for conductors and earth electrodes
2.13.	IEC 62561-7	Requirements for earthing enhancing compounds
2.14.		Handbook on Electrical Earthing (Ministry of Railways)

3. REQUIREMENT OF EARTHING

3.1.	Primary guidelines	Following are primary guidelines for a good earthing system in a Grid substation: a. The impedance to ground should be as low as possible. In general it should not exceed **0.5ohm**. b. The step and touch potentials shall be within safe limits. c. The contractor shall do the calculation for number of earthing rods being used in a substation for achieving the desired earth resistance.

3.2.	Design Parameters	Earthing Calculation parameters shall be taken as: 1) Duration of shock current ts=1sec. 2) Top Gravel resistivity shall be 3000 Ohm Meter. 3) Split/ Diversion Factor shall be considered as 1 4) Earth conductor/ electrodes size calculation based upon corrosion considered for next 40 years. 5) The final diameter of earth conductors/rod shall be of calculated dia or 40 mm min; whichever is maximum (prescribed in clause 5)
3.3.	Earthing lead size	a. The actual size of earthing lead will depend on the maximum fault current which the earthing lead will be required to carry safely. b. Please refer **AnnexureA1** for HT fault level.
3.4.	Earthing type	a. Rod earthing shall be provided for the Grid substation. b. The size of the rod depends upon the current to be carried and the type of the soil. Soil resistivity testing will be carried out by vendor. c. The Earth Electrode should be embedded vertically. Wherever hard rock is encountered, the rod can be inclined at an angle of about 30deg to the horizontal as per clause 9.2.2 of IS 3043. d. The vertically driven rods shall be interconnected with each other using horizontal grid conductors.
3.5.	Earth Pit	a. As per clause 20.5.2 of IS 3043, the minimum distance between the vertical earth electrodes shall not be less than the length of rod. b. Minimum of 1m distance of earth pit from electrical equipment and structures shall be maintained. c. The earth pits shall be backfilled with earth enhancing material as per Drawing . d. Treated Earth pits shall be used where earth resistance value is getting over the prescribed value in specification i.e. 0.5 ohms. e. Treated Pipe earthing required for 2 nos. each for PTR & Station TRF neutral and RTU/ SCADA. f. 50% quantity of the total earth electrodes to be provided with earth enhancing material (Terec++/ marconite).
3.6.	Horizontal Conductor	a. The entire earth rod driven in ground vertically shall be interconnected with earth grid conductors horizontally under the ground. b. The Horizontal conductors shall be laid 600mm below FGL c. Minimum earth coverage of 300 mm shall be provided between the Horizontal conductor and the bottom of trench/foundation/underground pipe at the crossing. d. Horizontal conductors around a building /switchyard fence shall be buried outside the boundary at a minimum distance of 2000 mm. e. Risers shall be provided 300mm above the ground level for equipment earthing. Two number treated earth pits shall be provided with riser for connection of transformer neutral. f. Welding between rods to flat, flat to flat should be arc welding type.For rust protection the welds should be treated with red lead compound and afterwards thickly coated with bitumen compound. g. Wherever bolted connection is done, it shall be done through two bolts at each joint to ensure tightness and avoid loosening with passage of time.

		h. Where a 66 kV overhead line terminates at the substation, a metallic continuity between the end tower and the substation earth grid should be established with two independent connections. i. To ensure good welding, it should be carried out only after scratching off the galvanization, dirt, grease etc by thorough cleaning of contact surface. After welding it will be made with anticorrosive zinc rich paint.
3.7.	Equipment earthing	a. GI strips shall be used for the equipment earthing. b. Two separate and distinct earth connections shall be provided for earthing of electrical frameworks. c. The connection of GI strip with riser of earth mat shall be electric arc welding arrangement; connection of equipment with earthing end shall be double bolted arrangement. d. The transformer neutral shall be earthed with two independent grounding conductors connected to two separate earth pits. e. Fence within the earth grid shall be bonded to the plant earth system at regular interval not exceeding 10 meters. Fence gate shall be separately earthed with flexible Copper braid to permit movement. f. Bolted connection shall be made only for earthing of equipment/devices and for some removable structures. The contact surfaces shall be thoroughly cleaned before connection to ensure good electrical contact. g. Cable armor shall be earthed at both ends for multi core cables. For single core cables, the earthing shall be at switchgear end only. h. For prefabricated cable trays, a separate ground conductor shall run along the entire length of cable tray and shall be suitably clamped on each cable tray at periodic intervals. Each continuous laid out lengths of cable tray shall be earthed at minimum two places by GS flats to Owner's earthing system, the distance between earthing points shall not exceed 30 metre. Wherever earthmat is not available Contractor shall do the necessary connections by driving an earth electrode in the ground. i. Earthing conductor's crossings the road shall be installed at 1000 mm depth and where adequate earth coverage is not provided it shall be installed in Hume pipes. Earthing conductors embedded in the concrete floor of the building shall have approximately 50mm concrete cover. j. Metallic stairs and hand rails shall be earthed as for columns. Additionally a 50x6 GI flat shall run the entire length of the stairs. The GI flat shall be welded to the stairs and hand rails at intervals of 1500 mm. k. The main earth conductor shall be securely fixed to the columns /walls/trays by welding /clamping at the intervals not exceeding 1500 mm. The earth conductors shall be interconnected between them and to the main earth grid through risers. l. **In case of GIS substation, earthing rods to be considered in RCC floor as per GIS OEM recommendation.**
3.8.	Lightening protection	a. Direct stroke lightning protection (DSLP) shall be provided in the EHV switchyard by shield wires/ High mast spike gaurd. The final arrangement shall be decided after approval of the DSLP

		calculations. The Contractor is required to carry out the DSLP calculations and submit the same to the Owner for approval of the same at detailed engineering stage after award of contract. b. DSLP protection shall be provided for control room building as per design calculation following Indian standards and level of protection shall be "level 1" and size of the strip shall be as per relevant IS/relevant document. c. Connection between each down conductor & Test link shall be located approximately 2000mm above ground Level. d. Separate earth electrodes shall be provided for building DSLP connecting the down conductors to the risers & finally to the Earthmesh. Minimum electrodes to be provided – 4 Nos.

4. SPECIFICATION OF EARTHING MATERIALS

4.1.	GI earthing strip	a. Fully galvanized iron strips shall be used conforming to IS 2629. b. The zinc deposition shall not be less than 610gm/sqm of the galvanized surface area of the MS Earthing strips. c. The zinc coating used for the galvanization shall be of 9.99 % purity grade as per IS 209. d. All the galvanized material shall be checked for uniformity and weight as per IS. e. The standard length of galvanized iron earthing strip shall be minimum 7Mtrs.
4.2.	Vertical and Horizontal Earth Electrode	a. Ground electrode shall be 3 m long MS rod of required size complying with Zinc coating and earth enhancement compound as per IEC 62561-7. b. Rod shall be tested and certified from CPRI/ERDA for a short circuit current withstanding of desired value. c. There shall be following marking on the rod-Dimension Detail, product model no, Reference number of certification. d. It shall have high corrosion resistance and shall eliminate electrolytic action.

5. SIZES OF THE EARTHING MATERIALSFOR EQUIPMENT EARTHING

S.No.	Title	Material	Sizes of the earthing	Type	UOM	No of Lead
A	**Main Earthing Grid**					
5.1	Vertical Rods	MS rod	40	Rod	mm (dia)	
5.2	Above Ground risers	GI	50x10	Flat	Sqmm	2
5.3	Horizontal Rods	MS rod	40	Rod	mm (dia)	
5.4	Treated Earth Pit	MS rod	40	Rod	mm (dia)	
B	**Power Transformers**					
5.5	Frame	GI	75X10	Flat	Sqmm	2
5.6	Marshalling Box	GI	50X6	Flat	Sqmm	2
5.7	Radiator	GI	50X6	Flat	Sqmm	2
5.8	Neutral	GI	75X10	Flat	Sqmm	2
5.9	Fan	GI		As per sizes mentioned for fans		
B	**Capacitor Bank**					
5.10	Capacitor Bank Structure	GI	50X6	Flat	Sqmm	2
5.11	Capacitor unit and reactors	GI	50X6	Flat	Sqmm	2
B	**Outdoor equipments**					
5.12	Outdoor Circuit breaker, CT, PT & CVT	GI	50X6	Flat	Sqmm	2
5.13	Secondary terminal Box of outdoor CT, PT & CVT	GI	50X6	Flat	Sqmm	2
5.14	Isolator Mechanism box, earth switch box	GI	50X6	Flat	Sqmm	2
5.15	Gantry tower and structure	GI	75X10	Flat	Sqmm	2
5.16	Earthing Strip along with Cable	GI	50X6	Flat	Sqmm	2

	Tray					
5.17	Electronic Earthing	Separate design and installation for all communication devices and electronic equipments including SCADA RTU, MOXA, Router/Switch. As per recommendation of SCADA vendor				
C	**11 KV System**					
5.18	11 KV Swithcgear	GI	50X6	Flat	Sqmm	2
5.19	11 KV Bus Duct	GI	50X6	Flat	Sqmm	2
5.20	11 KV Cable Box	GI	50X6	Flat	Sqmm	2
D	**415 V System**					
5.21	ACDB	GI	50X6	Flat	Sqmm	2
5.22	Station Trafo Frame	GI	50X6	Flat	Sqmm	2
E	**DC System**					
5.23	Battery Charger	GI	50X6	Flat	Sqmm	2
5.24	DCDB	GI	50X6	Flat	Sqmm	2
F	**Other Electrical Items**					
5.25	Three phase receptacles, welding outlet	GI	50x6	Flat	Sqmm	1
5.26	C&R Panel	GI	50X6	Flat	Sqmm	2
5.27	Push Button	GI	8	Wire	Swg	1
5.28	Cable Trays(one run along the tray section)	GI	50X6	Flat	Sqmm	2
6	**Other Non Electrical Items**					
5.29	Railway Tracks	GI	50x6	Flat	Sqmm	At suitable Points
5.30	Metallic noncurrent carrying structures like stair case	GI	50x6	Flat	Sqmm	1
5.31	Columns, Structures	GI	50X6	Flat	Sqmm	2

5.32	Steel pipe racks	GI	50x6	Flat	Sqmm	1
5.33	Fence/Gate	GI	50X6	Flat	Sqmm	As per clause 3.7 (e)
5.34	Hand Rail	GI	8	Wire	Swg	1

6. TESTING AND INSPECTION

6.1.	Earthing materials	a. The purchaser reserves the right to inspect the material at the time of tests. All tests shall be performed in the presence of BYPL/BRPL representative. The bidder shall give intimation in advance to witness the test. b. Acceptance test for GI earthing strips – Tests for Visual examination, dimensional verification and galvanization shall be witnessed at the time of inspection. c. Acceptance test of Earth enhancement compound – Tests for leaching, sulphur determination, corrosion and resistivity shall be done as per IEC 62561-7 d. Type test reports of the earthing materials from CPRI/ERDA/Equivalent lab shall be submitted.
6.2.	Measurement of Earth resistance	a. After the completion of work ground resistance of each installation shall be measured by BYPL/BRPL/Contractor. b. The measurement of resistance shall be witnessed and signed by representative of BYPL/BRPL as well as the contractor. The test certificates shall be generated for each installation clearly indicating the details of the transformer, name of the substation, location, district, serial no. of testing equipment and name of testing engineer. c. The desire ground resistance shall be measured after interconnection of earth pits is completed. The value of earth resistance shall not be more than **0.5 ohm**. d. In case where this value exceeds 0.5 ohms, the earthing design shall be redesigned. The pit location, earth electrode, soil treatment, earth conductor, GI strip used shall be checked whether properly used at site. If not, these shall be changed as per the redesigned plan.

7. DEVIATIONS

7.1.	Deviation	Deviations from this Specification shall be stated in writing with the tender by reference to the Specification clause/GTP/Drawing and a description of the alternative offer. In absence of such a statement, it will be assumed that the bidder complies fully with this specification. No deviation will be acceptable post order.

8. DOCUMENTS SUBMISSION

The bidder has to submit the following documents along with bid:-

8.1.	Complete earthing calculation
8.2.	Complete product catalogue, Manual and calibration certificate of the equipment
8.3.	Type test reports
8.4.	Deviation Sheet (if any)

9. GUARANTEED TECHNICAL PARTICULARS

S. No	Parameter	BYPL/BRPL Requirement	Vendor Data
9.1	Rod to Strip welding	Arc Welding	
9.2	Zinc deposition of GI earthing Strip	610gm/sqm	
9.3	Length of GI Strip	7m (Minimum)	
9.4	Diameter of MS Rod	40 mm MS rod/calculated diameter; whichever is maximum.	
9.5	CPRI/ERDA Certification of Earthing material	Test certificate to be provided	
9.6	Coating on earthing material	610gm/sqm	
9.7	Length of MS rod	3 m	
9.8	Purity of Copper	NA	
9.9	Short circuit withstand test of Rod	31.5kA	
9.10	Marking on the rod-Dimension Detail, product model no, Reference number of certification	Sample Required	
9.11	ROHS Certificate from NABL accredited lab for not having toxic chemical in earth enhance material	Test certificate to be provided	
9.12	Resistivity of earth enhancing material	0.12 ohm-m(Max)	
9.13	Welding	Arc welding	

9.14	Make of Steel	SAIL/ESSAR/TATA	

ANNEXURE A1 : REFERENCE FAULT LEVEL

Voltage Level(kV)	Design Fault Level
66/11	31.5 KA
33/11	25 KA

BSES

Technical Specification of

LT Power Cable(Single & Multi-Core)

Specification no – BSES-TS-01-LTPC-R0

Rev:		0
Date:		31 Mar 2022
Prepared by	Abhishek Vashistha	
	Rohit Patil	
Reviewed by	Puneet Duggal	
	Amit Tomar	31/03/2022
Approved by	Gaurav Sharma	
	K. Sheshadri	31/3/22

INDEX

Contents

1.0 SCOPE OF SUPPLY 3
2.0 CODES & STANDARDS 3
3.0 CABLE DESIGN 4
4.0 CABLE DRUM 6
5.0 PACKING, SHIPPING, HANDLING & STORAGE 7
6.0 QUALITY ASSURANCE, TESTING& INSPECTION 7
7.0 DOCUMENT SUBMISSION MATRIX 8
8.0 PROGRESS REPORTING 9
9.0 DEVIATION 10
10.0 Annexure -A 11
11.0 ANNEXTURE- B 14
12.0 ANNEXTURE – C 18
13.0 ANNEXTURE – D 19

1.0 SCOPE OF SUPPLY

The specification covers design, manufacture, shop testing, packing and delivery of 1100 Volts grade, Aluminium conductor XLPE insulated power cables.

2.0 CODES & STANDARDS

The cables shall be designed, manufactured and tested in Accordance with the following Indian & IEC standards.

2.1	IS- 7098 (Part-1)	Cross linked polyethylene insulated PVC sheathed cables for working voltages upto and including 1100V.
2.2	IS- 6474	Polyethylene insulation & sheath of electric cables.
2.3	IS- 5831	PVC insulation and sheath of electrical cables.
2.4	IS : 10810	Methods of tests for cables.
2.5	IS : 8130	Conductors for insulated electrical cables and flexible cords.
2.6	IS : 3975	Low carbon galvanized steel wires, formed wires and tapes for armouring of cables.
2.7	IS- 4026	Aluminum ingots, billets and wire bars (EC grade)
2.8	IS-5484	EC Grade aluminium rod produced by continuous casting and rolling
2.9	IS : 10418	Specification for drums for electric cables.
2.10	IS : 3961	Recommended current ratings for cables.
2.11	IS:1255	Installation and Maintenance of power cables upto and including 33 kV rating.
2.12	IS:4826	Specification for hot-dipped galvanized coatings on round steel wires
2.13	IS:1717	Metallic Materials – Wire – Simple torsion test
2.14	IEC 60228	Conductors of insulated cables. Guide to the dimensional limits of circular conductors.
2.15	IEC 60331	Fire resisting characteristics of electric cables.
2.16	IEC 60332 – 3	Tests on electric cables under fire conditions. Part 3: Tests on bunched wires or cables.
2.17	IEC 60502	Extruded solid dielectric insulated power cables for rated voltages from 1kV to 30 kV.
2.18	IEC 60754 – 1	Test on gases evolved during combustion of materials from cables. Part 1: Determination of the amount of halogen acid gas evolved during combustion of polymeric material taken from cables.
2.19	IEC 60811	Common test methods for insulating and sheathing materials of electric cables
2.20	IEC 60885	Electric test methods for electric cables
2.21	IEC 60304	Standard colours for insulation for low frequency cables and wires.
2.22	IEC 60227	PVC insulated cables of rated voltages up to and including 460/760 V.

2.23	IEC 1034	Measurement of smoke density of electric cables burning under defined conditions
2.24	ASTMD 2843	Standard Test Method for density of Smoke from the burning or decomposition of cables
2.25	ASTM 2863	Standard Test Method for measuring of minimum oxygen concentration
2.26	IEC 60754-1	Test on gases evolved during combustion of materials for cables. Part 1 – Determination of the Halogen Acid gas Content
2.27	IS 1554 part 1	Specification for PVC insulated (Heavy duty) Electric cable

3.0 CABLE DESIGN

Description of each item mentioned in the specification (the text, BOQ, GTP or any site specific requirement) shall be followed along with IS: 7098 – P1

<table>
<tr><td>3.1</td><td>Conductor</td><td>a) Electrolytic Grade Stranded Aluminium Conductor
b) Grade: H2 as per IS: 8130/1984
c) Class 2
d) Chemical Composition as per IS 4026
e) Shape& Size:
<table>
<tr><th>S. no.</th><th>Shape</th><th>Single core (sq.mm)</th><th>Multi core (sq.mm)</th></tr>
<tr><td>1</td><td>Compacted Circular</td><td>• 1cx25
• 1cx95
• 1cx300
• 1cx630
• 1cx1000</td><td>• 2cx10</td></tr>
<tr><td>2</td><td>Sector</td><td>---</td><td>• 2cx25
• 4cx25
• 4cx50
• 4Cx150
• 4Cx300
• 4Cx400</td></tr>
</table></td></tr>
<tr><td>3.2</td><td>Insulation</td><td>Extruded XLPE insulation as per IS : 7098 part-1</td></tr>
<tr><td>3.3</td><td>Core Identification</td><td>a) Single Core Cable – Natural
b) Two Core Cable – Red & Black
c) Four Core Cable – Red, Yellow, Blue and Black</td></tr>
<tr><td>3.4</td><td>Inner Sheath</td><td>a) For Single Core Cable – Inner Sheath Not Required
b) For 2 Core cable- Pressurized Extruded, Black PVC type ST-2 (IS 5831-1984)
c) For 4 core cable –Extruded Black PVC type ST-2 (IS 5831-1984)</td></tr>
<tr><td>3.5</td><td>Armour</td><td>a) For 2C X 10 mm^2 – Galvanized Steel round wire.
b) For all sizes above 10 mm^2-Galvanized Steel Strip
c) Armour not required for single core cables
d) Minimum area of coverage of armouring shall be 90%</td></tr>
</table>

		e) The breaking load of armour joint shall not be less than 95% of that of armour wire / strip f) Zero negative tolerance for thickness of armour strip shall be as per IS:3975 g) Zinc rich paint shall be applied on strip/wire and its joint surface.
3.6	Outer Sheath	a) Extruded FRLS outer sheath of PVC (ST-2) shall be as per IS:5831 b) Colour : • For multi core cables-**Orange/Yellow as per tender requirement** • For single core cables **– Orange/Black as per tender requirement** c) FRLS Outer sheath of all the LT cables shall be UV resistant; as these cables are laid in air exposed to sun. Bidder to ensure the same for these requirements supported by required test. d) Shape of the cable over the outer sheath shall be circular, when manufactured/completed. e) The FRLS outer Sheath shall be embossed with following minimum text: i) The voltage designation ii) Type of construction /cable code (For e.g. A2XWY/A2XFY) iii) FRLS iv) Manufacture name/Trade mark v) Number of Cores and nominal cross section area of conductor vi) Name of buyer i.e BSES vii) Month & year of manufacturing viii) IS reference , i.e. IS:7098 ix) P.O No. and Date x) Font size shall be 5/5mm xi) ISI mark The embossing shall be progressive, automatic, in line and marking shall be legible and indelible. Following points shall be printed on every meter of cable i. Progressive (Sequential) length of cable at every meter, starting from zero for every drum. Colour filled in for the progressive marking, shall be with proper contrast in colouring. ii. Drum number marking on every meter of the cable length
3.7	Bending Radius	Bending Radius of cable shall comply to IS:1255
3.8	Sealing of cable end	Both ends of the cable shall be sealed by means of non-hygroscopic

		heat shrinkable PVC caps
3.9	FRLS Properties	Oxygen Index : Not less than 29% as per ASTM 2863
		Temperature Index : 250 Deg C at Oxygen Index 21 (when tested as per ASTM D 2863)
		Max Acid Gas Generation – Not more than 20% as per IEC -60754-1
		Light Transmission - Minimum 40% when tested as per ASTMD 2843 (Smoke Density rating shall be max 60%)
		Flammability Test – IEC 60332 part -1

4.0 CABLE DRUM

4.1	Reference Standard	Cable drum shall comply with IS: 10418.
4.2	Type of Drum	Wooden drums with anti termite treatment. (The drums shall be provided with M.S spindle plate and nut-bolts arrangement as per IS : 10418)
4.3	Drum Length & Tolerance	• For 2C X 10 mm^2 Cable - 1000+/-5% Mtr • For all Other cable sizes - 500 +/-5% Mtr
4.4	Overall Tolerance	-2 % for the total cable length for the entire order.
4.5	Short Length of Cable	a) Minimum acceptable length (Max. is 525 mtr) shall be 1 % of the total ordered qty. & no length shall be less than 250 mtr. Manufactures shall be taken prior approval from BSES Engineering for any short length supply. Short length will be accepted in last lot. b) Manufacture shall not be allowed to put two cable pieces of different short length in same cable drum
4.6	Preventive Measure for cable Drum	a) The surface of the drum and outer most cable layer shall be covered with water proof layer b) Ferrous part of wooden drum shall be treated with suitable rust preventive paint/coating to minimize rusting during storage.
4.7	Drum Identification Labels	a) Drum identification number b) Cable voltage grade c) Cable code (eg. A2XFY/A2XWY) d) Number of cores and cross sectional area e) Cable quantity i.e cable length (Meters) f) Purchase order number, date & SAP item code g) Total weight of cable and drum (kg) h) Manufacture's and Buyer's name i) Month & year of manufacturing j) Direction of rotation of drum; an arrow and suitable accompanying wording shall be marked on one end of the reel indicating the direction in which it should be rolled. k) Cable length final end-marking (i.e reading at the inner end

		and reading at the outer end, just before packing shall be marked on the drum.

5.0 PACKING, SHIPPING, HANDLING & STORAGE

5.1	Shipping information Plan	The seller shall be give complete shipping information concerning the weight ,size of each package
5.2	Transit Damage	The seller shall be held responsible for all transit damage due to improper packing/inside cable damaged found in store/site
5.3	Cable Drum Handling	The drum shall be with M.S spindle plate(with nut –bolts) of adequate size to suit the spindle rod , normally required for handling the drums , according to expected weight of the cable drums as per IS:10418

6.0 QUALITY ASSURANCE, TESTING& INSPECTION

All the tests shall be carried out in accordance with IEC / IS standards.

6.1	Quality Assurance Plan	In event of order manufacturer has to submit the signed copy of QAP.
6.2	Inspection hold points	AS per approved QAP (QAP shall be approved at the time of GTP approval)
6.3	Routine Test	a) Measurement of Electrical Resistance b) HV test with power frequency AC voltage
6.4	Type Test	**For bid participation–** (a) Bidder must be submitted cable type tested report from CPRI/ERDA/NABL approved lab for the type, size & rating of similar or higher sizes of offered cable along with bid. **After award of P.O.-** (b) If a bidder has valid type test report from CPRI/ERDA lab for the type, size & rating of similar or higher sizes of offered cable (including FRLS)—No need to conduct fresh type test from CPRI/ERDA lab. (c) If a bidder has valid type test report from CPRI/ERDA lab for the type, size & rating of similar or higher sizes of offered cable (except FRLS)—Need to conduct only fresh type test of FRLS properties test from CPRI/ERDA/NABL lab(list of tests mentioned in clause 3.9)without any commercial implication to BSES. (d) If a bidder has valid type test report from NABL lab for the type, size & rating of similar or higher sizes of offered cable (including FRLS)—Need to conduct complete type test (including FRLS properties) from CPRI/ERDA lab without any

		commercial implication to BSES. (Type test shall not be more than 5 years old. If the type test report is more than 5 years old (max 10 years), it can be considered subject to no change in their design) (e) UV resistance test to be carried out on one sample from CPRI/ERDA/NABL Accredited Lab as per ASTM standard (sample shall meet minimum 80% retention in tensile strength and elongation after exposure of 21 days as per ASTM standard).
6.5	Acceptance Test (Shall be conducted as per Cl.15.2 of IS 7098 Part-1 & IS 1554 part 1 for each lot of cable)	a) For cable sizes up to 25 mm^2 – one sample for chemical composition and purity test of aluminium shall be conducted per300km of ordered quantity and multiple thereof. b) For cable sizes 50mm^2 – one sample for chemical composition and purity test of aluminium shall be conducted per 100km of ordered quantity and multiple thereof. c) For cable sizes above 50 mm^2 – one sample for chemical composition and purity test of aluminium shall be conducted upto 50km of ordered quantity and multiple thereof. d) Chemical composition and purity test of aluminium shall be conducted from the lot offered to BSES on each size involved in the purchase order. Test shall be carried out at NABL accredited third party lab without any price implication to BSES. e) The sample will be selected either during acceptance test or after receipt of cable in BSES Stores.
6.6	Inspection	a) The buyer reserves the right to witness all tests specified on completed cables b) The buyer reserves the right to inspect cables at the seller's works at any time prior to dispatch either in finished form or during manufacturing, to prove compliance with the specifications. c) In-process and final inspection call intimation shall be given in 10 days advance to purchaser/CES.
6.7	Test Certificates	Complete test certificates (routine & acceptance tests) need to be submitted along with the delivery of cables.

7.0 DOCUMENT SUBMISSION MATRIX

Document/Drawing submission shall be as per the matrix given below:

a. All documents/drawings shall be provided in soft copy only via mail or in returnable Pen drives
b. Language of the documents shall be English only.
c. Document check sheet compliance shall be the first sheet for each submission stage i.e. Technical bid, Drawing Approval, Pre Dispatch, Pre closure

d. No submission is acceptable without check list compliance.
e. Deficient/ improper or incomplete document/ drawing submission shall be liable for rejection.
f. Order of documents shall be strictly as per the check list.
g. Any document not included in the below table but necessary for detailed engineering shall be deemed to be included in bidder's scope

S No.	Detail of Document	Bid	Approval	Pre Dispatch
1	Guaranteed Technical Particulars (GTP)	Required	Required	
2	Deviation Sheet, if any	Required	Required	
3	Detailed cross sectional drawing of cable	Required	Required	
4	Dimensional drawing of cable drum	Required	Required	
4	Type test reports of offered type and rating of cable	Required	Required	
5	BIS certificate	Required		
6	Complete cable catalogue	Required		
7	Make of Raw Materials	Required	Required	
8	Cable de-rating factors	Required	Required	
9	Armour coverage calculation		Required	
10	Inspection test reports and Routine Test Certificates carried out in manufacturer's works			Required
12	Test certificates of all raw materials			Required
13	Calibration test reports of instruments			Required

8.0 PROGRESS REPORTING

8.1	Outline Document	To be submitted for purchaser approval for outline of Production-inspection, testing-inspection, packing, dispatch, documentation programme.
8.2	Detailed Progress Report	To be submitted to purchaser once a month containing a) Progress on material procurement b) Progress on fabrication (As applicable) c) Progress on assembly (As applicable) d) Progress on internal stage inspection e) Reason for any delay in total programme f) Details of test failures if any in manufacturing stages. g) Progress on final box up constraints/forward path.

9.0 DEVIATION

a) Deviations from this specification shall be listed separately by bidder clause wise (format given below) along with optional offer and has to submit the list along with bid/quotation. BSES will review the deviations and if BSES is agreed with the deviation, seller has to take written confirmation from BSES on deviation during tender evaluation.
b) In the absence of any separate list of deviations from the bidders with bid as well as written confirmation from BSES on deviations, it will be assumed by the Buyer that the Seller complies with the Specification fully.
c) Any deviations mentioned in any other submitted bid documents (i.e.in filled GTP, Catalog, BSES old approval, buyer's/seller's standards etc) by seller without separate deviation sheets will not consider as a deviation from this tech spec at any stage of contract.

Deviation sheet format

Sl. No.	Document Name	Clause No.	Deviation	Reason	Merit to BSES

10.0 Annexure -A

GUARANTEED TECHNICAL PARTICULARS (Multi-core)

(Standard Cable sizes are 2cx10, 2cx25, 4cx25, 4cx50, 4C X 95, 4cx150, 4cx300, 4cx400)

For each size /rating separate GTP need to be furnished

Sr. No.	Description	Buyer's Requirement	Seller's data
	Manufacture Contact Person & Number		
	Purchase Req. No.	……..	
	Guarantee Period: (Min)	60 Months (from date of commissioning) / 66 months (from date of receipt at purchaser's store) whichever is earlier	
	Applicable IS / IEC Standard followed by vendor	As mentioned in the clause no – 2.0	
1	Make	…	
2	Type (as required by purchaser)		
A	For 2CX10Sqmm	A2XWY	
B	For Sizes above 10 mm^2	A2XFY	
3	Voltage Grade (kV)	1.1	
4	Maximum Conductor temperature		
A	Continuous	90°C	
B	Short time	250°C	
5	Conductor		
A	Material and Grade	As per Cl.3.1	
B	Make of Al	Ref Annexure D	
C	Size (mm^2)	…… mm^2	
D	Min no. of wires in each conductor (Nos.)	As per Manufacturer Standard	
E	Min Dia. of wires in each conductor before compaction (mm)	As per Manufacturer Standard	

Sr. No.	Description	Buyer's Requirement	Seller's data
F	Shape of Conductor	As per Cl.3.1 (e)	
G	Diameter over conductor (mm)	……	
H	Maximum Conductor resistance at 20 ° C(Ohm/Km)	As per Table 2 of IS 8130	
6	Insulation		
A	Insulation Material	As per Cl. 3.2	
B	Nominal thickness (mm)	As per Table 3 of IS 7098 Part-1	
C	Diameter over Insulation (mm) Approx.	……	
D	Make of insulation compound	Ref: Annexure D	
7	Inner Sheath		
A	Material and Type	As per Cl. 3.4	
B	Minimum thickness	As per Table 5 of IS 7098 Part-1	
C	Approx. dia. Over sheath (mm)	……	
8	Galvanized Steel Armour	as per purchaser's site - specific condition	
A	Material		
a)	For 2CX10 mm^2	G.I. Wire	
(i)	Wire Dia. (mm)	1.4+/-0.040	
(ii)	No. of wires	As per Manufacturer Standard	
b)	For sizes above 10 mm^2	G.I. Strip	
(i)	Strip size (Width and Thickness)	4x0.8 (Zero negative tolerance for thickness)	
(ii)	No. of Strips	As per Manufacturer Standard	
B	Area covered by Armour	Min 90% and calculations shall be strictly as per Annexure-D	
C	Dia. over Armour – Approx.(mm)	……	

Sr. No.	Description	Buyer's Requirement	Seller's data
9	Outer Sheath (FRLS)		
A	Material and Type	As per Cl. 3.6	
B	Minimum Thickness	As per Table 8 of IS 7098 Part-1	
C	Colour	Orange	
D	Embossing Details	As per Cl.3.6 (e)	
10	Approx. overall dia. (mm)	……	
11	Overall order tolerance	- 2 % for the total cable length for the entire order	
12	Cable Drum		
A	Type of Drum	Wooden	
B	Drum Length & tolerance	As per Spec. Cl. 4.3 & 4.4	
C	Marking on Drum	As per Spec. Cl. 4.7	
D	Drums provide with MS Spindle plate & nut bolts arrangement (as per IS:10418)	Required	
13	End Cap	Required	
14	Weights	……	
a)	Net Weight of cable (Kg/Km.) – Approx		
b)	Weight of empty drum	Kg	
c)	Weight of cable with drum	Kg	
15	Continuous current rating for standard I.S condition laid direct		
a)	In ground 30° C	Amps	
b)	In duct 30° C	Amps	
c)	In Air 40° C	Amps	
16	Short circuit current for 1 sec of Conductor (kAmp)	……	
17	Electrical Parameters at Maximum operating temperature:		
A	AC Resistance	Ohm/Km	

Sr. No.	Description	Buyer's Requirement	Seller's data
B	Reactance at 50 C/s	Ohm/Km	
C	Impedance	Ohm/Km	
D	Capacitance	Micro farad / Km	
18	Recommended minimum bending radius	..... x O/D	
19	De-rating factor for following Ambient temperature in	Ground / Air	
a)	At 30° C		
b)	At 35° C		
c)	At 40° C		
d)	At 45° C		
e)	At 50° C		
20	Group factor for following Nos. of cables laid	Touching / Trefoil	
a)	3 Nos.		
b)	4 Nos.		
c)	5 Nos.		
d)	6 Nos.		
21	Process of Cross linking of Polyethylene	Dry/ Sioplas Cure	
22	Type test	Is copy of latest valid TTR for respective Sizes enclosed? Yes /No	
23	FRLS Properties	As per IS 1554, Part-1	
	Oxygen Index	As per IS 1554, Part	
	Temperature Index	As per IS 1554, Part	
	Max Acid Gas Generation	As per IS 1554, Part	
	Light Transmission / Smoke Density	As per IS 1554, Part	

11.0 ANNEXTURE- B

GUARANTEED TECHNICAL PARTICULARS (Single Core)
(Separate GTP needs to be furnished for 25, 95, 300, 500, 630 & 1000 mm^2 cables)

S.No.	Description	Buyer's Requirement	Seller's data
	Manufacture Contact Person & Number		
	Purchase Req. No.	……..	
	Guarantee Period: (Min)	60 Months (from date of commissioning) / 66 months (from date of receipt at purchaser's store) whichever is earlier	
	Applicable IS / IEC Standard followed by Vendor	As mentioned in the clause no-2.0	
1	Make	……	
2	Type	A2XY (Un-armoured)	
3	Voltage Grade (kV)	1.1kV	
4	Maximum Conductor temperature		
A	Continuous	90°C	
B	Short time	250°C	
5	Conductor		
A	Material and Grade	As per Cl. 3.1	
B	Size (mm^2)	.....mm^2	
C	Min no. of wires in each conductor (Nos.)	As per Manufacturer Standard	
D	Min Dia. of wires in each conductor before compaction (mm)	As per Manufacturer Standard	
E	Shape of conductor	Compacted Circular	
F	Diameter over conductor (mm)	……	
G	Maximum Conductor resistance at 20 ° C(Ohm/Km)	As per Table 2 of IS 8130	
H	Make of Al	Ref Annexure D	
6	Insulation	As per Table 3 of IS7098 Part-1	
A	Insulation Material	As per Cl. 3.2	

S.No.	Description	Buyer's Requirement	Seller's data
B	Nominal thickness (mm)		
(i)	For 1Cx300 mm^2	1.8 mm	
(ii)	For 1Cx500 mm^2	2.2 mm	
(iii)	For 1Cx630 mm^2	2.4 mm	
iv)	For 1Cx1000 mm^2	2.8 mm	
C	Diameter over Insulation (mm) Approx.	……	
D	Make of insulation compound	Ref: Annexure D	
7	Inner Sheath	Not applicable	
8	Armour	Not applicable	
9	FRLS Outer Sheath		
A	Material and Type	As per Cl. 3.6	
B	Minimum Thickness	As per Table 8 of IS 7098 Part-1	
C	Colour	Orange	
D	Embossing Details	As per Cl.3.6 (e)	
10	Approx. overall dia. (mm)	……	
11	Overall order tolerance	-2 % for the total cable length for the entire order	
12	Cable Drum		
A	Type of Drum	Wooden	
B	Drum Length & tolerance	As per Spec. Cl. 4.3 & 4.4	
C	Marking on Drum	As per Spec. Cl. 4.7	
D	Drums provide with MS Spindle plate & nut bolts arrangement (as per IS:10418)	Required	
13	End Cap	Required	
14	Weights	……	
a)	Net Weight of cable (Kg/Km.) – Approx		
b)	Weight of empty drum	Kg	

S.No.	Description	Buyer's Requirement	Seller's data
c)	Weight of cable with drum	Kg	
15	Continuous current rating for standard I.S condition laid direct		
a)	In ground 30° C	Amps	
b)	In duct 30° C	Amps	
c)	In Air 40° C	Amps	
16	Short circuit current for 1 sec of Conductor (kAmp)	……	
17	Electrical Parameters at Maximum operating temperature:		
A	AC Resistance	Ohm/Km	
B	Reactance at 50 C/s	Ohm/Km	
C	Impedance	Ohm/Km	
D	Capacitance	Micro farad / Km	
18	Recommended minimum bending radius	……. x O/D	
19	Derating factor for following Ambient temperature in	Ground / Air	
a)	At 30° C		
b)	At 35° C		
c)	At 40° C		
d)	At 45° C		
e)	At 50° C		
20	Group factor for following Nos. of cables laid	Touching / Trefoil	
a)	3 Nos.		
b)	4 Nos.		
c)	5 Nos.		
d)	6 Nos.		
21	Process of Cross linking of Polyethylene	Dry/ Sioplas Cure	
22	Type test	Is copy of latest valid TTR for respective Sizes enclosed?	

S.No.	Description	Buyer's Requirement	Seller's data
		Yes /No	
23	FRLS Properties		
	Oxygen Index	As per IS 1554, Part	
	Temperature Index	As per IS 1554, Part	
	Max Acid Gas Generation	As per IS 1554, Part	
	Light Transmission / Smoke Density	As per IS 1554, Part	

12.0 ANNEXTURE – C

ARMOUR COVERAGE PERCENTAGE

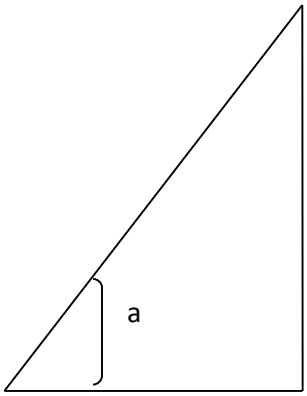

Percent coverage = $\frac{N \times d}{W} \times 100$

Where,
N = number of parallel wires / Strips
d = diameter of wire / width of formed wires
W = π x D x Cos a,
D = diameter under armour
a = angle between armouring wire / formed wires and axis of cable
tan a = π x D/C, and
C = lay length of armouring wires / formed wires.

Min 90% armour coverage shall be provided both in case of wires and strips.

The gap between armour wires / formed wires shall not exceed one armour wire / Formed wire space and there shall be no cross over / over-riding of armour wire / Formed wire so, the minimum area of coverage of armouring shall be 90%.

13.0 ANNEXTURE – D

LIST OF SUB-VENDORS

Sr. No.	Description of Material	Sub-Vendors
1	E.C Grade Aluminium Rod	Bharat Aluminium Co. Ltd. (BALCO) Hindustan Aluminium Co. Ltd. (HINDALCO) National Aluminium Co. Ltd. (NALCO)
2	XLPE Compound	Kkalpana Industries Ltd. KLJ Polymers and Chemicals Ltd. Dow Chemical, U.S.A Borealis, Sweden Hanwha, Seoul, South Korea
3	PVC Compound	Kkalpana Industries Ltd. KLJ Polymers and Chemicals Ltd. Universal SCJ Plastic Sriram Polytech Shri Ram Vinyl, Kota
4	GI Strip	Tata Balaji Systematic Mica Wires Pvt Ltd. Bansal Industries

BSES

TECHNICAL SPECIFICATION

FOR

FRLS CONTROL CABLE

SPECIFICATION NO. – BSES-TS-57-CCAB-R0

Rev:		0
Pages:		11
Date:		20 April 2022
Prepared by	Abhishek Vashistha	
	Rohit Patil	
Reviewed by	Puneet Duggal	
	Amit Tomar	
Approved by	Gaurav Sharma	
	Gopal Nariya	

INDEX

1.0 SCOPE 3

2.0 STANDARDS & CODES 3

3.0 SERVICE CONDITIONS 4

4.0 DESIGN FEATURES 4

5.0 QUALITY ASSURANCE PLAN, INSPECTION AND TESTING 6

6.0 PACKING, SHIPPING, HANDLING & SITE SUPPORT 7

7.0 DEVIATIONS 7

8.0 DOCUMENT SUBMISSION MATRIX 8

Annexure – A: Guaranteed Technical Particulars (Data by Supplier) 9

1.0 SCOPE

The scope of supply includes Design, Manufacture, Testing at manufacturer's works before dispatch, packing, delivery including unloading and stacking at site/store of Control Cable complete with all accessories.

2.0 STANDARDS & CODES

Materials, equipments and methods used in the manufacture of Cable shall conform to the latest edition of following:

S No.	STANDARD	DESCRIPTION
2.1	IS- 1554 Part-1	PVC insulated Cables
2.2	IS- 5831 : 1984	PVC insulation & sheath of electric cables.
2.3	IS- 10810 : 1984	Methods of test for cables.
2.4	IS- 8130 : 1984	Conductors for insulated electric cables and flexible cords.
2.5	IS- 3961 Part 2	Recommended current ratings for PVC insulated and PVC sheathed heavy duty Cables
2.6	IS- 3975 : 1999	Mild steel wires, formed wires and tapes for armouring of cables.
2.7	IS- 10418 : 1982	Drums for Electric Cables
2.8	IEC 60228 Ed.3.0 b	Conductors of insulated cables.
2.9	IEC 60332-3-21 Ed.1.0 b	Tests on electric cables under fire conditions. Part 3-21. Tests on bunched wires or cables.
2.10	IEC 60502-1 Ed. 2.1 b	Power cables with extruded insulation and their accessories for rated voltage from 1kV upto 30kV –Part 1: cables for rated voltages of 1kV and 3kV
2.11	IEC 60811	Common test methods for insulating and sheathing materials of electric cables.
2.12	IEC 60885 Ed.1.0 b	Electric test methods for electric cables.
2.13	IEC 60227	PVC insulated cables of rated voltages up to and including 450/750 V.
2.14	IEC 60028 Ed. 2.0 b	International Standard of Resistance for Copper
2.15	ASTMD 2843	Standard Test Method for density of Smoke from the burning or decomposition of cables
2.16	ASTM 2863	Standard Test Method for measuring of minimum oxygen concentration
2.17	IEC 60754-1	Test on gases evolved during combustion of materials for cables. Part 1 – Determination of the Halogen Acid gas Content

3.0 SERVICE CONDITIONS

Control Cables to be supplied against this specification shall be suitable for satisfactory operation under the following conditions-

3.1	Average grade atmosphere	Heavily polluted, Dry
3.2	Maximum altitude above sea level	1000M
3.3	Relative Humidity	100%
3.4	Ambient air temperature	Highest 50 Deg C Average 40 Deg C Minimum 0 Deg C
3.5	Operating temperature	0 Deg C - 50 Deg C
3.6	Rainfall	750mm concentrated in four months

4.0 DESIGN FEATURES

(Refer Annexure – "A")

S No.	Parameters	Technical Requirements
4.1	Cable construction Features	Size & dimensions of each item mentioned under this clause shall be followed as detailed out in GTP, refer Annexure A
4.2	Conductor	• Stranded, plain copper, circular • Shall be made from high conductivity copper rods
4.3	Insulation	Extruded PVC Insulation Type A as per IS 5831
4.4	Core Identification	As per IS 1554 Part 1
4.5	Inner Sheath	Extruded Inner Sheath of Black PVC type ST-2 as per IS 5831
4.6	Armour	• As per Clause 13.2 of IS 1554 Part-1: Galvanized steel round wire armour. • Minimum area of coverage of armouring shall be not less than 90 %. (refer Annex C of IS 1554-part 1 for % calculation)

S No.	Parameters	Technical Requirements
4.7	Outer Sheath	a) Extruded outer sheath of PVC type ST-2 as per IS 5831 having FRLS properties b) Color : Black c) The Outer Sheath shall be embossed with: i. The voltage designation ii. Type of construction / cable code (for e.g. AYWY) iii. Manufacturers Name or Trade mark iv. Number of Cores and nominal cross sectional area of conductors v. The drum progressive length of cable and individual drum number at every meter. (By Printing) vi. Name of buyer i.e. BSES vii. Month & Year of Manufacturing viii. P.O. No. and P.O. Date
4.8	FRLS Properties	a) Oxygen Index : Not less than 29% as per ASTM 2863 b) Temperature Index: 250°C at Oxygen Index 21 (when tested as per ASTM D 2863) c) Max Acid Gas Generation – Not more than 20% as per IEC -60754-1 d) Light Transmission - Minimum 40% when tested as per ASTMD 2843 (Smoke Density rating shall be max 60%) e) Flammability Test – As per IEC 60332-III, Cat – B, IEC 60332- I, IS- 10810 – Part 53, IS:10810 – Part 61 & 62 (Category A)
4.9	Sealing of cable end	Both ends of the cable shall be sealed with PVC Cap.
4.10	Drum length & tolerance	500 mtr (+/- 5%)
4.11	Overall tolerance in cable length	- 2 %
4.12	Short length of cables	a) Minimum acceptable short length shall be above 100 meters. Manufacturer shall be required to take prior approval from engineering for any short length supply. b) Manufacturer shall not be allowed to put two cable pieces of different short lengths in same cable drum. c) Only 1% of the total ordered quantity.

5.0 QUALITY ASSURANCE PLAN, INSPECTION AND TESTING

S No.	Parameters	Technical Requirements
5.1	Quality Assurance Plan	QAP Shall be submitted by vendor for approval. Inspection and testing of the material shall be carried out accordingly.
5.2	Type test	Cables must be of type tested as per relevant IS/IEC/ASTM. Type test conducted either from CPRI/ERDA/NABL third party accredited lab will be treated as valid. Type test reports shall be submitted for the type, size & rating of cable offered along with bid.
5.3	Routine test	Each drum length of cable shall be subjected to the routine tests as mentioned in IS 1554 part -1
5.4	Acceptance Tests	The sampling & acceptance tests Shall be conducted, as per IS 1554 Part-1 and approved QA plan, for each lot of cable during the inspection of lot at manufacturer's works.
5.5	Inspection	a) The buyer reserves the right to inspect cables at the Seller's works at any time prior dispatch, to verify compliance with the specifications. b) In-process and final inspection call intimation shall be given in 15 days advance to purchaser. c) In the event of any discrepancy in the test reports i.e. test reports not acceptable or any type tests (including special /additional tests, if any) not carried out, same shall be carried out without any cost implication to BSES before dispatch of cable.
5.6	Test certificates	Test certificates (routine and acceptance) shall be submitted along with the dispatch documents.

6.0 PACKING, SHIPPING, HANDLING & SITE SUPPORT

6.1	Packing	The cable shall be wound on wooden drums (with anti termite treatment and M.S. spindle plate with nut-bolts). Cable should be packed conforming to Indian / international standards. The drum shall be fully enclosed by suitable packing preferably PP sheeting.
6.2	Drum identification label	The following information shall be marked on the drum: a) Drum identification number b) Trade name or trade mark; if any c) Name of manufacturer d) Name of buyer i.e. BSES e) Cable voltage grade f) Cable code (e.g. YWY) g) Number of cores and cross sectional area h) Purchase order number with SAP item code i) Year and month of manufacturing j) Direction of rotation of drum (an arrow) k) Net weight of cable in drum and gross weight of cable with drum l) Batch no or Lot no. m) Cable length initial reading & end reading shall be marked on drum. Cable starting end shall be taken out from winding to read this drum reading with proper sealing to protect against external damage.
6.3	Shipping	The seller shall give complete shipping information concerning the gross weight, size of each packing.
6.4	Handling & Storage	Manufacturer instruction shall be followed. Detail handling & storage instruction sheet/manual needs to be furnished before commencement of supply.
6.5	Transit damage	The seller shall be responsible for any transit damage due to improper packing.

7.0 DEVIATIONS

7.1	Deviation	Deviations from this Specification shall be stated in writing with the tender by reference to the Specification clause/GTP/Drawing and a description of the alternative offer. In absence of such a statement, it will be assumed that the bidder complies fully with this specification.

8.0 DOCUMENT SUBMISSION MATRIX

Document/Drawing submission shall be as per the matrix given below. All documents/drawings shall be provided in soft copy only in returnable Pen drives. Language of the documents shall be English only. Incomplete submission shall be liable for rejection.

S No.	Description	Bid	Approval	Pre Dispatch
8.1	Guaranteed Technical Particulars (GTP)	required	required	
8.2	Deviation Sheet, if any	required	required	
8.3	Detailed cross sectional drawing of cable	required	required	
8.4	Dimensional drawing of Cable Drum		required	
8.5	Type test reports for the offered type and rating of cable	required	required	
8.6	BIS Certificate	required		
8.7	Make of Raw Materials	required	required	
8.8	Cable de-rating factors	required	required	
8.9	Manufacturer's Quality Assurance Plan		required	
8.10	Detailed installation & commissioning instructions		required	
8.11	Test certificates of all raw materials			required
8.12	Inspection and routine test reports, carried out in manufacturer's works			required

Annexure – A: Guaranteed Technical Particulars (Data by Supplier)

(Standard Cable sizes are 2Cx2.5, 4Cx2.5, 6C X 2.5, 8Cx2.5, 10Cx2.5, 12C X 2.5 mm^2)

For each size separate GTP need to be furnished

***For any size other than standard sizes mentioned, GTP should be as per IS or requirement whichever applicable**

Sr.	Description	Buyer's requirement	Vendor's Data
	Purchase Req. No.	….	
	Guarantee Period: 5 Years	60/66 Months	
1.0	Make	To be specified by vendor	
2.0	Type (AS PER IS 1554 part -1)	YWY	
3.0	Voltage Grade (KV)	1.1	
4.0	Maximum Conductor temperature		
a)	Continuous (° C)	70°C	
b)	Short time (° C)	160°C	
5.0	Conductor		
a)	Size (mm^2)	2.5	
b)	No. of wires in each conductor	As per Manufacturer standard	
c)	Dia. of wires in each conductor before compaction (mm)	As per Manufacturer standard	
d)	Shape of Conductor	As per Clause 4.2 of specification	
e)	Diameter over conductor mm	To be specified by vendor	
f)	Maximum Conductor resistance at 20 ° C (Ohm/Km)	As per Table 2 of IS 8130	
6.0	Insulation	As per Table 1 of IS:5831 – 1984	
a)	Nominal thickness (mm)	As per Clause 4.3 of specification & Table 2 of IS 1554(Part-1)	
b)	Minimum thickness (mm)		
c)	Core Identification	As per IS 1554 Part 1	
d)	Approx. dia. over Insulation (mm)	To be specified by	

Sr.	Description	Buyer's requirement	Vendor's Data
		vendor	
7.0	Inner Sheath	As per Table 2 of IS:5831 – 1984	
a)	Minimum thickness (mm)	As per Table 4 of IS 1554(Part-1)	
b)	Approx. dia. Over sheath (mm)	To be specified by vendor	
8.0	Galvanized Steel Armour	As per IS 1554-part 1	
a)	Number of armour wire	As per Manufacturer Std.	
b)	Nominal dia. of Round Wire	As per Table 5 of IS 1554(Part-1)	
c)	Dia. over armour – approx.	To be specified by vendor	
d)	Lay Ratio	To be specified by vendor	
e)	Confirm minimum 90% coverage (submit calculation)		
9.0	Outer Sheath (FRLS)	As per Table 2 of IS:5831 – 1984	
a)	Thickness (min)	As per Table 7 of IS 1554(Part-1)	
b)	Color	Black	
10.0	Approx. overall dia. (mm)	To be specified by vendor	
11.0	Drum length & tolerance	As per clause 4.10 of specification	
12.0	End Cap	Required	
13.0	Drums provide with MS Spindle plate & Nut bolts arrangement	Required	
14.0	Net Weight of cable (Kg/Km.) – approx.	To be specified by vendor	

Sr.	Description	Buyer's requirement	Vendor's Data
15.0	Continuous current rating for standard I.S. condition laid Direct		
a)	In ground 30° C Amps	To be specified by vendor	
b)	In duct 30° C Amps	To be specified by vendor	
c)	In Air 40° C Amps	To be specified by vendor	
16.0	Short circuit current for 1 sec of conductor. (KAmp)	To be specified by vendor	
17.0	Electrical Parameters at Maximum Operating temperature:		
a)	Resistance (Ohm/Km) (AC Resistance)	To be specified by vendor	
b)	Reactance at 50 C/s (Ohm/Km)	To be specified by vendor	
c)	Impedance (Ohm/Km)	To be specified by vendor	
d)	Capacitance (Micro farad / KM)	To be specified by vendor	
18.0	Recommended minimum bending radius	…. x O/D	
19.0	FRLS Properties		
a)	Oxygen Index	To be specified by vendor	
b)	Temperature Index	To be specified by vendor	
c)	Max Acid Gas Generation	To be specified by vendor	
d)	Light Transmission / Smoke Density	To be specified by vendor	

BSES

Technical Specification

of

Illumination and Lighting System

Specification no – BSES-TS-98-ILS-R1

Rev		1
Page		1 of 12
Date		24 July 2024
Prepared by	Supriya Raina	
Reviewed by	Uttam Shukla	
Approved by	Deepti Sharma	

INDEX

1. SCOPE 3
2. STANDARDS AND CODES 3
3. ILLUMINATION SYSTEM 4
4. DISTRIBUTION PILLARS FOR NORMAL ILLUMINATION SYSTEM 6
5. LIGHTING DISTRIBUTION BOARDS 7
6. MAIN EMERGENCY LIGHTING BOARD 8
7. LUMINAIRES 9
8. JUNCTION BOXES/WALL BOXES 10
9. AUTOMATIC LIGHTING CONTROLLER 10
10. SOCKETS & SWITCHES 10
11. NAMEPLATE & MARKING 11
12. APPROVED MAKE OF COMPONENTS 11
13. INSPECTION & TESTING 12
14. DEVIATION 12

1. SCOPE

The specification covers the design, engineering, manufacture, assembly and testing at manufacturer's work, supply and installation of Illumination system for substation including normal distribution pillars, normal lighting board, emergency distribution pillar, emergency lighting board, Junction boxes, Illumination lamps with required lux level.

2. STANDARDS AND CODES

Standard Code	Standard Description
IS 16101 : 2012	General Lighting -LEDs and LED modules – Terms and Definitions
IS16102(Part 1) 2012	Self-Ballasted LED Lamps for General Lighting Services, Part 1 Safety Requirements
IS16102(Part 2) 2012	Self-Ballasted LED Lamps for General Lighting Services, Part 2 Performance Requirements
IS16103(Part 1) 2012	Led Modules for General Lighting, Part 1Safety Requirements
IS16103(Part 2) 2012	Led Modules for General Lighting, Part 2 Performance Requirements
IS15885(Part2/Sec13)	Safety of Lamp Control Gear , Part 2 Particular Requirements , Section 13 dc. or ac. Supplied Electronic Control gear for Led Modules
IS16104 : 2012	d.c. or a.c. Supplied Electronic Control Gear for LED Modules - Performance Requirements
IS16105 : 2012	Method of Measurement of Lumen Maintenance of Solid State Light (LED) Sources
IS16106 : 2012	Method of Electrical and Photometric Measurements of Solid-State Lighting (LED) Products
IS 16107(Part 1)2012	Luminaires Performance ,Part 1 General Requirements
IS 16107(Part 2)2012	Luminaires Performance, Part 2 Particular Requirements ,Section 1 LED Luminaire
IS 16108 : 2012	Photo biological Safety of Lamps and Lamp Systems
IS 10322 : 2012	Luminaires: Part 5 Particular requirements, Section 3 Luminaires for road and street lighting
IS 5	Colours for Ready Mixed Paints and Enamels
IS 613	Copper Rods and Bars for electrical purposes
IS 694	PVC Insulated cables for working voltages up to and including 1100 V
IS 2551	Danger notice plates
IS 5082	Wrought Aluminium and Aluminium alloy bars, rods, tubes and sections for electrical purpose
IS 6665	Code of practice for industrial lighting
IS 13703	LV Fuses for voltage not exceeding 1000V ac or 1500V dc
IS 10118	Code of Practice for Selection, Installation and Maintenance of Switchgear and Controlgear

International Standard	
IEC 62612	Self-ballasted LED lamps for general lighting services for voltage above 50 V — Performance requirements
IEC : 60598-2-3	Particular requirements - Luminaries for road and street lighting
IEC 62471	Photo biological safety of lamps and lamp systems
IEC 62778	Application of IEC 62471 for the assessment of blue light hazard to light sources and luminaries
IEC 61000-4-5	Electromagnetic compatibility (EMC) - Part 4-5: Testing and measurement techniques - Surge immunity test
IEC 60439	Low Voltage Switchgear and Controlgear assemblies - Type tested and partially type tested assemblies
IEC 60529	Degrees of protection provided by enclosures (IP Code)
IEC 60947-1	Low Voltage Switchgear and Controlgear - General Rules
IEC 60947-2	Low Voltage Switchgear and Controlgear - Circuit breakers
IEC 61643	Low-voltage surge protective devices

3. ILLUMINATION SYSTEM

3.1.	Lux level requirement	3.1.1. The design of the illumination system shall ensure availability of the minimum illumination levels as specified below with the maximum possible uniformity in the entire substation. The illumination system shall consist of the normal lighting system and emergency lighting system. The minimum illumination levels at workplane i.e at height of 0.00 mtr. shall be as specified below(Reference IS3646(Part II)). 3.1.1.1. Roads within substation : 20 lux 3.1.1.2. Boundary wall of the substation : 10 lux 3.1.1.3. Control room : 300 lux 3.1.1.4. Switchgear Room : 200 lux 3.1.1.5. Battery room : 100 lux 3.1.1.6. Stair case : 100 lux 3.1.1.7. Power Transformers : 100 lux 3.1.1.8. Cable cellar/ Indoor trench : 70 lux 3.1.1.9. Outdoor switchyard : 70 lux 3.1.1.10. APFC/ station trafo : 70 lux 3.1.1.11. Terrace : 20 lux 3.1.2. Contractor shall design the lighting system with the help of desired software. Owner shall verify the same post commissioning with lux meter to check the levels. In case desired lux levels are not met contractor has to install addition fitting in outdoor and indoor location as per requirement. 3.1.3. Complete design calculation sheets for arriving at the number of luminaires required for the normal and emergency requirements shall be furnished by the bidder. Design calculation sheets for the selection of cables, MCB, HRC fuses, bus bars, etc. are also required to be furnished for Owner's approval.

3.2.	Illumination circuit	3.2.1.	The illumination system load and welding load in the substation area shall be supplied from 415/230 volt ACDBs to be provided in the substation control room. Requisite numbers of 3-phase, 4-wire, cable circuits for illumination system and welding socket outlets shall be extended from the above board. The laying of cables from the Board to the illumination system/welding socket outlets and their installation are included in the Bidder's scope.
		3.2.2.	Each outgoing cable circuit for illumination loads from the 415 volt switchboard shall terminate in the respective outdoor pillar boxes located in the substation. Outgoing feeders from the illumination shall be taken to the various illumination points in the substation. Necessary fuses shall be provided near light fixtures in the substation.
		3.2.3.	The emergency illumination load shall be supplied from the main emergency illumination board located in the control room. Necessary cable circuits with appropriate fuses shall be provided by the Contractor for the supply system for emergency illumination load of the substation.
		3.2.4.	Emergency DC lighting system shall be provided in the substation wherever required. The emergency lighting shall be adequate for safe movement by the operating personnel in the substation in the event of failure of normal lighting system. Number of lights shall be decided at the time of detailed engineering. A total of minimum 12 no's individually controllable 18 watt LEDs shall be provided in the substation.
		3.2.5.	6 Nos. welding sockets to be provided, 4 Nos. in Outdoor Yard & 2 Nos. in Control room building.
		3.2.6.	Illumination to be provided inside the Indoor trenches as per required lux level.
		3.2.7.	At terrace, the lights shall be installed on Mumty external wall. No lighting pole is recommended.
3.3.	Wiring	3.3.1.	All lighting fixtures and 5A convenience outlets shall be wired with 1.1 KV grade PVC insulated extra flexible, multistranded, copper conductor cables of size not less than 2.5 sq.mm.
		3.3.2.	For 15A heavy-duty outlets copper conductor cables of size not less than 6 sq. mm shall be used.
		3.3.3.	The wiring shall consist of phase, neutral and ground. For grounding the lighting fixtures/convenience outlets etc. Green CU wire of size 2.5 sqmm shall be used. The phase and neutral conductor shall be suitably colour coded. For DC black & white wires to be used.
		3.3.4.	Supply shall be looped between the lighting fixtures of the same circuit by using junction boxes. For this purpose one (1) 100 mm x 100 mm square junction box shall be provided for each lighting fixture. For recessed lighting fixtures, supply shall be extended from the junction boxes to the fixtures by means of flexible conduits. The conduits shall be of HMS (High mechanical stress) type and of

		minimum dia 25 MM. While for stem-mounted/wall-mounted lighting fixtures the junction box shall be mounted below one of the mounting stems. 3.3.5. For lighting branch circuits the nos. of lighting switches shall be decided keeping in mind the ease of control, as well as to limit the current to 2.5A per circuit. 3.3.6. For convenience outlets, the bidder shall design the wiring scheme so as to limit 6 nos. of 5A outlets per branch circuit and two nos. of 15A outlets per branch circuit. 3.3.7. All wiring materials such as terminals, crimping lugs, ferrules etc. shall also be provided by the Contractor. 3.3.8. No section of the conduit shall be filled with more than 70% of its area. Any consumable material that is required for pulling the wires through conduit shall also be provided by the Contractor. 3.3.9. Lighting fixtures coming in one area shall be evenly distributed between three phases so that tripping of one phase or two phases does not cause total loss of illumination in that area.
3.4.	Required documents to be submitted	Complete manufacturer's literature/catalogues, performance curves, illumination distribution curves, G.A. drawings, specification sheets, etc. as relevant in respect of all materials/equipment to be supplied shall be submitted by the Contractor.
3.5.	Illumination system check after installation	After completion of installation of the illumination system in the substation, the actual illumination level at different locations shall be measured by the Contractor in the presence of Owner's authorised representative. If the average value of the measured illumination levels is found to fall short of the specified levels, the Contractor shall have to provide additional lighting fixtures so as to achieve the specified levels of illumination at no additional cost to the Owner. While measuring the illumination levels due allowance shall be made on account of maintenance factor. The specified lux levels shall be suitably increased to cover maintenance factor of 0.6 for outdoor areas.

4. DISTRIBUTION PILLARS FOR NORMAL ILLUMINATION SYSTEM

4.1.	Construction	4.1.1. Distribution pillars of adequate dimensions shall be constructed from sheet steel having a thickness not less than 2 mm. 4.1.2. The pillars shall be totally enclosed weather-proof, dustproof, vermin-proof, having hinged doors with locking arrangement and shall be capable of being mounted in the substation. 4.1.3. The pillars suitable for cable entry at the bottom shall be designed for easy access of connections to terminals and inspection of equipment mounted therein. 4.1.4. The degree of protection of the board shall be IP55. 4.1.5. The enclosure shall be painted externally with Shade No., 692 of IS:5 and internally with brilliant white of semi-glossy

		finish of IS:5. 4.1.6. Location of LDB, ELDB & PDB to be finalized during detailed engineering.
4.2.	Configuration	4.2.1. Each pillar shall accommodate the following: 4.2.2. One incoming, 4-pole (3 phase and neutral) isolating switch with MCB of appropriate current rating. 4.2.3. 3-phase and neutral bus bars of appropriate current rating. 4.2.4. Single-pole earth leakage circuit breakers of suitable current ratings on all outgoing circuits. 4.2.5. Neutral links for all outgoing circuits. 4.2.6. Cable lugs, compression type cable glands, name plates, circuit numbers, earthing lugs, etc. to make the pillar complete in all respects. 4.2.7. 20% spare outlets shall be provided for outgoing feeders. 4.2.8. Three (3) indicating lamps with fuses to indicate that supply is 'ON'.

5. LIGHTING DISTRIBUTION BOARDS

5.1.	Construction	5.1.1. Metal-clad enclosure with minimum 2 mm CRCA sheets for load-bearing members and 1.6 mm for non load-bearing members suitably reinforced with structural. 5.1.2. 3-phase, 4-wire bus bar system with high conductivity aluminium busbars mounting on FRP insulators having anti-tractive property with minimum 25 mm phase-to-phase and minimum 19 mm phase-to-earth clearances. The busbars shall be uniform throughout the length of the LDB and busbar joints shall be silver plated and covered with shrouds. 5.1.3. All cables shall enter from the bottom. 5.1.4. The degree of protection for the LDB shall be IP-54. 5.1.5. The enclosure shall be painted externally with Shade No., 692 of IS:5 and internally with brilliant white of semi-glossy finish of IS:5.
5.2.	Configuration	Each LDB shall accommodate the following: 5.2.1. One incoming, 4-pole (3 phase and neutral) isolating switch with MCB of appropriate current rating. 5.2.2. 3-phase and neutral bus bars of appropriate current rating. 5.2.3. 4 Pole outgoing MCBs of appropriate rating 5.2.4. Cable lugs, compression type cable glands, name plates, circuit numbers, earthing lugs, etc. to make the pillar complete in all respects. 5.2.5. 20% spare outlets shall be provided for outgoing feeders. 5.2.6. Three (3) Nos. indication lamps (Red, Yellow, Blue) shall be provided to indicate that the incoming supply is available. Similarly, 3 Nos. indication lamps shall be provided to indicate that the busbar is energised.

5.3.	Busbar	5.3.1. The busbars shall be suitable for short-time current rating of 40KA for 1 Sec. 5.3.2. The busbar temperature rise shall not exceed 35 Deg C over an ambient of 50 Deg C. 5.3.3. The LDBs shall be provided with a continuous busbar of 25 x 6 sq.mm (electrolytic copper) with suitable hardware for connection to the main grounding grid

6. MAIN EMERGENCY LIGHTING BOARD

6.1.	Construction	6.1.1. Metal-clad enclosure with minimum 2 mm CRCA sheets for load-bearing members and 1.6 mm for non load-bearing members suitably reinforced with structural. 6.1.2. All cables shall enter from the bottom. 6.1.3. The degree of protection for the LDB shall be IP-54. 6.1.4. The enclosure shall be painted externally with Shade No., 692 to IS:5 and internally with brilliant white of semi-glossy finish to IS:5.
6.2.	Configuration	6.2.1. Each Board shall accommodate the followings: 6.2.2. Automatic changeover contactor. 6.2.3. Voltage sensing relays. 6.2.4. Time delay relay. 6.2.5. Bus Bars. 6.2.6. Two pole MCBs of adequate ratings for incoming and outgoing feeders. 6.2.7. Test switch, push button type. 6.2.8. Indicating lamps, ac - Green, dc - Red. 6.2.9. Terminals for remote indication 6.2.10. Cable lugs, compression type cable glands, name-plates, circuit numbers, earthing lugs and remote indication wiring upto substation 415V a.c. control board, to make the board complete in all respects.
6.3.	Changeover facility	The main emergency lighting board shall have an automatic changeover switch to energise the dc lighting system in the event of AC power failure. It shall have voltage-sensing relays to perform the changeover automatically when AC voltage of any one phase falls below 60 percent of 240 volts and continues at that low level for more than 10 seconds. These shall changeover from DC to AC again when 70 percent of 240 volt is restored and this continues for 10 seconds.
6.4.	Emergency Lighting Pillar	Local Emergency Lighting Pillar shall be identical in details to Lighting Distribution Pillar specified in clause 4 except that it shall have two pole isolating switch fuse unit on the incoming side and only two busbars and shall be without neutral links.

7. LUMINAIRES

7.1.	Luminaires type	Luminaires for use in normal and emergency illumination systems in the substation shall be suitable for LED lamps. All the luminaires shall be supplied complete with all accessories and lamps. The LED lamps ratings shall be adequate to achieve the required Lux level and calculation for number of luminaires shall be in the bidder's scope.
7.2.	Flood lights	The flood light luminaires in the substation shall be fixed at suitable height on the substation structures/ building, so as to provide the specified minimum illumination in the substation area without causing any glare to the operational/ maintenance staff working in the substation. While fixing the luminaires it shall be ensured that the stipulated electrical clearances are not violated. The Contractor shall supply and install suitable type of non-mettalic street light poles or octagonal galvanished poles required for installing the fittings for illuminating the roads, fence boundary wall etc.
7.3.	Reliability	Substation lighting circuits shall be divided into two or three sections and provided with time switches of suitable ratings.
7.4.	Design features for Outdoor Luminaires	
7.5.	Fixture	7.5.1. The luminaries housing shall be either extruded or pressure die casted aluminium of minimum 1.6 mm thickness. Body must be Corrosion Resistant Powder Coated and UV resistant. 7.5.2. The entire housing shall be dust and waterproof having Ingress protection of housing as IP65 or above as per IEC 60529. 7.5.3. Luminaire should be covered with suitable Glass or diffuser with high Transitivity. All luminaires shall be supplied with either clear toughened glass or clear polycarbonate cover for better IP retention and higher life. 7.5.4. Timers for Outdoor luminaries shall be in Scope of Vendor.
7.6.	LED	7.6.1. The luminous efficacy of LED luminaire shall be at least 85 lumen/watt. 7.6.2. LED module efficacy shall not be less than 90 percent of the rated LED module Efficacy. 7.6.3. Color Rendering Index (CRI) shall be at least 70 7.6.4. Color Temperature shall be 5500-6500K 7.6.5. Uniformity Emin/Eavg> 0.4, Emin/Emax>0.33
7.7.	LED Driver	LED driver shall have following features: 7.7.1. LED driver shall be applicable for Power supply 240V AC±10%, at 50Hz+3% / -5%. 7.7.2. Output voltage of the driver shall bedesigned to meet the Power Requirementsof the system.

		7.7.3. Power factorofcompletefitting shall bemorethan 0.90atfull load. 7.7.4. Total Harmonic Distortion (THD) shall be< 10 %
7.8.	General Requirements	7.8.1. The connecting wires used inside the Luminaire, shall be low smoke halogen free, fire retardant e-beam cable and fuse protection shall be provided in input side. 7.8.2. The lumen maintenance of a11 the LED fixtures shall not be less than70% after 50,000 hours. 7.8.3. Built in protection features for Short circuit, Surges (at least upto 5kV), and overvoltage shall be provided. 7.8.4. High /Low voltage cut-off shall be provided. 7.8.5. The whole luminaire shall be eco-friendly green technology based i.e. mercury free. 7.8.6. No UV and IR radiations shall be produced. 7.8.7. Access of driver for maintenance shall be provided at the top/side of the luminaire fixture. 7.8.8. All fasteners must be of stainless steel.

8. JUNCTION BOXES/WALL BOXES

8.1.	Size	100 mm x 100 mm junction boxes and wall boxes of standard size shall be provided.
8.2.	Construction	Wall boxes and junction boxes shall be made of FRP with a thickness of 2.0mm. Necessary conduit termination fittings such as bushings, locknuts etc. also be provided.

9. AUTOMATIC LIGHTING CONTROLLER

9.1.	Size	Contractor shall provide microprocessor based automatic lighting controller for controlling switching arrangement of indoor and outdoor lighting. The controller shall have provision of setting 52 week ON / OFF time as per astronomical clock or as per user requirement. All abnormal events shall be recorded in the controller. Secure / Genus or equivalent are approved makes.

10. SOCKETS & SWITCHES

10.1.	Indoor	All sockets and switches shall be modular and universal type suitable for 5/15A
10.2.	Outdoor	Two nos transformer oil filtration sockets shall be provided, one at each transformer bay. These sockets shall be three phase industrial type and rated for 100A.

11. NAMEPLATE & MARKING

11.1.	Name plate details of LED housing	Followings shall be clearly engraved/embossed on the die cast housing of LED: Rated voltage or voltage range (marked 'V' or 'Volt'); 11.1.1. Rated current (marked A' or 'Ampere'); 11.1.2. Rated wattage (marked 'W' or 'Watts'); 11.1.3. Rated frequency (marked in 'Hz') 11.1.4. Rated lumen 11.1.5. Indian/International Standards to which it is manufactured 11.1.6. Month and year manufacture 11.1.7. Customer Name - BSES Yamuna / Rajdhani Power Ltd 11.1.8. Fitting serial number 11.1.9. PO no and date 11.1.10. Guarantee period
11.2.	Panel nameplate and marking details	
11.2.1.	Panel nameplate	Panel shall have a nameplate clearly indicating the following: 11.2.1.1. Panel Serial No.- 11.2.1.2. Customer Name - BSES Yamuna/ Rajdhani Power Ltd 11.2.1.3. PO No. & date - 11.2.1.4. Panel Name - 11.2.1.5. Current rating - 11.2.1.6. Guarantee period -
11.2.2.	Feeder nameplate	Large and bold name plate carrying the feeder identification shall be provided on the top of each module.
11.2.3.	Danger plate	Panel shall have a danger plate of anodized Aluminium clearly indicating the danger logo and voltage details.
11.2.4.	Material	Anodized Aluminium 16SWG. Nameplates shall be satin silver in colour with black letters engraved on them. Stickers are not allowed.
11.2.5.	Fixing	All nameplates shall be riveted to the panels at all four corners. Bolting/screwing is not acceptable.

12. APPROVED MAKE OF COMPONENTS

12.1.	Relays	ABB/Jyoti/Omran
12.2.	HRC Fuse Links	GE/ Siemens/ L&T
12.3.	AC Contractors/ DC contactor	L&T/Siemens/Telemechanique/GE/ABB

12.4.	Terminals	Connectwell/Elmex/Wago/Phoenix
12.5.	Push buttons / Actuator	L&T/Siemens/Vaishno/Schneider
12.6.	MCB	Legrand/Hager/Schneider/ABB
12.7.	LED	NICHIA/ OSRAM/ CREE/ PHILIPS//EDISON
12.8.	Luminaire fittings	GE/Philips/Crompton/Bajaj
12.9.	Indicating lamps	Vaishno/Binay/Teknic/Siemens/Mimic/C&S

13. INSPECTION & TESTING

13.1.	Type test	All Equipment should be of type tested quality only, type test certificate to be submitted along with offer. If the manufacturer's lab is accredited by govt. / authorized body then it shall be acceptable for type testing.
13.2.	Acceptance & Routine tests	As per relevant Indian standard

14. DEVIATION

14.1.	Deviation	Deviations from this Specification shall be stated in writing with the tender by reference to the Specification clause/GTP/Drawing and a description of the alternative offer. In absence of such a statement, it will be assumed that the bidder complies fully with this specification. No deviation will be acceptable post order.

BSES

Technical Specification

Of

HT Indoor Switchgear (33 & 11 kV)

Specification no – BSES-TS-66-HTSWG-R0

Rev:		0
Date:		22 Jun 2022
Prepared by	Abhishek Harsh	
	Hemanshi Kaul	
Reviewed by	Srinivas Gopu	
	Abhinav Srivastava	
Approved by	Gaurav Sharma	
	Gopal Nariya	

INDEX

1 SCOPE OF SUPPLY 3
2 CODES & STANDARDS 3
3 SERVICE CONDITION 4
4 PANEL CONSTRUCTION 4
5 CIRCUIT BREAKER 6
6 FUNCTIONAL REQUIREMENTS 7
7 SURGE SUPPRESSOR 10
8 CURRENT TRANSFORMER 10
9 POTENTIAL TRANSFORMER 10
10 FEEDER AND BUS EARTHING 10
11 EQUIPMENT EARTHING 11
12 METERS 11
13 INDICATION, ALARMS & ANNUNCIATION 12
14 SELECTOR SWITCHES & PUSH BUTTONS 14
15 INTERNAL WIRING 14
16 TERMINAL BLOCKS 15
17 RELAYS 16
18 SYNCH CHECK PHILOSOPHY 28
19 ETHERNET SWITCHES & FIBRE OPTICS 29
20 SPACE HEATERS 30
21 SOCKETS, SWITCHES ,ILLUMINATION LAMPS & MCBs 30
22 NAMEPLATES AND MARKING 31
23 SURFACE TREATMENT & PAINTING 32
24 APPROVED MAKES OF COMPONENTS 32
25 INSPECTION , TESTING & QUALITY ASSURANCE 33
26 PACKING 34
27 SHIPPING 35
28 HANDLING AND STORAGE 35
29 DEVIATION 35
30 ACCESSORIES & TOOLS 36
31 DRAWINGS & DATA SUBMISSION MATRIX 36
ANNEXURE – A - SCOPE OF SUPPLY 39
ANNEXURE – B – TRANSFORMER MONITORING CUM AVR RELAY 40
ANNEXURE – C - TECHNICAL PARTICULARS 43
ANNEXURE – D - GUARANTEED TECHNICAL PARTICULARS (DATA BY BIDDER) 47
ANNEXURE – E – SPARES REQUIREMENT 48
ANNEXURE – F – SLDs 48

DocUUID : 23f7dc1d-9724-406f-b48e-bdff68bb2c4f

1 SCOPE OF SUPPLY

a. This specification covers the design, manufacture, testing, supply, erection & commissioning of 33kV and 11kV, Air Insulated, metal-enclosed and factory assembled switchgear.

b. This specification shall be used in conjunction with all specifications, switchgear data sheets, single line diagrams, and other drawings attached to the specification / purchase requisition.

2 CODES & STANDARDS

Materials, equipment and methods used in the manufacture of switchboards shall conform to the latest edition of following

2.1	Indian Electricity Rules 1956	Latest edition
2.2	Indian Electricity act 1910	Latest edition
2.3	Switchgear and control gear	IEC : 60694, IEC: 60298, IEC : 62271-200, IEC : 60529, IS: 3427, IS: 12729, IS: 12063, IS: 13947, IS: 9046
2.4	Circuit breaker	IEC 62271 - 100, IS 13118, IS 2516
2.5	Isolators & earthing switches	IEC 62271 - 102
2.6	Current transformers	IS:2705, IEC:60185
2.7	Voltage transformer	IS:3156, IEC:60186,
2.8	Indicating Instruments	IS:1248
2.9	Energy meters	IS 13010
2.10	Relays	IS:8686, IS:3231, IS:3842
2.11	Control switches and push buttons	IS 6875
2.12	HV fuses	IS 9385
2.13	Arrangement of Switchgear bus bars, main connections and auxiliary wiring	IS:375
2.14	Code of practice for phosphating iron & steel	IS 6005
2.15	Colours for ready mixed paints	IS 5
2.16	Code of practice for installation and maintenance of switchgear	IS 3072

DocUUID : 23f7dc1d-9724-406f-b48e-bdff68bb2c4f

3 SERVICE CONDITION

3.1	Max Ambient Temperature	50 deg C
3.2	Max Daily average ambient temp	40 deg C
3.3	Min Ambient Temp	0 deg C
3.4	Maximum Humidity	95%
3.5	Minimum Humidity	10%
3.6	Maximum annual rainfall	750 mm
3.7	Average no of rainy days per annum	60
3.8	Rainy months	June to Oct
3.9	Altitude above MSL	300 M
3.10	Seismic Zone	IV

4 PANEL CONSTRUCTION

4.1	Enclosure Type	Free standing, Indoor, Fully compartmentalised, Metal clad, Vermin proof
4.2	Enclosure degree of protection	IP 4X for high voltage compartment IP 5X for low voltage compartment
4.3	Enclosure material	Pre-Galvanized CRCA steel
4.3.1	Load bearing members	2.5 mm thick
4.3.2	Doors and covers	2.0 mm thick
4.3.3	Gland plate	3.0 mm MS for multicore and 5. 0 mm Aluminium for single core cables. All gland plates should be detachable type with gasket
4.4	Dimension of Panel	Maximum 2700mm, Operating height maximum 1600mm. In case of Extension of Existing make panels, vendor shall match the dimension of existing panel.
4.5	Extensibility	On either side
4.6	Separate Compartments for	Bus bar, Circuit Breaker, HV incoming cable, HV outgoing cable, PT, LV instruments & relays
4.7	Transparent inspection window	For cable compartment at height of cable termination.
4.8	Bus end cable box	For direct cable feeder from bus
4.9	Rear Doors	Rear doors shall not be interlocked i.e. all door opening shall be independent to each other.

DocUUID : 23f7dc1d-9724-406f-b48e-bdff68bb2c4f

4.10	Breaker compartment door	Separate, with lockable handle (Design with breaker trolley as the front cover is not acceptable). Door of one panel should not cause hindrance for opening of adjacent panel.
4.11	Inter compartmental connections	
4.11.1	Breaker to bus bar compartment	Through seal-off bushings
4.11.2	Breaker to cable compartment	Through seal-off bushings
4.12	Nut Bolt	Shall be as less as possible for ease of opening of compartments
4.13	Pressure relief devices	To be provided for each HV compartment
4.14	Bus support insulator	Non-hygroscopic, track-resistant, high strength, Epoxy insulators (Calculation for validating dynamic force withstand capability to be submitted during detailed engineering)
4.15	Fixing arrangement	Doors - Concealed hinged, door greater than 500mm shall have minimum three sets of hinges Covers - SS bolts Gasket - Neoprene
4.16	Required HV cable termination height in the cable compartment	650 mm for 11 KV. 1000mm for 33 KV
4.17	Panel Base Frame	Steel Base frame as per manufacturer's standard.
4.18	Handle	Removable bolted covers with handle for cable chamber and busbar chamber. Panel no./identification to be provided on cable box cover also.

DocUUID : 23f7dc1d-9724-406f-b48e-bdff68bb2c4f

4.19	APFC	a. Controlling of Capacitor Banks' switching shall be done by APFC. Although APFC shall not be in bidder's scope, Space for cut out shall be provided in the Capacitor panel. Space requirement-150X150 mm^2 b. Wiring of Bus PT , Incomer CT and Capacitor CT upto spare terminal for APFC shall also be provided in Capacitor Panel
4.20	Technical particulars	As per Annexure –C

5 CIRCUIT BREAKER

5.1	Type	Truck or cassette type
5.2	Mounting	On withdrawable truck or carriage, with locking facility in service position.
5.3	Switching duty	c. Transformer (oil filled and dry type) d. Motor (of small and large ratings – DOL starting with starting current 6 to 8 times the full load current & with a maximum of 3 starts per hour) e. Underground cable with length up to 10 km
5.4	Interrupting medium	Vacuum
5.5	Contact	Tulip contact shall be provided without any gap between contacts
5.6	Breaker operation	Three separate identical single pole units operated through the common shaft
5.7	Operating Mechanism	Re-strike free, Trip free, with electrical anti-pumping feature
5.7.1	Type	Motor wound, spring charged, stored energy type with manual charging facility
5.7.2	Operation on supply failure	One O-C-O operation possible after failure of power supply to the spring charging motor
5.8	Breaker indications & push buttons	

DocUUID : 23f7dc1d-9724-406f-b48e-bdff68bb2c4f

5.8.1	ON/ OFF / Emergency trip push button	a. Manual / mechanical. b. Emergency Off push button should be provided with a protective flap. c. Mechanical ON shall have padlocking facility.
5.8.2	Mechanical ON – OFF indication	On breaker trolley front
5.8.3	Operation counter	On breaker trolley front
5.8.4	Test-service position indicator	On breaker trolley front
5.8.5	Mechanism charge / discharge indicator	On breaker trolley front
5.9	Breaker positions	Service, Test and Isolated
5.10	Inter changeability	Possible, only with breaker of same rating
5.11	Breaker Control	On panel front only
5.12	Handle	Breaker shall be provided with handles for easy handling, rack in–out operation and manual spring charging as applicable.
5.13	Pin Sequence and Configuration of Pin of Adaptor Plug	(a) Pin sequence and No of Pins of Adaptor plug shall be same in Outgoing and Capacitor Panel (b) Pin sequence and No of Pins of Adaptor plug shall be same in Incoming and Bus Coupler Panel
5.14	Technical particulars	As per Annexure-C

6 FUNCTIONAL REQUIREMENTS

6.1	Interlocks	
6.1.1	Breaker compartment door opening	Opening of door and rack out to test/isolated position should be possible with breaker in OFF position only.
6.1.2	Breaker compartment door closing	Should be possible even when breaker is in isolated position
6.1.3	Racking mechanism safety interlock	Mechanical type
6.1.4	Racking in or out of breaker inhibited	When the breaker is closed

DocUUID : 23f7dc1d-9724-406f-b48e-bdff68bb2c4f

6.1.5	Racking in the circuit breaker inhibited	Unless the control plug is fully engaged
6.1.6	Disconnection of the control plug inhibited	As long as the breaker is in service position
6.1.7	Opening of cable compartment cover of Incomer Panels inhibited	As long as cable end is alive
6.2	Safety Devices	
6.2.1	Exposure to live parts	In case the breaker panel door is required to be opened during a contingency, the personnel should not be exposed to any live part. Suitable shrouds/barriers/insulating sleeves should be provided.
6.2.2	Breaker handing	In case the breaker is mounted on a carriage which does not naturally roll out on the floor, a trolley for handling the breaker is to be provided.
6.3	Operation of breaker	In either service or test position
6.3.1	Closing from local	Only when local/remote selector switch is in local position
6.3.2	Closing from remote	Only when local/remote selector switch is in remote position
6.3.3	Tripping from local	Only when local/remote selector switch is in local position
6.3.4	Tripping from remote	Only when local/remote selector switch is in remote position
6.3.5	Tripping from protective relays	Irrespective of position of local/remote switch
6.3.6	Testing of breaker	In test or isolated position keeping control plug connected
6.4	Safety shutters.	

DocUUID : 23f7dc1d-9724-406f-b48e-bdff68bb2c4f

6.4.1	Automatic safety shutter for female primary disconnects	To fully cover contacts when breaker is withdrawn to test. Independent operating mechanism for bus bar & cable side shutters, separately pad-lockable in closed position.
6.4.2	Label for identification	For Bus side and cable side shutters
6.4.3	Warning label on shutters of incoming and other connections	Clearly visible label "Isolate elsewhere before earthing" be provided
6.5	Breaker electrical operation features	
6.5.1	Trip circuit supervision	To be given for breaker close & open condition
6.5.2	Trip circuit supervision relay contact	For indication, alarm & to inhibit closing of breaker
6.5.3	Emergency trip push button contact	Wired directly to trip coil (wired to Master trip relay if second trip coil provided)
6.5.4	Emergency trip push button contact	Wired to inhibit closing of breaker
6.5.5	Master trip relay contact (if given)	Wired to inhibit closing of breaker
6.5.6	Tripping or opening of breaker through relay but not routed through Lockout (Example- SCADA Opening, Undervoltage, Overvoltage)	Wired to Contact multiplication Relay and then from CMR to tripping of breaker
6.5.7	Closing of breaker through relay	Wired to Contact multiplication Relay and then from CMR to closing of breaker
6.6	DC control supply bus in all panels	Fed by two DC incoming sources in Bus coupler panel with auto changeover facility
6.7	PT supply bus in all panels	Fed normally by bus PT with automatic changeover facility to incomer line PT
6.8	Flaps for Internal Arc Protection	Flaps shall not have any pores/ opening during normal operation

DocUUID : 23f7dc1d-9724-406f-b48e-bdff68bb2c4f

7 SURGE SUPPRESSOR

7.1	Provision	To be provided in all panels except bus coupler and BPT.
7.2	Type	Gapless, metal oxide type
7.3	Technical particulars	As per Annexure -C

8 CURRENT TRANSFORMER

8.1	Type	Shall be cast resin type with insulation class of E or better.
8.2	Rating and technical particulars	As per Annexure – C (Technical particulars) and Annexure – F (SLDs)
8.3	CBCT	If specified, bidder shall clearly mention his proposal for mounting the same.

9 POTENTIAL TRANSFORMER

9.1	Type	Shall be cast resin type with insulation class of E or better.
9.2	Rating and technical particulars	As per Annexure – C (Technical particulars) and Annexure – F (SLDs)
9.3	Mounting	It shall be mounted on a withdrawable carriage. Mounting of PT on the breaker truck is not acceptable. Mounting of PT on the panel top is also not acceptable. Primary PT fuse shall be easily accessible.
9.4	Neutral	The HV neutral connection to earth shall be easily accessible for disconnection during HV test.

10 FEEDER AND BUS EARTHING

10.1	Earthing arrangement	Through separate earthing truck for bus & feeder
10.2	Short time withstand capacity of earthing truck	Equal to rating of breaker. Refer technical parameters.
10.3	Operation from front	Mechanically operated by separate switch.

DocUUID : 23f7dc1d-9724-406f-b48e-bdff68bb2c4f

10.4	Interlocks and Alarm	To prevent inadvertent closing on live circuit, with padlocking arrangement to lock truck in close or open position.

11 EQUIPMENT EARTHING

11.1	Material of earthing bus	Aluminium
11.2	Earthing Bus Position	It shall run through whole switchgear passing nearer to Power Cable Position
11.3	Earth bus joints	All bolted joints in the bus should be made by connection of two bolts.
11.4	Rating	Sized for rated short circuit current for 3 seconds
11.5	Enclosure & non -current carrying part of the switchboard / components	Effectively bonded to the earth bus.
11.6	Hinged doors	Earthed through flexible copper braid
11.7	Circuit breaker frame /carriage	Earthed before the main circuit breaker contacts/ control circuit contacts are plugged in the associated stationary contacts
11.8	Metallic cases of relays, instruments and other LT panel mounted equipment	Connected to the earth bus by independent copper wires of size not less than 2.5 sq. mm with green colour insulation. For this purpose LT compartment should have a clear designated earth bus to which earth connections from all components are to be connected.
11.9	CT and PT neutral	Earthed at one place at the terminal blocks through links.

12 METERS

12.1	Mounting	Flush mounted
12.2	Multifunction Meter	
12.2.1	SCADA Interfacing	RS485 rear port suitable for integration on Modbus Protocol
12.2.2	Size	96x96 mm^2

DocUUID : 23f7dc1d-9724-406f-b48e-bdff68bb2c4f

12.2.3	Panels where to be provided	All panels except Bus PT Panel
12.2.4	Accuracy Class	0.2
12.2.5	Signal List	R-Ph Current, Y-Ph Current, B-Ph Current, Neutral Current, R-Y Ph Voltage, Y-B Ph Voltage, B-R Ph Voltage, Active Power, Active Energy, Reactive Power, Power Factor, Max Demand, Phase angle 1, Phase angle 2, Phase angle 3, THD Mean Current, THD Mean Voltage
12.2.6	Data Type	MFI
12.2.7	Compatibility with RTU	ABB 560
12.2.8	Programmability	CT secondary shall be programmable i.e for both 1 A and 5 A
12.2.9	Auxiliary Supply	a. 48 – 240VDC and AC i.e universal type. b. Although in Scheme, MFM must be wired up with DC only
12.3	Voltmeter	Digital type with programmable ratio
12.3.1	Size	96x96 mm^2
12.3.2	Panels where to be provided	Incomer and bus PT panel
12.3.3	Voltmeter switch	Inbuilt in meter
12.3.4	Accuracy Class	1.0
12.4	Energy meter provision	Energy meter is not in supplier's scope. Only space and CT/PT wiring is to be provided in all panels except bus coupler and bus PT. Space for Energy meter shall be 200(w) X 350(h) mm^2

13 INDICATION, ALARMS & ANNUNCIATION

13.1	Indications	Flush mounted, High intensity, clustered LED type
13.1.1	Breaker ON	Red
13.1.2	Breaker Off	Green
13.1.3	Spring Charged	Blue
13.1.4	DC control supply fail	Amber
13.1.5	AC control supply fail	Amber
13.1.6	Auto trip	Amber
13.1.7	Test Position	White
13.1.8	Service Position	White

DocUUID : 23f7dc1d-9724-406f-b48e-bdff68bb2c4f

13.1.9	Heater circuit healthy	Yellow (Indication with integrated push button for checking)
13.1.10	Trip circuit healthy	White
13.1.11	PT supply as applicable	R,Y B
13.2	Annunciator (For 33kV Panels only)	
13.2.1	Type	Static type alongwith alarm. Annunciations shall be repetitive type and shall be capable of registering the fleeting signal. Fascia test facility should also be provided.
13.2.2	Note	LED type indications may not be provided for alarm signals provided on annunciator.
13.2.3	Mounting	Flush mounted
13.2.4	Fascia	12 window
13.2.5	Signals to provided on Fascia	Window 1 – Main Protection Operated (Distance /Differential) Window 2 – Backup O/C & E/F Protection Operated Window 3 – LBB operated Window 4 – CB Autotrip Window 5 – Trip Circuit Unhealthy Window 6 – DC Fail Window 7 – AC Fail Window 8 – VT Fuse Fail Window 9 – Protection Relay Faulty
13.2.6	Push Buttons	For test, accept and reset
13.2.7	Potential Free Contacts	To be provided for event logger
13.3	Alarm scheme with isolation switch	a. For DC fail, TC fail and CB auto trip in 11kV panels b. For all signals wired to annunciator in 33kV panels

DocUUID : 23f7dc1d-9724-406f-b48e-bdff68bb2c4f

Sequence of operation of the annunciator shall be as follows-

S No.	Alarm Condition	Fault Contact	Visual Annunciation	Audible Annunciation
a.	Normal	Open	Off	Off
b.	Abnormal	Close	Flashing	On
c.	Accept	Close	Steady on	Off
d.	Return to normal	Open	Steady On	Off
e.	Reset	Open	Off	Off
f.	Reset before return to normal	Close	Flashing	On

14 SELECTOR SWITCHES & PUSH BUTTONS

14.1	Selector switches	Flush mounted on LV compartment door, with shrouded terminals
14.1.1	TNC switch with pistol grip	Lockable, spring return to normal position
14.1.2	Local / SCADA selector switch	2 pole Lockable Switch
14.1.3	Rotary ON/OFF switches	For heater / illumination circuit
14.1.4	Rating	16 A
14.2	Push Button	Flush mounted on LV compartment door, with shrouded terminals
14.2.1	Emergency trip push button	Red color with stay put
14.2.2	Accept push buttons	Black color – Trip alarm / DC fail alarm
14.2.3	Reset push buttons	Yellow color – Trip alarm / DC fail alarm
14.2.4	Rating	10 A

15 INTERNAL WIRING

15.1	Internal wiring	1100 V grade, PVC insulated (FRLS) stranded flexible copper wire.
15.2	Size	2.5 sq mm for CT circuit, 1.5 sq mm for PT & control circuits
15.3	Colour code	
15.3.1	CT & PT	R Ph – Red Y Ph – Yellow B Ph – Blue Neutral – Black

DocUUID : 23f7dc1d-9724-406f-b48e-bdff68bb2c4f

15.3.2	Others	DC– grey, AC-black, Earth – green
15.4	Ferrules	At both ends of wire
15.5	Ferrule type	Interlocked type (one additional red colour ferrule for all wires in trip circuit)
15.6	Lugs	Tinned copper, pre-insulated, ring type, fork type and pin type as applicable. CT circuits should use ring type lugs only.
15.7	Spare contacts	Spare contacts of relays and contactors etc. should be wired upto the terminal block.
15.8	Wiring enclosure	Plastic channels, Inter panel wiring through PVC sleeves
15.9	Interpanel wiring	Wires with ferrule to be terminated in the adjacent shipping section should be supplied with one end terminated and the other end bunched and coiled.
15.10	Auxiliary supply	Auxiliary bus wiring for AC and DC supplies, voltage transformer circuits, annunciation circuits and other common services shall be provided on the same set of terminals in all the panels with proper segregation.

16 TERMINAL BLOCKS

16.1	Rating and Type	1100 V grade, moulded piece, stud type screw driver operated terminals complete with insulated barriers, washers, nuts and lock nuts.
16.2	Segregation	TBs shall be segregated.
16.3	Suitability	Terminal Block shall be Stud Type Screw Driver Operated suitable for 6sqmm control cable. Disconnecting facility shall be provided in CT and PT terminal. Shorting and Earthing facility shall be provided in CT
16.4	Marking and covers	White fibre markings strip with clear plastic, slip-on / clip-on terminal covers to be provided.
16.5	Disconnecting Facility	To be provided in CT and PT terminals

DocUUID : 23f7dc1d-9724-406f-b48e-bdff68bb2c4f

16.6	Shorting & Earthing Facility	To be provided in CT Terminals
16.7	Spare Terminals	20% in each TB row
16.8	Spare Terminal Block in Capacitor Bank Panel	Separate Terminal Block with 50 number terminals required (20 Numbers Disconnecting and 30 Number Non Disconnecting type)
16.9	TB shrouds & separators	Moulded non- inflammable plastic material
16.10	Clearance between 2 sets of TB	100 mm min
16.11	Clearance with cable gland plate	250 mm min
16.12	Clearance between AC / DC set of TB	100 mm min
16.13	Test terminal blocks	Screw driver operated stud type for metering circuit

17 RELAYS

17.1	Protection Relays – General Features	
17.1.1	Technology and Functionality	Numerical , microprocessor based with provision for multifunction protection, control, metering and monitoring
17.1.2	Mounting	Flush Mounting, IP5X
17.1.3	Architecture	Hardware and software architecture shall be modular and disconnectable to adapt the protection and control unit to the required level of complexity as per the application.
17.1.4	Programming and configuration	Relay shall utilize a user friendly setting and operating multi-lingual software in windows environment with menus and icons for fast access to the data required. Programming software and communication cord for offered relays should be included in scope of supply.
17.1.5	Conformal Coating	a. Required on all cards and Components to protect against moisture, dust, chemicals, temperature extremes etc b. Testing shall be as per IEC 60068-2-60

DocUUID : 23f7dc1d-9724-406f-b48e-bdff68bb2c4f

17.1.6	SCADA Interface port	LC type Dual fibre optic port for interfacing with SCADA on IEC 61850 & PRP compatible. Through this port relays shall be connected to Ethernet switches..
17.1.7	Processing Indications	SCADA functions for monitoring shall be executed on SPI (Single Point Input) and DPI (Double Point Input). DPI shall only be used in case of Isolator and Circuit breaker “close” and “open” indication.
17.1.8	Command Processing	Functionality of command processing offered for SCADA interface shall include the processing of single and double commands i.e SCO (Single Command Output) and DCO (Double object command Output). DCO shall only be used in case of Isolator and Circuit Breaker “close” and “open” command.
17.1.9	PC Interface port	Front port (preferably serial) for configuration/data downloads using PC. Cost of licensed software and communication cord, required for programming of offered protection relays shall be included in the cost of switchgear.
17.1.10	User Interface	An alphanumeric key pad and graphical LCD display with backlight indicating measurement values and operating messages. It should be possible to access and change all settings and parameters without the use of PC.
17.1.11	SCADA Interface	Relay shall communicate all measured & monitored parameters, analog signals, event record, fault record, DIs , DOs etc to SCADA
17.1.12	Relay Characteristics	Relay shall integrate all necessary protections for different applications in accordance with IS and IEC. Relay shall provide wide setting ranges and choice of all IEC, IEEE and other tripping curves through a

DocUUID : 23f7dc1d-9724-406f-b48e-bdff68bb2c4f

		minimum of two setting groups.
17.1.13	GOOSE Messaging	Relays shall communicate all status signals, commands and events on GOOSE messaging.
17.1.14	Event and Fault records	Relay shall have the facility of recording of various parameters during event/fault with option to set the duration of record through settable pre fault and post fault time. Relay shall store records for last 10 events and 10 faults (minimum). It should be possible to download records locally to PC and remotely to SCADA.
17.1.15	Self diagnosis	Relay shall be able to detect internal failures. A watchdog relay with changeover contact shall provide information about the failure.
17.1.16	Time synchronization	All relays shall be capable of being synchronized with the system clock using SCADA interface and PC.
17.1.17	Operation Indicators	LEDs with push button for resetting.
17.1.18	Test Facility	Inbuilt with necessary test plugs.
17.2	Protection Relays for 11kV Incomer panel	
17.2.1	Relay 1	3-phase Directional Overcurrent and Earthfault protection with IDMT, Definite time and instantaneous characteristics
		Undervoltage and overvoltage protection
		Trip Circuit Supervision
		Sync Check function
		PT supervision (fuse failure monitoring)
		Relay shall communicate all measured and monitored parameters like current, voltage, active power, reactive power, apparent power, power factor, phase angle, event record, fault record, DIs ,

DocUUID : 23f7dc1d-9724-406f-b48e-bdff68bb2c4f

		DOs etc to SCADA
17.2.2	Relay 2	Auto Re-closer (If Specified in Tender document)
		High Impedance Restricted Earth fault protection.
17.2.3	User Configurable DIs and Dos	Relay-1 & 2 should have a total of 16 Dis and 10 Dos (minimum). Each relay should have atleast 2 Dis and 4 Dos
17.2.4	Note	Combining functions of Relay-1 and Relay-2 in single relay is not acceptable.
17.2.5	SLD	Refer annexure – F1
17.3	Protection Relays for 11kV Bus Section panel	
17.3.1	Relay 1	3-phase Overcurrent and Earthfault protection with IDMT, Definite time and instantaneous characteristics
		Sync Check function
		Trip Circuit Supervision
		PT supervision (fuse failure monitoring)
		User Configurable 16 Dis and 8 Dos (minimum)
		Relay shall communicate all measured and monitored parameters like current, voltage, active power, reactive power, apparent power, power factor, phase angle, event record, fault record, DIs , DOs etc to SCADA
		Auto Re-closer (If Specified in Tender document)
17.3.2	SLD	Refer annexure – F2
17.4	Protection Relays for 11kV Outgoing panel	
17.4.1	Relay 1	3-phase Overcurrent and Earthfault protection with IDMT, Definite time and instantaneous characteristics
		Trip Circuit Supervision
		User Configurable 12 Dis and 6 Dos (minimum)
		Relay shall communicate all measured and monitored parameters like current, voltage, active

DocUUID : 23f7dc1d-9724-406f-b48e-bdff68bb2c4f

		power, reactive power, apparent power, power factor, phase angle, event record, fault record, DIs , DOs etc to SCADA
		Auto Re-closer (If Specified in Tender document)
17.4.2	SLD	Refer annexure – F3
17.5	Protection Relays for 11kV Station Transformer panel	
17.5.1	Relay 1	3-phase Overcurrent and Earthfault protection with IDMT, Definite time and instantaneous characteristics
		Trip Circuit Supervision
		User Configurable 12 DIs and 6 DOs (minimum)
		Relay shall communicate all measured and monitored parameters like current, voltage, active power, reactive power, apparent power, power factor, phase angle, event record, fault record, DIs , DOs etc to SCADA
		Auto Re-closer (If Specified in Tender document)
17.5.2	SLD	Refer annexure – F4
17.6	Protection Relays for 11kV Capacitor panel	
17.6.1	Relay 1	3-phase Overcurrent and Earthfault protection with IDMT, Definite time and instantaneous characteristics
		Undervoltage and Overvoltage protection(From Bus PT)
		Trip Circuit Supervision
		Neutral Unbalance protection(From RVT associated to Cap Bank)
		Timer for on time delay (minimum 600 seconds)
		User Configurable 12 DIs and 6 DOs (minimum)
		Relay shall communicate all measured and monitored parameters like current, voltage, active power, reactive power, apparent power, power

DocUUID : 23f7dc1d-9724-406f-b48e-bdff68bb2c4f

		factor, phase angle, event record, fault record, DIs , DOs etc to SCADA
		Auto Re-closer (If Specified in Tender document)
17.6.2	SLD	Refer annexure – F5.
17.7	Protection Relays for 33kV Incomer	
17.7.1	Relay 1	Line differential protection (Dual channel, ST Port Compatible for Single Mode Fibre having wavelength 1310 nm)
		Distance Protection
		Software based CT ratio correction
		Dedicated port for communication with remote end relay through optical fibre. This port should be in addition to PC interface and SCADA interface ports.
17.7.2	Relay 2	Bay control unit having MIMIC with 3-phase Directional Overcurrent and Earthfault protection with IDMT, Definite time and instantaneous characteristics.
		Trip Circuit Supervision
		Sync check function
		Under Frequency, Over Frequency, Rate of Change of Frequency
		Circuit Breaker failure protection
		Reverse blocking function
		PT supervision
		Relay shall communicate all measured and monitored parameters like current, voltage, active power, reactive power, apparent power, power factor, phase angle, event record, fault record, DIs , DOs etc to SCADA
		Auto Re-closer (If Specified in Tender document)
17.7.3	User Configurable DIs and Dos	Relay-1 & 2 should have a total of 16 DIs and 12 DOs (minimum). Each relay should have atleast 2 DIs and 6 Dos

DocUUID : 23f7dc1d-9724-406f-b48e-bdff68bb2c4f

17.7.4	Note	Combining functions of Relay-1 and Relay-2 in single relay is not acceptable.
17.7.5	SLD	Refer annexure – F6
17.8	Protection Relays for 33kV Transformer Feeder Panel	
17.8.1	Relay 1	Biased differential protection
		REF protection
		Software based ratio and vector correction feature (without ICT)
		H2 and H5 harmonic restraint
17.8.2	Relay 2	Bay control unit having MIMIC with 3-phase Overcurrent and Earthfault protection with IDMT, Definite time and instantaneous characteristics
		Trip Circuit Supervision
		Under Frequency, Over Frequency, Rate of Change of Frequency
		Reverse Blocking function
		Circuit Breaker failure protection
		Relay shall communicate all measured and monitored parameters like current, voltage, active power, reactive power, apparent power, power factor, phase angle, event record, fault record, DIs , DOs etc to SCADA
		Auto Re-closer (If Specified in Tender document)
17.8.3	User Configurable DIs and DOs	Relay-1 & 2 should have a total of 16 DIs and 12 DOs (minimum). Each relay should have atleast 2 DIs and 6 DOs.
17.8.4	Note	Combining functions of Relay-1 and Relay-2 in single relay is not acceptable.
17.8.5	SLD	Refer annexure – F7
17.9	Protection Relays for 33kV Buscoupler Panel	
17.9.1	Relay 1	Bay control unit having MIMIC with 3-phase Overcurrent and earthfault protection with IDMT,

DocUUID : 23f7dc1d-9724-406f-b48e-bdff68bb2c4f

		Definite time and instantaneous characteristics.
		Trip Circuit Supervision
		Sync check function
		Reverse Blocking Function
		Circuit Breaker failure protection
		PT supervision (fuse failure monitoring) for Bus PT-1
		User Configurable 16 DIs and 8 DOs (minimum)
		Relay shall communicate all measured and monitored parameters like current, voltage, active power, reactive power, apparent power, power factor, phase angle, event record, fault record, DIs , DOs etc to SCADA
17.9.2	Relay 2	Under Frequency, Over Frequency, Rate of Change of Frequency
		PT supervision (fuse failure monitoring) for Bus PT-2
		Auto Re-closer (If Specified in Tender document)
17.9.3	SLD	Refer annexure – F8
17.10	Protection Relays for 33kV Outgoing Panel (For Installation at KCC Consumer Premises)	
17.10.1	Relay 1	Bay control unit having MIMIC with 3-phase Overcurrent and Earthfault protection with IDMT, Definite time and instantaneous characteristics
		Trip Circuit Supervision
		Reverse Blocking Function
		Under Frequency, Over Frequency, Rate of Change of Frequency
		Circuit Breaker failure protection
		User Configurable 12 DIs and 6 DOs (minimum)
		Relay shall communicate all measured and monitored parameters like current, voltage, active power, reactive power, apparent power, power

DocUUID : 23f7dc1d-9724-406f-b48e-bdff68bb2c4f

		factor, phase angle, event record, fault record, DIs , DOs etc to SCADA
		Auto Re-closer (If Specified in Tender document)
17.10.2	SLD	Refer annexure – F9
17.11	Protection Relays for 33kV Incomer from 66/33kV Autotransformer	
17.11.1	Relay 1	High Impedance Restricted Earth fault protection
17.11.2	Relay 2	Bay control unit having MIMIC with 3-phase Overcurrent and Earthfault protection with IDMT, Definite time and instantaneous characteristics
		Trip Circuit Supervision
		Under Frequency, Over Frequency, Rate of Change of Frequency
		Reverse Blocking Function
		Sync check function
		Undervoltage and overvoltage protection
		Circuit Breaker failure protection
		PT supervision (fuse failure monitoring)
		Relay shall communicate all measured and monitored parameters like current, voltage, active power, reactive power, apparent power, power factor, phase angle, event record, fault record, DIs , DOs etc to SCADA
		Auto Re-closer (If Specified in Tender document)
17.11.3	User Configurable DIs and DOs	Relay-1 & 2 should have a total of 16 DIs and 12 DOs (minimum). Each relay should have atleast 2 DIs and 6 Dos
17.11.4	Note	Combining functions of Relay-1 and Relay-2 in single relay is not acceptable
17.11.5	SLD	Refer annexure – F10
17.12	Protection Relays for 33kV Outgoing from 66/33kV Autotransformer	
17.12.1		Power swing blocking
	Relay 1	Line differential protection(Dual channel, ST Port

DocUUID : 23f7dc1d-9724-406f-b48e-bdff68bb2c4f

		Compatible for Single Mode Fibre having wavelength 1310 nm)
		Distance Protection
		Software based CT ratio correction
		Dedicated port for communication with remote end relay through optical fibre. This port should be in addition to PC interface and SCADA interface ports.
17.12.2	Relay 2	Bay control unit having MIMIC with 3-phase Overcurrent and Earthfault protection with IDMT, Definite time and instantaneous characteristics.
		PT Supervision
		Under Frequency, Over Frequency, Rate of Change of Frequency
		Trip Circuit Supervision
		Reverse Blocking Function
		Circuit Breaker failure protection
		Relay shall communicate all measured and monitored parameters like current, voltage, active power, reactive power, apparent power, power factor, phase angle, event record, fault record, DIs , DOs etc to SCADA
		Auto Re-closer (If Specified in Tender document)
17.12.3	User Configurable DIs and Dos	Relay-1 & 2 should have a total of 16 DIs and 12 DOs (minimum). Each relay should have atleast 2 DIs and 6 Dos
17.12.4	Note	Combining functions of Relay-1 and Relay-2 in single relay is not acceptable.
17.12.5	SLD	Refer annexure – F11
17.13	Protection Relays for 33kV Buscoupler for Switchboard of 66/33kV Autotransformer	
17.13.1	Relay 1	Bay control unit having MIMIC with 3-phase Overcurrent and earthfault protection with IDMT, Definite time and instantaneous characteristics.
		Trip Circuit Supervision

DocUUID : 23f7dc1d-9724-406f-b48e-bdff68bb2c4f

		Sync check function
		Circuit Breaker failure protection
		PT supervision (fuse failure monitoring) for Bus PT-1
		User Configurable 16 DIs and 8 DOs (minimum)
		Relay shall communicate all measured and monitored parameters like current, voltage, active power, reactive power, apparent power, power factor, phase angle, event record, fault record, DIs , DOs etc to SCADA
17.13.2	Relay 2	Under Frequency, Over Frequency, Rate of Change of Frequency
		PT supervision (fuse failure monitoring) for Bus PT-2
		Auto Re-closer (If Specified in Tender document)
17.13.3	SLD	Refer annexure – F12
17.14	Protection Relays – SCADA Interfacing	
17.14.1	Configuration and wiring of DIs in Protection Relays (All panels) for routing status signals to SCADA	DI-1 – TC-1 Healthy DI-2 – TC-2 Healthy DI-3 – CB Autotrip (contact from lockout relay) DI-4 – CB Open DI-5 – CB Close DI-6 – CB in service DI-7 – CB in test DI-8 – Spring Charged DI-9 – L/R switch Remote DI-10 – AC fail DI-11 – Adjacent Panel DC Fail/DC MCB Trip DI-12 – Adjacent Panel Protection Relay fail DI-13 – PT MCB trip (metering and protection, for incomer and capacitor panel only) Sequence of DIs should be strictly as mentioned above. Change in sequence of DIs will not be acceptable.
17.14.2	Configuration and wiring of	DO-1 – CB Open

DocUUID : 23f7dc1d-9724-406f-b48e-bdff68bb2c4f

	DOs in Protection relays (all panels) for execution of SCADA commands through SCADA interface port (refer clause 16.1.5).	DO-2 – CB close DO-3-Electrical Reset Sequence of DOs should be strictly as mentioned above. Change in sequence of DOs will not be acceptable.
17.14.3	Looping of numerical relays	All relays in the switchboard have to be looped to form a common bus for interfacing with SCADA.
17.14.4	Spare DIs and DOs	Should be wired upto terminal block for future use.
17.15	Transformer Monitoring cum AVR Relay	
17.15.1	Features	As per annexure –B
17.15.2	Requirement	To be provided in 33KV Transformer panel only
17.16	Auxiliary Relays – General Features	
17.16.1	Relays for auxiliary, supervision, trip and timer relays	Static or electromechanical type.
17.16.2	Reset mechanism for auxiliary relays	Self reset contacts except for lock-out relays.
17.16.3	Reset mechanism for lockout relays	Electrical reset type for 11kV outgoing panels only. Hand reset type for all other panels.
17.16.4	Operation indicators	With hand-reset operation indicators (flags) or LEDs with pushbuttons for resetting.
17.17	Auxiliary relays – Requirement	
17.17.1	Anti pumping (94), lockout (86),	a. For each breaker b. Lock Out Relay mounting shall be flush type on front side of Panel
17.17.2	PT selection relays	To be provided in bus coupler panel for selection between Bus PT and Line PT of respective sections.
17.17.3	Switchgear with two incomer & bus coupler	Lockout relay (86) contact of each incoming breakers to be wired in series in closing circuit of other incoming breakers & bus coupler.
17.17.4	Contact Multiplication Relay for Tripping and closing of Breaker	a. One for Tripping and one for closing with each breaker b. Current Rating shall be 30 percent more than closing and tripping coil current rating c. Shall be of closed type i.e. direct

DocUUID : 23f7dc1d-9724-406f-b48e-bdff68bb2c4f

		unauthorised access shall not be provided.
17.17.5	Auxiliary Relays, contact multiplication relays etc.	To effect interlocks and to exchange signals of status & control
17.17.6	Transformer trouble relays (For 33kV Transformer feeder panel only)	Auxiliary relays with indicating flags (contactors will not be accepted) should be provided for the following trip and alarm commands – a. Buchholz trip b. OSR trip c. PRV trip d. SPR trip e. WTI Trip f. OTI Trip g. Buchholz Alarm h. Low oil level alarm i. OTI Alarm j. WTI Alarm.
17.18	General Requirements for all relays/contactors	Auxiliary supply will be 50/220VDC based on requirement. All relays/contactors shall be suitable for continuous operation at 15% overvoltage.

18 SYNCH CHECK PHILOSOPHY

18.1	Dead Bus – Live Line	a. Application - Required for Charging of Bus from Line Supply b. Logic - Sync check relay installed on line panel will check the line and bus voltage and derive that the line is live and bus is in dead condition i.e bus has to be charged by the line breaker. Hence Sync check relay will allow the line breaker to close in this condition.
18.2	Dead Line – Live Bus	a. Application - Required for Charging of Line from Bus Supply b. Logic - Sync check relay installed on line panel will check line and bus voltage and derive that the line is dead and bus is in live condition i.e line has to charged from bus. Hence Sync check relay will allow the line breaker to close in this condition.

DocUUID : 23f7dc1d-9724-406f-b48e-bdff68bb2c4f

18.3	Live Bus – Live Line	a. Application - Required for paralleling of bus and line supply b. Logic - Sync check relay installed on line panel will compare magnitude and phase sequence of line and bus voltages. If the variations are within the range set in the relay, sync check relay will allow the closing of line breaker.
18.4	Live Bus – Dead Bus	a. Application – Required for charging of dead bus through another live bus. b. Logic – Sync check relay installed on bus coupler/bus section panel will check voltage of both buses and derive that one bus is dead and other bus is live i.e dead bus is being charged from live bus. Hence Sync check relay will allow the bus coupler/bus section breaker to close in this condition.
18.5	Live Bus – Live Bus	a. Application – Required for paralleling of two buses/bus sections. b. Logic – Sync check relay installed on bus coupler/bus section panel will compare the magnitude and phase sequence of voltage of both buses (or bus sections). If the variations are within the range set in the relay, sync check relay will allow the bus coupler/bus section breaker to close.

19 ETHERNET SWITCHES & FIBRE OPTICS

19.1	Ethernet Switch	
19.1.1	Numbers	Two at each site
19.1.2	FO Port	16 Nos
19.1.3	RJ 45 Port	4 Nos
19.1.4	Communication Protocol	IEC 61850
19.1.5	Network Protocol	PRP
19.1.6	Downlink Rate	100 MBPS
19.1.7	Uplink Rate	1 GBPS
19.1.8	Coating	Conformal
19.1.9	Power Supply Voltage	220 / 50 VDC as per site condition
19.1.10	Grade	Industrial
19.1.11	Certification required	KEMA,CE & FCC for IEC 61850 compliance
19.1.12	Operating Temperature	
19.1.13	Mounting	In Switchgear Panel
19.1.14	Blinking LED Indicators	On each RJ45 ports

DocUUID : 23f7dc1d-9724-406f-b48e-bdff68bb2c4f

19.1.15	Separate Maintenance/console Part	Required
19.1.16	Latency	Less than or equal to 10 ms
19.1.17	Fibre Optic Compatibility	Multimode, 1310 nm
19.1.18	Placement	Din Rail Arrangement Inside Switchgear
19.2	Fibre Optics (Patch Cord) and Ethernet cable	
19.2.1	Connection	From Relays, Meters to Ethernet Switch
19.2.2	Mode of Fibre Optics	Multimode
19.2.3	Wavelength	1310 nm
19.2.4	Ethernet Cable Type	CAT VI
19.2.5	Associated Connectors and Accessories	Required

20 SPACE HEATERS

20.1	Type	Thermostat controlled with switch for isolation
20.2	Location	In Breaker & HV cable compartment, mounted on an insulator. Heater position in cable compartment should be easily accessible after cable termination. Heater position in breaker chamber shall be accessible with breaker racked-in.

21 SOCKETS, SWITCHES ,ILLUMINATION LAMPS & MCBs

21.1	Illumination lamp with switch	For LV & cable chamber
21.2	Universal type (5/15 A) Socket with Switch	In LV chamber
21.3	MCBs	a. MCBs of Proper rating may be provided. b. Although Main MCB shall be directly wired up to Trip Circuit, No other MCB shall be provided in between c. Rating of MCB shall be 300% of full load current of relevant circuit

DocUUID : 23f7dc1d-9724-406f-b48e-bdff68bb2c4f

22 NAMEPLATES AND MARKING

22.1	Nameplates	To be provided as per the following description
22.1.1	Equipment Nameplates	a. All equipment mounted on front side as well as equipment mounted inside the panels shall be provided with individual name plates with equipment designation engraved. b. All front mounted equipment shall be also provided at the rear with individual name plates engraved with tag numbers corresponding to the one shown in the panel internal wiring to facilitate easy tracing of the wiring.
22.1.2	Feeder Nameplates	a. Large and bold name plate carrying the feeder identification/ numbers shall be provided on the top of each panel on front as well as rear side. On rear side, nameplate should be provided on frame. b. Rear bottom of each panel shall have a nameplate clearly indicating the following: Customer Name – BSES Delhi; PO No. & date; Drawing Reference No. etc.
22.1.3	Rating Plate	Following details are to be provided on Panel rating plate: a. Customer Name – BSES Yamuna Power Limited b. PO No. & Date – c. Complete CT Rating plate details d. Complete PT Rating plate details e. Complete CB Rating Plate details f. Date of Manufacturing- g. Warranty Period- h. Customer care No- i. Control Voltage-
22.1.4	Material	Non-rusting metal or 3 ply lamicoid. Nameplates shall be black with white engraving lettering. Stickers are

DocUUID : 23f7dc1d-9724-406f-b48e-bdff68bb2c4f

		not allowed.
22.1.5	Fixing	All nameplates/rating plates shall be riveted to the panels at all four corners. Bolting/screwing is not acceptable.
22.2	Markings	Each switch shall bear clear inscription identifying its function. Similar inscription shall also be provided on each device whose function is not otherwise identified. If any switch or device does not bear this inscription separate nameplate giving its function shall be provided for it. Switch shall also have clear inscription for each position indicating e.g. Trip-Neutral close, ON-OFF etc.

23 SURFACE TREATMENT & PAINTING

23.1	Surface Treatment	Sand blasting or by seven tank process.
23.2	Paint type	Powder coated. Pure polyester base grade-A structure finish.
23.3	Paint shade	RAL 7032 for external & internal surface
23.4	Paint thickness	Minimum 50 microns

24 APPROVED MAKES OF COMPONENTS

24.1	Numerical Relays	Siprotec series of Siemens, Micom series of Schneider/Alstom. Numerical relays used in complete switchboard should be of same make. Use of two different makes of relays in a switchboard is not acceptable.
24.2	Transformer monitoring cum AVR relay	A-eberle
24.3	Electromechanical Relays	Alstom/Schneider/Siemens/ABB/ER
24.4	Aux Relays	ABB/Jyoti/Omran
24.5	Contactors	ABB/Siemens/Telemechanique

DocUUID : 23f7dc1d-9724-406f-b48e-bdff68bb2c4f

24.6	Instrument transformers	ECS/ Pragati/ Gemini/Schneider/CGL/Kappa/Narayan power tech
24.7	MCBs	Siemens/Schneider/Legrand/ABB
24.8	Control switches	Switron/Kaycee
24.9	Test terminal blocks	IMP/Schneider/Alstom
24.10	Terminal blocks	Elmex/Connectwell
24.11	Indicating lamps	Siemens/ Teknic/ Binay
24.12	Surge Suppressors	Oblum/Tyco
24.13	Meters	Rishabh(Rish delta Energy)/Conzerv
24.14	Ethernet Switch	Ruggedcom/Hirschman

25 INSPECTION , TESTING & QUALITY ASSURANCE

25.1	Type Tests	The product must be of type tested as per applicable Indian standards / IEC
25.1.1	Type test report validity period	Last five years from date of bid submission. Bidder with type test report more than 5 years old needs to re-conduct the tests without any commercial implication to BSES
25.1.2	Pressure relief device operation	Test certificate for panel to be submitted
25.2	Acceptance & Routine tests	As per the specification and relevant standards. Charges for these tests shall be deemed to be included in the equipment price. In addition to these tests, following tests have to be carried out as acceptance tests -
25.2.1	Primary injection test	To be carried out on panels selected for testing
25.2.2	Temperature rise test	One panel per Purchase order (PO with minimum 10 panels) without any commercial implication to BSES. In-house testing is acceptable.
25.2.3	Paint Thickness/ Peel off	To be carried out on panels selected for testing

DocUUID : 23f7dc1d-9724-406f-b48e-bdff68bb2c4f

25.3	Inspection	The purchaser/owner reserves the right to witness all the acceptance/routine tests during inspection.
25.4	Notice to purchaser for conducting type tests	At least three weeks in advance
25.5	Quality Assurance	
25.5.1	Vendor quality plan	To be submitted for purchaser approval
25.5.2	Inspection points	To be mutually identified & agreed in quality plan

26 PACKING

26.1	Packing Protection	Against corrosion, dampness, heavy rains, breakage and vibration. During transportation/ transit and storage, panels may be subjected to outdoor conditions. Hence, packing of each panel shall be weatherproof.
26.2	Packing for accessories and spares	Robust wooden non returnable packing case with all the above protection & identification
26.3	Details of Packing Identification Label on each packing case	a. Individual serial number b. Purchaser's name c. PO number (along with SAP item code, if any) & date d. Equipment Tag no. (if any) e. Destination f. Project Details g. Manufacturer / Supplier's name h. Address of Manufacturer / Supplier / it's agent i. Description and Quantity j. Country of origin k. Month & year of Manufacturing l. Case measurements m. Gross and net weights in kilograms n. All necessary slinging and stacking instructions

DocUUID : 23f7dc1d-9724-406f-b48e-bdff68bb2c4f

27 SHIPPING

27.1	Shipping	The bidder shall ascertain at an early date and definitely before the commencement of manufacture, any transport limitations such as weights, dimensions, road culverts, Overhead lines, free access etc. from the Manufacturing plant to the project site. Bidder shall furnish the confirmation that the proposed Packages can be safely transported, as normal or oversize packages, up to the site. Any modifications required in the infrastructure and cost thereof in this connection shall be brought to the notice of the Purchaser.
		The seller shall be responsible for all transit damage due to improper packing.

28 HANDLING AND STORAGE

28.1	Handling and Storage	Manufacturer instruction shall be followed. Detail handling & storage instruction sheet / manual needs to be furnished before commencement of supply.

29 DEVIATION

29.1	Deviation	Deviations from this Specification shall be provided in excel sheet with tender by reference to the Specification clause/GTP/Drawing and a description of the alternative offer. In absence of such a statement, it will be assumed that the bidder complies fully with this specification.

DocUUID : 23f7dc1d-9724-406f-b48e-bdff68bb2c4f

30 ACCESSORIES & TOOLS

30.1	Type and Quantity	Bidder to indicate
30.2	Special tools & tackles required for erection, testing, commissioning and maintenance of the switchboard	The cost of these items shall be indicated separately in the bid as optional.
30.3	Suitable handling truck / trolley for lifting and moving the circuit breaker	To be supplied. (Two trolleys for each type/rating of breaker)

31 DRAWINGS & DATA SUBMISSION MATRIX

Drawing submission shall be as per the matrix given below. All documents/ drawing shall be provided on A3/A4 sheet (based on legibility) in box file with separators for each section. PDF shall also be provided of all documents via USB. Deviation sheet and GTP shall be provided in excel sheet .Language of the documents shall be English only. Deficient/ improper document/ drawing submission shall be liable for rejection.

S. No	Head	Bid	Drawing Approval	Pre Dispatch	Pre Closure
31.1	Contact Person Name, Email ID and Mobile Number	Required			
31.2	Consolidated Deviation Sheet	Required	Required		
31.3	GTP	Required	Required		
31.4	Relevant Type Test as per IS/IEC	Required			
31.5	Power Cable and control cable Philosophy and Schedule		Required		
31.6	Manufacturer's quality assurance plan and certification for quality standards		Required		
31.7	Sizing Calculation of Associated Equipment		Required		

DocUUID : 23f7dc1d-9724-406f-b48e-bdff68bb2c4f

31.8	Recommended Spares Apart from spares stated in Spec(for five years of operation)		Required		
31.9	11 kV / 33 kV Switchgear drawing				
31.9.1	General Arrangement	Required	Required		
31.9.2	Sectional Layout		Required		
31.9.3	Door Layout		Required		
31.9.4	LV Box Internal Layout		Required		
31.9.5	SLD	Required	Required		
31.9.6	Schematic Circuit diagram and Scheme of Each type of Panel		Required		
31.9.7	Communication Architecture		Required		
31.9.8	Bus Bar Arrangement		Required		
31.9.9	QAP		Required		
31.9.10	Panel wise BOQ		Required		
31.9.11	Logic Operation Diagram		Required		
31.9.12	Plan		Required		
31.9.13	Synch Logic Diagram		Required		
31.9.14	Foundation Diagram		Required		
31.9.15	DI sheet		Required		
31.9.16	DO Sheet		Required		
31.9.17	TB Details		Required		
31.9.18	Make of all Component as per specification		Required		
31.10	Drawing of CT, PT and Surge Arrestor		Required		
31.11	Drawing of Substation Room		Required		
31.12	Ventilation detail requirement of GIS Room		Required		

DocUUID : 23f7dc1d-9724-406f-b48e-bdff68bb2c4f

31.13	Installation, erection and commissioning manual for switchgear		Required		
31.14	Inspection Reports			Required	
31.15	As manufacturing Drawings			Required	
31.16	Operation and Maintenance Manual			Required	Required
31.17	Trouble shooting manual			Required	Required
31.18	As built Drawings				Required
31.19	Test Report				Required
31.20	Weekly progress report				Required

DocUUID : 23f7dc1d-9724-406f-b48e-bdff68bb2c4f

ANNEXURE – A - SCOPE OF SUPPLY

Scope of supply should include the following –

1.1 Design, manufacture, assembly, testing at manufacturer's works, properly packed for transport, supply and FOR delivery at site of following 11kV / 33kV Switchgears as per enclosed specification and single line diagram.

1.2 Base channel frame of the switchgears with hardware.

1.3 Two trolleys for breaker of each size are to be provided per switchboard.

1.4 Programming software and communication cord for numerical relays.

1.5 Unit price of 33kV Incomer with Distance relay as primary protection and 33kV Incomer with Line differential relay as primary protection should be mentioned separately in the bid. Primary protection to be used in Incomer panel will be finalized based on site requirement.

1.6 Unit price of Bus PT should be indicated separately in the bid to enable addition/deletion based on site requirement.

1.7 Bidder should indicate price of one set of special tools and tackles (if any) required for maintenance of switchgear and its components.

1.8 Bidder should indicate price of each spare as per Annexure E.

1.9 All relevant drawings, data and instruction manuals.

DocUUID : 23f7dc1d-9724-406f-b48e-bdff68bb2c4f

ANNEXURE – B – TRANSFORMER MONITORING CUM AVR RELAY

1	General features	
1.1	Technology and Functionality	Microprocessor based with provision for multifunction control and monitoring.
1.2	Mounting	Flush Mounting
1.3	Architecture	Hardware and software architecture shall be modular and disconnectable to adapt the control unit to the required level of complexity as per the application.
1.4	Programming and configuration	AVR shall utilize a user friendly setting and operating multilingual software in windows environment with menus and icons for fast access to the data required.
1.5	User Machine Interface	UMI with an alphanumeric key pad and graphical LCD display with backlight indicating measurement values and operating messages. Capability to access and change all settings and parameters.
1.6	PC Interface port	Front port (preferably serial) for configuration using PC. Cost of licensed software and communication cord, required for programming of offered protection relays using PC, shall be mentioned separately in the bid.
1.7	SCADA Interface port	LC Type Dual fibre optic port for interfacing with SCADA on IEC 61850 & PRP compatible. Through these ports relays shall be connected to Ethernet switches.
1.8	Self diagnosis	Shall be able to detect internal failures. A watchdog relay with changeover contact shall provide information about the failure.
1.9	Cable Termination	Termination of cable shall be at rear side.
1.10	Auxiliary supply	220VDC or 48VDC
2	Inputs and Outputs	
2.1	CT Input	1/5A selectable through programming
2.2	PT Input	110VAC
2.3	Binary Inputs	Sixteen programmable binary inputs should be provided

DocUUID : 23f7dc1d-9724-406f-b48e-bdff68bb2c4f

2.4	Analog Inputs (4-20mA)	One input to be provided
2.5	PT-100 direct input	Two inputs to be provided
2.6	Direct Resistance Input	For tap position indication (18 steps)
2.7	Binary Outputs	Ten programmable binary outputs should be provided
3	Control	
3.1	Control Tasks	Ability to implement control functions through programmable logics
3.2	Voltage setting	Programmable Voltage set point
3.3	Voltage Regulation	Raise/Lower tap position to maintain the preset value of voltage.
3.4	Voltage Regulation modes	Automatic and Manual
3.5	Operation Modes	Local and Remote
3.6	Fan and Pump control	To be provided
3.7	Transformer Paralleling	Capability to parallel transformers whose AVRs are interconnected via a communication network.
4	SCADA Interfacing	
4.1	Configuration of DIs for routing alarm/trip signals to SCADA.	DI-1 – Buchholz trip DI-2 – OSR Trip DI-3 – PRV trip DI-4 – SPR trip DI-5 – OTI trip DI-6 – WTI trip DI-7 – Buchholz alarm DI-8 – Oil Level low alarm (MOG alarm) DI-9 – WTI alarm DI-10 – OTI alarm DI-11 – Tap changer trouble/stuck/out of step DI-12 – Tap changer motor supply fail DI-13 – Tap changer in local control All signals from DI-1 to DI-10 are to be wired up from transformer trouble auxiliary relays.
4.2	Configuration of DOs for	DO-1 – Tap raise

DocUUID : 23f7dc1d-9724-406f-b48e-bdff68bb2c4f

	executing commands from SCADA through interface port/CRP	DO-2 – Tap lower DO-3 – Fan group 1 control DO-4 – Fan group 2 control
4.3	Spare DIs and DOs	To be wired upto the terminal block.
5	Measurement, Event Recording and Monitoring	
5.1	Measured Quantities (optional)	Voltage, Current, Active Power, Reactive Power, Apparent Power, Power factor, frequency
5.2	Event Recording	Facility for recording parameters during various events such as tap change, change in binary input status etc.
5.3	Monitoring	Capability to monitor important transformer parameters such as Oil temperature, Winding Temperature etc and give indication/alarm when the value of a particular parameter exceeds the preset value.

DocUUID : 23f7dc1d-9724-406f-b48e-bdff68bb2c4f

ANNEXURE – C - TECHNICAL PARTICULARS

1.0	SWITCHGEAR		
1.1	Type	Metal clad, air insulated with VCB type circuit breaker	
1.2	Service	Indoor	
1.3	Mounting	Free standing, floor mounted	
1.4	System Voltage	11 KV	33kV
1.5	Voltage variation	+/- 10%	
1.6	Frequency	50 Hz +/- 5%	
1.7	Phase	3	
1.8	Rated voltage	12 KV	36 kV
1.9	Rated current	As per SLDs given in Annexure-F	
1.10	Short time rating for 3 sec.	25kA	25kA
1.11	Internal arc classification and rating		
1.11.1	Classification	IAC – A - FLR	IAC – A - FLR
1.11.2	Rating	25kA for 1 second	25kA for 1 second.
1.12	Insulation level (PF rms / Impulse peak)	28 kV / 75 kV	70 kV/ 170 kV
1.13	System ground	Effectively earthed	Effectively earthed
1.14	Enclosure degree of protection	IP – 4X for high voltage compartment and IP – 5X for metering and protection compartment	
1.15	Bus bar - Main	Rating as per SLDs given in annexure - F, Short time rating as per clause 1.10.	
1.15.1	Material	Tinned Electrolytic copper	
1.15.2	Bus bar sleeve	Sleeved with shrouds on joints. Tape on joints is not acceptable.	
1.15.3	Bus identification	Colour coded	
1.15.4	Temperature rise	40 deg. C for conventional joints. 55 deg. C for silver plated joints	
1.16	Auxiliary bus bar	Electrolytic grade tinned copper	

DocUUID : 23f7dc1d-9724-406f-b48e-bdff68bb2c4f

1.17	Auxiliary DC Supply	220 V DC / 48 V DC	
1.18	Auxiliary AC supply	240 V AC 50 Hz	
1.19	Hardware	Stainless steel.	
1.20	Earth bus	Aluminium	
1.21	Bus duct entry	From top (where ever applicable)	
1.22	Power cable entry	From bottom and rear	
1.23	Control cable entry	From bottom and front (i.e breaker compartment)	
2.0	CIRCUIT BREAKER		
2.1	Voltage class, insulation level, short time rating	As specified for switchgear	
2.2	Rated current	As per SLDs given in annexure - F. Use of two breakers in parallel to meet the required current rating shall not be acceptable.	
2.3	Duty cycle	O – 0.3 sec – CO - 3min - CO	
2.4	Short circuit rating		
2.4.1	A.C sym. breaking current	25kA	25kA
2.4.2	Short circuit making current	62.5kA	62.5kA
2.5	Operation time		
2.5.1	Break time	Not more than 4 cycles	
2.5.2	Make time	Not more than 5 cycles	
2.6	Range of Auxiliary Voltage		
2.6.1	Closing	85% - 110%	
2.6.2	Tripping	70% - 110%	
2.6.3	Spring Charging	85% - 110%	
2.7	No. of spare aux. Contacts of Breaker, for Owner's use.	Minimum 6 NO + 6 NC	
2.8	No. of spare contacts of Service and Test position limit switch	2 NO	

DocUUID : 23f7dc1d-9724-406f-b48e-bdff68bb2c4f

3.0	CURRENT TRANSFORMERS		
3.1	Voltage class, insulation level and short time rating	As specified for switchgear	
3.2	Type	Cast resin, window / bar primary type	
3.3	Class of insulation	Class E or better	
3.4	Ratio	As per SLDs given in annexure - F	
3.5	Number of secondaries	As per SLDs given in annexure - F	
3.6	Accuracy class		
3.6.1	Protection core	5P20	
3.6.2	Protection (Diff. / REF)	PS	
3.6.3	Metering	0.2s	
3.6.4	Core balance CT	PS	
3.7	Burden (VA)	Adequate for the protection & instruments offered	
3.8	Excitation current of PS Class CTs	30 mA at Vk/4	
3.8	Knee Point Voltage of PS Class CTs (Vk)	>= 40 (Rct + 4)	
3.9	Primary operating current sensitivity of CBCTs	5A	
4.0	VOLTAGE TRANSFORMERS		
4.1	Type	Cast resin, draw out type, single phase units	
4.2	Rated Voltage		
4.2.1	Primary	11000/sq.rt.3	33000/sq.rt.3
4.2.2	Secondary	110V/sq.rt.3	
4.3	No. of phases	3	
4.4	No. of secondary windings	2	
4.5	Method of connection	Star/Star	
4.6	Rated voltage factor	1.2 continuous, 1.9 for 30 seconds	
4.7	Class of insulation	Class E or better	

DocUUID : 23f7dc1d-9724-406f-b48e-bdff68bb2c4f

4.8	Accuracy class		
4.8.1	Protection	3P	
4.8.2	Metering	0.2	
4.9	Primary and secondary fuses	HRC current limiting type, Primary fuse replacement shall be possible with VT in withdrawn position	
5.0	HV FUSES		
5.1	Voltage class	12kV	36kV
5.2	Rupturing capacity	50kA	
5.3	Rated current	As per application	
6.0	SURGE ARRESTORS	For 11kV switchgear	For 33kV switchgear
6.1	Rated Voltage	9kV	30kV
6.2	Maximum continuous operating voltage (MCOV)	7.65kV	25kV
6.3	Discharge current	10kA	10kA
6.4	Discharge class	3	3

Note - The auxiliary DC voltage shall be checked on a case to case basis by Purchaser

DocUUID : 23f7dc1d-9724-406f-b48e-bdff68bb2c4f

ANNEXURE – D - GUARANTEED TECHNICAL PARTICULARS (DATA BY BIDDER)

Vendor must submit clause wise compliance in Excel sheet against specification at the time of drawing approval clearly highlighting the deviations from specification against each clause.

DocUUID : 23f7dc1d-9724-406f-b48e-bdff68bb2c4f

ANNEXURE – E – SPARES REQUIREMENT

Unit rate of all below mentioned spares have to be provided in the bid.

S No.	Description	Qty
1	Line voltage transformer	3 (1 set)
2	Bus voltage transformer	3 (1 set)
3	Current transformer of each ratio	3 (1 set)
4	Trip Coil	4
5	Closing Coil	4
6	CB Spring charging motor	2
7	Auxiliary switch	2 sets (2 Nos. each type)
8	Bursting disc / pressure relief plate complete	2
9	Numerical relay of each type	1 nos. (each type)
10	Ethernet Switch	1 No (Each Site)
11	Optical Fibre	20% of Supplied Items
12	CAT VI Ethernet cable for Communication	20% of Supplied Items
13	Vacuum Interrupter Bottle	1 set (3 nos.) of each rating
14	Breaker contacts for busbar	1 set (3 nos.) of each rating
15	Breaker testing cable with plug suitable for breaker on one side and plug suitable for the panel on the other side	3 meter(each type)
16	SCADA Spare	20% of Supplied Items

ANNEXURE – F – SLDs

DocUUID : 23f7dc1d-9724-406f-b48e-bdff68bb2c4f

ANNEXURE–F1

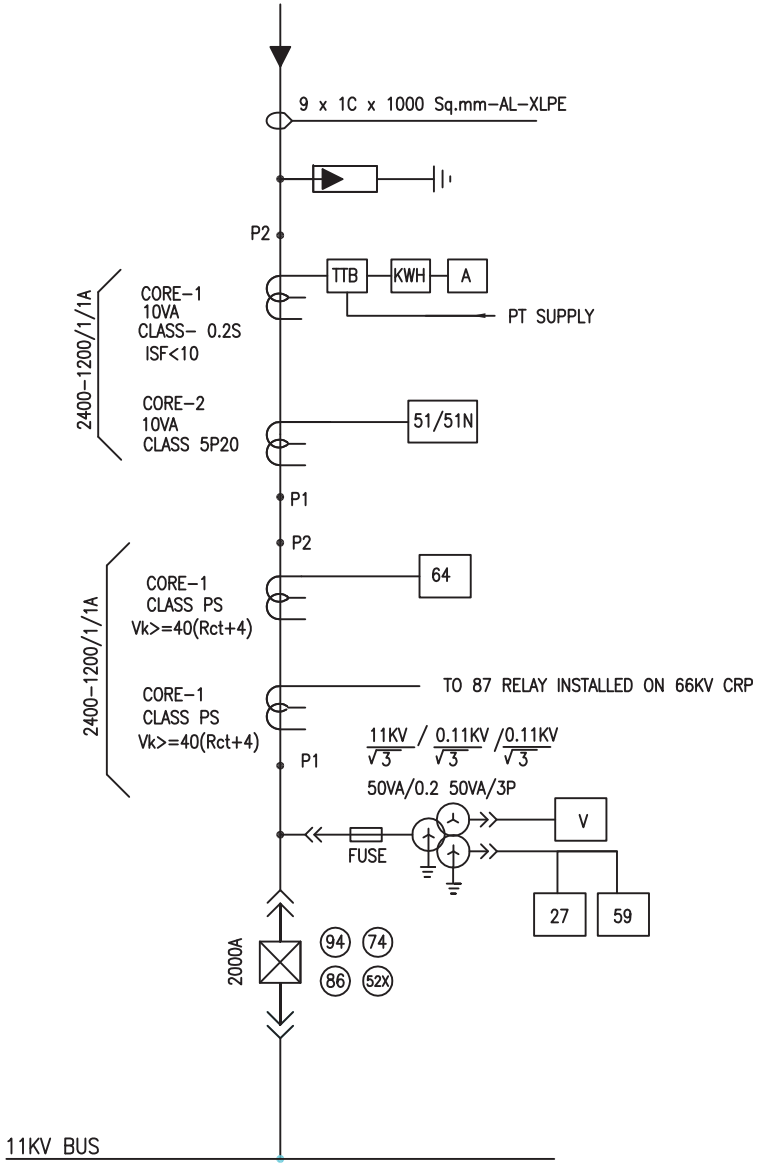

25 KA for 3 secs, 2000A at 50 degree celsius

LEGEND

SYMBOL	DESCRIPTION
	11KV SF6/VACUUM CKT. BKR. DRAWOUT TYPE
	CURRENT TRANSFORMER
	POTENTIAL TRANSFORMER
	SURGE ARRESTOR
	FUSE
52X	BREAKER AUX CONTACT MULTIPLIER
74	TRIP CIRCUIT SUPERVISION RELAY
94	ANTI PUMPING RELAY
86	HIGH SPEED TRIP RELAY
V	VOLTMETER
A	AMMETER

SYMBOL	DESCRIPTION
KWH	ENERGY METER
46	NEGATIVE PHASE SEQUENCE PROTECTION
25	SYNC CHECK
51/51N	O/C & E/F RELAY
27	UNDER VOLTAGE RELAY
87	DIFFERENTIAL RELAY
21	DISTANCE RELAY
59	OVER VOLTAGE RELAY
64	REF RELAY
67/67N	DIRECTIONAL O/C & E/F RELAY
TTB	TEST TERMINAL BLOCK

NOTE:–

1. KWH METER NOT IN SUPPLIER'S SCOPE
2. REFER CLAUSE 16 OF SPECIFICATION FOR DETAILED FUNCTIONAL REQUIREMENTS OF PROTECTION RELAYS

DRAWN	R.K/A.H H.K	TITLE:– STANDARD SLD FOR 11KV INCOMER	BSES
CHECKED	S.G/A.S		
APPD.	G.S/G.N		
DATE	29.04.22		SPECIFICATION NO. BSES–TS–66–HTSWG–R0
SCALE	NTS		SLD–SWG–11KV–01

DocUUID : 23f7dc1d-9724-406f-b48e-bdf68bb2c4f

ANNEXURE–F2

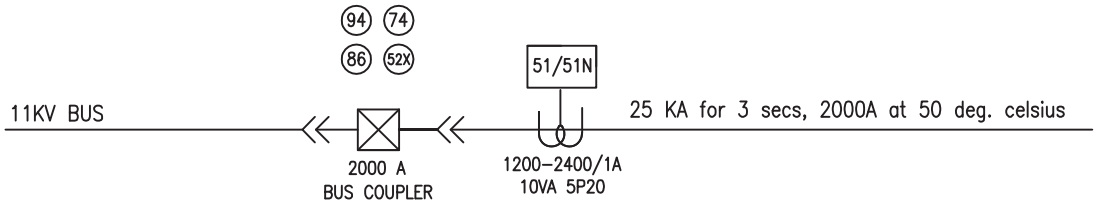

LEGEND

SYMBOL	DESCRIPTION
	11KV SF6/VACUUM CKT. BKR. DRAWOUT TYPE
	CURRENT TRANSFORMER
	POTENTIAL TRANSFORMER
	SURGE ARRESTOR
	FUSE
52X	BREAKER AUX CONTACT MULTIPLIER
74	TRIP CIRCUIT SUPERVISION RELAY
94	ANTI PUMPING RELAY
86	HIGH SPEED TRIP RELAY
V	VOLTMETER
A	AMMETER

SYMBOL	DESCRIPTION
KWH	ENERGY METER
46	NEGATIVE PHASE SEQUENCE PROTECTION
25	SYNC CHECK
51/51N	O/C & E/F RELAY
27	UNDER VOLTAGE RELAY
87	DIFFERENTIAL RELAY
21	DISTANCE RELAY
59	OVER VOLTAGE RELAY
64	REF RELAY
67/67N	DIRECTIONAL O/C & E/F RELAY
TTB	TEST TERMINAL BLOCK

NOTE:–

1. REFER CLAUSE 16 OF SPECIFICATION FOR DETAILED FUNCTIONAL REQUIREMENTS OF PROTECTION RELAYS

DRAWN	R.K/A.H H.K	TITLE:– STANDARD SLD FOR 11KV BUS SECTION	BSES
CHECKED	S.G/A.S		
APPD.	G.S/G.N		
DATE	29.04.22		
SCALE	NTS		

SPECIFICATION NO. BSES–TS–66–HTSWG–R0

SLD–SWG–11KV–02

DocUUID : 23f7dc1d-9724-406f-b48e-bdff68bb2c4f

ANNEXURE–F3

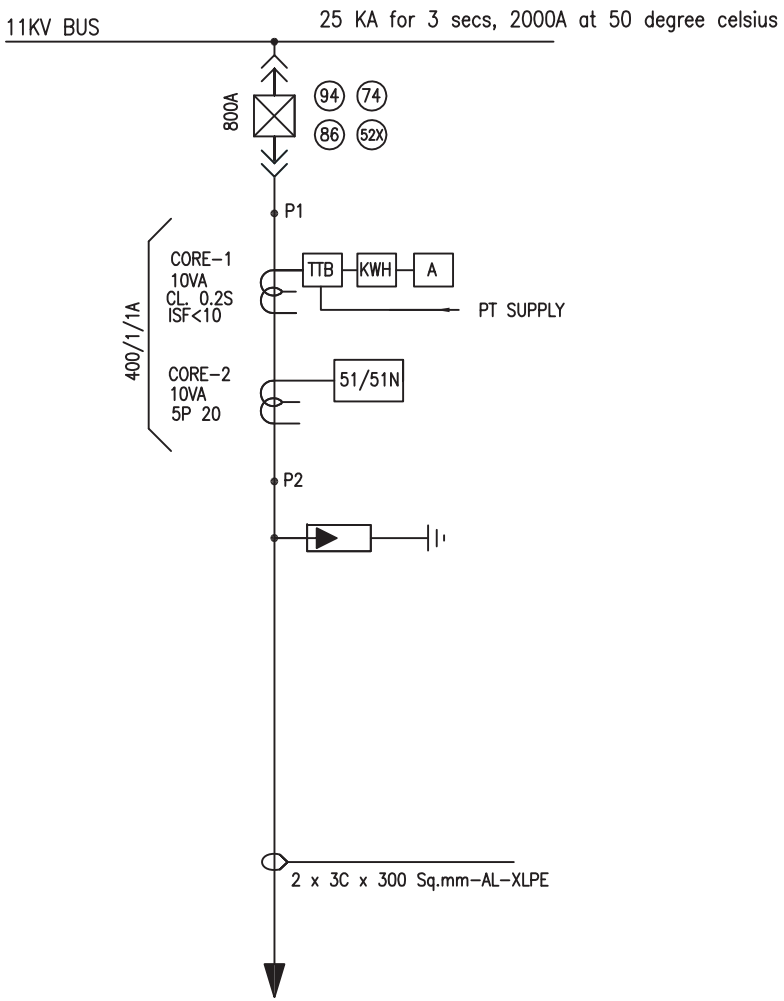

LEGEND

SYMBOL	DESCRIPTION
	11KV SF6/VACUUM CKT. BKR. DRAWOUT TYPE
	CURRENT TRANSFORMER
	POTENTIAL TRANSFORMER
	SURGE ARRESTOR
	FUSE
52X	BREAKER AUX CONTACT MULTIPLIER
74	TRIP CIRCUIT SUPERVISION RELAY
94	ANTI PUMPING RELAY
86	HIGH SPEED TRIP RELAY
V	VOLTMETER
A	AMMETER

SYMBOL	DESCRIPTION
KWH	ENERGY METER
46	NEGATIVE PHASE SEQUENCE PROTECTION
25	SYNC CHECK
51/51N	O/C & E/F RELAY
27	UNDER VOLTAGE RELAY
87	DIFFERENTIAL RELAY
21	DISTANCE RELAY
59	OVER VOLTAGE RELAY
64	REF RELAY
67/67N	DIRECTIONAL O/C & E/F RELAY
TTB	TEST TERMINAL BLOCK

NOTE:–

1. KWH METER NOT IN SUPPLIER'S SCOPE
2. REFER CLAUSE 16 OF SPECIFICATION FOR DETAILED FUNCTIONAL REQUIREMENTS OF PROTECTION RELAYS

DRAWN	R.K/A.H H.K	TITLE:– STANDARD SLD FOR 11KV OUTGOING FEEDER	BSES
CHECKED	S.G/A.S		
APPD.	G.S/G.N		
DATE	29.04.22		SPECIFICATION NO. BSES–TS–66–HTSWG–R0
SCALE	NTS		SLD–SWG–11KV–03

DocUUID : 23f7dc1d-9724-406f-b48e-bdf68bb2c4f

ANNEXURE–F4

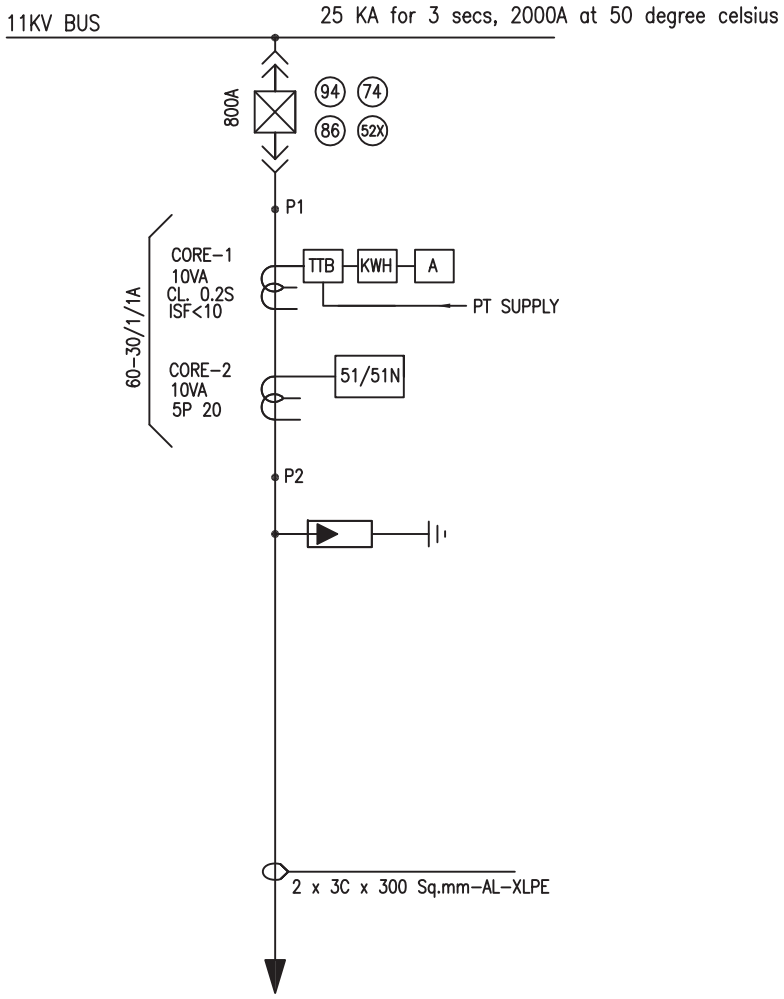

LEGEND

SYMBOL	DESCRIPTION
	11KV SF6/VACUUM CKT. BKR. DRAWOUT TYPE
	CURRENT TRANSFORMER
	POTENTIAL TRANSFORMER
	SURGE ARRESTOR
	FUSE
52X	BREAKER AUX CONTACT MULTIPLIER
74	TRIP CIRCUIT SUPERVISION RELAY
94	ANTI PUMPING RELAY
86	HIGH SPEED TRIP RELAY
V	VOLTMETER
A	AMMETER

SYMBOL	DESCRIPTION
KWH	ENERGY METER
46	NEGATIVE PHASE SEQUENCE PROTECTION
25	SYNC CHECK
51/51N	O/C & E/F RELAY
27	UNDER VOLTAGE RELAY
87	DIFFERENTIAL RELAY
21	DISTANCE RELAY
59	OVER VOLTAGE RELAY
64	REF RELAY
67/67N	DIRECTIONAL O/C & E/F RELAY
TTB	TEST TERMINAL BLOCK

NOTE:–

1. KWH METER NOT IN SUPPLIER'S SCOPE
2. REFER CLAUSE 16 OF SPECIFICATION FOR DETAILED FUNCTIONAL REQUIREMENTS OF PROTECTION RELAYS

DRAWN	R.K/A.H H.K	TITLE:– STANDARD SLD FOR 11KV STATION TRANSFORMER FEEDER	BSES
CHECKED	S.G/A.S		
APPD.	G.S/G.N		
DATE	29.04.22		SPECIFICATION NO. BSES–TS–66–HTSWG–R0
SCALE	NTS		SLD–SWG–11KV–04

DocUUID : 23f7dc1d-9724-406f-b48e-bdf66bb2c4f

ANNEXURE–F5

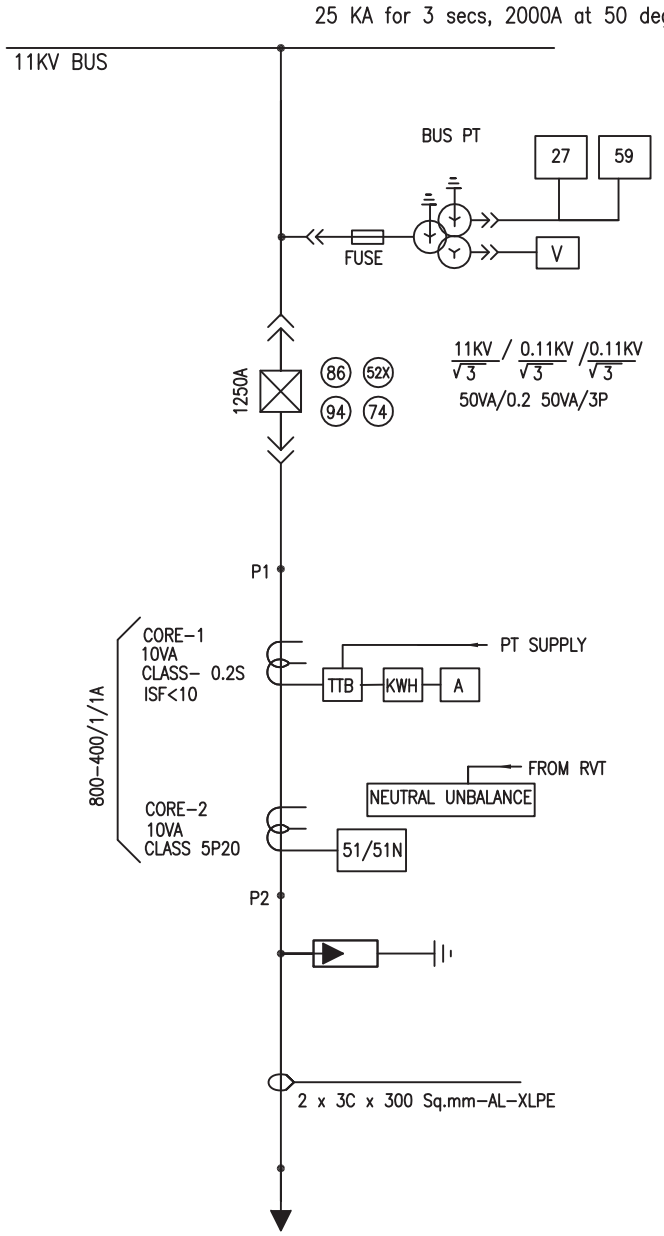

LEGEND

SYMBOL	DESCRIPTION
	11KV SF6/VACUUM CKT. BKR. DRAWOUT TYPE
	CURRENT TRANSFORMER
	POTENTIAL TRANSFORMER
	SURGE ARRESTOR
	FUSE
52X	BREAKER AUX CONTACT MULTIPLIER
74	TRIP CIRCUIT SUPERVISION RELAY
94	ANTI PUMPING RELAY
86	HIGH SPEED TRIP RELAY
V	VOLTMETER
A	AMMETER

SYMBOL	DESCRIPTION
KWH	ENERGY METER
25	SYNC CHECK
51/51N	O/C & E/F RELAY
27	UNDER VOLTAGE RELAY
87	DIFFERENTIAL RELAY
21	DISTANCE RELAY
59	OVER VOLTAGE RELAY
64	REF RELAY
67/67N	DIRECTIONAL O/C & E/F RELAY
TTB	TEST TERMINAL BLOCK

NOTE:–

1. KWH METER NOT IN SUPPLIER'S SCOPE
2. REFER CLAUSE 16 OF SPECIFICATION FOR DETAILED FUNCTIONAL REQUIREMENTS OF PROTECTION RELAYS
3. ONE BPT TO BE CONSIDERED FOR EACH CAPACITOR PANEL

DRAWN	R.K/A.H H.K	TITLE:– STANDARD SLD FOR 11KV CAPACITOR FEEDER	BSES
CHECKED	S.G/A.S		SPECIFICATION NO. BSES–TS–66–HTSWG–R0
APPD.	G.S/G.N		SLD–SWG–11KV–05
DATE	29.04.22		
SCALE	NTS		

DocUUID : 23f7dc1d-9724-406f-b48e-bdf6bbb2c4f

ANNEXURE–F6

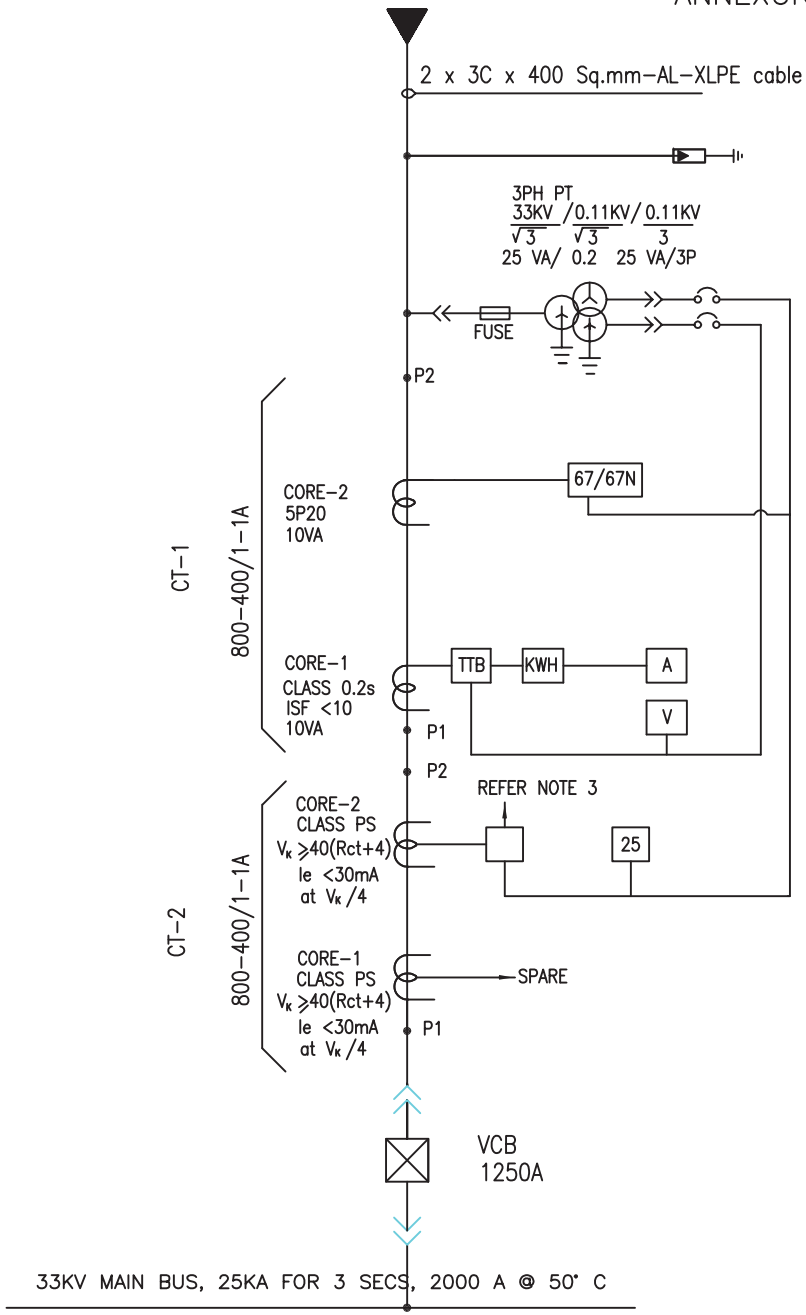

LEGEND

SYMBOL	DESCRIPTION
	11KV SF6/VACUUM CKT. BKR. DRAWOUT TYPE
	CURRENT TRANSFORMER
	POTENTIAL TRANSFORMER
	SURGE ARRESTOR
	FUSE
52X	BREAKER AUX CONTACT MULTIPLIER
74	TRIP CIRCUIT SUPERVISION RELAY
94	ANTI PUMPING RELAY
86	HIGH SPEED TRIP RELAY
V	VOLTMETER
A	AMMETER

SYMBOL	DESCRIPTION
KWH	ENERGY METER
46	NEGATIVE PHASE SEQUENCE PROTECTION
25	SYNC CHECK
51/51N	O/C & E/F RELAY
27	UNDER VOLTAGE RELAY
87	DIFFERENTIAL RELAY
21	DISTANCE RELAY
59	OVER VOLTAGE RELAY
64	REF RELAY
67/67N	DIRECTIONAL O/C & E/F RELAY
TTB	TEST TERMINAL BLOCK

NOTE:
1. KWH METER NOT IN SUPPLIER'S SCOPE
2. REFER CLAUSE 16 OF SPECIFICATION FOR DETAILED FUNCTIONAL REQUIREMENTS OF PROTECTION RELAYS
3. LINE DIFFERENTIAL OR DISTANCE RELAY. REFER CLAUSE 16.7.1 OF SPECIFICATION

DRAWN	R.K/A.H H.K	TITLE TYPICAL SLD FOR 33KV INCOMER	BSES
CHECKED	S.G/A.S		SPECIFICATION NO. BSES-TS-66-HTSWG-R0
APPD.	G.S/G.N		SLD-SWG-33KV-01
DATE	29.04.22		
SCALE	NTS		

DocUUID : 23f7dc1d-9724-406f-b48e-bdf66bb2c4f

ANNEXURE–F7

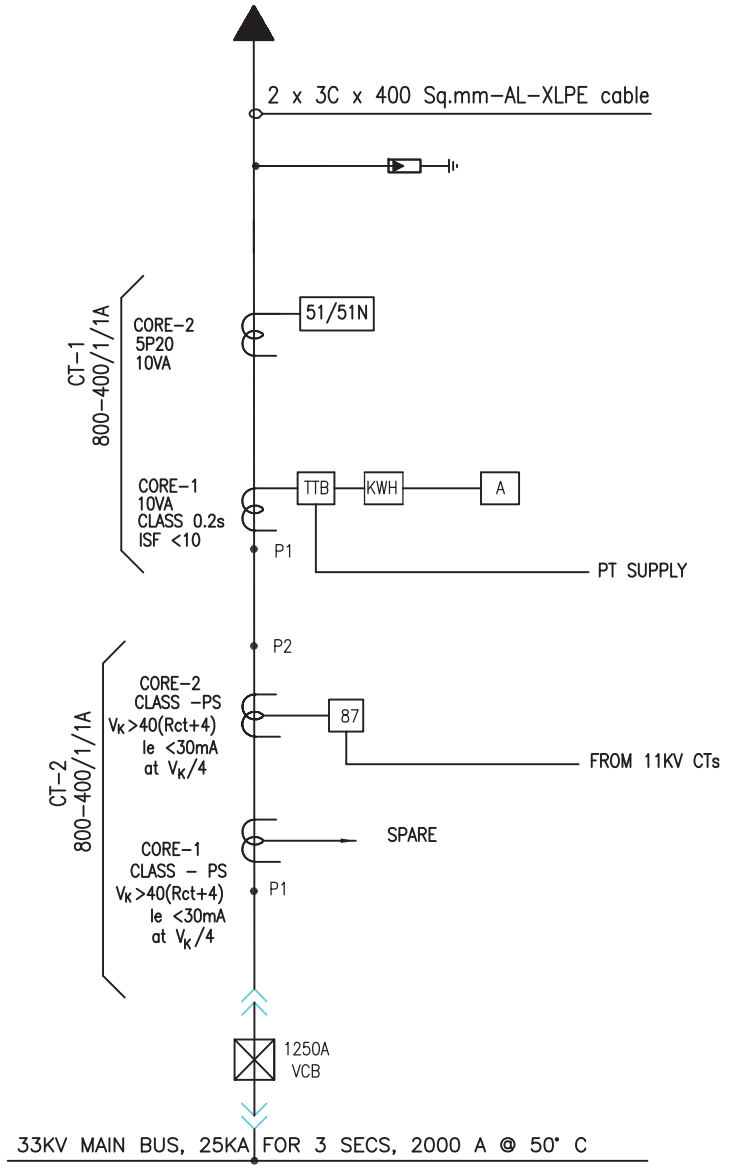

LEGEND

SYMBOL	DESCRIPTION
	11KV SF6/VACUUM CKT. BKR. DRAWOUT TYPE
	CURRENT TRANSFORMER
	POTENTIAL TRANSFORMER
	SURGE ARRESTOR
	FUSE
52X	BREAKER AUX CONTACT MULTIPLIER
74	TRIP CIRCUIT SUPERVISION RELAY
94	ANTI PUMPING RELAY
86	HIGH SPEED TRIP RELAY
V	VOLTMETER
A	AMMETER

SYMBOL	DESCRIPTION
KWH	ENERGY METER
46	NEGATIVE PHASE SEQUENCE PROTECTION
25	SYNC CHECK
51/51N	O/C & E/F RELAY
27	UNDER VOLTAGE RELAY
87	DIFFERENTIAL RELAY
21	DISTANCE RELAY
59	OVER VOLTAGE RELAY
64	REF RELAY
67/67N	DIRECTIONAL O/C & E/F RELAY
TTB	TEST TERMINAL BLOCK

NOTE:
1. KWH METER NOT IN SUPPLIER'S SCOPE
2. REFER CLAUSE 16 OF SPECIFICATION FOR DETAILED FUNCTIONAL REQUIREMENTS OF PROTECTION RELAYS

DRAWN	R.K/A.H H.K	TITLE TYPICAL SLD FOR 33/11KV TRANSFORMER FEEDER	BSES
CHECKED	S.G/A.S		SPECIFICATION NO. BSES-TS-66-HTSWG-R0
APPD.	G.S/G.N		
DATE	29.04.22		SLD-SWG-33KV-02
SCALE	NTS		

DocUUID : 23f7dc1d-9724-406f-b48e-bdff68bb2c4f

ANNEXURE–F8

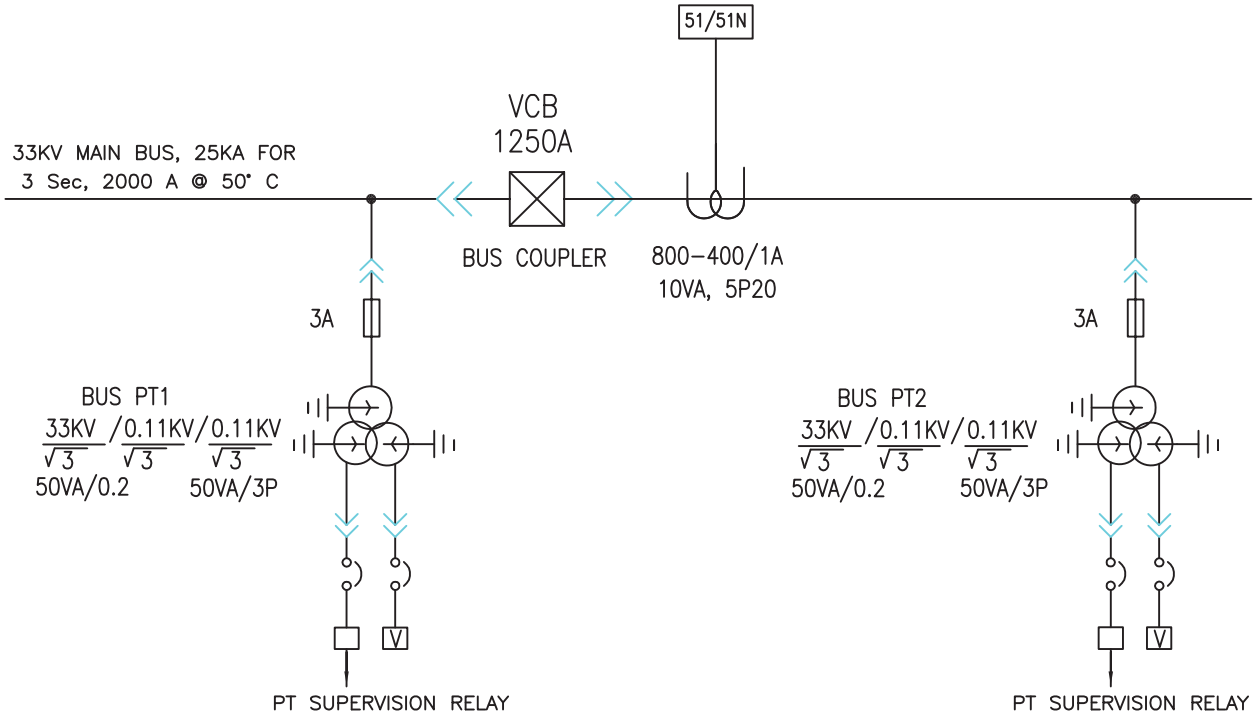

LEGEND

SYMBOL	DESCRIPTION
	11KV SF6/VACUUM CKT. BKR. DRAWOUT TYPE
	CURRENT TRANSFORMER
	POTENTIAL TRANSFORMER
	SURGE ARRESTOR
	FUSE
52X	BREAKER AUX CONTACT MULTIPLIER
74	TRIP CIRCUIT SUPERVISION RELAY
94	ANTI PUMPING RELAY
86	HIGH SPEED TRIP RELAY
V	VOLTMETER
A	AMMETER

SYMBOL	DESCRIPTION
KWH	ENERGY METER
46	NEGATIVE PHASE SEQUENCE PROTECTION
25	SYNC CHECK
51/51N	O/C & E/F RELAY
27	UNDER VOLTAGE RELAY
87	DIFFERENTIAL RELAY
21	DISTANCE RELAY
59	OVER VOLTAGE RELAY
64	REF RELAY
67/67N	DIRECTIONAL O/C & E/F RELAY
TTB	TEST TERMINAL BLOCK

NOTE:–

1. REFER CLAUSE 16 OF SPECIFICATION FOR DETAILED FUNCTIONAL REQUIREMENTS OF PROTECTION RELAYS

DRAWN	R.K/A.H H.K	TITLE	BSES
CHECKED	S.G/A.S	TYPICAL SLD FOR 33KV BUS COUPLER CUM BUS PT	SPECIFICATION NO. BSES-TS-66-HTSWG-R0
APPD.	G.S/G.N		SLD-SWG-33KV-03
DATE	29.04.22		
SCALE	NTS		

DocUUID : 23f7dc1d-9724-406f-b48e-bdff68bb2c4f

ANNEXURE–F9

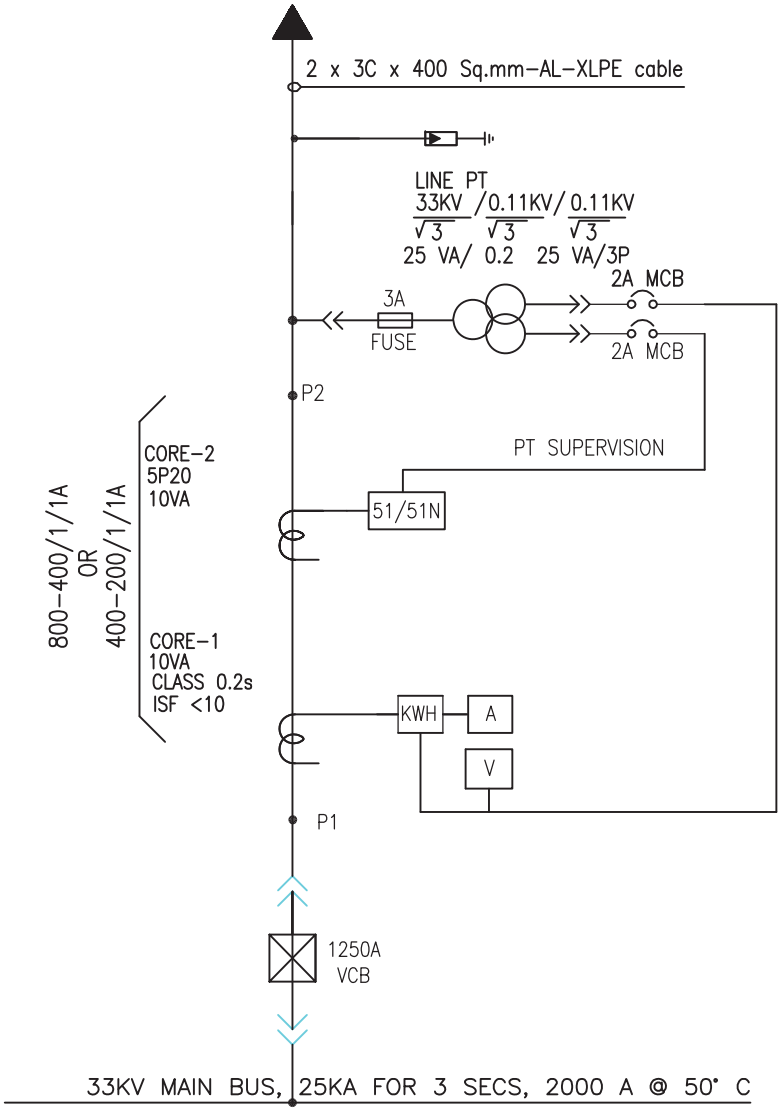

LEGEND

SYMBOL	DESCRIPTION
	11KV SF6/VACUUM CKT. BKR. DRAWOUT TYPE
	CURRENT TRANSFORMER
	POTENTIAL TRANSFORMER
	SURGE ARRESTOR
	FUSE
52X	BREAKER AUX CONTACT MULTIPLIER
74	TRIP CIRCUIT SUPERVISION RELAY
94	ANTI PUMPING RELAY
86	HIGH SPEED TRIP RELAY
V	VOLTMETER
A	AMMETER

SYMBOL	DESCRIPTION
KWH	ENERGY METER
46	NEGATIVE PHASE SEQUENCE PROTECTION
25	SYNC CHECK
51/51N	O/C & E/F RELAY
27	UNDER VOLTAGE RELAY
87	DIFFERENTIAL RELAY
21	DISTANCE RELAY
59	OVER VOLTAGE RELAY
64	REF RELAY
67/67N	DIRECTIONAL O/C & E/F RELAY
TTB	TEST TERMINAL BLOCK

NOTE:
1. KWH METER NOT IN SUPPLIER'S SCOPE
2. REFER CLAUSE 16 OF SPECIFICATION FOR DETAILED FUNCTIONAL REQUIREMENTS OF PROTECTION RELAYS
3. TTB NOT REQUIRED IN THIS PANEL

DRAWN	R.K/A.H H.K
CHECKED	S.G/A.S
APPD.	G.S/G.N
DATE	29.04.22
SCALE	NTS

TITLE

TYPICAL SLD FOR 33 KV OUTGOING FEEDER (FOR INSTALLATION AT KCC CONSUMERS PREMISES)

BSES

SPECIFICATION NO. BSES-TS-66-HTSWG-R0

SLD-SWG-33KV-04

DocUUID : 23f7dc1d-9724-406f-b48e-bdff68bb2c4f

ANNEXURE–F10

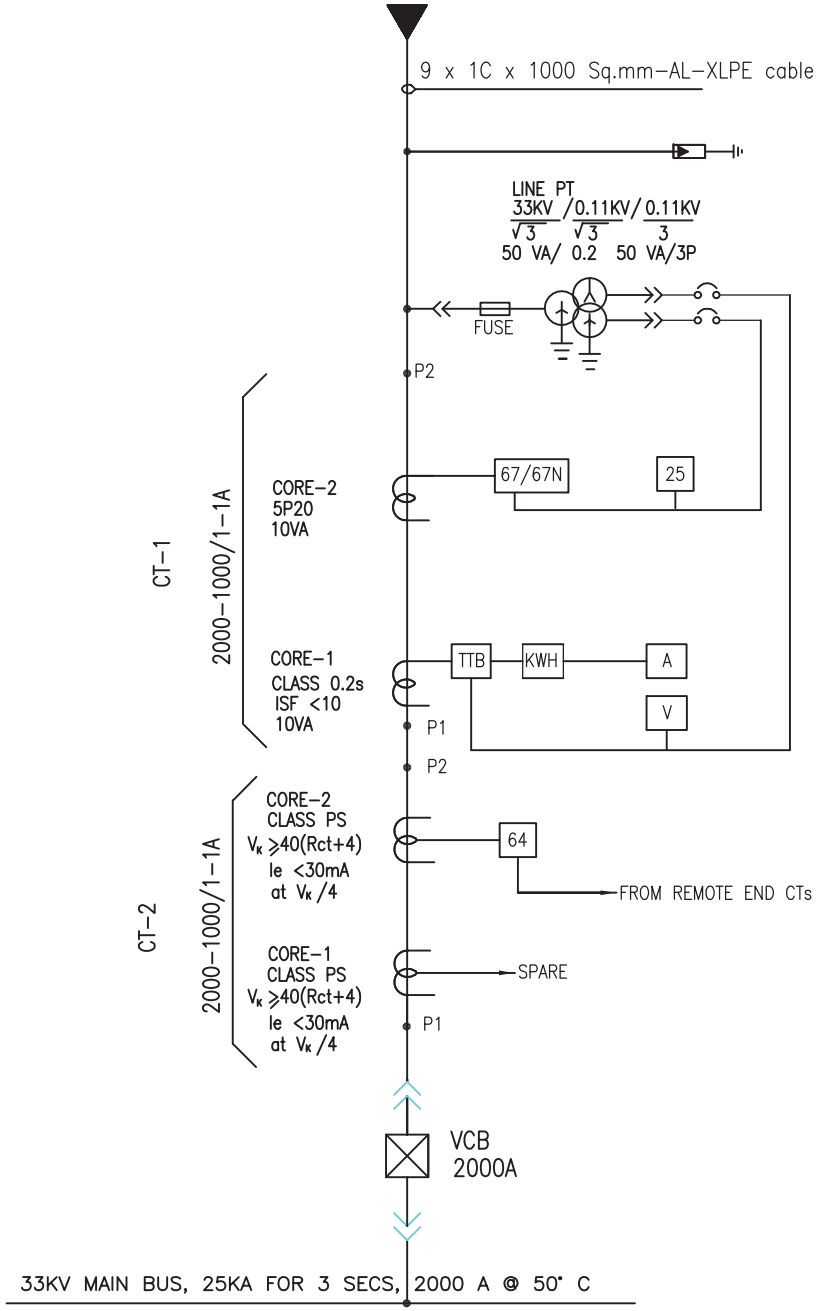

LEGEND

SYMBOL	DESCRIPTION
	11KV SF6/VACUUM CKT. BKR. DRAWOUT TYPE
	CURRENT TRANSFORMER
	POTENTIAL TRANSFORMER
	SURGE ARRESTOR
	FUSE
52X	BREAKER AUX CONTACT MULTIPLIER
74	TRIP CIRCUIT SUPERVISION RELAY
94	ANTI PUMPING RELAY
86	HIGH SPEED TRIP RELAY
V	VOLTMETER
A	AMMETER

SYMBOL	DESCRIPTION
KWH	ENERGY METER
46	NEGATIVE PHASE SEQUENCE PROTECTION
25	SYNC CHECK
51/51N	O/C & E/F RELAY
27	UNDER VOLTAGE RELAY
87	DIFFERENTIAL RELAY
21	DISTANCE RELAY
59	OVER VOLTAGE RELAY
64	REF RELAY
67/67N	DIRECTIONAL O/C & E/F RELAY
TTB	TEST TERMINAL BLOCK

NOTE: 1. KWH METER NOT IN SUPPLIER'S SCOPE
2. REFER CLAUSE 16 OF SPECIFICATION FOR DETAILED FUNCTIONAL REQUIREMENTS OF PROTECTION RELAYS

DRAWN	R.K/A.H H.K	TITLE: TYPICAL SLD FOR 33KV INCOMER FROM 66/33KV AUTO TRANSFORMER	BSES
CHECKED	S.G/A.S		SPECIFICATION NO. BSES-TS-66-HTSWG-R0
APPD.	G.S/G.N		SLD-SWG-33KV-05
DATE	29.04.22		
SCALE	NTS		

DocUUID : 23f7dc1d-9724-406f-b48e-bdff68bb2c4f

ANNEXURE–F11

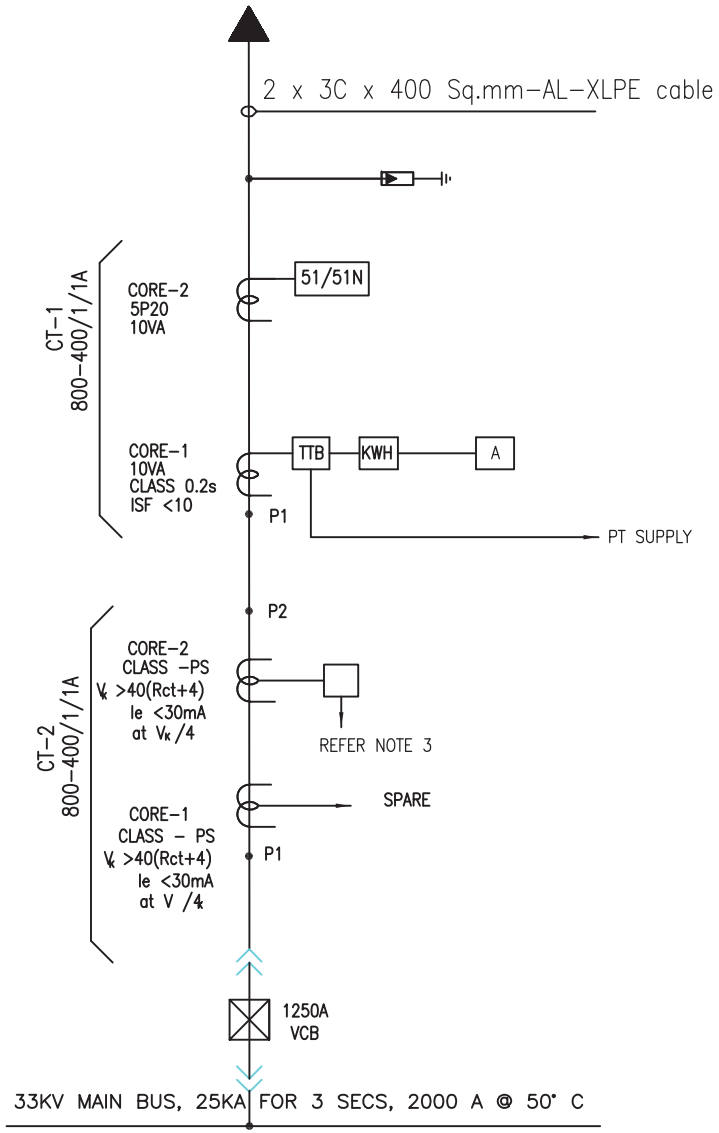

LEGEND

SYMBOL	DESCRIPTION
	11KV SF6/VACUUM CKT. BKR. DRAWOUT TYPE
	CURRENT TRANSFORMER
	POTENTIAL TRANSFORMER
	SURGE ARRESTOR
	FUSE
52X	BREAKER AUX CONTACT MULTIPLIER
74	TRIP CIRCUIT SUPERVISION RELAY
94	ANTI PUMPING RELAY
86	HIGH SPEED TRIP RELAY
V	VOLTMETER
A	AMMETER

SYMBOL	DESCRIPTION
KWH	ENERGY METER
46	NEGATIVE PHASE SEQUENCE PROTECTION
25	SYNC CHECK
51/51N	O/C & E/F RELAY
27	UNDER VOLTAGE RELAY
87	DIFFERENTIAL RELAY
21	DISTANCE RELAY
59	OVER VOLTAGE RELAY
64	REF RELAY
67/67N	DIRECTIONAL O/C & E/F RELAY
TTB	TEST TERMINAL BLOCK

NOTE:
1. KWH METER NOT IN SUPPLIER'S SCOPE
2. REFER CLAUSE 16 OF SPECIFICATION FOR DETAILED FUNCTIONAL REQUIREMENTS OF PROTECTION RELAYS
3. LINE DIFFERENTIAL OR DISTANCE RELAY. REFER CLAUSE 16.12.1 OF SPECIFICATION

DRAWN	R.K/A.H H.K
CHECKED	S.G/A.S
APPD.	G.S/G.N
DATE	29.04.22
SCALE	NTS

TITLE
TYPICAL SLD FOR 33KV OUTGOING FROM 66/33KV AUTO TRANSFORMER

BSES

SPECIFICATION NO. BSES-TS-66-HTSWG-R0

SLD-SWG-33KV-06

DocUUID : 23f7dc1d-9724-406f-b48e-bdff68bb2c4f

ANNEXURE–F12

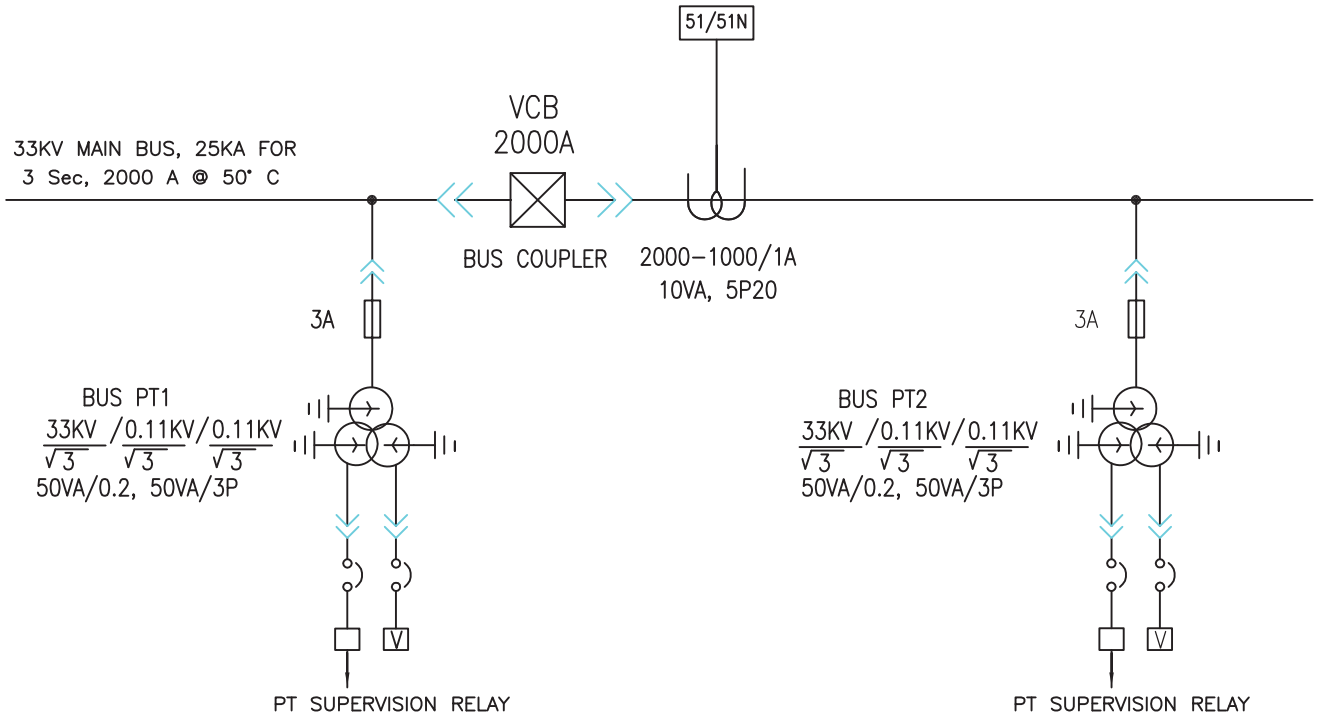

LEGEND

SYMBOL	DESCRIPTION
	11KV SF6/VACUUM CKT. BKR. DRAWOUT TYPE
	CURRENT TRANSFORMER
	POTENTIAL TRANSFORMER
	SURGE ARRESTOR
	FUSE
52X	BREAKER AUX CONTACT MULTIPLIER
74	TRIP CIRCUIT SUPERVISION RELAY
94	ANTI PUMPING RELAY
86	HIGH SPEED TRIP RELAY
V	VOLTMETER
A	AMMETER

SYMBOL	DESCRIPTION
KWH	ENERGY METER
46	NEGATIVE PHASE SEQUENCE PROTECTION
25	SYNC CHECK
51/51N	O/C & E/F RELAY
27	UNDER VOLTAGE RELAY
87	DIFFERENTIAL RELAY
21	DISTANCE RELAY
59	OVER VOLTAGE RELAY
64	REF RELAY
67/67N	DIRECTIONAL O/C & E/F RELAY
TTB	TEST TERMINAL BLOCK

NOTE:–

1. REFER CLAUSE 16 OF SPECIFICATION FOR DETAILED FUNCTIONAL REQUIREMENTS OF PROTECTION RELAYS

DRAWN	R.K/A.H H.K
CHECKED	S.G/A.S
APPD.	G.S/G.N
DATE	29.04.22
SCALE	NTS

TITLE

TYPICAL SLD FOR BUS COUPLER CUM BUS PT PANEL FOR 33KV SWITCH BOARD OF 66/33KV AUTO TRANSFORMER

BSES

SPECIFICATION NO. BSES-TS-66-HTSWG-R0

SLD-SWG-33KV-07

DocUUID : 23f7dc1d-9724-406f-b48e-bdff68bb2c4f

BSES

Technical Specification

Of

HT Indoor Switchgear (33 & 11 kV)

Specification no – BSES-TS-66-HTSWG-R0

Rev:		0
Date:		22 Jun 2022
Prepared by	Abhishek Harsh	
	Hemanshi Kaul	
Reviewed by	Srinivas Gopu	
	Abhinav Srivastava	
Approved by	Gaurav Sharma	
	Gopal Nariya	

INDEX

1 SCOPE OF SUPPLY 3
2 CODES & STANDARDS 3
3 SERVICE CONDITION 4
4 PANEL CONSTRUCTION 4
5 CIRCUIT BREAKER 6
6 FUNCTIONAL REQUIREMENTS 7
7 SURGE SUPPRESSOR 10
8 CURRENT TRANSFORMER 10
9 POTENTIAL TRANSFORMER 10
10 FEEDER AND BUS EARTHING 10
11 EQUIPMENT EARTHING 11
12 METERS 11
13 INDICATION, ALARMS & ANNUNCIATION 12
14 SELECTOR SWITCHES & PUSH BUTTONS 14
15 INTERNAL WIRING 14
16 TERMINAL BLOCKS 15
17 RELAYS 16
18 SYNCH CHECK PHILOSOPHY 28
19 ETHERNET SWITCHES & FIBRE OPTICS 29
20 SPACE HEATERS 30
21 SOCKETS, SWITCHES ,ILLUMINATION LAMPS & MCBs 30
22 NAMEPLATES AND MARKING 31
23 SURFACE TREATMENT & PAINTING 32
24 APPROVED MAKES OF COMPONENTS 32
25 INSPECTION , TESTING & QUALITY ASSURANCE 33
26 PACKING 34
27 SHIPPING 35
28 HANDLING AND STORAGE 35
29 DEVIATION 35
30 ACCESSORIES & TOOLS 36
31 DRAWINGS & DATA SUBMISSION MATRIX 36
ANNEXURE – A - SCOPE OF SUPPLY 39
ANNEXURE – B – TRANSFORMER MONITORING CUM AVR RELAY 40
ANNEXURE – C - TECHNICAL PARTICULARS 43
ANNEXURE – D - GUARANTEED TECHNICAL PARTICULARS (DATA BY BIDDER) 47
ANNEXURE – E – SPARES REQUIREMENT 48
ANNEXURE – F – SLDs 48

DocUUID : 23f7dc1d-9724-406f-b48e-bdff68bb2c4f

1 SCOPE OF SUPPLY

a. This specification covers the design, manufacture, testing, supply, erection & commissioning of 33kV and 11kV, Air Insulated, metal-enclosed and factory assembled switchgear.

b. This specification shall be used in conjunction with all specifications, switchgear data sheets, single line diagrams, and other drawings attached to the specification / purchase requisition.

2 CODES & STANDARDS

Materials, equipment and methods used in the manufacture of switchboards shall conform to the latest edition of following

2.1	Indian Electricity Rules 1956	Latest edition
2.2	Indian Electricity act 1910	Latest edition
2.3	Switchgear and control gear	IEC : 60694, IEC: 60298, IEC : 62271-200, IEC : 60529, IS: 3427, IS: 12729, IS: 12063, IS: 13947, IS: 9046
2.4	Circuit breaker	IEC 62271 - 100, IS 13118, IS 2516
2.5	Isolators & earthing switches	IEC 62271 - 102
2.6	Current transformers	IS:2705, IEC:60185
2.7	Voltage transformer	IS:3156, IEC:60186,
2.8	Indicating Instruments	IS:1248
2.9	Energy meters	IS 13010
2.10	Relays	IS:8686, IS:3231, IS:3842
2.11	Control switches and push buttons	IS 6875
2.12	HV fuses	IS 9385
2.13	Arrangement of Switchgear bus bars, main connections and auxiliary wiring	IS:375
2.14	Code of practice for phosphating iron & steel	IS 6005
2.15	Colours for ready mixed paints	IS 5
2.16	Code of practice for installation and maintenance of switchgear	IS 3072

DocUUID : 23f7dc1d-9724-406f-b48e-bdff68bb2c4f

3 SERVICE CONDITION

3.1	Max Ambient Temperature	50 deg C
3.2	Max Daily average ambient temp	40 deg C
3.3	Min Ambient Temp	0 deg C
3.4	Maximum Humidity	95%
3.5	Minimum Humidity	10%
3.6	Maximum annual rainfall	750 mm
3.7	Average no of rainy days per annum	60
3.8	Rainy months	June to Oct
3.9	Altitude above MSL	300 M
3.10	Seismic Zone	IV

4 PANEL CONSTRUCTION

4.1	Enclosure Type	Free standing, Indoor, Fully compartmentalised, Metal clad, Vermin proof
4.2	Enclosure degree of protection	IP 4X for high voltage compartment IP 5X for low voltage compartment
4.3	Enclosure material	Pre-Galvanized CRCA steel
4.3.1	Load bearing members	2.5 mm thick
4.3.2	Doors and covers	2.0 mm thick
4.3.3	Gland plate	3.0 mm MS for multicore and 5. 0 mm Aluminium for single core cables. All gland plates should be detachable type with gasket
4.4	Dimension of Panel	Maximum 2700mm, Operating height maximum 1600mm. In case of Extension of Existing make panels, vendor shall match the dimension of existing panel.
4.5	Extensibility	On either side
4.6	Separate Compartments for	Bus bar, Circuit Breaker, HV incoming cable, HV outgoing cable, PT, LV instruments & relays
4.7	Transparent inspection window	For cable compartment at height of cable termination.
4.8	Bus end cable box	For direct cable feeder from bus
4.9	Rear Doors	Rear doors shall not be interlocked i.e. all door opening shall be independent to each other.

DocUUID : 23f7dc1d-9724-406f-b48e-bdff68bb2c4f

4.10	Breaker compartment door	Separate, with lockable handle (Design with breaker trolley as the front cover is not acceptable). Door of one panel should not cause hindrance for opening of adjacent panel.
4.11	Inter compartmental connections	
4.11.1	Breaker to bus bar compartment	Through seal-off bushings
4.11.2	Breaker to cable compartment	Through seal-off bushings
4.12	Nut Bolt	Shall be as less as possible for ease of opening of compartments
4.13	Pressure relief devices	To be provided for each HV compartment
4.14	Bus support insulator	Non-hygroscopic, track-resistant, high strength, Epoxy insulators (Calculation for validating dynamic force withstand capability to be submitted during detailed engineering)
4.15	Fixing arrangement	Doors - Concealed hinged, door greater than 500mm shall have minimum three sets of hinges Covers - SS bolts Gasket - Neoprene
4.16	Required HV cable termination height in the cable compartment	650 mm for 11 KV. 1000mm for 33 KV
4.17	Panel Base Frame	Steel Base frame as per manufacturer's standard.
4.18	Handle	Removable bolted covers with handle for cable chamber and busbar chamber. Panel no./identification to be provided on cable box cover also.

DocUUID : 23f7dc1d-9724-406f-b48e-bdff68bb2c4f

4.19	APFC	a. Controlling of Capacitor Banks' switching shall be done by APFC. Although APFC shall not be in bidder's scope, Space for cut out shall be provided in the Capacitor panel. Space requirement-150X150 mm^2 b. Wiring of Bus PT , Incomer CT and Capacitor CT upto spare terminal for APFC shall also be provided in Capacitor Panel
4.20	Technical particulars	As per Annexure –C

5 CIRCUIT BREAKER

5.1	Type	Truck or cassette type
5.2	Mounting	On withdrawable truck or carriage, with locking facility in service position.
5.3	Switching duty	c. Transformer (oil filled and dry type) d. Motor (of small and large ratings – DOL starting with starting current 6 to 8 times the full load current & with a maximum of 3 starts per hour) e. Underground cable with length up to 10 km
5.4	Interrupting medium	Vacuum
5.5	Contact	Tulip contact shall be provided without any gap between contacts
5.6	Breaker operation	Three separate identical single pole units operated through the common shaft
5.7	Operating Mechanism	Re-strike free, Trip free, with electrical anti-pumping feature
5.7.1	Type	Motor wound, spring charged, stored energy type with manual charging facility
5.7.2	Operation on supply failure	One O-C-O operation possible after failure of power supply to the spring charging motor
5.8	Breaker indications & push buttons	

DocUUID : 23f7dc1d-9724-406f-b48e-bdff68bb2c4f

5.8.1	ON/ OFF / Emergency trip push button	a. Manual / mechanical. b. Emergency Off push button should be provided with a protective flap. c. Mechanical ON shall have padlocking facility.
5.8.2	Mechanical ON – OFF indication	On breaker trolley front
5.8.3	Operation counter	On breaker trolley front
5.8.4	Test-service position indicator	On breaker trolley front
5.8.5	Mechanism charge / discharge indicator	On breaker trolley front
5.9	Breaker positions	Service, Test and Isolated
5.10	Inter changeability	Possible, only with breaker of same rating
5.11	Breaker Control	On panel front only
5.12	Handle	Breaker shall be provided with handles for easy handling, rack in–out operation and manual spring charging as applicable.
5.13	Pin Sequence and Configuration of Pin of Adaptor Plug	(a) Pin sequence and No of Pins of Adaptor plug shall be same in Outgoing and Capacitor Panel (b) Pin sequence and No of Pins of Adaptor plug shall be same in Incoming and Bus Coupler Panel
5.14	Technical particulars	As per Annexure-C

6 FUNCTIONAL REQUIREMENTS

6.1	Interlocks	
6.1.1	Breaker compartment door opening	Opening of door and rack out to test/isolated position should be possible with breaker in OFF position only.
6.1.2	Breaker compartment door closing	Should be possible even when breaker is in isolated position
6.1.3	Racking mechanism safety interlock	Mechanical type
6.1.4	Racking in or out of breaker inhibited	When the breaker is closed

DocUUID : 23f7dc1d-9724-406f-b48e-bdff68bb2c4f

6.1.5	Racking in the circuit breaker inhibited	Unless the control plug is fully engaged
6.1.6	Disconnection of the control plug inhibited	As long as the breaker is in service position
6.1.7	Opening of cable compartment cover of Incomer Panels inhibited	As long as cable end is alive
6.2	Safety Devices	
6.2.1	Exposure to live parts	In case the breaker panel door is required to be opened during a contingency, the personnel should not be exposed to any live part. Suitable shrouds/barriers/insulating sleeves should be provided.
6.2.2	Breaker handing	In case the breaker is mounted on a carriage which does not naturally roll out on the floor, a trolley for handling the breaker is to be provided.
6.3	Operation of breaker	In either service or test position
6.3.1	Closing from local	Only when local/remote selector switch is in local position
6.3.2	Closing from remote	Only when local/remote selector switch is in remote position
6.3.3	Tripping from local	Only when local/remote selector switch is in local position
6.3.4	Tripping from remote	Only when local/remote selector switch is in remote position
6.3.5	Tripping from protective relays	Irrespective of position of local/remote switch
6.3.6	Testing of breaker	In test or isolated position keeping control plug connected
6.4	Safety shutters.	

DocUUID : 23f7dc1d-9724-406f-b48e-bdff68bb2c4f

6.4.1	Automatic safety shutter for female primary disconnects	To fully cover contacts when breaker is withdrawn to test. Independent operating mechanism for bus bar & cable side shutters, separately pad-lockable in closed position.
6.4.2	Label for identification	For Bus side and cable side shutters
6.4.3	Warning label on shutters of incoming and other connections	Clearly visible label "Isolate elsewhere before earthing" be provided
6.5	Breaker electrical operation features	
6.5.1	Trip circuit supervision	To be given for breaker close & open condition
6.5.2	Trip circuit supervision relay contact	For indication, alarm & to inhibit closing of breaker
6.5.3	Emergency trip push button contact	Wired directly to trip coil (wired to Master trip relay if second trip coil provided)
6.5.4	Emergency trip push button contact	Wired to inhibit closing of breaker
6.5.5	Master trip relay contact (if given)	Wired to inhibit closing of breaker
6.5.6	Tripping or opening of breaker through relay but not routed through Lockout (Example- SCADA Opening, Undervoltage, Overvoltage)	Wired to Contact multiplication Relay and then from CMR to tripping of breaker
6.5.7	Closing of breaker through relay	Wired to Contact multiplication Relay and then from CMR to closing of breaker
6.6	DC control supply bus in all panels	Fed by two DC incoming sources in Bus coupler panel with auto changeover facility
6.7	PT supply bus in all panels	Fed normally by bus PT with automatic changeover facility to incomer line PT
6.8	Flaps for Internal Arc Protection	Flaps shall not have any pores/ opening during normal operation

DocUUID : 23f7dc1d-9724-406f-b48e-bdff68bb2c4f

7 SURGE SUPPRESSOR

7.1	Provision	To be provided in all panels except bus coupler and BPT.
7.2	Type	Gapless, metal oxide type
7.3	Technical particulars	As per Annexure -C

8 CURRENT TRANSFORMER

8.1	Type	Shall be cast resin type with insulation class of E or better.
8.2	Rating and technical particulars	As per Annexure – C (Technical particulars) and Annexure – F (SLDs)
8.3	CBCT	If specified, bidder shall clearly mention his proposal for mounting the same.

9 POTENTIAL TRANSFORMER

9.1	Type	Shall be cast resin type with insulation class of E or better.
9.2	Rating and technical particulars	As per Annexure – C (Technical particulars) and Annexure – F (SLDs)
9.3	Mounting	It shall be mounted on a withdrawable carriage. Mounting of PT on the breaker truck is not acceptable. Mounting of PT on the panel top is also not acceptable. Primary PT fuse shall be easily accessible.
9.4	Neutral	The HV neutral connection to earth shall be easily accessible for disconnection during HV test.

10 FEEDER AND BUS EARTHING

10.1	Earthing arrangement	Through separate earthing truck for bus & feeder
10.2	Short time withstand capacity of earthing truck	Equal to rating of breaker. Refer technical parameters.
10.3	Operation from front	Mechanically operated by separate switch.

DocUUID : 23f7dc1d-9724-406f-b48e-bdff68bb2c4f

10.4	Interlocks and Alarm	To prevent inadvertent closing on live circuit, with padlocking arrangement to lock truck in close or open position.

11 EQUIPMENT EARTHING

11.1	Material of earthing bus	Aluminium
11.2	Earthing Bus Position	It shall run through whole switchgear passing nearer to Power Cable Position
11.3	Earth bus joints	All bolted joints in the bus should be made by connection of two bolts.
11.4	Rating	Sized for rated short circuit current for 3 seconds
11.5	Enclosure & non -current carrying part of the switchboard / components	Effectively bonded to the earth bus.
11.6	Hinged doors	Earthed through flexible copper braid
11.7	Circuit breaker frame /carriage	Earthed before the main circuit breaker contacts/ control circuit contacts are plugged in the associated stationary contacts
11.8	Metallic cases of relays, instruments and other LT panel mounted equipment	Connected to the earth bus by independent copper wires of size not less than 2.5 sq. mm with green colour insulation. For this purpose LT compartment should have a clear designated earth bus to which earth connections from all components are to be connected.
11.9	CT and PT neutral	Earthed at one place at the terminal blocks through links.

12 METERS

12.1	Mounting	Flush mounted
12.2	Multifunction Meter	
12.2.1	SCADA Interfacing	RS485 rear port suitable for integration on Modbus Protocol
12.2.2	Size	96x96 mm^2

DocUUID : 23f7dc1d-9724-406f-b48e-bdff68bb2c4f

12.2.3	Panels where to be provided	All panels except Bus PT Panel
12.2.4	Accuracy Class	0.2
12.2.5	Signal List	R-Ph Current, Y-Ph Current, B-Ph Current, Neutral Current, R-Y Ph Voltage, Y-B Ph Voltage, B-R Ph Voltage, Active Power, Active Energy, Reactive Power, Power Factor, Max Demand, Phase angle 1, Phase angle 2, Phase angle 3, THD Mean Current, THD Mean Voltage
12.2.6	Data Type	MFI
12.2.7	Compatibility with RTU	ABB 560
12.2.8	Programmability	CT secondary shall be programmable i.e for both 1 A and 5 A
12.2.9	Auxiliary Supply	a. 48 – 240VDC and AC i.e universal type. b. Although in Scheme, MFM must be wired up with DC only
12.3	Voltmeter	Digital type with programmable ratio
12.3.1	Size	96x96 mm^2
12.3.2	Panels where to be provided	Incomer and bus PT panel
12.3.3	Voltmeter switch	Inbuilt in meter
12.3.4	Accuracy Class	1.0
12.4	Energy meter provision	Energy meter is not in supplier's scope. Only space and CT/PT wiring is to be provided in all panels except bus coupler and bus PT. Space for Energy meter shall be 200(w) X 350(h) mm^2

13 INDICATION, ALARMS & ANNUNCIATION

13.1	Indications	Flush mounted, High intensity, clustered LED type
13.1.1	Breaker ON	Red
13.1.2	Breaker Off	Green
13.1.3	Spring Charged	Blue
13.1.4	DC control supply fail	Amber
13.1.5	AC control supply fail	Amber
13.1.6	Auto trip	Amber
13.1.7	Test Position	White
13.1.8	Service Position	White

DocUUID : 23f7dc1d-9724-406f-b48e-bdff68bb2c4f

13.1.9	Heater circuit healthy	Yellow (Indication with integrated push button for checking)
13.1.10	Trip circuit healthy	White
13.1.11	PT supply as applicable	R,Y B
13.2	Annunciator (For 33kV Panels only)	
13.2.1	Type	Static type alongwith alarm. Annunciations shall be repetitive type and shall be capable of registering the fleeting signal. Fascia test facility should also be provided.
13.2.2	Note	LED type indications may not be provided for alarm signals provided on annunciator.
13.2.3	Mounting	Flush mounted
13.2.4	Fascia	12 window
13.2.5	Signals to provided on Fascia	Window 1 – Main Protection Operated (Distance /Differential) Window 2 – Backup O/C & E/F Protection Operated Window 3 – LBB operated Window 4 – CB Autotrip Window 5 – Trip Circuit Unhealthy Window 6 – DC Fail Window 7 – AC Fail Window 8 – VT Fuse Fail Window 9 – Protection Relay Faulty
13.2.6	Push Buttons	For test, accept and reset
13.2.7	Potential Free Contacts	To be provided for event logger
13.3	Alarm scheme with isolation switch	a. For DC fail, TC fail and CB auto trip in 11kV panels b. For all signals wired to annunciator in 33kV panels

DocUUID : 23f7dc1d-9724-406f-b48e-bdff68bb2c4f

Sequence of operation of the annunciator shall be as follows-

S No.	Alarm Condition	Fault Contact	Visual Annunciation	Audible Annunciation
a.	Normal	Open	Off	Off
b.	Abnormal	Close	Flashing	On
c.	Accept	Close	Steady on	Off
d.	Return to normal	Open	Steady On	Off
e.	Reset	Open	Off	Off
f.	Reset before return to normal	Close	Flashing	On

14 SELECTOR SWITCHES & PUSH BUTTONS

14.1	Selector switches	Flush mounted on LV compartment door, with shrouded terminals
14.1.1	TNC switch with pistol grip	Lockable, spring return to normal position
14.1.2	Local / SCADA selector switch	2 pole Lockable Switch
14.1.3	Rotary ON/OFF switches	For heater / illumination circuit
14.1.4	Rating	16 A
14.2	Push Button	Flush mounted on LV compartment door, with shrouded terminals
14.2.1	Emergency trip push button	Red color with stay put
14.2.2	Accept push buttons	Black color – Trip alarm / DC fail alarm
14.2.3	Reset push buttons	Yellow color – Trip alarm / DC fail alarm
14.2.4	Rating	10 A

15 INTERNAL WIRING

15.1	Internal wiring	1100 V grade, PVC insulated (FRLS) stranded flexible copper wire.
15.2	Size	2.5 sq mm for CT circuit, 1.5 sq mm for PT & control circuits
15.3	Colour code	
15.3.1	CT & PT	R Ph – Red Y Ph – Yellow B Ph – Blue Neutral – Black

DocUUID : 23f7dc1d-9724-406f-b48e-bdff68bb2c4f

15.3.2	Others	DC– grey, AC-black, Earth – green
15.4	Ferrules	At both ends of wire
15.5	Ferrule type	Interlocked type (one additional red colour ferrule for all wires in trip circuit)
15.6	Lugs	Tinned copper, pre-insulated, ring type, fork type and pin type as applicable. CT circuits should use ring type lugs only.
15.7	Spare contacts	Spare contacts of relays and contactors etc. should be wired upto the terminal block.
15.8	Wiring enclosure	Plastic channels, Inter panel wiring through PVC sleeves
15.9	Interpanel wiring	Wires with ferrule to be terminated in the adjacent shipping section should be supplied with one end terminated and the other end bunched and coiled.
15.10	Auxiliary supply	Auxiliary bus wiring for AC and DC supplies, voltage transformer circuits, annunciation circuits and other common services shall be provided on the same set of terminals in all the panels with proper segregation.

16 TERMINAL BLOCKS

16.1	Rating and Type	1100 V grade, moulded piece, stud type screw driver operated terminals complete with insulated barriers, washers, nuts and lock nuts.
16.2	Segregation	TBs shall be segregated.
16.3	Suitability	Terminal Block shall be Stud Type Screw Driver Operated suitable for 6sqmm control cable. Disconnecting facility shall be provided in CT and PT terminal. Shorting and Earthing facility shall be provided in CT
16.4	Marking and covers	White fibre markings strip with clear plastic, slip-on / clip-on terminal covers to be provided.
16.5	Disconnecting Facility	To be provided in CT and PT terminals

DocUUID : 23f7dc1d-9724-406f-b48e-bdff68bb2c4f

16.6	Shorting & Earthing Facility	To be provided in CT Terminals
16.7	Spare Terminals	20% in each TB row
16.8	Spare Terminal Block in Capacitor Bank Panel	Separate Terminal Block with 50 number terminals required (20 Numbers Disconnecting and 30 Number Non Disconnecting type)
16.9	TB shrouds & separators	Moulded non- inflammable plastic material
16.10	Clearance between 2 sets of TB	100 mm min
16.11	Clearance with cable gland plate	250 mm min
16.12	Clearance between AC / DC set of TB	100 mm min
16.13	Test terminal blocks	Screw driver operated stud type for metering circuit

17 RELAYS

17.1	Protection Relays – General Features	
17.1.1	Technology and Functionality	Numerical , microprocessor based with provision for multifunction protection, control, metering and monitoring
17.1.2	Mounting	Flush Mounting, IP5X
17.1.3	Architecture	Hardware and software architecture shall be modular and disconnectable to adapt the protection and control unit to the required level of complexity as per the application.
17.1.4	Programming and configuration	Relay shall utilize a user friendly setting and operating multi-lingual software in windows environment with menus and icons for fast access to the data required. Programming software and communication cord for offered relays should be included in scope of supply.
17.1.5	Conformal Coating	a. Required on all cards and Components to protect against moisture, dust, chemicals, temperature extremes etc b. Testing shall be as per IEC 60068-2-60

DocUUID : 23f7dc1d-9724-406f-b48e-bdff68bb2c4f

17.1.6	SCADA Interface port	LC type Dual fibre optic port for interfacing with SCADA on IEC 61850 & PRP compatible. Through this port relays shall be connected to Ethernet switches..
17.1.7	Processing Indications	SCADA functions for monitoring shall be executed on SPI (Single Point Input) and DPI (Double Point Input). DPI shall only be used in case of Isolator and Circuit breaker “close” and “open” indication.
17.1.8	Command Processing	Functionality of command processing offered for SCADA interface shall include the processing of single and double commands i.e SCO (Single Command Output) and DCO (Double object command Output). DCO shall only be used in case of Isolator and Circuit Breaker “close” and “open” command.
17.1.9	PC Interface port	Front port (preferably serial) for configuration/data downloads using PC. Cost of licensed software and communication cord, required for programming of offered protection relays shall be included in the cost of switchgear.
17.1.10	User Interface	An alphanumeric key pad and graphical LCD display with backlight indicating measurement values and operating messages. It should be possible to access and change all settings and parameters without the use of PC.
17.1.11	SCADA Interface	Relay shall communicate all measured & monitored parameters, analog signals, event record, fault record, DIs , DOs etc to SCADA
17.1.12	Relay Characteristics	Relay shall integrate all necessary protections for different applications in accordance with IS and IEC. Relay shall provide wide setting ranges and choice of all IEC, IEEE and other tripping curves through a

DocUUID : 23f7dc1d-9724-406f-b48e-bdff68bb2c4f

		minimum of two setting groups.
17.1.13	GOOSE Messaging	Relays shall communicate all status signals, commands and events on GOOSE messaging.
17.1.14	Event and Fault records	Relay shall have the facility of recording of various parameters during event/fault with option to set the duration of record through settable pre fault and post fault time. Relay shall store records for last 10 events and 10 faults (minimum). It should be possible to download records locally to PC and remotely to SCADA.
17.1.15	Self diagnosis	Relay shall be able to detect internal failures. A watchdog relay with changeover contact shall provide information about the failure.
17.1.16	Time synchronization	All relays shall be capable of being synchronized with the system clock using SCADA interface and PC.
17.1.17	Operation Indicators	LEDs with push button for resetting.
17.1.18	Test Facility	Inbuilt with necessary test plugs.
17.2	Protection Relays for 11kV Incomer panel	
17.2.1	Relay 1	3-phase Directional Overcurrent and Earthfault protection with IDMT, Definite time and instantaneous characteristics
		Undervoltage and overvoltage protection
		Trip Circuit Supervision
		Sync Check function
		PT supervision (fuse failure monitoring)
		Relay shall communicate all measured and monitored parameters like current, voltage, active power, reactive power, apparent power, power factor, phase angle, event record, fault record, DIs ,

DocUUID : 23f7dc1d-9724-406f-b48e-bdff68bb2c4f

		DOs etc to SCADA
17.2.2	Relay 2	Auto Re-closer (If Specified in Tender document)
		High Impedance Restricted Earth fault protection.
17.2.3	User Configurable DIs and Dos	Relay-1 & 2 should have a total of 16 Dis and 10 Dos (minimum). Each relay should have atleast 2 Dis and 4 Dos
17.2.4	Note	Combining functions of Relay-1 and Relay-2 in single relay is not acceptable.
17.2.5	SLD	Refer annexure – F1
17.3	Protection Relays for 11kV Bus Section panel	
17.3.1	Relay 1	3-phase Overcurrent and Earthfault protection with IDMT, Definite time and instantaneous characteristics
		Sync Check function
		Trip Circuit Supervision
		PT supervision (fuse failure monitoring)
		User Configurable 16 Dis and 8 Dos (minimum)
		Relay shall communicate all measured and monitored parameters like current, voltage, active power, reactive power, apparent power, power factor, phase angle, event record, fault record, DIs , DOs etc to SCADA
		Auto Re-closer (If Specified in Tender document)
17.3.2	SLD	Refer annexure – F2
17.4	Protection Relays for 11kV Outgoing panel	
17.4.1	Relay 1	3-phase Overcurrent and Earthfault protection with IDMT, Definite time and instantaneous characteristics
		Trip Circuit Supervision
		User Configurable 12 Dis and 6 Dos (minimum)
		Relay shall communicate all measured and monitored parameters like current, voltage, active

DocUUID : 23f7dc1d-9724-406f-b48e-bdff68bb2c4f

		power, reactive power, apparent power, power factor, phase angle, event record, fault record, DIs , DOs etc to SCADA
		Auto Re-closer (If Specified in Tender document)
17.4.2	SLD	Refer annexure – F3
17.5	Protection Relays for 11kV Station Transformer panel	
17.5.1	Relay 1	3-phase Overcurrent and Earthfault protection with IDMT, Definite time and instantaneous characteristics
		Trip Circuit Supervision
		User Configurable 12 DIs and 6 DOs (minimum)
		Relay shall communicate all measured and monitored parameters like current, voltage, active power, reactive power, apparent power, power factor, phase angle, event record, fault record, DIs , DOs etc to SCADA
		Auto Re-closer (If Specified in Tender document)
17.5.2	SLD	Refer annexure – F4
17.6	Protection Relays for 11kV Capacitor panel	
17.6.1	Relay 1	3-phase Overcurrent and Earthfault protection with IDMT, Definite time and instantaneous characteristics
		Undervoltage and Overvoltage protection(From Bus PT)
		Trip Circuit Supervision
		Neutral Unbalance protection(From RVT associated to Cap Bank)
		Timer for on time delay (minimum 600 seconds)
		User Configurable 12 DIs and 6 DOs (minimum)
		Relay shall communicate all measured and monitored parameters like current, voltage, active power, reactive power, apparent power, power

DocUUID : 23f7dc1d-9724-406f-b48e-bdff68bb2c4f

		factor, phase angle, event record, fault record, DIs , DOs etc to SCADA
		Auto Re-closer (If Specified in Tender document)
17.6.2	SLD	Refer annexure – F5.
17.7	Protection Relays for 33kV Incomer	
17.7.1	Relay 1	Line differential protection (Dual channel, ST Port Compatible for Single Mode Fibre having wavelength 1310 nm)
		Distance Protection
		Software based CT ratio correction
		Dedicated port for communication with remote end relay through optical fibre. This port should be in addition to PC interface and SCADA interface ports.
17.7.2	Relay 2	Bay control unit having MIMIC with 3-phase Directional Overcurrent and Earthfault protection with IDMT, Definite time and instantaneous characteristics.
		Trip Circuit Supervision
		Sync check function
		Under Frequency, Over Frequency, Rate of Change of Frequency
		Circuit Breaker failure protection
		Reverse blocking function
		PT supervision
		Relay shall communicate all measured and monitored parameters like current, voltage, active power, reactive power, apparent power, power factor, phase angle, event record, fault record, DIs , DOs etc to SCADA
		Auto Re-closer (If Specified in Tender document)
17.7.3	User Configurable DIs and Dos	Relay-1 & 2 should have a total of 16 DIs and 12 DOs (minimum). Each relay should have atleast 2 DIs and 6 Dos

DocUUID : 23f7dc1d-9724-406f-b48e-bdff68bb2c4f

17.7.4	Note	Combining functions of Relay-1 and Relay-2 in single relay is not acceptable.
17.7.5	SLD	Refer annexure – F6
17.8	Protection Relays for 33kV Transformer Feeder Panel	
17.8.1	Relay 1	Biased differential protection
		REF protection
		Software based ratio and vector correction feature (without ICT)
		H2 and H5 harmonic restraint
17.8.2	Relay 2	Bay control unit having MIMIC with 3-phase Overcurrent and Earthfault protection with IDMT, Definite time and instantaneous characteristics
		Trip Circuit Supervision
		Under Frequency, Over Frequency, Rate of Change of Frequency
		Reverse Blocking function
		Circuit Breaker failure protection
		Relay shall communicate all measured and monitored parameters like current, voltage, active power, reactive power, apparent power, power factor, phase angle, event record, fault record, DIs , DOs etc to SCADA
		Auto Re-closer (If Specified in Tender document)
17.8.3	User Configurable DIs and DOs	Relay-1 & 2 should have a total of 16 DIs and 12 DOs (minimum). Each relay should have atleast 2 DIs and 6 DOs.
17.8.4	Note	Combining functions of Relay-1 and Relay-2 in single relay is not acceptable.
17.8.5	SLD	Refer annexure – F7
17.9	Protection Relays for 33kV Buscoupler Panel	
17.9.1	Relay 1	Bay control unit having MIMIC with 3-phase Overcurrent and earthfault protection with IDMT,

DocUUID : 23f7dc1d-9724-406f-b48e-bdff68bb2c4f

		Definite time and instantaneous characteristics.
		Trip Circuit Supervision
		Sync check function
		Reverse Blocking Function
		Circuit Breaker failure protection
		PT supervision (fuse failure monitoring) for Bus PT-1
		User Configurable 16 DIs and 8 DOs (minimum)
		Relay shall communicate all measured and monitored parameters like current, voltage, active power, reactive power, apparent power, power factor, phase angle, event record, fault record, DIs , DOs etc to SCADA
17.9.2	Relay 2	Under Frequency, Over Frequency, Rate of Change of Frequency
		PT supervision (fuse failure monitoring) for Bus PT-2
		Auto Re-closer (If Specified in Tender document)
17.9.3	SLD	Refer annexure – F8
17.10	Protection Relays for 33kV Outgoing Panel (For Installation at KCC Consumer Premises)	
17.10.1	Relay 1	Bay control unit having MIMIC with 3-phase Overcurrent and Earthfault protection with IDMT, Definite time and instantaneous characteristics
		Trip Circuit Supervision
		Reverse Blocking Function
		Under Frequency, Over Frequency, Rate of Change of Frequency
		Circuit Breaker failure protection
		User Configurable 12 DIs and 6 DOs (minimum)
		Relay shall communicate all measured and monitored parameters like current, voltage, active power, reactive power, apparent power, power

DocUUID : 23f7dc1d-9724-406f-b48e-bdff68bb2c4f

		factor, phase angle, event record, fault record, DIs , DOs etc to SCADA
		Auto Re-closer (If Specified in Tender document)
17.10.2	SLD	Refer annexure – F9
17.11	Protection Relays for 33kV Incomer from 66/33kV Autotransformer	
17.11.1	Relay 1	High Impedance Restricted Earth fault protection
17.11.2	Relay 2	Bay control unit having MIMIC with 3-phase Overcurrent and Earthfault protection with IDMT, Definite time and instantaneous characteristics
		Trip Circuit Supervision
		Under Frequency, Over Frequency, Rate of Change of Frequency
		Reverse Blocking Function
		Sync check function
		Undervoltage and overvoltage protection
		Circuit Breaker failure protection
		PT supervision (fuse failure monitoring)
		Relay shall communicate all measured and monitored parameters like current, voltage, active power, reactive power, apparent power, power factor, phase angle, event record, fault record, DIs , DOs etc to SCADA
		Auto Re-closer (If Specified in Tender document)
17.11.3	User Configurable DIs and DOs	Relay-1 & 2 should have a total of 16 DIs and 12 DOs (minimum). Each relay should have atleast 2 DIs and 6 Dos
17.11.4	Note	Combining functions of Relay-1 and Relay-2 in single relay is not acceptable
17.11.5	SLD	Refer annexure – F10
17.12	Protection Relays for 33kV Outgoing from 66/33kV Autotransformer	
17.12.1		Power swing blocking
	Relay 1	Line differential protection(Dual channel, ST Port

DocUUID : 23f7dc1d-9724-406f-b48e-bdff68bb2c4f

		Compatible for Single Mode Fibre having wavelength 1310 nm)
		Distance Protection
		Software based CT ratio correction
		Dedicated port for communication with remote end relay through optical fibre. This port should be in addition to PC interface and SCADA interface ports.
17.12.2	Relay 2	Bay control unit having MIMIC with 3-phase Overcurrent and Earthfault protection with IDMT, Definite time and instantaneous characteristics.
		PT Supervision
		Under Frequency, Over Frequency, Rate of Change of Frequency
		Trip Circuit Supervision
		Reverse Blocking Function
		Circuit Breaker failure protection
		Relay shall communicate all measured and monitored parameters like current, voltage, active power, reactive power, apparent power, power factor, phase angle, event record, fault record, DIs , DOs etc to SCADA
		Auto Re-closer (If Specified in Tender document)
17.12.3	User Configurable DIs and Dos	Relay-1 & 2 should have a total of 16 DIs and 12 DOs (minimum). Each relay should have atleast 2 DIs and 6 Dos
17.12.4	Note	Combining functions of Relay-1 and Relay-2 in single relay is not acceptable.
17.12.5	SLD	Refer annexure – F11
17.13	Protection Relays for 33kV Buscoupler for Switchboard of 66/33kV Autotransformer	
17.13.1	Relay 1	Bay control unit having MIMIC with 3-phase Overcurrent and earthfault protection with IDMT, Definite time and instantaneous characteristics.
		Trip Circuit Supervision

DocUUID : 23f7dc1d-9724-406f-b48e-bdff68bb2c4f

		Sync check function
		Circuit Breaker failure protection
		PT supervision (fuse failure monitoring) for Bus PT-1
		User Configurable 16 DIs and 8 DOs (minimum)
		Relay shall communicate all measured and monitored parameters like current, voltage, active power, reactive power, apparent power, power factor, phase angle, event record, fault record, DIs , DOs etc to SCADA
17.13.2	Relay 2	Under Frequency, Over Frequency, Rate of Change of Frequency
		PT supervision (fuse failure monitoring) for Bus PT-2
		Auto Re-closer (If Specified in Tender document)
17.13.3	SLD	Refer annexure – F12
17.14	Protection Relays – SCADA Interfacing	
17.14.1	Configuration and wiring of DIs in Protection Relays (All panels) for routing status signals to SCADA	DI-1 – TC-1 Healthy DI-2 – TC-2 Healthy DI-3 – CB Autotrip (contact from lockout relay) DI-4 – CB Open DI-5 – CB Close DI-6 – CB in service DI-7 – CB in test DI-8 – Spring Charged DI-9 – L/R switch Remote DI-10 – AC fail DI-11 – Adjacent Panel DC Fail/DC MCB Trip DI-12 – Adjacent Panel Protection Relay fail DI-13 – PT MCB trip (metering and protection, for incomer and capacitor panel only) Sequence of DIs should be strictly as mentioned above. Change in sequence of DIs will not be acceptable.
17.14.2	Configuration and wiring of	DO-1 – CB Open

DocUUID : 23f7dc1d-9724-406f-b48e-bdff68bb2c4f

	DOs in Protection relays (all panels) for execution of SCADA commands through SCADA interface port (refer clause 16.1.5).	DO-2 – CB close DO-3-Electrical Reset Sequence of DOs should be strictly as mentioned above. Change in sequence of DOs will not be acceptable.
17.14.3	Looping of numerical relays	All relays in the switchboard have to be looped to form a common bus for interfacing with SCADA.
17.14.4	Spare DIs and DOs	Should be wired upto terminal block for future use.
17.15	Transformer Monitoring cum AVR Relay	
17.15.1	Features	As per annexure –B
17.15.2	Requirement	To be provided in 33KV Transformer panel only
17.16	Auxiliary Relays – General Features	
17.16.1	Relays for auxiliary, supervision, trip and timer relays	Static or electromechanical type.
17.16.2	Reset mechanism for auxiliary relays	Self reset contacts except for lock-out relays.
17.16.3	Reset mechanism for lockout relays	Electrical reset type for 11kV outgoing panels only. Hand reset type for all other panels.
17.16.4	Operation indicators	With hand-reset operation indicators (flags) or LEDs with pushbuttons for resetting.
17.17	Auxiliary relays – Requirement	
17.17.1	Anti pumping (94), lockout (86),	a. For each breaker b. Lock Out Relay mounting shall be flush type on front side of Panel
17.17.2	PT selection relays	To be provided in bus coupler panel for selection between Bus PT and Line PT of respective sections.
17.17.3	Switchgear with two incomer & bus coupler	Lockout relay (86) contact of each incoming breakers to be wired in series in closing circuit of other incoming breakers & bus coupler.
17.17.4	Contact Multiplication Relay for Tripping and closing of Breaker	a. One for Tripping and one for closing with each breaker b. Current Rating shall be 30 percent more than closing and tripping coil current rating c. Shall be of closed type i.e. direct

DocUUID : 23f7dc1d-9724-406f-b48e-bdff68bb2c4f

		unauthorised access shall not be provided.
17.17.5	Auxiliary Relays, contact multiplication relays etc.	To effect interlocks and to exchange signals of status & control
17.17.6	Transformer trouble relays (For 33kV Transformer feeder panel only)	Auxiliary relays with indicating flags (contactors will not be accepted) should be provided for the following trip and alarm commands – a. Buchholz trip b. OSR trip c. PRV trip d. SPR trip e. WTI Trip f. OTI Trip g. Buchholz Alarm h. Low oil level alarm i. OTI Alarm j. WTI Alarm.
17.18	General Requirements for all relays/contactors	Auxiliary supply will be 50/220VDC based on requirement. All relays/contactors shall be suitable for continuous operation at 15% overvoltage.

18 SYNCH CHECK PHILOSOPHY

18.1	Dead Bus – Live Line	a. Application - Required for Charging of Bus from Line Supply b. Logic - Sync check relay installed on line panel will check the line and bus voltage and derive that the line is live and bus is in dead condition i.e bus has to be charged by the line breaker. Hence Sync check relay will allow the line breaker to close in this condition.
18.2	Dead Line – Live Bus	a. Application - Required for Charging of Line from Bus Supply b. Logic - Sync check relay installed on line panel will check line and bus voltage and derive that the line is dead and bus is in live condition i.e line has to charged from bus. Hence Sync check relay will allow the line breaker to close in this condition.

DocUUID : 23f7dc1d-9724-406f-b48e-bdff68bb2c4f

18.3	Live Bus – Live Line	a. Application - Required for paralleling of bus and line supply b. Logic - Sync check relay installed on line panel will compare magnitude and phase sequence of line and bus voltages. If the variations are within the range set in the relay, sync check relay will allow the closing of line breaker.
18.4	Live Bus – Dead Bus	a. Application – Required for charging of dead bus through another live bus. b. Logic – Sync check relay installed on bus coupler/bus section panel will check voltage of both buses and derive that one bus is dead and other bus is live i.e dead bus is being charged from live bus. Hence Sync check relay will allow the bus coupler/bus section breaker to close in this condition.
18.5	Live Bus – Live Bus	a. Application – Required for paralleling of two buses/bus sections. b. Logic – Sync check relay installed on bus coupler/bus section panel will compare the magnitude and phase sequence of voltage of both buses (or bus sections). If the variations are within the range set in the relay, sync check relay will allow the bus coupler/bus section breaker to close.

19 ETHERNET SWITCHES & FIBRE OPTICS

19.1	Ethernet Switch	
19.1.1	Numbers	Two at each site
19.1.2	FO Port	16 Nos
19.1.3	RJ 45 Port	4 Nos
19.1.4	Communication Protocol	IEC 61850
19.1.5	Network Protocol	PRP
19.1.6	Downlink Rate	100 MBPS
19.1.7	Uplink Rate	1 GBPS
19.1.8	Coating	Conformal
19.1.9	Power Supply Voltage	220 / 50 VDC as per site condition
19.1.10	Grade	Industrial
19.1.11	Certification required	KEMA,CE & FCC for IEC 61850 compliance
19.1.12	Operating Temperature	
19.1.13	Mounting	In Switchgear Panel
19.1.14	Blinking LED Indicators	On each RJ45 ports

DocUUID : 23f7dc1d-9724-406f-b48e-bdff68bb2c4f

19.1.15	Separate Maintenance/console Part	Required
19.1.16	Latency	Less than or equal to 10 ms
19.1.17	Fibre Optic Compatibility	Multimode, 1310 nm
19.1.18	Placement	Din Rail Arrangement Inside Switchgear
19.2	Fibre Optics (Patch Cord) and Ethernet cable	
19.2.1	Connection	From Relays, Meters to Ethernet Switch
19.2.2	Mode of Fibre Optics	Multimode
19.2.3	Wavelength	1310 nm
19.2.4	Ethernet Cable Type	CAT VI
19.2.5	Associated Connectors and Accessories	Required

20 SPACE HEATERS

20.1	Type	Thermostat controlled with switch for isolation
20.2	Location	In Breaker & HV cable compartment, mounted on an insulator. Heater position in cable compartment should be easily accessible after cable termination. Heater position in breaker chamber shall be accessible with breaker racked-in.

21 SOCKETS, SWITCHES ,ILLUMINATION LAMPS & MCBs

21.1	Illumination lamp with switch	For LV & cable chamber
21.2	Universal type (5/15 A) Socket with Switch	In LV chamber
21.3	MCBs	a. MCBs of Proper rating may be provided. b. Although Main MCB shall be directly wired up to Trip Circuit, No other MCB shall be provided in between c. Rating of MCB shall be 300% of full load current of relevant circuit

DocUUID : 23f7dc1d-9724-406f-b48e-bdff68bb2c4f

22 NAMEPLATES AND MARKING

22.1	Nameplates	To be provided as per the following description
22.1.1	Equipment Nameplates	a. All equipment mounted on front side as well as equipment mounted inside the panels shall be provided with individual name plates with equipment designation engraved. b. All front mounted equipment shall be also provided at the rear with individual name plates engraved with tag numbers corresponding to the one shown in the panel internal wiring to facilitate easy tracing of the wiring.
22.1.2	Feeder Nameplates	a. Large and bold name plate carrying the feeder identification/ numbers shall be provided on the top of each panel on front as well as rear side. On rear side, nameplate should be provided on frame. b. Rear bottom of each panel shall have a nameplate clearly indicating the following: Customer Name – BSES Delhi; PO No. & date; Drawing Reference No. etc.
22.1.3	Rating Plate	Following details are to be provided on Panel rating plate: a. Customer Name – BSES Yamuna Power Limited b. PO No. & Date – c. Complete CT Rating plate details d. Complete PT Rating plate details e. Complete CB Rating Plate details f. Date of Manufacturing- g. Warranty Period- h. Customer care No- i. Control Voltage-
22.1.4	Material	Non-rusting metal or 3 ply lamicoid. Nameplates shall be black with white engraving lettering. Stickers are

DocUUID : 23f7dc1d-9724-406f-b48e-bdff68bb2c4f

		not allowed.
22.1.5	Fixing	All nameplates/rating plates shall be riveted to the panels at all four corners. Bolting/screwing is not acceptable.
22.2	Markings	Each switch shall bear clear inscription identifying its function. Similar inscription shall also be provided on each device whose function is not otherwise identified. If any switch or device does not bear this inscription separate nameplate giving its function shall be provided for it. Switch shall also have clear inscription for each position indicating e.g. Trip-Neutral close, ON-OFF etc.

23 SURFACE TREATMENT & PAINTING

23.1	Surface Treatment	Sand blasting or by seven tank process.
23.2	Paint type	Powder coated. Pure polyester base grade-A structure finish.
23.3	Paint shade	RAL 7032 for external & internal surface
23.4	Paint thickness	Minimum 50 microns

24 APPROVED MAKES OF COMPONENTS

24.1	Numerical Relays	Siprotec series of Siemens, Micom series of Schneider/Alstom. Numerical relays used in complete switchboard should be of same make. Use of two different makes of relays in a switchboard is not acceptable.
24.2	Transformer monitoring cum AVR relay	A-eberle
24.3	Electromechanical Relays	Alstom/Schneider/Siemens/ABB/ER
24.4	Aux Relays	ABB/Jyoti/Omran
24.5	Contactors	ABB/Siemens/Telemechanique

DocUUID : 23f7dc1d-9724-406f-b48e-bdff68bb2c4f

24.6	Instrument transformers	ECS/ Pragati/ Gemini/Schneider/CGL/Kappa/Narayan power tech
24.7	MCBs	Siemens/Schneider/Legrand/ABB
24.8	Control switches	Switron/Kaycee
24.9	Test terminal blocks	IMP/Schneider/Alstom
24.10	Terminal blocks	Elmex/Connectwell
24.11	Indicating lamps	Siemens/ Teknic/ Binay
24.12	Surge Suppressors	Oblum/Tyco
24.13	Meters	Rishabh(Rish delta Energy)/Conzerv
24.14	Ethernet Switch	Ruggedcom/Hirschman

25 INSPECTION , TESTING & QUALITY ASSURANCE

25.1	Type Tests	The product must be of type tested as per applicable Indian standards / IEC
25.1.1	Type test report validity period	Last five years from date of bid submission. Bidder with type test report more than 5 years old needs to re-conduct the tests without any commercial implication to BSES
25.1.2	Pressure relief device operation	Test certificate for panel to be submitted
25.2	Acceptance & Routine tests	As per the specification and relevant standards. Charges for these tests shall be deemed to be included in the equipment price. In addition to these tests, following tests have to be carried out as acceptance tests -
25.2.1	Primary injection test	To be carried out on panels selected for testing
25.2.2	Temperature rise test	One panel per Purchase order (PO with minimum 10 panels) without any commercial implication to BSES. In-house testing is acceptable.
25.2.3	Paint Thickness/ Peel off	To be carried out on panels selected for testing

DocUUID : 23f7dc1d-9724-406f-b48e-bdff68bb2c4f

25.3	Inspection	The purchaser/owner reserves the right to witness all the acceptance/routine tests during inspection.
25.4	Notice to purchaser for conducting type tests	At least three weeks in advance
25.5	Quality Assurance	
25.5.1	Vendor quality plan	To be submitted for purchaser approval
25.5.2	Inspection points	To be mutually identified & agreed in quality plan

26 PACKING

26.1	Packing Protection	Against corrosion, dampness, heavy rains, breakage and vibration. During transportation/ transit and storage, panels may be subjected to outdoor conditions. Hence, packing of each panel shall be weatherproof.
26.2	Packing for accessories and spares	Robust wooden non returnable packing case with all the above protection & identification
26.3	Details of Packing Identification Label on each packing case	a. Individual serial number b. Purchaser's name c. PO number (along with SAP item code, if any) & date d. Equipment Tag no. (if any) e. Destination f. Project Details g. Manufacturer / Supplier's name h. Address of Manufacturer / Supplier / it's agent i. Description and Quantity j. Country of origin k. Month & year of Manufacturing l. Case measurements m. Gross and net weights in kilograms n. All necessary slinging and stacking instructions

DocUUID : 23f7dc1d-9724-406f-b48e-bdff68bb2c4f

27 SHIPPING

27.1	Shipping	The bidder shall ascertain at an early date and definitely before the commencement of manufacture, any transport limitations such as weights, dimensions, road culverts, Overhead lines, free access etc. from the Manufacturing plant to the project site. Bidder shall furnish the confirmation that the proposed Packages can be safely transported, as normal or oversize packages, up to the site. Any modifications required in the infrastructure and cost thereof in this connection shall be brought to the notice of the Purchaser.
		The seller shall be responsible for all transit damage due to improper packing.

28 HANDLING AND STORAGE

28.1	Handling and Storage	Manufacturer instruction shall be followed. Detail handling & storage instruction sheet / manual needs to be furnished before commencement of supply.

29 DEVIATION

29.1	Deviation	Deviations from this Specification shall be provided in excel sheet with tender by reference to the Specification clause/GTP/Drawing and a description of the alternative offer. In absence of such a statement, it will be assumed that the bidder complies fully with this specification.

DocUUID : 23f7dc1d-9724-406f-b48e-bdff68bb2c4f

30 ACCESSORIES & TOOLS

30.1	Type and Quantity	Bidder to indicate
30.2	Special tools & tackles required for erection, testing, commissioning and maintenance of the switchboard	The cost of these items shall be indicated separately in the bid as optional.
30.3	Suitable handling truck / trolley for lifting and moving the circuit breaker	To be supplied. (Two trolleys for each type/rating of breaker)

31 DRAWINGS & DATA SUBMISSION MATRIX

Drawing submission shall be as per the matrix given below. All documents/ drawing shall be provided on A3/A4 sheet (based on legibility) in box file with separators for each section. PDF shall also be provided of all documents via USB. Deviation sheet and GTP shall be provided in excel sheet .Language of the documents shall be English only. Deficient/ improper document/ drawing submission shall be liable for rejection.

S. No	Head	Bid	Drawing Approval	Pre Dispatch	Pre Closure
31.1	Contact Person Name, Email ID and Mobile Number	Required			
31.2	Consolidated Deviation Sheet	Required	Required		
31.3	GTP	Required	Required		
31.4	Relevant Type Test as per IS/IEC	Required			
31.5	Power Cable and control cable Philosophy and Schedule		Required		
31.6	Manufacturer's quality assurance plan and certification for quality standards		Required		
31.7	Sizing Calculation of Associated Equipment		Required		

DocUUID : 23f7dc1d-9724-406f-b48e-bdff68bb2c4f

31.8	Recommended Spares Apart from spares stated in Spec(for five years of operation)		Required		
31.9	11 kV / 33 kV Switchgear drawing				
31.9.1	General Arrangement	Required	Required		
31.9.2	Sectional Layout		Required		
31.9.3	Door Layout		Required		
31.9.4	LV Box Internal Layout		Required		
31.9.5	SLD	Required	Required		
31.9.6	Schematic Circuit diagram and Scheme of Each type of Panel		Required		
31.9.7	Communication Architecture		Required		
31.9.8	Bus Bar Arrangement		Required		
31.9.9	QAP		Required		
31.9.10	Panel wise BOQ		Required		
31.9.11	Logic Operation Diagram		Required		
31.9.12	Plan		Required		
31.9.13	Synch Logic Diagram		Required		
31.9.14	Foundation Diagram		Required		
31.9.15	DI sheet		Required		
31.9.16	DO Sheet		Required		
31.9.17	TB Details		Required		
31.9.18	Make of all Component as per specification		Required		
31.10	Drawing of CT, PT and Surge Arrestor		Required		
31.11	Drawing of Substation Room		Required		
31.12	Ventilation detail requirement of GIS Room		Required		

DocUUID : 23f7dc1d-9724-406f-b48e-bdff68bb2c4f

31.13	Installation, erection and commissioning manual for switchgear		Required		
31.14	Inspection Reports			Required	
31.15	As manufacturing Drawings			Required	
31.16	Operation and Maintenance Manual			Required	Required
31.17	Trouble shooting manual			Required	Required
31.18	As built Drawings				Required
31.19	Test Report				Required
31.20	Weekly progress report				Required

DocUUID : 23f7dc1d-9724-406f-b48e-bdff68bb2c4f

ANNEXURE – A - SCOPE OF SUPPLY

Scope of supply should include the following –

1.1 Design, manufacture, assembly, testing at manufacturer's works, properly packed for transport, supply and FOR delivery at site of following 11kV / 33kV Switchgears as per enclosed specification and single line diagram.

1.2 Base channel frame of the switchgears with hardware.

1.3 Two trolleys for breaker of each size are to be provided per switchboard.

1.4 Programming software and communication cord for numerical relays.

1.5 Unit price of 33kV Incomer with Distance relay as primary protection and 33kV Incomer with Line differential relay as primary protection should be mentioned separately in the bid. Primary protection to be used in Incomer panel will be finalized based on site requirement.

1.6 Unit price of Bus PT should be indicated separately in the bid to enable addition/deletion based on site requirement.

1.7 Bidder should indicate price of one set of special tools and tackles (if any) required for maintenance of switchgear and its components.

1.8 Bidder should indicate price of each spare as per Annexure E.

1.9 All relevant drawings, data and instruction manuals.

DocUUID : 23f7dc1d-9724-406f-b48e-bdff68bb2c4f

ANNEXURE – B – TRANSFORMER MONITORING CUM AVR RELAY

1	General features	
1.1	Technology and Functionality	Microprocessor based with provision for multifunction control and monitoring.
1.2	Mounting	Flush Mounting
1.3	Architecture	Hardware and software architecture shall be modular and disconnectable to adapt the control unit to the required level of complexity as per the application.
1.4	Programming and configuration	AVR shall utilize a user friendly setting and operating multilingual software in windows environment with menus and icons for fast access to the data required.
1.5	User Machine Interface	UMI with an alphanumeric key pad and graphical LCD display with backlight indicating measurement values and operating messages. Capability to access and change all settings and parameters.
1.6	PC Interface port	Front port (preferably serial) for configuration using PC. Cost of licensed software and communication cord, required for programming of offered protection relays using PC, shall be mentioned separately in the bid.
1.7	SCADA Interface port	LC Type Dual fibre optic port for interfacing with SCADA on IEC 61850 & PRP compatible. Through these ports relays shall be connected to Ethernet switches.
1.8	Self diagnosis	Shall be able to detect internal failures. A watchdog relay with changeover contact shall provide information about the failure.
1.9	Cable Termination	Termination of cable shall be at rear side.
1.10	Auxiliary supply	220VDC or 48VDC
2	Inputs and Outputs	
2.1	CT Input	1/5A selectable through programming
2.2	PT Input	110VAC
2.3	Binary Inputs	Sixteen programmable binary inputs should be provided

DocUUID : 23f7dc1d-9724-406f-b48e-bdff68bb2c4f

2.4	Analog Inputs (4-20mA)	One input to be provided
2.5	PT-100 direct input	Two inputs to be provided
2.6	Direct Resistance Input	For tap position indication (18 steps)
2.7	Binary Outputs	Ten programmable binary outputs should be provided
3	Control	
3.1	Control Tasks	Ability to implement control functions through programmable logics
3.2	Voltage setting	Programmable Voltage set point
3.3	Voltage Regulation	Raise/Lower tap position to maintain the preset value of voltage.
3.4	Voltage Regulation modes	Automatic and Manual
3.5	Operation Modes	Local and Remote
3.6	Fan and Pump control	To be provided
3.7	Transformer Paralleling	Capability to parallel transformers whose AVRs are interconnected via a communication network.
4	SCADA Interfacing	
4.1	Configuration of DIs for routing alarm/trip signals to SCADA.	DI-1 – Buchholz trip DI-2 – OSR Trip DI-3 – PRV trip DI-4 – SPR trip DI-5 – OTI trip DI-6 – WTI trip DI-7 – Buchholz alarm DI-8 – Oil Level low alarm (MOG alarm) DI-9 – WTI alarm DI-10 – OTI alarm DI-11 – Tap changer trouble/stuck/out of step DI-12 – Tap changer motor supply fail DI-13 – Tap changer in local control All signals from DI-1 to DI-10 are to be wired up from transformer trouble auxiliary relays.
4.2	Configuration of DOs for	DO-1 – Tap raise

DocUUID : 23f7dc1d-9724-406f-b48e-bdff68bb2c4f

	executing commands from SCADA through interface port/CRP	DO-2 – Tap lower DO-3 – Fan group 1 control DO-4 – Fan group 2 control
4.3	Spare DIs and DOs	To be wired upto the terminal block.
5	Measurement, Event Recording and Monitoring	
5.1	Measured Quantities (optional)	Voltage, Current, Active Power, Reactive Power, Apparent Power, Power factor, frequency
5.2	Event Recording	Facility for recording parameters during various events such as tap change, change in binary input status etc.
5.3	Monitoring	Capability to monitor important transformer parameters such as Oil temperature, Winding Temperature etc and give indication/alarm when the value of a particular parameter exceeds the preset value.

DocUUID : 23f7dc1d-9724-406f-b48e-bdff68bb2c4f

ANNEXURE – C - TECHNICAL PARTICULARS

1.0	SWITCHGEAR		
1.1	Type	Metal clad, air insulated with VCB type circuit breaker	
1.2	Service	Indoor	
1.3	Mounting	Free standing, floor mounted	
1.4	System Voltage	11 KV	33kV
1.5	Voltage variation	+/- 10%	
1.6	Frequency	50 Hz +/- 5%	
1.7	Phase	3	
1.8	Rated voltage	12 KV	36 kV
1.9	Rated current	As per SLDs given in Annexure-F	
1.10	Short time rating for 3 sec.	25kA	25kA
1.11	Internal arc classification and rating		
1.11.1	Classification	IAC – A - FLR	IAC – A - FLR
1.11.2	Rating	25kA for 1 second	25kA for 1 second.
1.12	Insulation level (PF rms / Impulse peak)	28 kV / 75 kV	70 kV/ 170 kV
1.13	System ground	Effectively earthed	Effectively earthed
1.14	Enclosure degree of protection	IP – 4X for high voltage compartment and IP – 5X for metering and protection compartment	
1.15	Bus bar - Main	Rating as per SLDs given in annexure - F, Short time rating as per clause 1.10.	
1.15.1	Material	Tinned Electrolytic copper	
1.15.2	Bus bar sleeve	Sleeved with shrouds on joints. Tape on joints is not acceptable.	
1.15.3	Bus identification	Colour coded	
1.15.4	Temperature rise	40 deg. C for conventional joints. 55 deg. C for silver plated joints	
1.16	Auxiliary bus bar	Electrolytic grade tinned copper	

DocUUID : 23f7dc1d-9724-406f-b48e-bdff68bb2c4f

1.17	Auxiliary DC Supply	220 V DC / 48 V DC	
1.18	Auxiliary AC supply	240 V AC 50 Hz	
1.19	Hardware	Stainless steel.	
1.20	Earth bus	Aluminium	
1.21	Bus duct entry	From top (where ever applicable)	
1.22	Power cable entry	From bottom and rear	
1.23	Control cable entry	From bottom and front (i.e breaker compartment)	
2.0	CIRCUIT BREAKER		
2.1	Voltage class, insulation level, short time rating	As specified for switchgear	
2.2	Rated current	As per SLDs given in annexure - F. Use of two breakers in parallel to meet the required current rating shall not be acceptable.	
2.3	Duty cycle	O – 0.3 sec – CO - 3min - CO	
2.4	Short circuit rating		
2.4.1	A.C sym. breaking current	25kA	25kA
2.4.2	Short circuit making current	62.5kA	62.5kA
2.5	Operation time		
2.5.1	Break time	Not more than 4 cycles	
2.5.2	Make time	Not more than 5 cycles	
2.6	Range of Auxiliary Voltage		
2.6.1	Closing	85% - 110%	
2.6.2	Tripping	70% - 110%	
2.6.3	Spring Charging	85% - 110%	
2.7	No. of spare aux. Contacts of Breaker, for Owner's use.	Minimum 6 NO + 6 NC	
2.8	No. of spare contacts of Service and Test position limit switch	2 NO	

DocUUID : 23f7dc1d-9724-406f-b48e-bdff68bb2c4f

3.0	CURRENT TRANSFORMERS		
3.1	Voltage class, insulation level and short time rating	As specified for switchgear	
3.2	Type	Cast resin, window / bar primary type	
3.3	Class of insulation	Class E or better	
3.4	Ratio	As per SLDs given in annexure - F	
3.5	Number of secondaries	As per SLDs given in annexure - F	
3.6	Accuracy class		
3.6.1	Protection core	5P20	
3.6.2	Protection (Diff. / REF)	PS	
3.6.3	Metering	0.2s	
3.6.4	Core balance CT	PS	
3.7	Burden (VA)	Adequate for the protection & instruments offered	
3.8	Excitation current of PS Class CTs	30 mA at Vk/4	
3.8	Knee Point Voltage of PS Class CTs (Vk)	>= 40 (Rct + 4)	
3.9	Primary operating current sensitivity of CBCTs	5A	
4.0	VOLTAGE TRANSFORMERS		
4.1	Type	Cast resin, draw out type, single phase units	
4.2	Rated Voltage		
4.2.1	Primary	11000/sq.rt.3	33000/sq.rt.3
4.2.2	Secondary	110V/sq.rt.3	
4.3	No. of phases	3	
4.4	No. of secondary windings	2	
4.5	Method of connection	Star/Star	
4.6	Rated voltage factor	1.2 continuous, 1.9 for 30 seconds	
4.7	Class of insulation	Class E or better	

DocUUID : 23f7dc1d-9724-406f-b48e-bdff68bb2c4f

4.8	Accuracy class		
4.8.1	Protection	3P	
4.8.2	Metering	0.2	
4.9	Primary and secondary fuses	HRC current limiting type, Primary fuse replacement shall be possible with VT in withdrawn position	
5.0	HV FUSES		
5.1	Voltage class	12kV	36kV
5.2	Rupturing capacity	50kA	
5.3	Rated current	As per application	
6.0	SURGE ARRESTORS	For 11kV switchgear	For 33kV switchgear
6.1	Rated Voltage	9kV	30kV
6.2	Maximum continuous operating voltage (MCOV)	7.65kV	25kV
6.3	Discharge current	10kA	10kA
6.4	Discharge class	3	3

Note - The auxiliary DC voltage shall be checked on a case to case basis by Purchaser

DocUUID : 23f7dc1d-9724-406f-b48e-bdff68bb2c4f

Switchgear Condition Monitoring

Thermal Monitoring

A thermal monitoring system shall be provided to detect abnormal temperatures due to faulty connections and to prevent equipment damage. The switchgear shall have temperature measurement sensors at critical points like medium voltage cable connection.

The temperature sensors installed on conductors shall:

- be installed with direct contact to hot point, to achieve accuracy of +/- 2°C
- be self-powered (no auxiliary supply, no battery)
- communicate wirelessly
- Operate from -25°C to 125 °C

The system shall allow 2 configurable thresholds (pre-alarm and alarm).
This system shall have integrated algorithms enabling to anticipate as early as possible and provide pre warning of an imminent failure/damage.

Circuit-breaker monitoring
The system shall monitor the condition of circuit-breaker to detect some abnormal behaviour, if any, and to provide ageing evaluation (% of wear).

System shall monitor:
- Opening time, Charging time
- Faults
- Ageing of mechanism (number of operation)
- Ageing of main contacts

A cloud based Condition Monitoring System, allowing predictive maintenance, shall be provided to achieve health assessment of electrical assets in substation:
- Reduction of unexpected downtime
- Reduction of fire risk
- Improvement of safety for operator and equipment
- Reduction of operational expenses (OPEX)

The system shall generate the analytics and detect abnormal conditions, well in advance before the fault occurs, to give time to Facility Manager to analyse and plan a maintenance to fix the abnormality.

The system shall be on line, 24/7/365, to immediately provide an alarm (with identification/location of the anomaly) to the operator on duty, anywhere.
A system where data is collected manually by operator on site is not acceptable.

Local investigation & monitoring inside the electrical room – Can be made optional
The switchgear shall embed a graphic HMI to help operator during local investigation and local monitoring. This HMI shall give access to the electrical monitoring data and alarms, while operator is inside the MV electrical room.

Remote control & monitoring

- Integration into Power Management software for remote control and monitoring. This monitoring will cover only the routine electrical parameters like voltage, current, breaker status and online temperature measurement but not the condition monitoring of circuit breakers.

Subscription Services:

Minimum Three years subscription to be included for the cloud based predictive IoT service. During this period, leveraging asset data on manufacturer's cloud-based platform with advanced analytics enabling condition-based maintenance; and manufacturer's expertise to provide predictive insights and reports should be ensured. This service should provide guidance and proactive support to ensure critical equipment is maintained at its optimum and enhance safety and security of site. The notification of critical events & recommendation should be transmitted by mail or phone, Smart App to ensure fastest access.

QR code:

Only by scanning this QR code, which is pasted on switchgear, the authorized person can get the access of OEM's safe repository where the below documents are uploaded, related to the switchgear supplied from works.

- Single Line Diagram
- Routine Test Certificates
- General Arrangement Drawings
- Catalogue
- Operation and Maintenance manual

This will help to access all the above required documents any time without having hard copies available.

ANNEXURE – D - GUARANTEED TECHNICAL PARTICULARS (DATA BY BIDDER)

Vendor must submit clause wise compliance in Excel sheet against specification at the time of drawing approval clearly highlighting the deviations from specification against each clause.

DocUUID : 23f7dc1d-9724-406f-b48e-bdff68bb2c4f

ANNEXURE – E – SPARES REQUIREMENT

Unit rate of all below mentioned spares have to be provided in the bid.

S No.	Description	Qty
1	Line voltage transformer	3 (1 set)
2	Bus voltage transformer	3 (1 set)
3	Current transformer of each ratio	3 (1 set)
4	Trip Coil	4
5	Closing Coil	4
6	CB Spring charging motor	2
7	Auxiliary switch	2 sets (2 Nos. each type)
8	Bursting disc / pressure relief plate complete	2
9	Numerical relay of each type	1 nos. (each type)
10	Ethernet Switch	1 No (Each Site)
11	Optical Fibre	20% of Supplied Items
12	CAT VI Ethernet cable for Communication	20% of Supplied Items
13	Vacuum Interrupter Bottle	1 set (3 nos.) of each rating
14	Breaker contacts for busbar	1 set (3 nos.) of each rating
15	Breaker testing cable with plug suitable for breaker on one side and plug suitable for the panel on the other side	3 meter(each type)
16	SCADA Spare	20% of Supplied Items

ANNEXURE – F – SLDs

DocUUID : 23f7dc1d-9724-406f-b48e-bdff68bb2c4f

ANNEXURE–F1

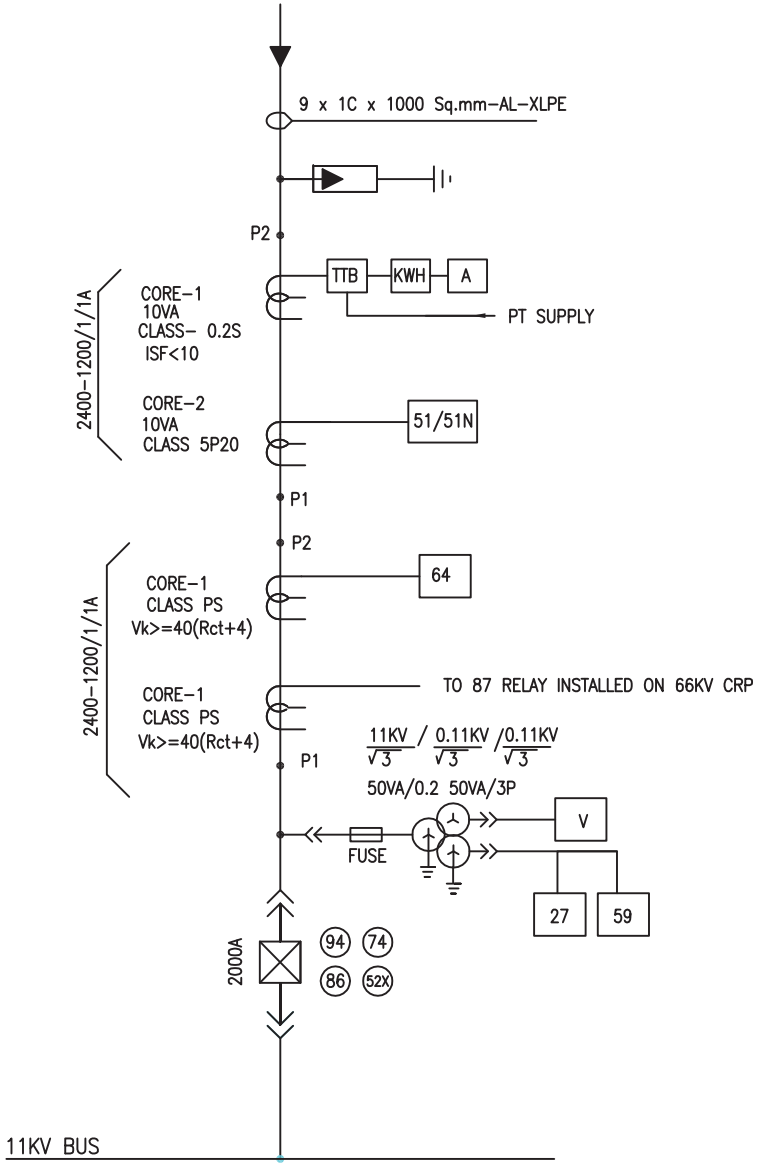

25 KA for 3 secs, 2000A at 50 degree celsius

LEGEND

SYMBOL	DESCRIPTION
	11KV SF6/VACUUM CKT. BKR. DRAWOUT TYPE
	CURRENT TRANSFORMER
	POTENTIAL TRANSFORMER
	SURGE ARRESTOR
	FUSE
52X	BREAKER AUX CONTACT MULTIPLIER
74	TRIP CIRCUIT SUPERVISION RELAY
94	ANTI PUMPING RELAY
86	HIGH SPEED TRIP RELAY
V	VOLTMETER
A	AMMETER

SYMBOL	DESCRIPTION
KWH	ENERGY METER
46	NEGATIVE PHASE SEQUENCE PROTECTION
25	SYNC CHECK
51/51N	O/C & E/F RELAY
27	UNDER VOLTAGE RELAY
87	DIFFERENTIAL RELAY
21	DISTANCE RELAY
59	OVER VOLTAGE RELAY
64	REF RELAY
67/67N	DIRECTIONAL O/C & E/F RELAY
TTB	TEST TERMINAL BLOCK

NOTE:–

1. KWH METER NOT IN SUPPLIER'S SCOPE
2. REFER CLAUSE 16 OF SPECIFICATION FOR DETAILED FUNCTIONAL REQUIREMENTS OF PROTECTION RELAYS

DRAWN	R.K/A.H H.K	TITLE:– STANDARD SLD FOR 11KV INCOMER	BSES
CHECKED	S.G/A.S		
APPD.	G.S/G.N		
DATE	29.04.22		SPECIFICATION NO. BSES–TS–66–HTSWG–R0
SCALE	NTS		SLD–SWG–11KV–01

DocUUID : 23f7dc1d-9724-406f-b48e-bdf68bb2c4f

ANNEXURE–F2

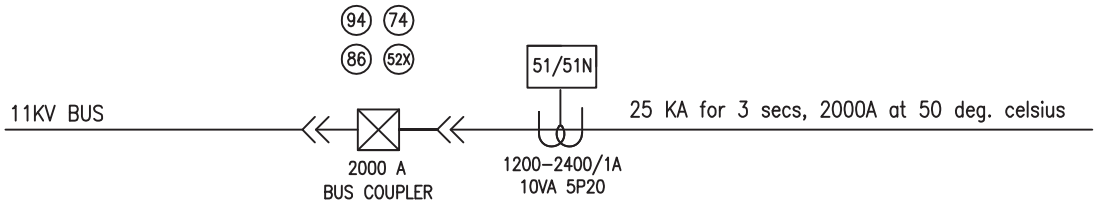

LEGEND

SYMBOL	DESCRIPTION
	11KV SF6/VACUUM CKT. BKR. DRAWOUT TYPE
	CURRENT TRANSFORMER
	POTENTIAL TRANSFORMER
	SURGE ARRESTOR
	FUSE
52X	BREAKER AUX CONTACT MULTIPLIER
74	TRIP CIRCUIT SUPERVISION RELAY
94	ANTI PUMPING RELAY
86	HIGH SPEED TRIP RELAY
V	VOLTMETER
A	AMMETER

SYMBOL	DESCRIPTION
KWH	ENERGY METER
46	NEGATIVE PHASE SEQUENCE PROTECTION
25	SYNC CHECK
51/51N	O/C & E/F RELAY
27	UNDER VOLTAGE RELAY
87	DIFFERENTIAL RELAY
21	DISTANCE RELAY
59	OVER VOLTAGE RELAY
64	REF RELAY
67/67N	DIRECTIONAL O/C & E/F RELAY
TTB	TEST TERMINAL BLOCK

NOTE:–

1. REFER CLAUSE 16 OF SPECIFICATION FOR DETAILED FUNCTIONAL REQUIREMENTS OF PROTECTION RELAYS

DRAWN	R.K/A.H H.K	TITLE:– STANDARD SLD FOR 11KV BUS SECTION	BSES
CHECKED	S.G/A.S		
APPD.	G.S/G.N		
DATE	29.04.22		
SCALE	NTS		

SPECIFICATION NO. BSES–TS–66–HTSWG–R0

SLD–SWG–11KV–02

DocUUID : 23f7dc1d-9724-406f-b48e-bdff68bb2c4f

ANNEXURE–F3

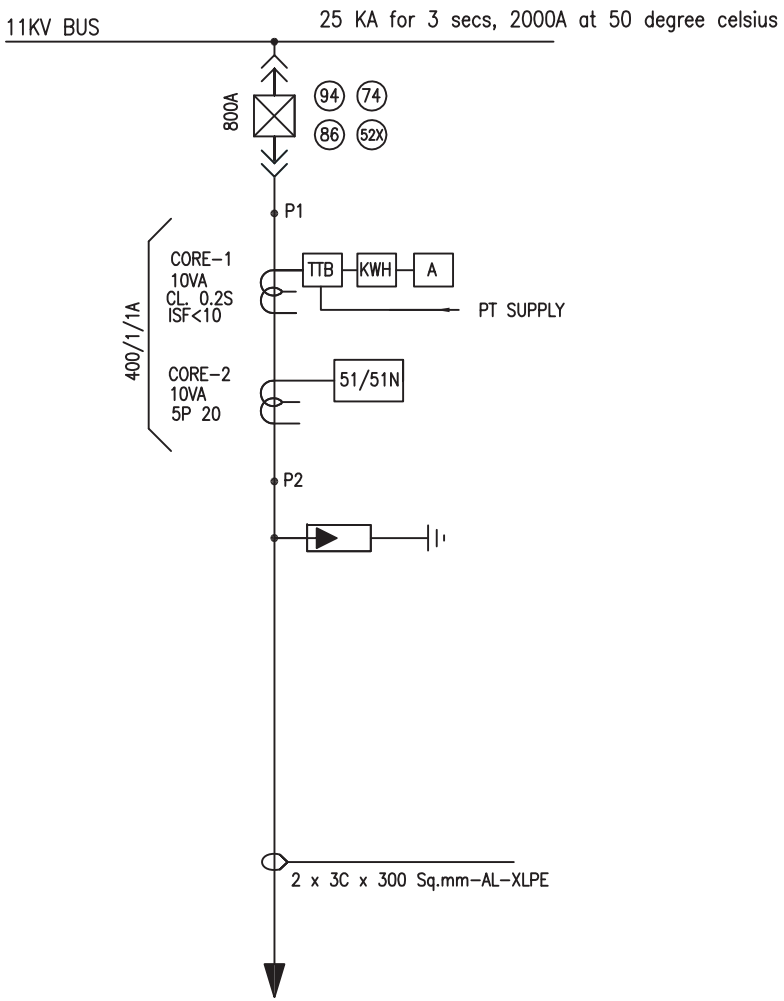

LEGEND

SYMBOL	DESCRIPTION
	11KV SF6/VACUUM CKT. BKR. DRAWOUT TYPE
	CURRENT TRANSFORMER
	POTENTIAL TRANSFORMER
	SURGE ARRESTOR
	FUSE
52X	BREAKER AUX CONTACT MULTIPLIER
74	TRIP CIRCUIT SUPERVISION RELAY
94	ANTI PUMPING RELAY
86	HIGH SPEED TRIP RELAY
V	VOLTMETER
A	AMMETER

SYMBOL	DESCRIPTION
KWH	ENERGY METER
46	NEGATIVE PHASE SEQUENCE PROTECTION
25	SYNC CHECK
51/51N	O/C & E/F RELAY
27	UNDER VOLTAGE RELAY
87	DIFFERENTIAL RELAY
21	DISTANCE RELAY
59	OVER VOLTAGE RELAY
64	REF RELAY
67/67N	DIRECTIONAL O/C & E/F RELAY
TTB	TEST TERMINAL BLOCK

NOTE:–

1. KWH METER NOT IN SUPPLIER'S SCOPE
2. REFER CLAUSE 16 OF SPECIFICATION FOR DETAILED FUNCTIONAL REQUIREMENTS OF PROTECTION RELAYS

DRAWN	R.K/A.H H.K	TITLE:– STANDARD SLD FOR 11KV OUTGOING FEEDER	BSES
CHECKED	S.G/A.S		
APPD.	G.S/G.N		
DATE	29.04.22		SPECIFICATION NO. BSES–TS–66–HTSWG–R0
SCALE	NTS		SLD–SWG–11KV–03

DocUUID : 23f7dc1d-9724-406f-b48e-bdf68bb2c4f

ANNEXURE–F4

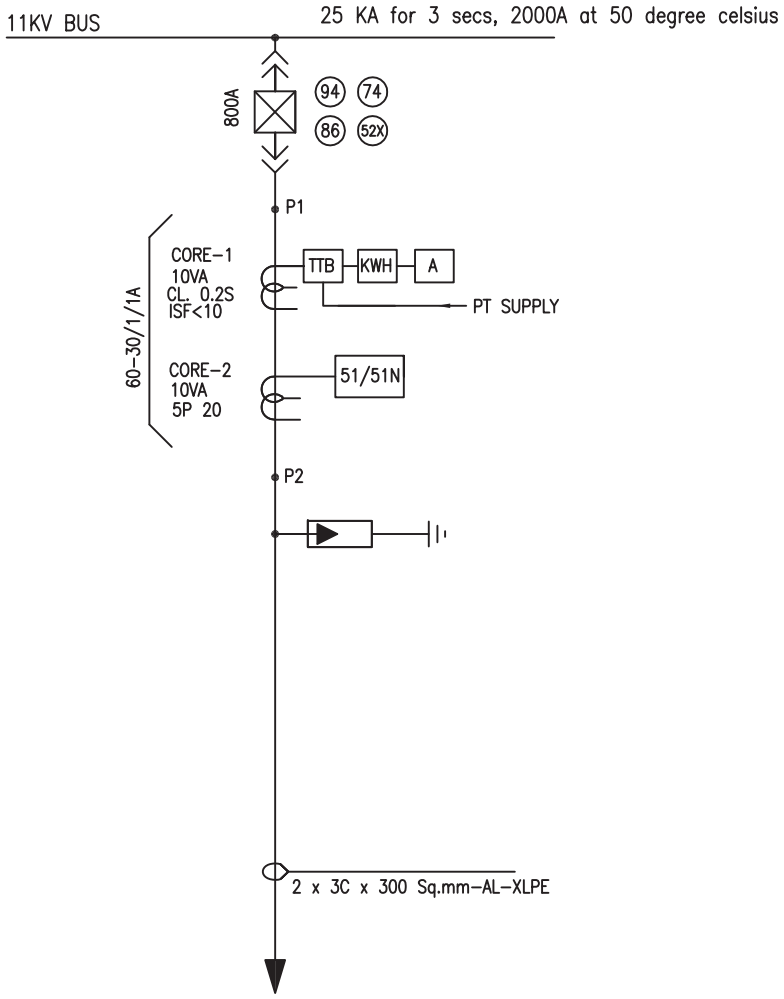

LEGEND

SYMBOL	DESCRIPTION
	11KV SF6/VACUUM CKT. BKR. DRAWOUT TYPE
	CURRENT TRANSFORMER
	POTENTIAL TRANSFORMER
	SURGE ARRESTOR
	FUSE
52X	BREAKER AUX CONTACT MULTIPLIER
74	TRIP CIRCUIT SUPERVISION RELAY
94	ANTI PUMPING RELAY
86	HIGH SPEED TRIP RELAY
V	VOLTMETER
A	AMMETER

SYMBOL	DESCRIPTION
KWH	ENERGY METER
46	NEGATIVE PHASE SEQUENCE PROTECTION
25	SYNC CHECK
51/51N	O/C & E/F RELAY
27	UNDER VOLTAGE RELAY
87	DIFFERENTIAL RELAY
21	DISTANCE RELAY
59	OVER VOLTAGE RELAY
64	REF RELAY
67/67N	DIRECTIONAL O/C & E/F RELAY
TTB	TEST TERMINAL BLOCK

NOTE:–

1. KWH METER NOT IN SUPPLIER'S SCOPE
2. REFER CLAUSE 16 OF SPECIFICATION FOR DETAILED FUNCTIONAL REQUIREMENTS OF PROTECTION RELAYS

DRAWN	R.K/A.H H.K	TITLE:– STANDARD SLD FOR 11KV STATION TRANSFORMER FEEDER	BSES
CHECKED	S.G/A.S		
APPD.	G.S/G.N		
DATE	29.04.22		SPECIFICATION NO. BSES–TS–66–HTSWG–R0
SCALE	NTS		SLD–SWG–11KV–04

DocUUID : 23f7dc1d-9724-406f-b48e-bdf66bb2c4f

ANNEXURE–F5

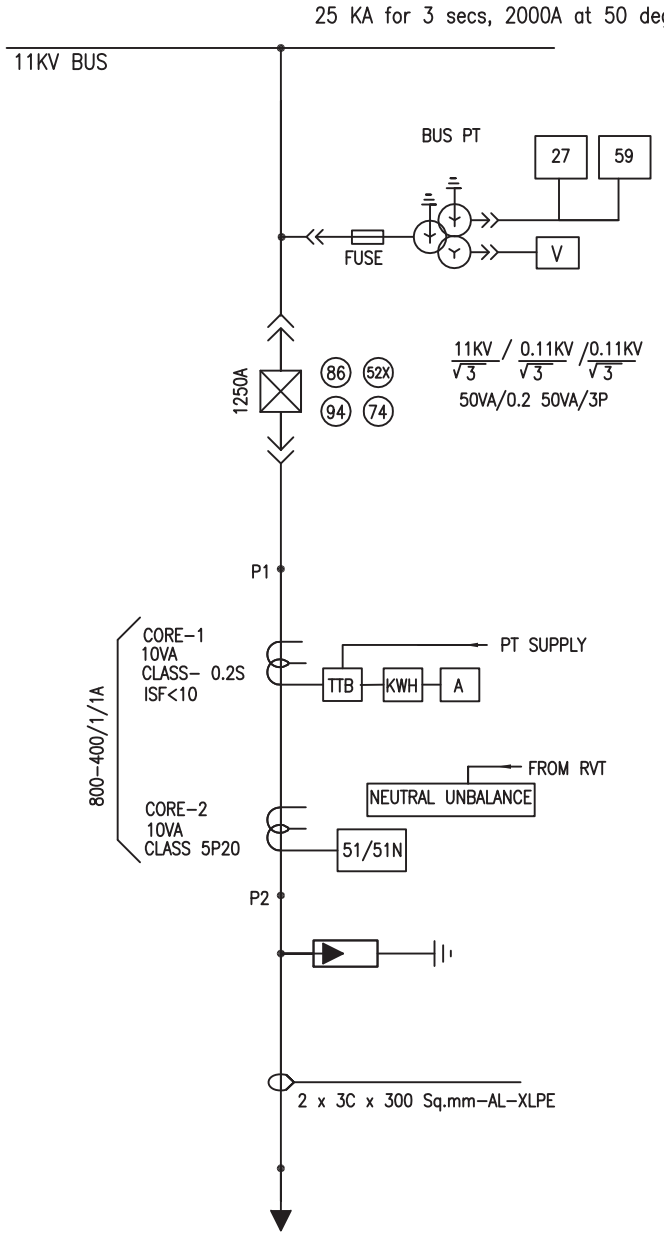

LEGEND

SYMBOL	DESCRIPTION
	11KV SF6/VACUUM CKT. BKR. DRAWOUT TYPE
	CURRENT TRANSFORMER
	POTENTIAL TRANSFORMER
	SURGE ARRESTOR
	FUSE
52X	BREAKER AUX CONTACT MULTIPLIER
74	TRIP CIRCUIT SUPERVISION RELAY
94	ANTI PUMPING RELAY
86	HIGH SPEED TRIP RELAY
V	VOLTMETER
A	AMMETER

SYMBOL	DESCRIPTION
KWH	ENERGY METER
25	SYNC CHECK
51/51N	O/C & E/F RELAY
27	UNDER VOLTAGE RELAY
87	DIFFERENTIAL RELAY
21	DISTANCE RELAY
59	OVER VOLTAGE RELAY
64	REF RELAY
67/67N	DIRECTIONAL O/C & E/F RELAY
TTB	TEST TERMINAL BLOCK

NOTE:–

1. KWH METER NOT IN SUPPLIER'S SCOPE
2. REFER CLAUSE 16 OF SPECIFICATION FOR DETAILED FUNCTIONAL REQUIREMENTS OF PROTECTION RELAYS
3. ONE BPT TO BE CONSIDERED FOR EACH CAPACITOR PANEL

DRAWN	R.K/A.H H.K	TITLE:– STANDARD SLD FOR 11KV CAPACITOR FEEDER	BSES
CHECKED	S.G/A.S		SPECIFICATION NO. BSES–TS–66–HTSWG–R0
APPD.	G.S/G.N		SLD–SWG–11KV–05
DATE	29.04.22		
SCALE	NTS		

DocUUID : 23f7dc1d-9724-406f-b48e-bdf6bbb2c4f

ANNEXURE–F6

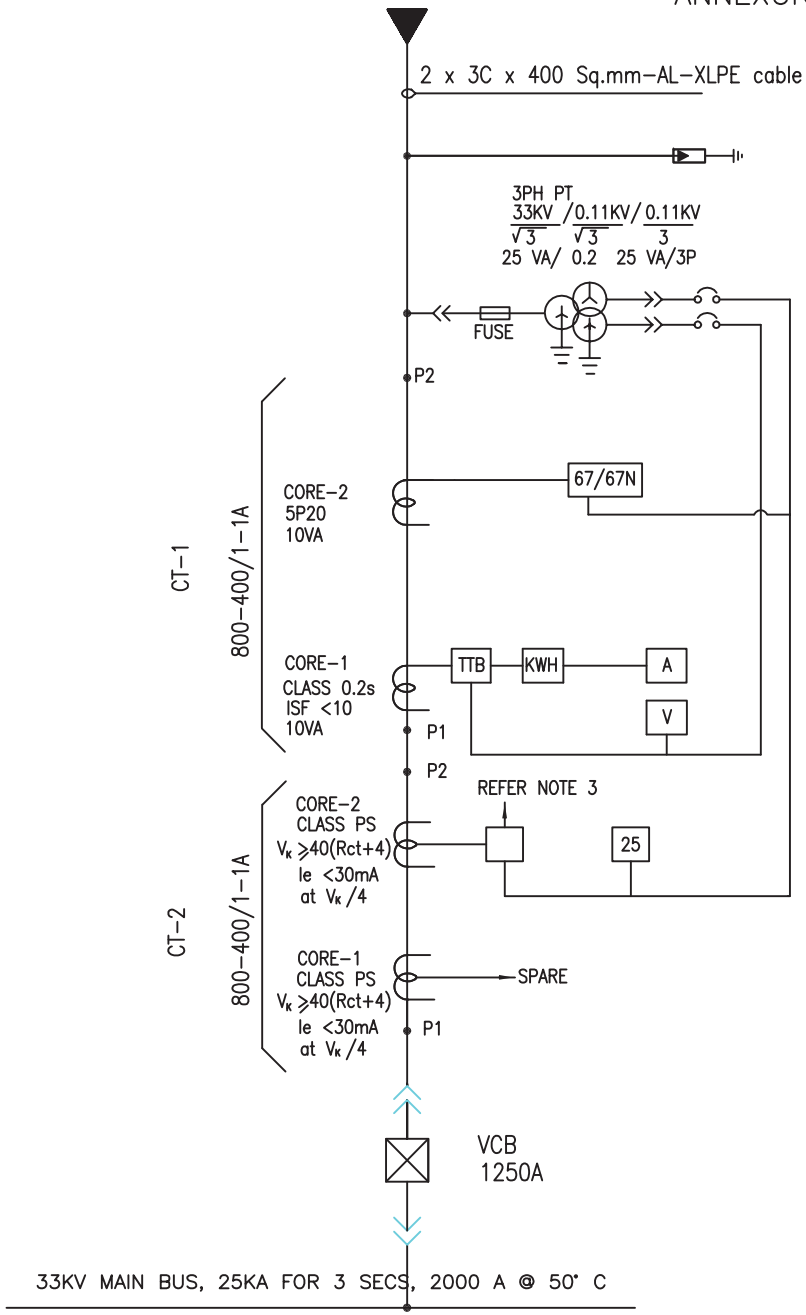

LEGEND

SYMBOL	DESCRIPTION
	11KV SF6/VACUUM CKT. BKR. DRAWOUT TYPE
	CURRENT TRANSFORMER
	POTENTIAL TRANSFORMER
	SURGE ARRESTOR
	FUSE
52X	BREAKER AUX CONTACT MULTIPLIER
74	TRIP CIRCUIT SUPERVISION RELAY
94	ANTI PUMPING RELAY
86	HIGH SPEED TRIP RELAY
V	VOLTMETER
A	AMMETER

SYMBOL	DESCRIPTION
KWH	ENERGY METER
46	NEGATIVE PHASE SEQUENCE PROTECTION
25	SYNC CHECK
51/51N	O/C & E/F RELAY
27	UNDER VOLTAGE RELAY
87	DIFFERENTIAL RELAY
21	DISTANCE RELAY
59	OVER VOLTAGE RELAY
64	REF RELAY
67/67N	DIRECTIONAL O/C & E/F RELAY
TTB	TEST TERMINAL BLOCK

NOTE:
1. KWH METER NOT IN SUPPLIER'S SCOPE
2. REFER CLAUSE 16 OF SPECIFICATION FOR DETAILED FUNCTIONAL REQUIREMENTS OF PROTECTION RELAYS
3. LINE DIFFERENTIAL OR DISTANCE RELAY. REFER CLAUSE 16.7.1 OF SPECIFICATION

DRAWN	R.K/A.H H.K	TITLE TYPICAL SLD FOR 33KV INCOMER	BSES
CHECKED	S.G/A.S		SPECIFICATION NO. BSES-TS-66-HTSWG-R0
APPD.	G.S/G.N		SLD-SWG-33KV-01
DATE	29.04.22		
SCALE	NTS		

DocUUID : 23f7dc1d-9724-406f-b48e-bdf66bb2c4f

ANNEXURE–F7

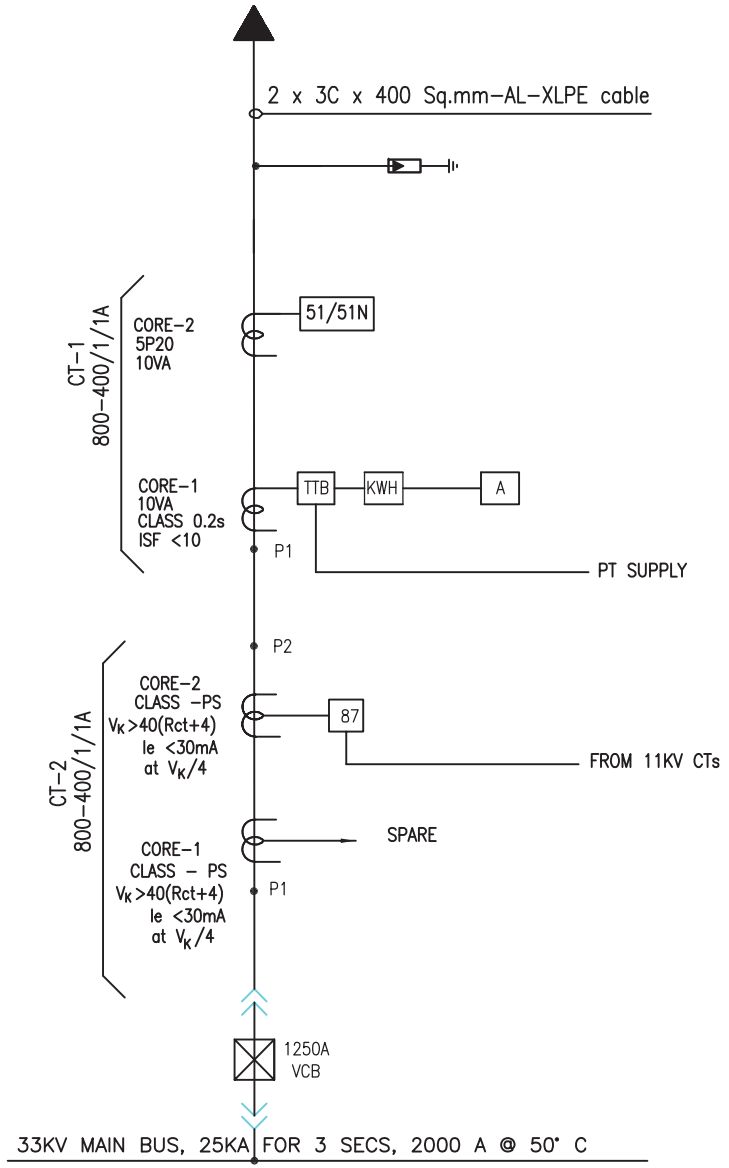

LEGEND

SYMBOL	DESCRIPTION
	11KV SF6/VACUUM CKT. BKR. DRAWOUT TYPE
	CURRENT TRANSFORMER
	POTENTIAL TRANSFORMER
	SURGE ARRESTOR
	FUSE
52X	BREAKER AUX CONTACT MULTIPLIER
74	TRIP CIRCUIT SUPERVISION RELAY
94	ANTI PUMPING RELAY
86	HIGH SPEED TRIP RELAY
V	VOLTMETER
A	AMMETER

SYMBOL	DESCRIPTION
KWH	ENERGY METER
46	NEGATIVE PHASE SEQUENCE PROTECTION
25	SYNC CHECK
51/51N	O/C & E/F RELAY
27	UNDER VOLTAGE RELAY
87	DIFFERENTIAL RELAY
21	DISTANCE RELAY
59	OVER VOLTAGE RELAY
64	REF RELAY
67/67N	DIRECTIONAL O/C & E/F RELAY
TTB	TEST TERMINAL BLOCK

NOTE:
1. KWH METER NOT IN SUPPLIER'S SCOPE
2. REFER CLAUSE 16 OF SPECIFICATION FOR DETAILED FUNCTIONAL REQUIREMENTS OF PROTECTION RELAYS

DRAWN	R.K/A.H H.K	TITLE TYPICAL SLD FOR 33/11KV TRANSFORMER FEEDER	BSES
CHECKED	S.G/A.S		SPECIFICATION NO. BSES-TS-66-HTSWG-R0
APPD.	G.S/G.N		
DATE	29.04.22		SLD-SWG-33KV-02
SCALE	NTS		

DocUUID : 23f7dc1d-9724-406f-b48e-bdff68bb2c4f

ANNEXURE–F8

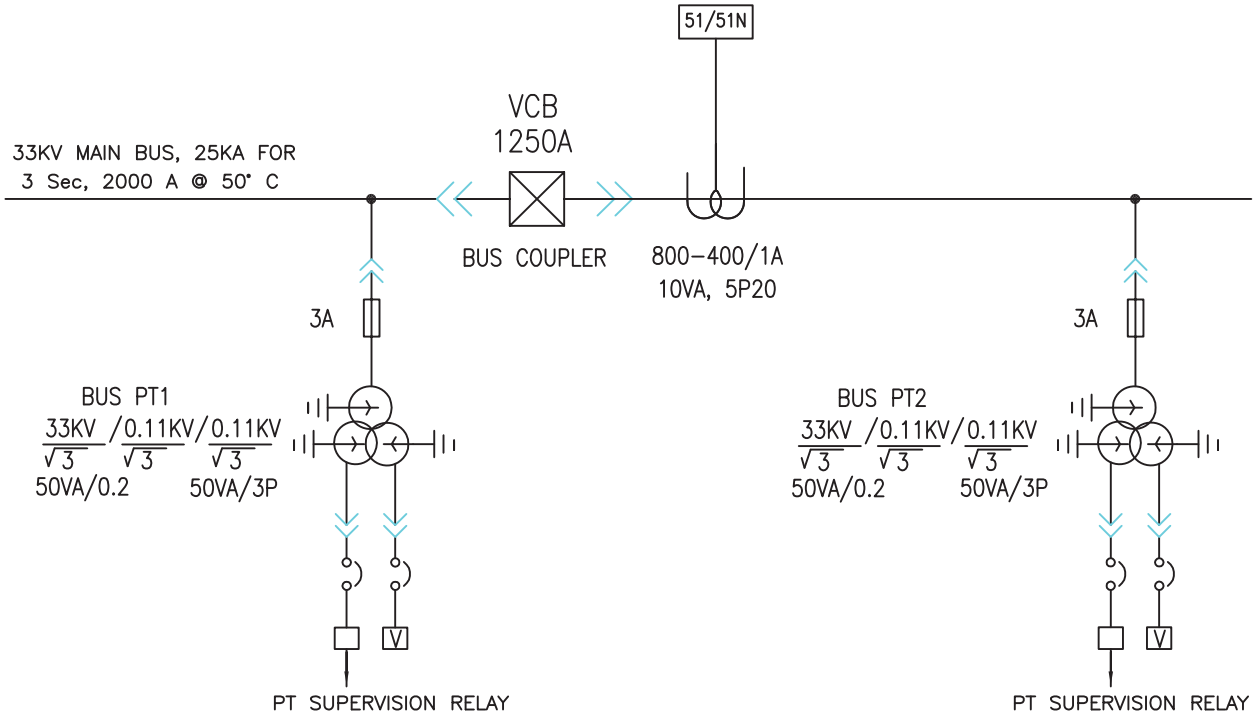

LEGEND

SYMBOL	DESCRIPTION
	11KV SF6/VACUUM CKT. BKR. DRAWOUT TYPE
	CURRENT TRANSFORMER
	POTENTIAL TRANSFORMER
	SURGE ARRESTOR
	FUSE
52X	BREAKER AUX CONTACT MULTIPLIER
74	TRIP CIRCUIT SUPERVISION RELAY
94	ANTI PUMPING RELAY
86	HIGH SPEED TRIP RELAY
V	VOLTMETER
A	AMMETER

SYMBOL	DESCRIPTION
KWH	ENERGY METER
46	NEGATIVE PHASE SEQUENCE PROTECTION
25	SYNC CHECK
51/51N	O/C & E/F RELAY
27	UNDER VOLTAGE RELAY
87	DIFFERENTIAL RELAY
21	DISTANCE RELAY
59	OVER VOLTAGE RELAY
64	REF RELAY
67/67N	DIRECTIONAL O/C & E/F RELAY
TTB	TEST TERMINAL BLOCK

NOTE:–

1. REFER CLAUSE 16 OF SPECIFICATION FOR DETAILED FUNCTIONAL REQUIREMENTS OF PROTECTION RELAYS

DRAWN	R.K/A.H H.K	TITLE	BSES
CHECKED	S.G/A.S	TYPICAL SLD FOR 33KV BUS COUPLER CUM BUS PT	SPECIFICATION NO. BSES-TS-66-HTSWG-R0
APPD.	G.S/G.N		SLD-SWG-33KV-03
DATE	29.04.22		
SCALE	NTS		

DocUUID : 23f7dc1d-9724-406f-b48e-bdff68bb2c4f

ANNEXURE–F9

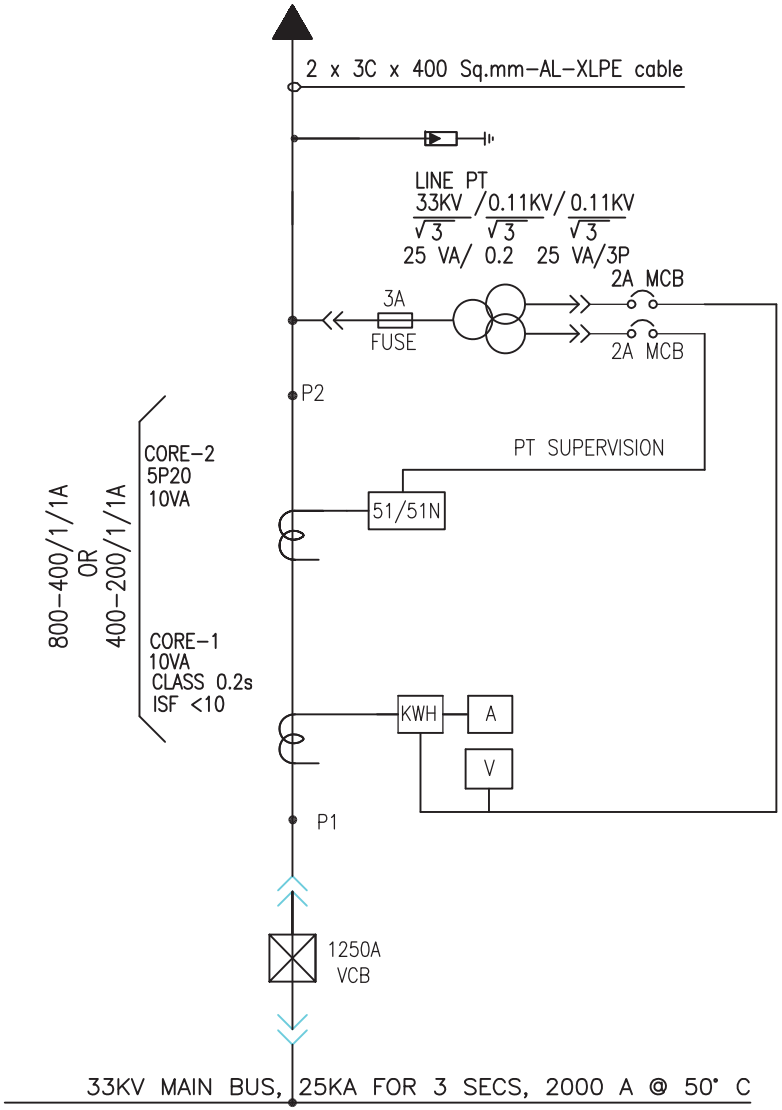

LEGEND

SYMBOL	DESCRIPTION
	11KV SF6/VACUUM CKT. BKR. DRAWOUT TYPE
	CURRENT TRANSFORMER
	POTENTIAL TRANSFORMER
	SURGE ARRESTOR
	FUSE
52X	BREAKER AUX CONTACT MULTIPLIER
74	TRIP CIRCUIT SUPERVISION RELAY
94	ANTI PUMPING RELAY
86	HIGH SPEED TRIP RELAY
V	VOLTMETER
A	AMMETER

SYMBOL	DESCRIPTION
KWH	ENERGY METER
46	NEGATIVE PHASE SEQUENCE PROTECTION
25	SYNC CHECK
51/51N	O/C & E/F RELAY
27	UNDER VOLTAGE RELAY
87	DIFFERENTIAL RELAY
21	DISTANCE RELAY
59	OVER VOLTAGE RELAY
64	REF RELAY
67/67N	DIRECTIONAL O/C & E/F RELAY
TTB	TEST TERMINAL BLOCK

NOTE:
1. KWH METER NOT IN SUPPLIER'S SCOPE
2. REFER CLAUSE 16 OF SPECIFICATION FOR DETAILED FUNCTIONAL REQUIREMENTS OF PROTECTION RELAYS
3. TTB NOT REQUIRED IN THIS PANEL

DRAWN	R.K/A.H H.K
CHECKED	S.G/A.S
APPD.	G.S/G.N
DATE	29.04.22
SCALE	NTS

TITLE

TYPICAL SLD FOR 33 KV OUTGOING FEEDER (FOR INSTALLATION AT KCC CONSUMERS PREMISES)

BSES

SPECIFICATION NO. BSES-TS-66-HTSWG-R0

SLD-SWG-33KV-04

DocUUID : 23f7dc1d-9724-406f-b48e-bdff68bb2c4f

ANNEXURE–F10

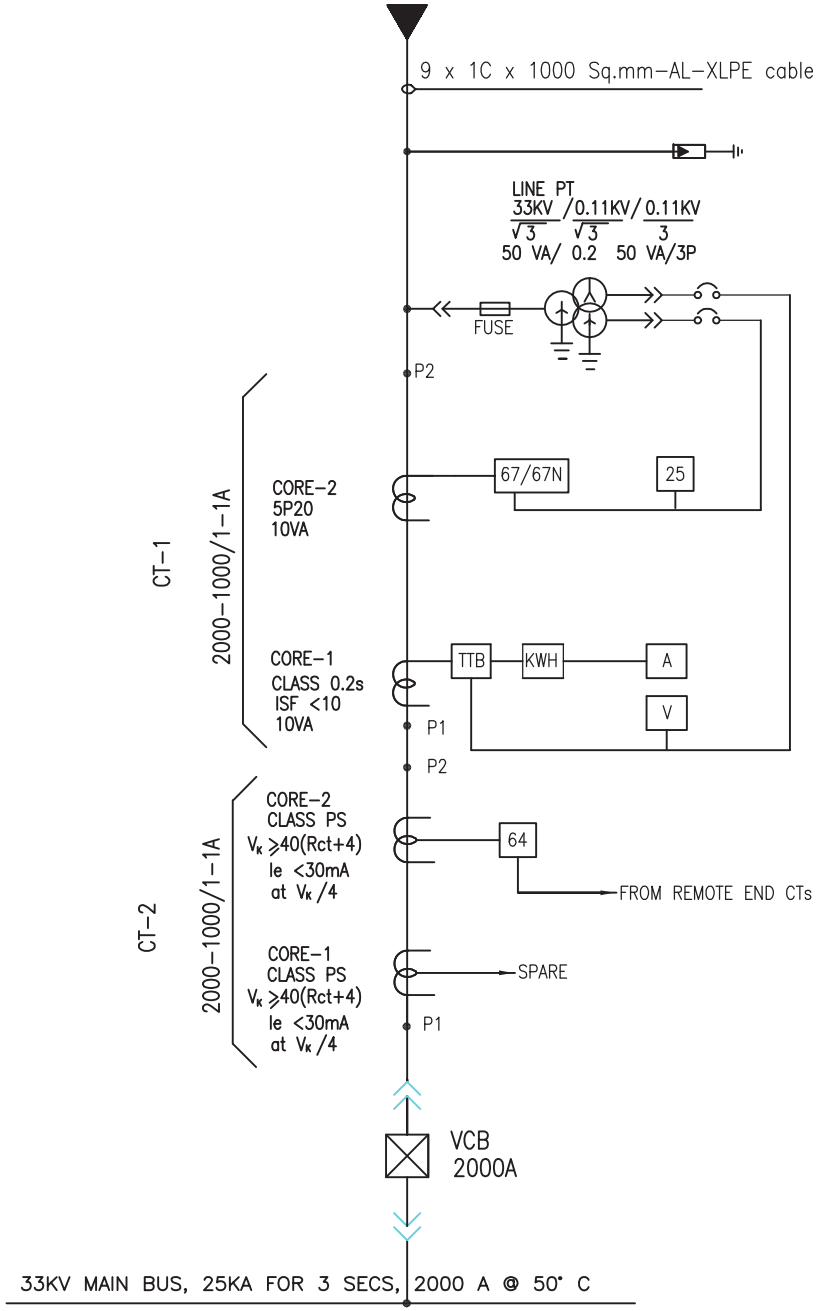

LEGEND

SYMBOL	DESCRIPTION
	11KV SF6/VACUUM CKT. BKR. DRAWOUT TYPE
	CURRENT TRANSFORMER
	POTENTIAL TRANSFORMER
	SURGE ARRESTOR
	FUSE
52X	BREAKER AUX CONTACT MULTIPLIER
74	TRIP CIRCUIT SUPERVISION RELAY
94	ANTI PUMPING RELAY
86	HIGH SPEED TRIP RELAY
V	VOLTMETER
A	AMMETER

SYMBOL	DESCRIPTION
KWH	ENERGY METER
46	NEGATIVE PHASE SEQUENCE PROTECTION
25	SYNC CHECK
51/51N	O/C & E/F RELAY
27	UNDER VOLTAGE RELAY
87	DIFFERENTIAL RELAY
21	DISTANCE RELAY
59	OVER VOLTAGE RELAY
64	REF RELAY
67/67N	DIRECTIONAL O/C & E/F RELAY
TTB	TEST TERMINAL BLOCK

NOTE: 1. KWH METER NOT IN SUPPLIER'S SCOPE
2. REFER CLAUSE 16 OF SPECIFICATION FOR DETAILED FUNCTIONAL REQUIREMENTS OF PROTECTION RELAYS

DRAWN	R.K/A.H H.K	TITLE: TYPICAL SLD FOR 33KV INCOMER FROM 66/33KV AUTO TRANSFORMER	BSES
CHECKED	S.G/A.S		SPECIFICATION NO. BSES-TS-66-HTSWG-R0
APPD.	G.S/G.N		SLD-SWG-33KV-05
DATE	29.04.22		
SCALE	NTS		

DocUUID : 23f7dc1d-9724-406f-b48e-bdff68bb2c4f

ANNEXURE–F11

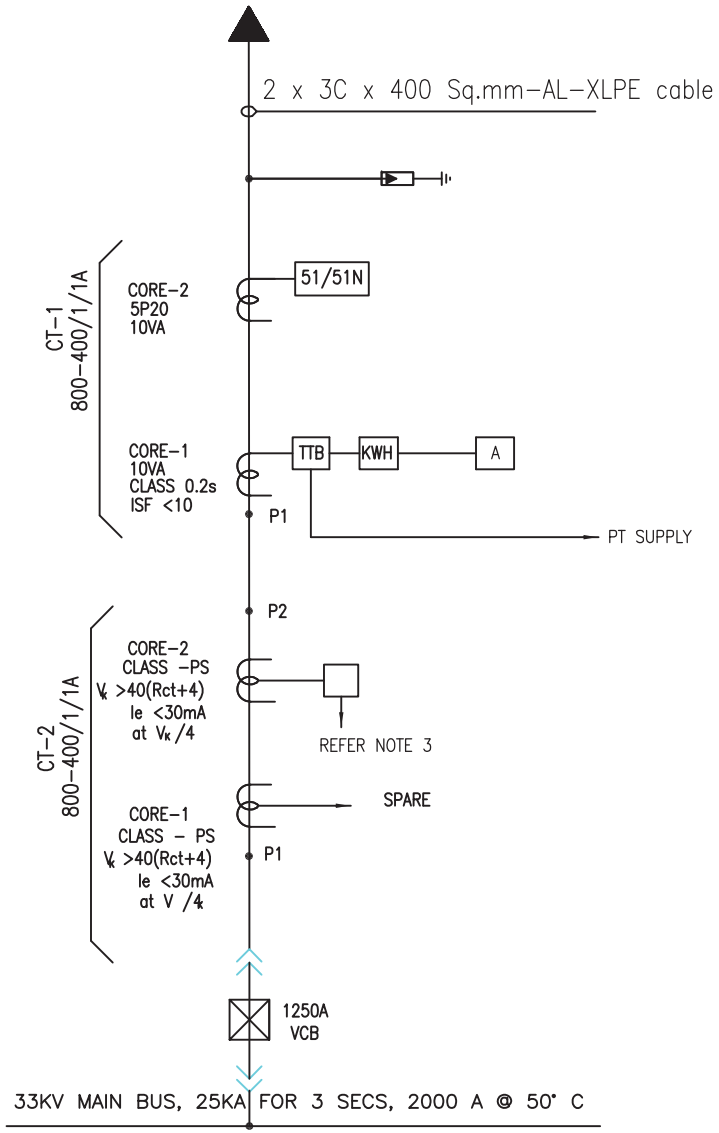

LEGEND

SYMBOL	DESCRIPTION
	11KV SF6/VACUUM CKT. BKR. DRAWOUT TYPE
	CURRENT TRANSFORMER
	POTENTIAL TRANSFORMER
	SURGE ARRESTOR
	FUSE
52X	BREAKER AUX CONTACT MULTIPLIER
74	TRIP CIRCUIT SUPERVISION RELAY
94	ANTI PUMPING RELAY
86	HIGH SPEED TRIP RELAY
V	VOLTMETER
A	AMMETER

SYMBOL	DESCRIPTION
KWH	ENERGY METER
46	NEGATIVE PHASE SEQUENCE PROTECTION
25	SYNC CHECK
51/51N	O/C & E/F RELAY
27	UNDER VOLTAGE RELAY
87	DIFFERENTIAL RELAY
21	DISTANCE RELAY
59	OVER VOLTAGE RELAY
64	REF RELAY
67/67N	DIRECTIONAL O/C & E/F RELAY
TTB	TEST TERMINAL BLOCK

NOTE:
1. KWH METER NOT IN SUPPLIER'S SCOPE
2. REFER CLAUSE 16 OF SPECIFICATION FOR DETAILED FUNCTIONAL REQUIREMENTS OF PROTECTION RELAYS
3. LINE DIFFERENTIAL OR DISTANCE RELAY. REFER CLAUSE 16.12.1 OF SPECIFICATION

DRAWN	R.K/A.H H.K
CHECKED	S.G/A.S
APPD.	G.S/G.N
DATE	29.04.22
SCALE	NTS

TITLE
TYPICAL SLD FOR 33KV OUTGOING FROM 66/33KV AUTO TRANSFORMER

BSES

SPECIFICATION NO. BSES-TS-66-HTSWG-R0

SLD-SWG-33KV-06

DocUUID : 23f7dc1d-9724-406f-b48e-bdff68bb2c4f

ANNEXURE–F12

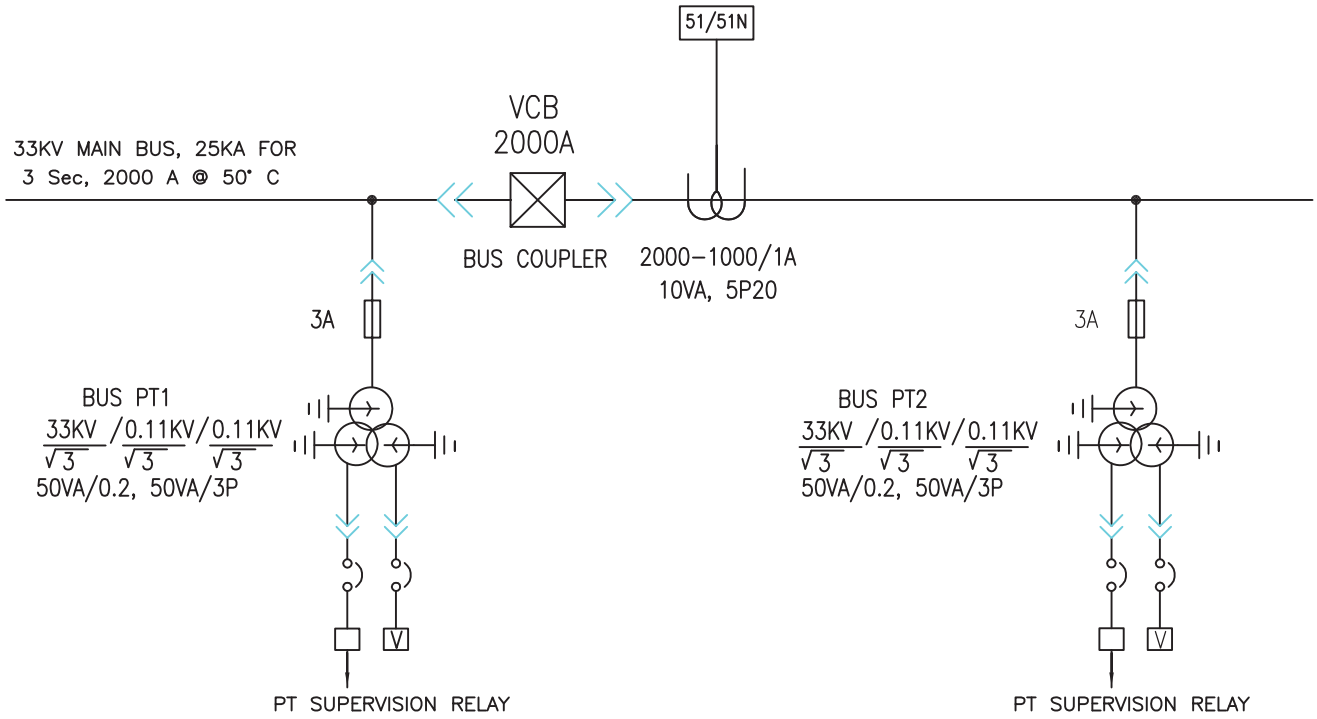

LEGEND

SYMBOL	DESCRIPTION
	11KV SF6/VACUUM CKT. BKR. DRAWOUT TYPE
	CURRENT TRANSFORMER
	POTENTIAL TRANSFORMER
	SURGE ARRESTOR
	FUSE
52X	BREAKER AUX CONTACT MULTIPLIER
74	TRIP CIRCUIT SUPERVISION RELAY
94	ANTI PUMPING RELAY
86	HIGH SPEED TRIP RELAY
V	VOLTMETER
A	AMMETER

SYMBOL	DESCRIPTION
KWH	ENERGY METER
46	NEGATIVE PHASE SEQUENCE PROTECTION
25	SYNC CHECK
51/51N	O/C & E/F RELAY
27	UNDER VOLTAGE RELAY
87	DIFFERENTIAL RELAY
21	DISTANCE RELAY
59	OVER VOLTAGE RELAY
64	REF RELAY
67/67N	DIRECTIONAL O/C & E/F RELAY
TTB	TEST TERMINAL BLOCK

NOTE:–

1. REFER CLAUSE 16 OF SPECIFICATION FOR DETAILED FUNCTIONAL REQUIREMENTS OF PROTECTION RELAYS

DRAWN	R.K/A.H H.K
CHECKED	S.G/A.S
APPD.	G.S/G.N
DATE	29.04.22
SCALE	NTS

TITLE

TYPICAL SLD FOR BUS COUPLER CUM BUS PT PANEL FOR 33KV SWITCH BOARD OF 66/33KV AUTO TRANSFORMER

BSES

SPECIFICATION NO. BSES-TS-66-HTSWG-R0

SLD-SWG-33KV-07

DocUUID : 23f7dc1d-9724-406f-b48e-bdff68bb2c4f

BSES Rajdhani Power Limited
BSES Bhawan, Nehru Place, New Delhi- 19

TECHNICAL SPECIFICATION

FOR

CABLE INSTALLATION & ACCESSORIES

Prepared by	Sonia Mittal	Mittal	Rev: 1
Reviewed by	Uttam Shukla	Shukla	Date: 19th Nov., 2025
Approved by	Deepti Sharma	Deepti	

Technical Specification for Cable Installation and Accessories

1.0 INSTALLATION OF CABLES:

1.1 The cable shall be laid as per IS 1255. The Contractor shall prepare cable schedules for all the cable circuits associated with the equipment in the substation showing length, size and routing of each cable which shall be given suitable code numbers and submit the same for Owner's/Engineer's information/approval. Cable and Conduit/Pipes laying shall be done strictly in accordance with the cable schedules.

1.2 The control and power cables shall be laid in Conduits/Pipes, concrete pipes, ducts, trays or cable trenches unless indicated otherwise. The power and control cables shall be laid in different trays. Cables shall be cleated to the cable tray after properly dressing.

1.3 Ducts shall be provided wherever cable trenches cross roads with provision of one spare duct for future use.

1.4 All civil works, viz, excavations, sand cover, providing brick cover on directly laid cables, construction of foundations, trenches with cable tray supports, cable ducts under roads, back filling, finishing associated with cabling work shall be duly completed.

1.5 The Contractor shall supply and install all the surface mounted/ embedded rigid and flexible conduits, their connections, and associated clamps, bushings, lock-nuts, caps etc required in the cabling work.

1.6 All Conduit/Pipes and their accessories shall be made of galvanized heavy gauge steel as per BIS Specification. The internal bore of all pipes shall be smooth and suitable for pulling PVC sheathed cables without damage.

1.7 The Contractor shall supply all fittings including ordinary tees and elbows, check nuts, male and female fittings pull boxes, junction boxes, conduit outlets, outlet boxes, splice boxes, terminal boxes, gaskets and box covers, saddles and all supporting steel work and all such arrangements which are required to complete the conduit installations.

1.8 Pre-fabricated junction boxes, conduit boxes and conduits shall be shop fabricated out of malleable iron or steel plates and shall be galvanized and provided with galvanized malleable iron or steel plate covers and rubber gaskets

1.9 All the apparatus, connections and cable work shall be designed and arranged to eliminate the risk of fire and minimize damage which might be caused in the event of fire. Wherever cables pass through floor or wall openings or other partitions, suitable bushes of approved type shall be supplied and put in position by the Contractor.

1.10 Standard cable grips, reels and rollers shall be utilized for cable pulling.

1.11 Each cable, whether power or control, shall be provided with a metallic or plastic tag of an approved type, bearing cable reference number indicated in the cable schedule prepared by the Contractor, at every 10 meter run and at both ends of the cable, adjacent to the

terminations as well as where cables enter or leave ducts. Cable routing shall be so done that cables are accessible for identification and maintenance easily, and are arranged neatly.

1.12 In no case the cables shall be bent sharply or kinked with the radius of bending falling below 15D where D is the overall diameter of the cable.

1.13 When power cables are laid in the proximity of communication cables, the minimum horizontal and vertical separation between power and communication cables shall be 600 mm. Wherever possible the power and communication cables shall be located as far from each other as possible. The power and communication cables shall cross each other at right angles.

1.14 Wherever cables cross roads, water, oil, sewage or steam-lines, special care shall be taken while designing the trenches/ducts for protection of the cables.

1.15 In each cable run, some extra length shall be provided at a suitable location to enable making of one or two straight-through joints for carrying out repairs if the cable develops fault at a later date.

1.16 Cable splices shall not be permitted except where called for as per the construction drawings, or where permitted by the Engineer. Straight-through joints in the run of cables wherever unavoidable shall be through joint-boxes.

1.17 The termination of cables at various equipments shall be carefully made in accordance with the manufacturer's instructions and detailed connection diagrams.

Termination materials for all cables shall match with the type of cable insulation and have thermal and electrical ratings and chemical properties similar to those of the associated cable.
All terminating materials except for those already supplied with the electrical equipment shall be provided by the Contractor.

1.18 Control cable terminations shall be made in accordance with the color code marked wiring diagrams of control circuits. Multi-conductor control cable jackets shall be removed as required to train and terminate the conductors. The cable jacket shall be left on the cable, to the extent possible. The insulated conductors from which the jacket is removed shall be neatly trained in bundles and terminated. The bundles shall be firmly, but not tightly, tied utilizing plastic or nylon ties or specially treated fungus-proof cord.

1.19 The connectors for control cables shall preferably terminate in Ross Courteny terminals and washers and be covered with transparent insulating sleeves so as to prevent accidental contact with ground or adjacent terminals. The insulating sleeves shall be fire resistant and shall be long enough to overlap the conductor insulation.

1.20 When control cables are to be fanned out and tied together with cord, the Contractor shall make connections to terminal blocks and test the equipment for proper operation before tying the cables together with cord.

1.21 Jointing of cables shall be made in accordance with the applicable Bureau of Indian Standards Code of practice, Owners approval and manufacturer's special instructions. The materials and tools required for cable jointing work shall be in the Contractor's scope.

1.22 The supply of joint boxes shall include all hardware fittings, compounds, tapes and other materials required for making the joints.

Special tools, clips and saddles, glands, seals, PVC sealing compound, locknut, etc, required for connection and termination of cables shall be in the Contractor's scope.

1.23 All cables shall be megger-tested before jointing. After jointing is completed all L.V cables shall be megger-tested.

Cable cores shall be tested for:

i. Continuity.
ii. Absence of cross phasing
iii. Insulation resistance to earth.
iv. Insulation resistance between conductors.

2.0 CABLE TRAYS, ACCESSORIES & TRAY SUPPORTS, CONDUITS, PIPES AND DUCTS

2.1 Cable trays shall be run either in concrete cable trench or overhead supported from building steel. The cable trays shall be ladder type for power cable and perforated type for Control cable. The trays shall be supplied with matching fittings and accessories.

2.2 Cable tray shall be fabricated out of rolled mild steel sheets free from flaws such as laminations, rolling marks, pitting etc. Minimum thickness of cable trays shall be 2.0mm.

2.3 Cables shall be clamped to the cable trays in the horizontal runs with 18 gauge GI wires. For vertical runs the cables shall be clamped with suitable site-fabricated clamps.

2.4 All cable trays including perforated sheet trays, weld mesh trays, vertical raceways shall be hot-dip galvanized and epoxy coated. The trays shall be of standard width of 150mm, 300mm, 450mm & 600mm and standard length of 2.5M. Trays upto 300mm shall be perforated type and above 300 mm shall be ladder type.

2.5 The conductors carrying AC and DC supplies shall not be bunched together in a conduit. Where single-core cables are individually drawn into separate pipes, HDPE pipes shall be used.

Technical Specification for Cable Installation and Accessories

2.6 Flexible metallic conduits shall be used for termination of connections to equipment to be disconnected at periodic intervals and also for termination of connections to level switches, limit switches, pressure switches etc.

2.7 In order to minimize condensation or sweating inside the conduit, all outlets of the conduit system shall be properly drained and ventilated so to prevent entry of insects and water as far as possible.

2.8 The conduits or pipes shall be run along walls, floor and ceilings, on steel supports, embedded in soil, floor, wall or foundation, in accordance with the relevant layout drawings, approved by the Owner.

2.9 All fittings in the conduit systems having threaded connections shall be tightened with full thread engagement and with a minimum of wrench work in order to avoid wrench outs.

2.10 Embedded conduits running parallel to a masonry surface shall, wherever possible, have a cover of at least 38 mm.

2.11 The conduits shall be lead into terminal boxes through the entry points provided by the equipment manufacturers unless otherwise shown in the drawings or unless otherwise directed by the Engineer.

2.12 While installing asbestos pipe or other fiber conduit, cracked pieces shall not be used. The sections cracked or broken during or after placement shall be replaced.

2.13 For underground conduit runs the Contractor shall excavate and backfill as necessary.

2.14 Exposed conduit shall be adequately supported by racks and clamps or straps or by other approved means.

2.15 Where conduits are stubbed out of masonry for future extension outside the structure, they shall be specially protected against corrosion and shall be boxed in against possible physical damage.

2.16 Each conduit run shall be marked with its designation as indicated on the drawings - 'Identification'.

2.17 Where conduit and boxes in locations of severe exposure require, painting of galvanized surfaces with Alkyd Resin Zinc Dust paint following by a finish coat of Aluminum paint, shall be performed by the Contractor in a good and approved manner.

2.18 The Contractor shall bond of metal pipes or conduits in which cables have been installed to the main earthing system.

2.19 The conduits and accessories shall be adequately protected against mechanical damage as well as corrosion.

3.0 TERMINATION AND STRIGHT THROUGH JOINTS

3.1 Termination and jointing kits for 11KV and 33/66 KV grade XLPE insulated Aluminum cables shall be proven design and make already been extensively used and type tested. Termination kit and jointing kits shall be pre moulded type, taped type or heat shrinkable. The joints and termination shall be tested as per IS 13573. The kit contents shall be of proven design and type tested. Kit contents shall be supplied from the same source as were used for type tested. The kit shall be complete with Aluminum solderless crimping cable lugs and ferrules as DIN standard

The termination kit make and specification shall be strictly as per approval of the Owner.

3.2 The straight through and termination kit shall be suitable to withstand the fault level for 11KV and 33/66KV system

4.0 CABLE GLANDS, LUGS & ACCESSORIES

4.1 The cable shall be terminated using double compression type cable glands. The cable glands shall confirm to BS 6121 and of robust construction capable of clamping the cables and armour firmly without injury to the insulation. The cable glands shall be made out of heavy duty brass machine finished and nickel chrome plated. The thickness of plating shall not be less than 10 micron. The rubber component shall be made out of neoprene and tested quality.

4.2 The trefoil clamps for single core cables shall be pressurized die cast Aluminum or fiber Glass or Nylon and shall include necessary fixing accessories such as GI bolts and nuts. Trefoil clamps shall have adequate mechanical strength to withstand the forces generated by short circuit current.

4.3 Cable End seal (As per BRPL approved make) shall be provided for all Control Cable and Power Cable (including outgoing HT panels) at all the points wherever cable entries in the control room building or between room to room. 30% Spare modules shall be provided along with centre core has to be provided. System shall take up variation margin of +/-3mm in diameter of Cable. For details refer specs.

5.0 DEVIATIONS

Deviation from this specification, if any, shall be clearly brought out in the offer. Unless owner explicitly accepts such deviations, it shall be considered that the offer fully complies with the specification.

BSES

Technical Specification

Of

Exhaust & Ventilation System including Air-conditioning

Specification no – BSES-TS-309-EXVEAIR-R0

Rev:		0
Date:		10 Oct 2025
Prepared by	Supriya Raina	
Reviewed by	Uttam Shukla	
Approved by	Deepti Sharma	

Technical Specification Exhaust and Ventilation System

1.0 INTENT OF SPECIFICATION

1.1 This specification is intended to cover the design, manufacture, assembly, testing at manufacturer's works, supply & delivery, properly packed for transport for site of Air Conditioning system and Ventilation system for substation control room building complete with all materials and accessories for efficient and trouble free operation

1.2 In the event of any discrepancy with the listed documents, the stipulation this specification shall govern.

2.0 SCOPE OF SUPPLY

The following equipment shall be furnished with all accessories.

a) Exhaust Fan system.
b) Air Conditioning
c) All necessary components for operation of the above equipment.
d) All wiring & accessories to complete the installation.
e) All relevant drawings, data & instruction manuals.
f) Mandatory spares.
g) Commissioning spares and recommended spare part list for three (3)

3.0 GENERAL REQUIREMENT

3.1 All equipment and material shall be designed, manufactured and tested in accordance with the latest applicable Indian Standards except where modified and/or supplemented by this specification.

3.2 Equipment and materials conforming to any other standard, which ensures equal or greater quality, may be accepted. In such case copies of the English version of the standard adopted shall be submitted along with the bid.

3.3 In particular, the following standards and specifications are applicable.

3.4 Air conditioners suitable for 230V, 50 Hz single phase AC supply shall be capable of performing the functions as cooling, dehumidifying, air circulating and filtering. The air conditioners shall be complete with automatic temperature control and cut-in and cutout etc. for temperature range 16 to 25 degree C.

3.5 Outdoor unit of the air conditioners shall be fitted discharge cooled type rotary Compressor.

3.6 Air Conditioner shall be 5 Star rated

3.7 Air Conditioning shall maintain 22 Degree Celsius in summers and Winters, Environment condition shall be referred from General Design Criteria Chapter 1

3.8 Approved make of AC is Voltas/LG/Carrier.

3.9 The minimum thickness of the base in outdoor unit shall be 1.20 mm & sheet thickness for rest of the body shall be 0.70 mm (Min.) with galvanized coating thickness of 120 g/ sq. m and shall be provided with stiffeners for robust construction and shall have rounded corners.

3.10 The casing of the indoor units shall be made of ABS/HIPS/GS and shall be impact resistant. The control box of indoor unit shall withstand flame retardant.

3.11 Remote cordless control with LCD/LED Display for Air conditioner shall be provided with one On/Off timer, selecting fan speed (three speed) and setting up of temperature. Display shall be provided on indoor unit or on handset or on both.

3.12 Maximum power consumption of the split air conditioners shall be measured at capacity rating test conditions. Overall power factor of the unit shall be at least 0.85 at capacity rating test conditions

This specification shall be read and constructed in conjunction with the bid documents and annexure to determine the scope of work.

DESIGN CRITERIA

	Air Conditioning shall be supplied in Control Room and Switchgear Room including GIS Room, maintenance room and SCADA room. Exhaust system shall be supplied in following rooms -Toilet – one Pantry- One Cable Celler- Industrial type numbers shall be as per calculation
Number and details of wall mounted/Ceiling fan	Battery room – 1 No Control room – 3 No's Switchgear Room – 6 No's GIS Room-As per Calculation, 6 Nos(Minimum). **Note: Wall mounted fan shall be industrial type, domestic fans shall not be acceptable**
Power Point & socket	Each room shall be provided with at least 2 No's 15 Ampere Switch socket and 2 no's 5 ampere switch sockets. Two no's industrial 16 ampere points shall be provided in control room for installation of air conditioning system for future.

	All equipment, accessories and wiring shall have fungus protection, involving special treatment of insulation and metal against fungus, insects and corrosion.

4.0 DEVIATIONS

Deviation from this specification, if any, shall be clearly brought out in the offer. Unless owner explicitly accepts such deviations, it shall be considered that the offer fully complies with the specification.

BSES

Technical Specification

Of

Fire Extinguisher

Specification no – BSES-TS-313- FIREX-R0

Rev:		0
Date:		19 Nov 2025
Prepared by	Alok Mandal	
Reviewed by	Uttam Shukla	
Approved by	Deepti Sharma	

Technical Specification Fire Extinguisher

1.0 INTENT OF SPECIFICATION:

This specification is intended to cover the design, manufacture, assembly, testing at manufacturer's works, supply & delivery, properly packed for transport FOR site of Portable wall and trolley mounted Fire extinguisher and fire buckets for substation control room building complete with all materials and accessories for efficient and trouble free operation.

In the even of any discrepancy with the listed documents, the stipulation of this specification shall govern.

2.0 SCOPE OF WORK

2.1 Scope of Supply

The following equipment shall be furnished with all accessories:-

a) Wall mounted fire extinguisher-15 Nos. of 4.5kG (CO_2 Type)
b) Trolley mounted fire extinguisher- 5 Nos. of 22.5kg (CO_2 Type)
c) Sand buckets with stand- 4 Set with 4 bucket in each stand
d) All installation hardware.
e) All relevant drawings, data & instruction manuals.
f) Mandatory spares.
g) Commissioning spares and recommended spare part list for three (3) years of operation.
h) Rubber Mat for entire Indoor equipments front and backside(as per latest IS)

3.0 GENERAL REQUIREMENT

3.1 Codes and Standard

All equipment and material shall be designed, manufactured and tested in accordance with the latest applicable Indian Standards except where modified and/or supplemented by this specification.

Equipment and materials conforming to any other standard which ensures equal or greater quality may be accepted. In such case copies of the English version of the standard adopted shall be submitted along with the bid.

In particular, the following standards and specifications are applicable.

Indian Electricity Rules	Relevant safety regulation of CEA
Indian electricity act	
IS 2190	Selection, installation & maintenance of first aid, fire extinguisher.
	Tariff Advisory Committee Manual
IS 1646	Code for practice for fire safety of buildings
IS 940	Portable fire extinguisher, Water type - specification
IS 2878	Fire extinguisher CO2 type
IS 2171	Specification for fire extinguisher dry powder.
IS 10204	Specification for fire extinguisher Mechanical foam type.

This specification shall be read and constructed in conjunction with the bid documents and annexure to determine the scope of work.

4.0 DESIGN CRITERIA

General	The contractor shall supply the required type and quantities of fire extinguisher and Sand buckets. The quantity shall be as per TAC recommendations.
Location	Fire extinguisher and sand buckets shall be installed in Control room, battery room, switchgear room, ACDB & battery charger room, Cable cellar, Transformer yard, Outdoor switchyard and Capacitor bank.
Distribution	The fire extinguishers in various locations shall be as per the guidelines of TAC-India.
Tests	All equipment shall be completely assembled wired, adjusted and routine tested at the factory as per relevant standards.

5.0 DEVIATIONS

Deviation from this specification, if any, shall be clearly brought out in the offer. Unless owner explicitly accepts such deviations, it shall be considered that the offer fully complies with the specification.

BSES

Technical Specification

Of

Fire Suppression System

Specification no – BSES-TS-314-FIRSP-R0

Rev:		1
Date:		19 Nov 2025
Prepared by	Alok Mandal	
Reviewed by	Uttam Shukla	
Approved by	Deepti Sharma	

Index

1.0 Scope
2.0 Code and Standards
3.0 Service Conditions
4.0 General Requirement
5.0 System Design
6.0 Installation, Testing and Commissioning
7.0 Maintenance
8.0 Drawing and Data submission
9.0 Shipping
10.0 Handling and Storage
11.0 Quality
12.0 Deviation
13.0 Testing and Inspection
14.0 Training

1.0. SCOPE:

Switchgear Panel Fire Suppression System: This includes Supply, Installation, Testing and Commissioning of Suppression system.

2.0. CODE AND STANDARDS:

This specification shall be governed by following standards/rules & regulations with all amendments unless otherwise specified in this specification.

S.No.	Standard Name / No	Standard's Description
1	AS 1670.1, AS1603.8, ASNZS 3000	Latest Edition
2	Indian electricity act 2013	Latest Edition
3	Fire Industry Association (FIA), Code of Practice for Design, Installation, Commissioning and Maintenance of Aspirating Smoke Detector (ASD) Systems	Latest Edition
4	NFPA Standards	2001 (2015 Edition)
5	NEC Standards, US	Latest Edition
6	NZS 4512	2003
7	Residential Fire and Burglary:– Household Fire Warning System Units – ANSI/UL 985, 2000/05/26 (5th edition) with revisions up to2004/04/29	Latest Edition
8	IS-875	Latest Edition
9	Local Fire Authority	Delhi
10	National Building Code	Part 4 Fire and life safety 2016

3.0. SERVICE CONDITIONS:

S.No	Particulars	Data
1	Design Ambient temperature	0°C to 50 °C
2	Seismic Condition	Zone IV as per IS 1893
3	Wind Pressure	195 kg/M² upto elevation of 30 M as per IS 875
4	Maximum Relative Humidity	100%
5	Maximum Altitude above Sea level	1000M

6	Rainfall	750mm (concentrated in 4 months)
7	Pollution level	Heavy/Dry
8	Average of no thunderstorm days	40 per annum

4.0. Scope of Work:

a. Supply, Installation, Testing and Commissioning of clean Agent Novec 1230/equivalent Fire Suppression system designed to provide a uniform concentration within the electrical panels in accordance with NFPA 2001 and requirements of the contract documents.

b. Provide all engineering design and materials for a complete agent suppression system including Novec 1230/equivalent storage cylinders with steel bracket, extinguishing agent, detection tube, cylinder valve and associated accessories including but not limit to; adaptors, pressure switch, Fire Detection tube fittings etc, required for complete operation of system.

c. All necessary safety requirements such as warning signs, discharge alarm shall be part of system.

d. The necessary nomenclature such as pressurization level, agent volume, and gross/net weight of cylinder shall be clearly marked on cylinder.

e. Prior to supply of material at site. Contractor must submit following documents for approval of Engineer-in-charge.

f. Drawing in A-4 size, clearly showing the panel, routing of tube inside the panel, location and fixing arrangement of cylinder & system components.

5.0 System Description:

a) The detection tube shall be fixed with cylinder valve at top of cylinder. The tube shall be pressurized with dry nitrogen at 16 bars. In case of fire and on reaching of pre-determined temperature, the tube shall rupture and gas shall be released from tube/ discharge nozzle over the protected area.

b) The pressure switch shall be provided for necessary indication of discharge of gas.

c) The Extinguishing Agent shall be stored in cylinder as liquefied compressed gas, super pressurized with dry nitrogen at 195 psi minimum

d) The cylinder shall be equipped with brass valve, pressure gauge (to monitor agent pressure) and isolation valve for maintenance purposes. The cylinder bracket shall be of steel construction with quick release clamp.

e) The detection tube shall be installed throughout the compartments of panel. The location and spacing of tube shall be above the hazard, to be protected.

f) In case of ILP System Nozzles shall be placed properly over the protected area.

g) With system activation, a signal should be generated via Audio Visual Alarm installed at convenient location as per Engineer-in-Charge.

6.0 System Components:

The bidder shall provide an under taking from Principle Manufacturer of product they intent to install, that manufacturer will fully support the bidder for this specific project.

a) Cylinder of steel construction with standard red epoxy paint finish. Cylinders shall be accompanied by original manufacturers test certificate confirming the contents of the cylinder.

b) The cylinders shall be from reputed Manufacturers only. Cylinders shall be super pressurized with dry nitrogen to an operating pressure and temperature as per manufacturer recommendations.

c) Each cylinder shall have pressure gauge and low pressure switch to provide visual and electrical supervision of the cylinder pressure. The low pressure switch shall be wired to the Audio Visual Alarm to provide audible and visual trouble alarm in the event of drop of pressure. The pressure gauge shall be color coded to provide an easy, visual indication of cylinder pressure.

d) Furnish a welded steel bracket with each cylinder assembly for holding the cylinders in a saddle with a front bracket piece that secures the cylinders.

e) The Detection Tube, should be UL approved, UL approval marking, Red Color.

f) The Pressure Switch should be UL Listed/CE Marked having NO/NC contact.

g) DLP/ILP Valves should be CE/ISO/EN approved and π marked.

h) All the Power and Control Cables shall be FRLS type.

i) System shall give signals to SCADA on through communication port.

MANDATORY APPROVALS/CERTIFICATES SHALL BE REQUIRED

1. Authorization letter from Principal OEM of System
2. Authorization Letter from OEM of Clean Agent(UL/FM).
3. Pneumatic Heat Sensing Tube- UL Listed and marked
4. Valve shall be π marked
5. Pressure Switch Assembly: UL/CE approved
6. UL Approved filling station.

7.0. MAINTENANCE

Bidder shall furnish a maintenance manual and support maintenance activity.

8.0. DRAWING AND DATA SUBMISSION

8.1	Submissions along with the bid	
8.1.1	Duly filled GTP and copy of specification	2 copies + 1 soft copy

9.0. SHIPPING

9.1	Shipping	The bidder shall ascertain at an early date and definitely before the commencement of

		manufacture, any transport limitations such as weights, dimensions, road culverts, Overhead lines, free access etc. from the Manufacturing plant to the project site. Bidder shall furnish the confirmation that the proposed Packages can be safely transported, as normal or oversize packages, up to the site. Any modifications required in the infrastructure and cost thereof in this connection shall be brought to the notice of the Purchaser.
		The Bidder shall be responsible for all transit damage due to improper packing.

10.0. HANDLING AND STORAGE

10.0	Handling and Storage	Manufacturer instruction shall be followed. Detail handling & storage instruction sheet / manual needs to be furnished before commencement of supply.

11.0. QUALITY & INSPECTION

11.1	Vendor quality plan	To be submitted for purchaser approval
11.2	Testing & Inspection	As per relevant standards

12.0 Warranty

Warranty shall be 5 Years Minimum. Vendor shall provide free maintenance during warranty period.

Following activities shall be included during period of warranty.

1. one visit by service engineer for general check up -- once in a six month time on each location.
2. Functionality test of the entire system -- once in one year time on each Location.

3. Mandatory Spares shall be provided for upkeeping of system for the period of 5 Years.

13.0 DEVIATION

13.1	Deviation	Deviations from this Specification shall be stated in writing with the tender by reference to the Specification clause/GTP/Drawing and a description of the alternative offer. In absence of such a statement, it will be assumed that the bidder complies fully with this specification. No deviation will be acceptable post order.

14.0 TRAINING

Training on installation, commissioning, operation and maintenance shall be included in the quotation.

- At site after installation- 1 Manday

BSES

Technical Specification

Of

Closed Circuit Television (CCTV) Video Surveillance System

Specification no – BSES-TS-310-VCCTV-R3

Rev:		3
Date:		10 Oct 2025
Prepared by	Alok Mandal	
Reviewed by	Uttam Shukla	
Approved by	Deepti Sharma	

Contents

1.0 SCOPE 3
2.0 CODES AND STANDARDS 3
3.0 CYBER SECURITY 4
4.0 SCOPE OF SUPPLY ITEMS 6
5.0 SCOPE OF SERVICE 9
6.0 TESTS 10
7.0 COMPLETENESS OF EQUIPMENT 10
8.0 PACKINGS 10

1.0 SCOPE

- Design, Engineering, Procurement of bought out items, manufacture, integration, inspection, factory testing and supply of complete CCTV System for the entire plant/grid/ss as per requisition consisting of following including necessary hardware, software and accessories as applicable.

2.0 CODES AND STANDARDS

Sl no.	Heading	Function Description
2.1	IS:1248, Part 1- 1993	Direct acting indicating analogue electrical measuring instruments and their accessories.
2.2	IEC:60688	Electrical measuring transducers.
2.3	IS:3231, Part 1- 1986 Part 2 &3 -1987	Electrical relays for power system protection.
2.4	IS:12729	Routine tests.
2.5	IEEE: 908-2018	Standard Guide for Safety in Substations.
2.6	IS:9000 Part 1 -1988	Basic environmental testing procedures for electronics & electrical items.
2.7	IEC:60255 / IEC61000	Specification for electrical relays. Measuring relays and protection equipment.
2.8	IEE:C37.24-2018	Standard for Power System Relaying terms and definitions.
2.9	IEEE:C37.90-2005	All Protection Trip Relays.
2.10	IEEE:C37.112-2010	Guide for relay application in power systems.
2.11	IS:9000 part1-1998	Basic environmental testing procedures for electronics & electrical items.
2.12	IEEE:80	Guide for Safety in AC Substation Design.
2.13	IS:13703 - 1993	Low voltage fuses for voltages not exceeding 1000V AC or 1500V DC.
2.14	IEC:60629	Low Voltage fuses.
2.15	IEC:60282	High Voltage fuses.
2.16	IS:9244(part3) / IS:13703	HRC fuses.
2.17	IS:694	PVC insulated cables for working voltages upto and including 1100V.
2.18	IS:722	AC Electricity meters.
2.19	IEC:61850	Communication Networks and Systems in substations.
2.20	IEC:60529	Degrees of Protection provided by Enclosures.

2.21	IS:2982	Copper conductor in insulated cables.
2.22	IS:3961 (part1-part5)	Current rating for cables.
2.23	IS:5831	PVC insulating and sheath of electrical cables.
2.24	IS:375	Auxiliary wirings.
2.25	IS:1248	Indicating instruments and other applicable standards.
2.26	IEC:62351	Cyber Security type tests of IEDs/Numerical relays/Gateways/Transformer Tap controllers/Changers, etc with IEC 61850, IEC101, IEC103, IEC104 communication protocol network systems.
2.27	IEC:27036 IEC:20243 IEC:62443	Supply Electrical Devices from outside India, type tests for communications, cyber security conformance tests.
2.28	IEC:60973	OFC used for various equipments & panels located in AC/DC Switchyards, Control rooms, valve halls to transmit the required signals for integration, control, monitor, etc.

3.0 CYBER SECURITY

Sl no	Heading	Function description
3.1	Reference Standards	IEC:61850 – 5 to 10, IEC:27036, IEC:20243, IEC:62443, IEC:62351 and other relevant standards of IS/IEC/ANSI/IEEE,etc must be incorporated and Rules & Standards of Govt. of India, Ministry of Power/Other Central, State Departments & International best practice on Cyber security in Electrical Power Systems.
3.2	Policy	The documented type test & conformance valid parameters for a set of business rules and process for protecting information, computer resources, networks, devices, electrical/electronic programmable devices, software's, industrial control systems and other Information Technology (IT) / Operation Technology (OT) systems shall be used to protect a sensitive & critical infrastructure of Electrical Power generation, transmission, distribution in protections, control operations, measurements, monitoring purposes.
3.3	Cyber Security Threats, Violations, Incidents, Unauthorized access on Power System ITs/OTs.	Cyber security violation/incident occurs by unauthorized or illegitimate accessor a person, group of persons, entity, of data, applications, services, networks and/or devices through bypass of the underlying cyber security protocols, policies and mechanisms resulting in the compromise of the confidentiality, integrity or availability of data/information maintained in a computer resource,

		protection equipment's, protection devices, sensors, meter devices, mechanism, automation, RTUs, PLCs, SCADA and other connected within respective electrical utilities & organizations.
3.4	Cyber Security systems	The cyber security of electrical power systems/ networks shall be available to protect the security, integrity and reliability. The protection of IED's/other Electric/Electronic devices information (or data's) against unauthorized or destruction whether accidental or intentional.
3.5	Critical Assets	The critical assets shall be of system, equipments and facilities which, if destroyed, degraded or otherwise declared unavailable, would affect the reliability or operability of the electrical power system.
3.6	Type test reports IEC:62443, IEC:62351 (India made devices)	The IEDs, RTU, FRTUs, PLCs, SCADA, Communication network switches, any related programmable software's/hardware's, etc systems that involved in electrical power sector for control & monitoring critical information shall be verified for a sample size for testing minimum one number from each make, type and having same firmware version for the supply one lot size of 200 numbers or less.
3.7	Type test reports IEC:62443, IEC:62351 (India made devices)	The Smart meters, other energy meters the sample six for testing shall be minimum one number for each make, type and have same firmware version for the supply one lot size of 5000 numbers or less.
3.8	Type test reports IEC:27036 IEC:62443 IEC:62351 IEC:20243 (Other country made devices)	The IEDs, RTU, FRTUs, PLCs, SCADA, Meters, Communication network switches, any related programmable software's/hardware's, etc systems that involved in electrical power sector for control & monitoring critical information for importing products/system shall be verified for a sample size 5% of the supply lot for each make, type and having same firmware version for the supply lot.
3.9	Protection & Control devices, Network & Programmable devices of substation equipment's	The IEDs, Communication Networks related devices, Software's, Hardware's in relation of critical electrical equipment which ever transfer data files, control & monitoring data files within power sector, state utilities for reliable power sector, which is a strategic & critical sector.
3.10	RTU domain cyber security terms & conditions	As the RTU/SCADA system will use public domain, such as LAN/VSAT/GPRS/CDMA/SATELLITE Based networks for communication media, therefore it is mandatory to guard the data / equipment from intrusion/damage/breach of security & shall have SSL/VPN based security.
3.11	IED'S like Protection devices, Control devices.	Communication protocol conformance standards shall be followed as per IEC 61850-5 to IEC 61850-10 and respective clauses.

3.12	RTUs,FRTUs,SCADA, PLC, etc with IEC communications.	Communication protocol conformance standards shall be followed as per IEC:60870-5-101/ IEC:60870-5-103/ IEC: 60870-5-104 and respective clauses.
3.13		Protocol Security conformance standards shall be followed as per IEC:60870-7, IEC:62351-100 part1&3 and respective clauses.
3.14	Smart meters with IEC 62056	Protocol Security conformance & Communication protocol conformance standards shall be followed as per IS:15959 series, IS:16444 series and respective clauses.
3.15	Mandatory tests case	The test is referencing a clause that is mandatory in IEC: TS 62351-5, IEC: TS 60870-5, IEC: 62351-3 which defines the requirements related to the authentication/encryption protocol, procedures and methods to be implemented at Fiber, TCP/IP(transport) level, Modbus,etc.
3.16	Approved/ Designated Laboratories	Central Power Research Institute (CPRI) approved laboratory for IEDs, RTU, FRTUs, SCADA, PLC systems. Central Power Research Institute (CPRI) Electrical Research & Development Association (ERDA), Yadav Measurements Pvt Ltd(YMPL) for Smart meter devices. If any other departments if approved shall be as per Ministry of Power/Other related departments for confirmation of Cyber security in power systems. If any changes according to Govt.rules/notifications/MoP,etc the same shall be incorporated time to time without cost implications.
3.17	Miscellaneous	Words and expressions used and not identified in these above regulations but defined in the information technology Act 2000 and the Electricity Act, 2003 shall be followed for cyber security of power system time to time.
3.18	Certificates Validity	Product certifications/type test reports of any Electrical/Electronic devices connected in power systems for respective protection/functions/controls/monitoring shall not be older than 5 years during supply of same items.
3.19	Reports	All necessary type test reports, certifications shall be submitted for RTU panel/ Equipments at Pre Bid / Engineering/ Inspection by supplier/vendor.
3.20	RTU Processor	RTU Processor with enhanced cyber security features, SNMPv3, https, SSL and TLS based encryption for 104 communications and shall comply with IEC 62351-3, IEC 62443-4-1, IEC62443-4-2 std for cyber security requirements for Industrial OT system.

4.0 SCOPE OF SUPPLY ITEMS

Sl no.	Function Description
4.1	**CCTV Camera**

4.2	**CCTV cameras suitable for remote operation with all necessary accessories and installation hardware consisting of but not limited to the following:**
4.2.1	High speed zoom lens.
4.2.2	360º camera
4.2.3	Automatic Iris
4.2.4	Pan & Tilt Unit
4.2.5	Receiver Unit
4.2.6	Weather proof junction box
4.2.7	Weather proof housing for unit camera.
4.2.8	Glass dome with reflector shield on outside.
4.2.9	Night vision.
4.2.10	One set of 360º camera shall be installed before start of work.
4.2.11	Application for monitoring of VMS (License for 2 year)
4.2.12	Analytics enabled for Local support (LMS) which should cover intrusion detection, Fire alarm, vehicle tracking, FRS, etc.
4.3	**System Cabinet consisting of following:**
4.3.1	Video encoder, network switches, etc.
4.3.2	Central control unit with all control functions like pan, tilt, focus and consisting of switching unit.
4.3.3	Video motion detection system.
4.3.4	Video recorder to record video images.
4.3.5	Buzzer for alert/alarm.
4.4	2 Nos 21” FULL HD, LED Monitor with HDMI interface to CPU with keyboard, optical mouse for monitoring at MAIN CONTROL ROOM & SECURITY ROOM.
4.5	Monitoring unit also including programming unit consisting of programming Monitor LED 21”, Keyboard and optical mouse, independent of monitoring unit with all required hardware and software for CCTV functioning.
4.6	All furniture required in the MAIN CONTROL ROOM & SECURITY ROOM, to mount the CCTV equipment like TV, PC-CPU, Server, Keyboard, Mouse, DVR, etc.
4.7	All types of cables (Video, Control/data, Optic Fiber and Power supply, etc) cable glands, plugs, connectors and accessories for interconnection of all the equipments supplied by vendor.
4.8	Junction boxes, Power distribution boxes, repeaters, cable glands, etc. as necessary.

4.9	Mounting poles for mounting the camera along with a climbing ladder.
4.10	The Ladder to be provided with wheels & brakes for easy movement on roads.
4.11	HDPE pipe with required pipe fittings for laying optical fiber cables between CCTV cameras in MAIN CONTROL ROOM &MAIN CONTROL ROOM TO SECURITY ROOM (gate/ security house).
4.12	Cable trays for CCTV cables within control rooms with required accessories in case required at site. Cable trays outside control room (where main cable duct is not available) Buried cable trench for cabling along the boundary walls.
4.13	All necessary supports for installation of all items supplied by vendor.
4.14	All mounting accessories required to mount various items supplied by vendor.
4.15	Earthing material required for earthing of CCTV equipment installed by vendor.
4.16	Necessary base frame support for mounting CCTV cabinets in MAIN CONTROL ROOM.
4.17	Any other item necessary but not specially listed for successful operation of CCTV system.
4.18	Packing, forwarding, transportation and storage at site of complete CCTV system and accessories.
4.19	Supply of special instrument or tools needed for testing, calibration and maintenance offered CCTV system.
4.20	Supply of consumables and commissioning spares as per requisition for CCTV system.
4.21	Any other item or/and activity not listed/indicated specifically but necessary for success operation of CCTV system.
4.22	CCTV monitoring of the site & image capture in case of an intrusion.
4.23	Future hardware expansion facility.
4.24	The CCTV system shall be supporting high resolution viewing & recording.
4.25	The images shall be transferred to a central location or on Mobile using internet connectivity.
4.26	The Video Surveillance System shall be CE & FCC certified and also STQC approved camera should be deployed as per OT Grid norms of BSES.
4.27	Complete Video Surveillance System shall be from the same manufacturer.
4.28	The Video Surveillance System should be design to work on Low Bandwidth WAN with following considerations
4.28.1	Camera stream: H 265
4.28.2	Camera resolution: 4CIF (704x480)
4.28.3	Video quality: Medium
4.28.4	Number of cameras: 01
4.28.5	Frame rate per camera at site: 25FPS
4.28.6	Frame rate per camera at center: 15FPS
4.28.7	Recording type: Continuous 24 Hours per day.
4.28.8	Desired Days of storage per camera: min.30 days.

All cameras should support dual stream and configured in such a way that one stream should provide feed to central control center and other stream should be capable to support edge

recording (memory card on camera or NVR). Video Surveillance System should be intelligent to monitor WAN and whenever there is outage or central control center not reachable camera should start recording on memory card or NVR present on camera and capable to restore the data to the central system in the missing area.

5.0 SCOPE OF SERVICE

Sl no.	Function Description
5.1	Installation, Integration of complete CCTV – Video Surveillance System and associated accessories including calibration, cabling, junction boxes, power supply, distribution boxes, etc.
5.2	Installation of CCTV cameras. The cameras to be mounted on top of Pole, so as no blind spot are created due to pole.
5.3	Installation of CCTV monitor for monitors located in MAIN CONTROL ROOM and monitors located in SECURITY CONTROL ROOM (gate/security house)
5.4	Installation of monitor located in MCR and Security Control room.
5.5	Installation of CCTV cabinets for various units.
5.6	Installation of programming unit PC.
5.7	Installation of various junction boxes (signal, power, control) supplied by vendor.
5.8	Laying of co-axial / optical fiber cable between CCTV Camera & Control Console Cabinets.
5.9	Laying of power cable between CCTV Cameras and CCTV Cabinet in MCR.
5.10	Laying of CCTV Cables (video, control, data, power).
5.11	Laying of CCTV Fiber Optic Cables between MCR and Security Control Room.
5.12	Termination, ferruling and glanding at both ends and interconnection of various cables (video, optical, control, power) supplied by vendor for complete CCTV system.
5.13	Distribution of power supply and reduction to required levels to various CCTV equipment supplied by vendor.
5.14	Integration of CCTV Camera with BSES-BRPL/BYPL Network.
5.15	**The entire IP Surveillance System to be designed to control and monitor the location provided based on the following considerations:**
5.15.1	Camera to be of 4 MP (all to be integrated in the VMS present and future).
5.15.2	CCTV System should be design to work on WAN with at lower bandwidth as low as (256 KBPS per Camera). Objects or persons should be identified under low bandwidth Scenario.
5.15.3	Bandwidth should be configurable.
5.15.4	System should be design to work and record on 15 FPS and 1 MP centrally.
5.15.5	System should be design with event based and continuous recording as and when required.
5.16	**Four types of cameras shall be considered to monitor the movement of the people as follows:**

5.16.1	Indoor
5.16.2	Outdoor
5.16.3	PTZ
5.16.4	360º Outdoor
5.17	All cameras shall be True Day/Night function IP Camera.
5.18	Analytics to be inbuilt at camera side like – Face capture, Trip Wire, Counter, Object removal, Motion detection.
5.19	All cabling including LAN network will be in scope of vendor in case of open through ISI Mark PVT / GI pipes or concealed through ISI Mark PVT / HDPE pipe.
5.20	L2 POE Cisco switches should be used to power-up the camera in case of 4 or more at a location else power adapter to be used to power up the cameras.
5.21	Servers should be either HP / IBM.
5.22	Servers should be planned in redundancy.

6.0 TESTS

All equipment with their terminal connectors, and other hardware etc., shall conform to type tests and shall be subjected to routine and acceptance tests in accordance with Latest Relevant IS .

7.0 COMPLETENESS OF EQUIPMENT

Any fittings, accessories or apparatus which may not have been specifically mentioned in this specification but which are usually necessary for the satisfactory operation of the equipment, shall be deemed to have been included in this specification.

8.0 PACKINGS

All material shall be suitably packed for transport, direct to site and Manufacturer shall be responsible for all damages/losses due to improper packing. All boxes shall be marked with signs indicating the up and down sides of the boxes along with the unpacking instructions, if considered necessary by the Manufacturers.

BSES

Technical Specification

Of

Fire Detection & Alarm System

Specification no – BSES-TS-315-FIRDA-R0

Rev:		0
Date:		19 Nov 2025
Prepared by	Alok Mandal	
Reviewed by	Uttam Shukla	
Approved by	Deepti Sharma	

Technical Specification Fire Detection and Alarm System

1.0 INTENT OF SPECIFICATION:

This specification is intended to cover the design, manufacture, assembly, testing at manufacturer's works, supply & delivery, properly packed for transport FOR site of Fire and smoke Detection & Alarm System for substation control room building complete with all materials and accessories for efficient and trouble free operation.

In the even of any discrepancy with the listed documents, the stipulation of this specification shall govern.

2.0 SCOPE OF WORK

2.1 Scope of Supply

The following equipment shall be furnished with all accessories :-

a) Smoke and heat detectors and installation.
b) Manual call point for the substation building.
c) Fire detection alarm panels which shall be SCADA compatible along with its integration with SCADA.
d) All wiring & accessories to complete the installation.
e) All installation hardware.
f) All relevant drawings, data & instruction manuals.

3.0 GENERAL REQUIREMENT

3.1 Codes and Standard

All equipment and material shall be designed, manufactured and tested in accordance with the latest applicable Indian Standards except where modified and/or supplemented by this specification.

Equipment and materials conforming to any other standard which ensures equal or greater quality may be accepted. In such case copies of the English version of the standard adopted shall be submitted along with the bid.

In particular, the following standards and specifications are applicable.

Indian Electricity Rules	Relevant safety regulation of CEA
Indian electricity act	
CBIP manual	
IS 2189	Code of practice for selection, installation & maintenance of automatic fire alarm system.
IS 2190	Selection, installation & maintenance of first aid, fire extinguisher.
IS 1646	Tariff Advisory Committee Manual
	Code for practice for fire safety of buildings

Technical Specification Fire Detection and Alarm System

This specification shall be read and constructed in conjunction with the bid documents and annexure to determine the scope of work.

4.0 DESIGN CRITERIA

General	1. The fire detection system shall consist of various types of fire detectors, control cabling, fire alarm panels, central monitoring station, annunciation/control panels, local panels. 2. The fire detection and alarm system shall be microprocessor based, analogue addressable system. 3. A central monitoring system shall be provided in the control room covering complete substation. 4. The control system shall be compatible to be interfaced with SCADA system through separate communication port.
Location	Fire detectors shall be provided for the entire substation building including control room, switchgear room, battery charger, corridors, Cable Celler etc.Fire detectors shall be located at strategic location in various rooms of the building.
Operation	The operation of any of the fire detectors / manual call point should result in the following : a) A visual signal exhibited in the alarm panel indicating the area where the fire is detected. b) An audible alarm (Hooter) sounded in the panel. c) An external alarm sounded in the building, location of which shall be decided during detailed engineering. d) An alarm should be signaled to the control room.
Detection & Alarm system	1. Each zone shall be provided with two zone cards in the panel so that system will remain healthy even if one the cards become defective which shall be indicated at SCADA . 2. The control panel shall be suitable for 230V AC and 220V DC as power supply.
Cabling	The detector cable and the other control cable shall be armoured, screened and twisted FRLS type in external areas and shall be of unarmoured FRLS type inside building (in conduits)
Tests	All equipment shall be completely assembled wired, adjusted and routine tested at the factory as per relevant standards.
	Following tests shall be performed on the system a) Response characteristics of fire detectors. b) Performance test on fire extinguisher as required in the code. c) A comprehensive visual and functional check for the fire alarm panel. d) Verification of wiring as per approved schematic. e) Testing of fire detection panel as per BS3116 Part IV.
Site Test	All the detectors installed shall be tested for actuation by bringing a suitable smoke source near the detector creating a stream smoke over the detector. After each test smoky atmosphere should be cleared so that the detector shall reset.

	Certify proper operation of all detectors and call points.
	One of each type of extinguisher shall be tested for its performance.

5.0 DEVIATIONS

Deviation from this specification, if any, shall be clearly brought out in the offer. Unless owner explicitly accepts such deviations, it shall be considered that the offer fully complies with the specification.

BSES Rajdhani Power Limited
BSES Bhawan, Nehru Place, New Delhi- 19

TECHNICAL SPECIFICATION

FOR

PACKING & TRANSPORTATION

Prepared by	Sonia Mittal	Mittal	Rev: 1
Reviewed by	Uttam Shukla	Shukla.	Date: 19th Nov., 2025
Approved by	Deepti Sharma	Deepti	

Technical Specification Packing and Transportation

1.0 PACKING AND TRANSPORTATION

1.1 Packing shall be sturdy and adequate to protect all assemblies, components and accessories from injury by corrosion, dampness, heavy rains, breakage and vibration encountered during transportation, handling and storage at the plant site. All accessories, which are likely to get damaged during transit if transported mounted on the equipment, shall be removed, adequately packed and shipped separately. All openings shall be sealed. Spare parts shall be packed separately and clearly marked. They shall be specially packed for long storage without injury.

1.2 The bidder shall after proper painting, pack and crate all plant equipment for sea shipment/air freight in a manner suitable for export to a tropical humid and saline air borne climate region as per Internationally accepted export practice in such a manner so as to protect it from damage and deterioration in transit by road, rail and/or sea and during storage at site till the time of erection. The bidder shall be held responsible for all damages due to improper packing.

1.3 The bidder shall give complete shipping information concerning the weight, size, contents of each package including any other information the Owner may require. The weight and size of the package shall be such that they can be easily transported from the maker's works to the plant site by ship/air, road ways and railways.

1.4 The bidder shall ascertain at an early date and definitely before the commencement of manufacture, any transport limitations such as weights, dimensions, road culverts, overhead lines, free access etc. from the manufacturing plant to the project site; and furnish to the Owner confirmation that the proposed packages can be safely transported, as normal or oversize packages, upto the plant site. Any modifications required in the infrastructure and cost thereof in this connection shall be done and borne by the bidder.

1.5 The bidder shall prepare detailed packing list of all packages and containers, bundles and loose materials forming each and every consignment dispatched to 'site'. The bidder shall further be responsible, for making all necessary arrangements for loading, unloading and other handling right from his works; and from Indian port for equipment under the Off-shore Supply till the 'site' and also till the equipment is erected, tested and commissioned. The bidder shall be solely responsible for proper storage and safe custody of all equipment.

1.6 All packages must be marked consecutively from number one upwards covering all shipments until completion of the plant equipment execution without repeating the same number. Each box, crate, case bundle or each piece of lose material shall be painted with a combination of one white band and one yellow band of a least 4 cm wide each, round the body of the box, crates, etc as the case be for easy identification.

2.0 **It is mandatory** : GPS instrument must be installed for proper tracking of material during transit of major equipment like Transformer, GIS Panel,11KV & 66 KV panels etc. of MAP my india make (asset tracking system)

3.0 DEVIATIONS

Deviation from this specification, if any, shall be clearly brought out in the offer. Unless owner explicitly accepts such deviations, it shall be considered that the offer fully complies with the specification.

BSES Rajdhani Power Limited
BSES Bhawan, Nehru Place, New Delhi- 19

TECHNICAL SPECIFICATION

FOR

MATERIALS WORKMANSHIP & TEST

Prepared by	Sonia Mittal		Rev: 0
Reviewed by	Uttam Shukla		Date: 21.11.2025
Approved by	Deepti Sharma		

1.0 MATERIAL, WORKMANSHIP & TESTS

1.1 General

All materials used in the manufacture of the offered plant equipment shall be of high grade, free from defects and imperfections, of recent manufacture and unused. Materials not specifically described elsewhere, shall as far as applicable and practicable conform to the latest specification of ISS where applicable and equivalent International Standards. Liberal factors of safety shall be used throughout the design for all parts of plant equipment when subjected to the most severe operating conditions. The working stress in all parts of the plant equipment shall be bestowed with ample margins for possible overstressing due to shock.

All work shall be performed and completed in accordance with the best modern shop practice in manufacture of high grade equipment.

Castings shall be free from blow-holes, flaws, cracks or other defects; and shall be smooth, close-grained and of true form and dimensions. No plugged or filled-up holes or other defects will be accepted. No casting shall be burned, plugged, patched or welded; and no repairs or defects will be accepted.

All materials, supplies, parts and assemblies supplied under this specification shall be tested as far as reasonably practical.

All welded joints shall be free from defects such as blow-holes, slag inclusions, lack of penetrations, under-cuts, cracks etc; and shall be made by qualified and tested welders. Slag shall be ground after joint completion; and well reinforced smooth welds shall be made.

1.2 Inspection, Testing program and Notification

Before manufacture commences, the contractor shall submit an outline of the proposed inspection and testing programmes (Quality Assurance Programme - QAP) for all major stages during manufacturing of major equipment. This inspection and testing programme shall include for the various items, the designation number, the kind of test, test standard and the extent of witness by the Owner/Engineer or third party.

The notification of the individual witness inspections made by the Owner/Engineer or the third party, shall be given by the contractor using facsimile or telex or e-mail in a format to be agreed upon. The contractor shall notify the Owner/Engineer within 21 days prior to the date on and the place at which item shall be ready for testing. If any postponement becomes necessary, the contractor shall provide written notification of same at least 72 hours prior to the originally scheduled date.

If the Owner/Engineer does not attend the test at the place and at the date which the contractor has stated in his notification, the contractor shall proceed with the test, which shall

be deemed to have been made in their presence and shall forthwith forward to them duly certified copies of the test readings.

Before erection commences, the contractor shall submit an outline of the proposed erection inspection and test programme during the erection of major systems. The individual testing procedure shall be submitted as progress of erection work of the equipment, systems and/or units, coordinated with relevant work of the complete plant.

Before commissioning commences, the contractor shall submit an outline of the proposed commissioning test procedure. The test programmes shall be maintained by the contractor during erection and commissioning.

1.3 Test : General

During manufacture, the Owner's representative shall have the right to expedite and/or inspect design, materials, workmanship and progress of manufacture of the contractor's and his sub-contractor's plant system equipment and may reject any defective materials considered unsuitable for the intended purpose or which does not comply with the intent of this specification. The contractor, upon any such rejection by the Owner or his representative, shall rectify or replace the defective or unsuitable material. The contractor shall provide every reasonable inspection facility to the Owner's inspector or representative at his own and his sub-contractor's works.

Material being furnished against this order shall only be shipped when factory inspection satisfactory to the Owner and/or his representative has been conducted. Such inspection and acceptance for shipment shall not however, relieve the contractor from entire responsibility for furnishing the plant system equipment conforming to the requirement of this specification nor shall prejudice any claim, right or privilege which the Owner may have, because of the use or supply of defective or unsatisfactory materials for the plant system equipment. Should the inspection be waived by the Owner, such waiver shall not also relieve the contractor in any way, from his entire obligations under this order.
The plant system equipment shall at factory or after installation be demonstrated capable of performing satisfactorily upto the contractor's guaranteed performance. All tests required by this specification, including retests and inspection, that may be necessary owing to failure to meet any tests specified, shall be made at the contractor's expense. Additional tests, as necessary, shall be made to locate any such failure and after determining the causes of failure and rectifying it, specified tests shall be repeated to establish that the rebuilt plant system equipment meets with the specification in every respect. Should the equipment ultimately fail to pass the tests specified, the Owner will have the option to reject the unit.

The bidder shall state in the proposal, the shop testing facilities available. Should full capacity testing equipment be not available, the bidder shall state the method proposed to be adopted with detailed computations and justification for adopting such a method to reliably ascertain the equipment characteristics corresponding to full capacity testing.

1.4 Test Certificate

In accordance with approved QCP, the results of the tests shall be certified by the Owner/Engineer or independent agency as applicable. As and when the item of the plant equipment has passed the tests, the Owner/Engineer shall furnish to the contractor a certificate in writing to that effect. The Quality Control Plan (QCP) shall be issued by the contractor within 1 months after NTP. Document files containing material certificates, test reports, etc shall be compiled for each QCP item of plant equipment; and shall be suitably identified (including equipment classification reference) and bound. Copies of compiled file shall be submitted as per distribution schedule

1.5 Tests at Manufacturers Works

The major equipment of the plant to be supplied under this contract shall be subjected to shop inspection and tests. After NTP, the contractor shall issue within 1 months a QCP indicating the kind and extent of inspection and tests to be carried out on the offered plant equipment components to prove whether the equipment fulfills the requirement of the contract in view of:

- Safety Conditions
- Consideration of the applied standards and regulations
- Execution of workmanship

SITE TESTS

Tests conducted at sites shall be indicated by bidder.

2.0 DEVIATIONS

Deviation from this specification, if any, shall be clearly brought out in the offer. Unless owner explicitly accepts such deviations, it shall be considered that the offer fully complies with the specification.

BSES Rajdhani Power Limited
BSES Bhawan, Nehru Place, New Delhi- 19

TECHNICAL SPECIFICATION

FOR

MISCELLANEOUS ACTIVITIES

Prepared by	Sonia Mittal		Rev: 0
Reviewed by	Uttam Shukla		Date: 21.11.2025
Approved by	Deepti Sharma		

Chapter 6b Technical Specification Misc Activities

1.0 SERVICE AFTER SALES

1.1 The bidder shall furnish in detail about his organization for rendering service after sales, covering deployment of personnel and supply of spares, for ensuring efficient operation and maintenance of the offered plant equipment. The details of spares and service facilities possessed by them should be elaborated.

1.2 The bidder shall guarantee furnishing of the following in respect of after sales services including spares:-

i) Providing services of his specialists on indent from the Owner for periodical or special maintenance of the plant; as well as for identifying sources of trouble, if any, reported and measures for immediate rectification.

ii) The bidder shall guarantee maintenance of adequate spares at his works to be supplied on indent from the Owner at short notice during the life of the plant.

2.0 BID DATA, DRAWINGS AND INFORMATION REQUIRED

2.1 Technical data sheets, drawings, schedules with supporting information incorporating the details in compliance to spec but not limited to the following shall be furnished along with the proposal:

2.2 Duly filled in 'Schedule of Guaranteed and other Technical Particulars Schedules ‘C’ except for data which cannot be finally furnished with the Bid. The Price and Delivery Schedule-B duly filled in.

2.3 Dimensioned outline drawings of the offered overall plant and separately for equipment including cross-sectional drawings showing dimensions, net weights, shipping weights and suggested arrangement layout of proposed plant & equipment with auxiliaries etc. Technical Literature/leaflets of the above plant equipment.

2.4 Manufacturers' catalogues showing the construction details of various equipments should be furnished indicating clearly the technical preference of the offered equipment over the specified equipment.

2.5 List of users of comparable plant equipment with the year in which the Diesel plant and other critical plant equipment was put actually into service. For technical acceptability of the bid, proven experience of the bidder in manufacture and satisfactory and trouble free performance of the critical plant equipment for at least three (3) years is essential for which the bidder shall furnish necessary documents in support of the above.

2.6 A bar chart of design, engineering, procurement, manufacture, testing, delivery, installation, commissioning and site testing including civil structural and architectural works of the proposed plant equipment.

2.7 Technical description of the proposed plant equipment and materials particularly outlining any additional list out features proposed for safety & reliability. List out items of work & services not included and which has to be provided by the Owner for satisfactory commissioning of the offered plant equipment supplied.

2.8 The bid shall not be considered if the bidder fails to submit all the details asked for. Proposal should be complete without ambiguity and should be clearly written against each item.

2.9 Bidder shall furnish Quality Assurance Programme for design, manufacture, assembly, erection, testing & commissioning including civil, structural and architectural works along with the proposal for all equipment covered under this specification whether manufactured by the bidder or procured from other sources.

2.10 Technical deviations from the specification, if any, shall be clearly listed in the Schedule-E. In absence of any deviation given in Schedule-E and accepted by Owner, it will be bidder's responsibility and his contractual obligation to supply the Plant equipment as per specification to Owner/Engineer's approval.

2.11 List of shop and site tests, the bidder proposes to carry out including those pertaining to their sub-suppliers works shall be clearly brought out in Schedule – G. In addition to above tests, the bidder shall conduct any other tests, to Owner/Engineer's approval, which are considered important for satisfactory operation of plant equipment.

2.12 Bidder shall furnish all required mandatory and startup commissioning spare parts as well as maintenance tools and tackles with unit prices for the offered plant equipment.

3.0 POST CONTRACT DATA AND DRAWINGS

3.1 The contractor shall submit within thirty (30) days from the date of the order and Notice to Proceed (NTP) certified dimensioned drawings and technical schedules giving every detail of the offered plant equipment particularly the following:

3.2 Completely filled in schedule of guaranteed particulars and other technical particulars.

3.3 Single line diagrams; logic diagrams, dimensioned general arrangement and equipment layout drawings showing front and side elevations, plan and sectional views of the offered equipment forming part of the contractor's supply; The drawings should also indicate structures & supporting details including foundation outline and loading data etc.

3.4 Final version of all drawings and data submitted along in the proposal mentioned above.

3.5 Structural, thermodynamic and pressure part calculations showing compliance with specifications and codes as and when required.

3.6 Any other drawings/details not specified herein and required by the Owner/Engineer to correctly coordinate the offered plant equipment with other contractor's work.

3.7 Civil design calculations.

3.8 Detailed specifications and data sheets of the plant equipment with auxiliaries.

3.9 Detail drawings of critical equipment units, assemblies, parts etc. as deemed necessary.

3.10 Design calculations of conductor sizing, cable sizing, main equipment sizing etc.

3.11 Schematic wiring diagrams along with write-ups for control, interlocks, instrumentation, protection, circuits. Terminal blocks and terminals arrangement drawings showing power & control cable connections.

3.12 Owner/Engineer will return to the contractor one (1) print of each drawing either.

(a) stamped approved or (b) marked up with the comments. In case of (a), no further submission of a drawing will be required. In case of (b), the contractor shall correct his original drawings to conform to comments made by the Owner/Engineer and resubmit within two (2) weeks of receipt of comments in the same manner as stated in the Distribution Schedule. The Owner/Engineer's approval shall not relieve the contractor from any of his obligation and responsibility to manufacture and supply equipment conforming to this specification, unless a written amendment to the specification is issued by the Owner.

3.13 After approval of the drawings, reproducible of each drawing shall be supplied. Final drawings shall be certified as Approved for Construction. Should any minor revision be made after approval the contractor shall re-distribute prints and reproducible as per the Distribution Schedule. Every revision shall be marked by a number, date and subject in a revision block provided in the drawing.

3.14 Reproducible shall be of quality to produce clear and legible prints and any inferior reproducible will be returned by the Owner for replacement with suitable reproducible. All reproducible shall be mailed rolled (not folded) on the outside of regular mailing tubes except for small sizes which can be mailed unfolded in envelope with a cardboard backing. The prints and reproducible shall be mailed in the most expeditious manner and shall be accompanied with a letter of transmittal.

4.0 INSTRUCTION MANUAL

4.1 At least one (1) month prior to the dispatch of the plant equipment, fifteen (15) copies of installation, testing and adjustments after installation, operation and maintenance manuals shall be furnished. These manuals shall be sturdily bound volumes and shall contain every drawings and information required for installation, testing, setting and adjustment of all components after installation, operation and maintenance of the equipment and all its components. Separate tabs shall be used for such instructions concerning each equipment control components, electrical and other accessories. The other data needed for servicing the components and ordering their spare parts.

4.2 Marked erection prints identifying the components parts of the equipment, as transported, with its assembly drawings.

4.3 Detailed dimensioned assembly and cross sectional drawings and description of all the plant system equipment with auxiliaries and drawings identifying all spare parts for re-order.

4.4 Documentation

Correspondence, drawings, progress reports, schedules, tests reports and instruction manuals shall be mailed in requisite copies in accordance with Distribution Schedule.

5.0 WORK SCHEDULE

5.1 Time being the essence of the proposal, preference will be given for the offers quoting earlier deliveries. The bidder shall include in his proposal his programme for furnishing and erecting the offered plant & equipment.

5.2 The programme shall be in the form of master network identifying the key phases in various areas of total plant work, such as design work, procurement of raw materials, manufacture of components & subassemblies; complete erection of equipment and all other field activities. The master network shall conform to completion of trial operation from the date of Letter of Award within a period of 4 months. The trial operations shall commence any day within 15 days prior to the date of completion indicated above.

5.3 This master network shall be discussed and agreed before the issue of letter of award. Engineering drawings as well as technical data sheets submission schedule shall also be discussed and finalized before the issue of letter of award. Provisions of the liquidated damages leviable for delays in completion of trial operation shall become effective after the above mentioned date.

5.4 After the contract award, the contractor shall plan the sequence of work of manufacture and erection including associated civil works to meet the Owner's power plant commissioning requirements; and shall ensure that all work/manufacture, shop testing, inspection & shipment of the equipment in accordance with the required construction/erection sequence.

5.5 Within seven (7) days of acceptance of the letter of award, the contractor shall submit, for review and approval, two copies (1 reproducible and 1 print) of Detailed Network schedules, based on the Master Network (mutually agreed by the Owner & contractor) to the Owner/Engineer showing the logic & duration of the activities in the following areas

i) Engineering, Procurement, Manufacturing & Supply Detailed engineering activities in regard to procurement of raw materials including bought out items, manufacture, dispatch/ shipment & receipt at site.

ii) Civil, Structural & Architectural Works:

Detailed engineering activities in regard to civil & structural works execution based on the offered equipment and approved drawings including detailed execution of execution activities covering the complete scope of work.

iii) Erection, Testing and Commissioning:

Detailed erection, testing and commissioning activities, covering the complete scope of work of the offered plant equipment coordinated with the civil and structural works executed.

5.6 Detailed Manufacturing Program

Detailed manufacturing PERT/PRIMAVERA programme for all the manufacturing activities of the offered plant equipment at contractor's/subcontractor's works shall be furnished within 7 days of letter of award.
The manufacturing network shall be supported by detailed procurement programme for critical bought out items/raw materials

Pre-erection Activity Programme
A) Manpower Deployment
B) Tools and plant mobilization plan
C) Detailed Site Mobilization Plan

5.7 Within a week of approval of the Network schedule, the contractor shall forward to the owner/Engineer copies of the Computer initial run data in an acceptable manner

5.8 The network shall be updated every month; or as frequency as possible to mutual agreement. Within seven (7) days following the monthly review, a progress meeting shall be held at the work (possible) wherein the major items of the plant or equipment are being produced. The meeting will be attended by the Owner/Engineer and responsible representatives of the contractor. The contractor shall be responsible for minuting the proceedings of the meeting, a report of which shall reach the Owner or the Owner/Engineer not later than 7 days following the meeting.

5.9 Access to the contractor's and/or sub-contractor's work shall be granted to the Owner/Engineer at all reasonable times for the purpose of ascertaining the progress

6.0 PROGRESS REPORTS

During execution of the contract either in manufacture or erection/commissioning, the contractor shall furnish monthly progress report to the Owner or the Owner/Engineer in a format as specified indicating the progress achieved during the month, and total progress upto the month as against scheduled and anticipated completion dates in respect of key phase of work or manufacture and shipment such as release of drawings for fabrication, procurement of raw materials, inspection and testing. If called for by the Owner/Engineer, the contractor shall also furnish to the Owner or the Owner/Engineer resources data in a specified format and time schedule. The contractor shall also furnish any other information necessary to ascertain progress if called for by the Owner/Engineer

Chapter 6b Technical Specification Misc Activities

7.0 DEVIATIONS

Deviation from this specification, if any, shall be clearly brought out in the offer. Unless owner explicitly accepts such deviations, it shall be considered that the offer fully complies with the specification.

BSES

Technical Specification

Of

Electrical Overhead Travelling (EOT) Crane

Specification no – BSES-TS-304-EOTCR-R0

Rev:		0
Date:		09 Oct 2025
Prepared by	Alok Mandal	
Reviewed by	Uttam Shukla	
Approved by	Deepti Sharma	

Contents

1.0 SCOPE 3
2.0 CODES AND STANDARDS 3
3.0 CYBER SECURITY 4
4.0 SCOPE OF SUPPLY ITEMS 6
5.0 TECHNICAL DETAILS 7
6.0 FEATURES 7
7.0 INSPECTION &TESTING 9
8.0 DRAWING AND DOCUMENTS 10
9.0 TRANSPORTATION EQUIPMENT AT SITE 11
10.0 PACKING, STORING AND UNPACKING 11

1.0 SCOPE

- This specification applies to the design, engineering, manufacturing/fabrication, assembly, inspection, testing before dispatch, packing, forwarding, supply and delivery at destination by suitable transport, unloading at site, installation and commissioning of indoor EOT crane on Turnkey basis and as specified in the following sections of this document.

2.0 CODES AND STANDARDS

Sl no.	Heading	Function Description
2.1	IS:325-1978	3-Phase induction motors (fourth revision)
2.2	IS:807-2006	Code of practice for design, manufacture, erection and testing (structural portion) of cranes and hoists.
2.3	IS: 2062-1992	Specification for structural steel (fusion welding quality)
2.4	IS:2266-1989	Steel wire ropes for general engineering purposes
2.5	IS:3177- 1999	Code of practice for electric overhead travelling cranes and gantry cranes other than steel work cranes.
2.6	IS:I3947(Part-1)-1993	Low voltage switches and control gear PI-general rules
2.7	IS:I3947(Part-4, Section-1) -1993	Low voltage switchgear and control gear P-4 - contactors and indoor starters sec 1, electromechanical contactors and motor starters (superseding IS:2959 and IS:8544 – all parts)
2.8	IEE:C37.24-2018	Standard for Power System Relaying terms and definitions.
2.9	IEEE:C37.90-2005	All Protection Trip Relays.
2.10	IEEE:C37.112-2010	Guide for relay application in power systems.
2.11	IS:9000 part1-1998	Basic environmental testing procedures for electronics & electrical items.
2.12	IEEE:80	Guide for Safety in AC Substation Design.
2.13	IS:13703 - 1993	Low voltage fuses for voltages not exceeding 1000V AC or 1500V DC.
2.14	IEC:60629	Low Voltage fuses.
2.15	IEC:60282	High Voltage fuses.
2.16	IS:9244(part3) / IS:13703	HRC fuses.
2.17	IS:694	PVC insulated cables for working voltages upto and including 1100V.
2.18	IS:722	AC Electricity meters.
2.19	IEC:61850	Communication Networks and Systems in substations.
2.20	IEC:60529	Degrees of Protection provided by Enclosures.
2.21	IS:2982	Copper conductor in insulated cables.

2.22	IS:3961 (part1-part5)	Current rating for cables.
2.23	IS:5831	PVC insulating and sheath of electrical cables.
2.24	IS:375	Auxiliary wirings.
2.25	IS:1248	Indicating instruments and other applicable standards.
2.26	IEC:62351	Cyber Security type tests of IEDs/Numerical relays/Gateways/Transformer Tap controllers/Changers, etc with IEC 61850, IEC101, IEC103, IEC104 communication protocol network systems.
2.27	IEC:27036 IEC:20243 IEC:62443	Supply Electrical Devices from outside India, type tests for communications, cyber security conformance tests.
2.28	IEC:60973	OFC used for various equipments& panels located in AC/DC Switchyards, Control rooms, valve halls to transmit the required signals for integration, control, monitor, etc.

3.0 CYBER SECURITY

Sl no	Heading	Function description
3.1	Reference Standards	IEC:61850 – 5 to 10, IEC:27036, IEC:20243, IEC:62443, IEC:62351 and other relevant standards of IS/IEC/ANSI/IEEE,etc must be incorporated and Rules & Standards of Govt. of India, Ministry of Power/Other Central, State Departments & International best practice on Cyber security in Electrical Power Systems.
3.2	Policy	The documented type test & conformance valid parameters for a set of business rules and process for protecting information, computer resources, networks, devices, electrical/electronic programmable devices, software's, industrial control systems and other Information Technology (IT) / Operation Technology (OT) systems shall be used to protect a sensitive & critical infrastructure of Electrical Power generation, transmission, distribution in protections, control operations, measurements, monitoring purposes.
3.3	Cyber Security Threats, Violations, Incidents, Unauthorized access on Power System ITs/OTs.	Cyber security violation/incident occurs by unauthorized or illegitimate accessor a person, group of persons, entity, of data, applications, services, networks and/or devices through bypass of the underlying cyber security protocols, policies and mechanisms resulting in the compromise of the confidentiality, integrity or availability of data/information maintained in a computer resource, protection equipment's, protection devices, sensors, meter devices, mechanism, automation, RTUs, PLCs, SCADA

		and other connected within respective electrical utilities & organizations.
3.4	Cyber Security systems	The cyber security of electrical power systems/ networks shall be available to protect the security, integrity and reliability. The protection of IED's/other Electric/Electronic devices information (or data's) against unauthorized or destruction whether accidental or intentional.
3.5	Critical Assets	The critical assets shall be of system, equipments and facilities which, if destroyed, degraded or otherwise declared unavailable, would affect the reliability or operability of the electrical power system.
3.6	Type test reports IEC:62443, IEC:62351 (India made devices)	The IEDs, RTU, FRTUs, PLCs, SCADA, Communication network switches, any related programmable software's/hardware's, etc systems that involved in electrical power sector for control & monitoring critical information shall be verified for a sample size for testing minimum one number from each make, type and having same firmware version for the supply one lot size of 200 numbers or less.
3.7	Type test reports IEC:62443, IEC:62351 (India made devices)	The Smart meters, other energy meters the sample six for testing shall be minimum one number for each make, type and have same firmware version for the supply one lot size of 5000 numbers or less.
3.8	Type test reports IEC:27036 IEC:62443 IEC:62351 IEC:20243 (Other country made devices)	The IEDs, RTU, FRTUs, PLCs, SCADA, Meters, Communication network switches, any related programmable software's/hardware's, etc systems that involved in electrical power sector for control & monitoring critical information for importing products/system shall be verified for a sample size 5% of the supply lot for each make, type and having same firmware version for the supply lot.
3.9	Protection & Control devices, Network & Programmable devices of substation equipment's	The IEDs, Communication Networks related devices, Software's, Hardware's in relation of critical electrical equipment which ever transfer data files, control & monitoring data files within power sector, state utilities for reliable power sector, which is a strategic & critical sector.
3.10	RTU domain cyber security terms & conditions	As the RTU/SCADA system will use public domain, such as LAN/VSAT/GPRS/CDMA/SATELLITE Based networks for communication media, therefore it is mandatory to guard the data / equipment from intrusion/damage/breach of security & shall have SSL/VPN based security.
3.11	IED'S like Protection devices, Control devices.	Communication protocol conformance standards shall be followed as per IEC 61850-5 to IEC 61850-10 and respective clauses.
3.12	RTUs,FRTUs,SCADA, PLC, etc with IEC communications.	Communication protocol conformance standards shall be followed as per IEC:60870-5-101/ IEC:60870-5-103/ IEC: 60870-5-104 and respective clauses.

3.13		Protocol Security conformance standards shall be followed as per IEC:60870-7, IEC:62351-100 part1&3 and respective clauses.
3.14	Smart meters with IEC 62056	Protocol Security conformance & Communication protocol conformance standards shall be followed as per IS:15959 series, IS:16444 series and respective clauses.
3.15	Mandatory tests case	The test is referencing a clause that is mandatory in IEC: TS 62351-5, IEC: TS 60870-5, IEC: 62351-3 which defines the requirements related to the authentication/encryption protocol, procedures and methods to be implemented at Fiber, TCP/IP(transport) level, Modbus,etc.
3.16	Approved/ Designated Laboratories	Central Power Research Institute (CPRI) approved laboratory for IEDs, RTU, FRTUs, SCADA, PLC systems. Central Power Research Institute (CPRI) Electrical Research & Development Association (ERDA), Yadav Measurements Pvt Ltd(YMPL) for Smart meter devices. If any other departments if approved shall be as per Ministry of Power/Other related departments for confirmation of Cyber security in power systems. If any changes according to Govt.rules/notifications/MoP,etc the same shall be incorporated time to time without cost implications.
3.17	Miscellaneous	Words and expressions used and not identified in these above regulations but defined in the information technology Act 2000 and the Electricity Act, 2003 shall be followed for cyber security of power system time to time.
3.18	Certificates Validity	Product certifications/type test reports of any Electrical/Electronic devices connected in power systems for respective protection/functions/controls/monitoring shall not be older than 5 years during supply of same items.
3.19	Reports	All necessary type test reports, certifications shall be submitted for RTU panel/ Equipments at Pre Bid / Engineering/ Inspection by supplier/vendor.
3.20	RTU Processor	RTU Processor with enhanced cyber security features, SNMPv3, https, SSL and TLS based encryption for 104 communication and shall comply with IEC 62351-3, IEC 62443-4-1, IEC62443-4-2 std for cyber security requirements for Industrial OT system.

4.0 SCOPE OF SUPPLY ITEMS

Sl no.	Function Description
4.1	**The EOT cranes will consist of the following major components:**
4.1.1	Single Girder
4.1.2	Trolley Frame

4.1.3	Brakes
4.1.4	Wheels and rails
4.1.5	Hooks (main/auxiliary) and hoist rope
4.1.6	Operator's cabine/radio control
4.1.7	Conductors
4.1.8	AC Motor
4.1.9	Shrouded down shop leads (DSL) with maintenance cage
4.1.10	Control panel

5.0 TECHNICAL DETAILS

The girder will be of box type construction and will ensure that water/oil do not accumulate inside the box. The trolley frame will be fabricated from rolled sections/steel plates. The main hoist, auxiliary hoist, cross travel trolley, and long travel trolley of the crane will be motor driven. The structural portion of the EOT crane will be designed to meet the requirements of Class II of IS 807 (Indian Standard). The EOT crane will be designed (other than the structural steel portion) to meet the requirements of Class M5 of IS 3177.

Sideward approaches from the operating floor level to the rail level will be provided in both rows for access to the bridge. Safe means of access will be provided in the cabin and other areas of the crane where maintenance of any equipment or component is involved. A platform will extend the full length of the crane bridge on both sides of the bridge girder
The EOT crane will have a permanent inscription in English and Hindi on each side, readily visible from the operating floor level, stating the safe working loads in metric tons for both the hooks, the year of manufacture, crane serial number, and manufacturer's name.

6.0 FEATURES

Sl no.	Function Description
6.1	The EOT crane will be of double girder, bridge type.
6.2	Access to EOT Crane shall be provided with Caged Ladder inside control room.
6.3	A permanent cage ladder with steel grating platform all along the length of the room between side wall and main beam which has power tapping DSL.
6.4	Safety Railing on EOT Crane for maintenance.
6.5	The EOT crane shall be designed for lifting 25% more than the heaviest piece of equipment (detailed calculation shall be submitted by Vendor for approval), However minimum capacity shall not be less than 5 Ton.

6.6	Steel will be of tested quality steel conforming to IS 2062 (Grade B).
6.7	Handrails will be of galvanized steel pipe of flush welded construction, ground smooth using 32 mm.Nominal bore medium class pipe conforming to IS 1239 (Part II).
6.8	The wheels and rails act as a guide for EOT cranes to provide smooth and linear motion.
6.9	The crane panel will have two incoming supplies. The two isolators will have mechanical interlock(through Castell key) to prevent simultaneous closing of the two isolators.
6.10	Electrical motors will be selected with an S4 duty, a 25 percent cycle duty factor, and 150 starts per hour.
6.11	Speed of the hoist shall be 3-4 meter per min and the creep speed through DCEM clutch and pony geared motor shall be maximum 0.5 meter per min.
6.12	The height of lift and length of long travel shall be in accordance to the GIS room.
6.13	The end carriage & Trolley frame shall be fabricated with MS Rolled channels andMS plates; suitable stiffeners and diaphragms shall also be provided.
6.14	Antiskid skid chequered plate with suitable maintenance platform for Hoist Block and long travel drive shall be provided. Sufficiently wide full length walk way with hand railing should be provided on the girder. Drawing &all other related document is to be approved from the user Dept.
6.15	Totally enclosed helical splashed oil bath lubricated gear box shall be used for all motion. All gear & pinion shall be hardened and tempered alloy steel having metric module machine cut teeth. The housing shall be graded cast iron / cast steel or fabricated from steel plates. Fabricated housing shall be stress relieved before the machining. The gear box shall be oil tight and fitted with oil level indicator, breather plug, inspection cover and oil drain out plug. The internal surface of gearbox shall be painted with oil resistant type paint.
6.16	Rope drum shall be fabricated form rolled steel plates or seamless tube. Fabricated rope drum shall be stress relieved before machining. The rope drum shall be designed for single layer of rope; the helical groove shall be smooth finished.
6.17	Wire rope shall be regular right hand lay fiber core as per IS: 2266. The construction of wire rope shall be 6X36 constructions. The factor of safety shall be 6 minimum. Rope sheaves shall be graded cast iron. The rope sheaves shall be mounted on anti-friction bearing.
6.18	Lifting hook shall be single point with shank as per IS: 3815. The hook shall be mounted on anti-friction thrust bearing which shall be enclosed by protective skirt for360° smooth swivelling of the load on the hook. The block sheaves · shall be fully encased in close fitting guards fabricated out of steel plate. Smooth opening shall be provided in the guard to allow free movement of rope. Hook block should be tested and certified with proof load from Govt. accredited testing authorities. Test certificates for lifting hook shall be furnished during the supply.
6.19	All electrical motors shall be totally enclosed fan cooled, S4 Duty, Squirrel Cage Induction Motor. The starting motion of all travel shall be jerking free. Suitable starting arrangement shall be provided for all LT motor to reduce the starting current to achieve smooth starting and thereby jerk free operation in all motions of the crane. Motor shaft shall be connected to the gear box through gear type

	flexible coupling.
6.20	Pendent push button shall be suspended from crane by link chain so that no undue stress can come on the cables. · The Push button station shall be independently movable. Separate cable track with cable trolley etc. shall be provided for the push button station. The unit shall comprise of push button marked as follows and 1no Indication lamp for control of indication:
6.20.1	Start
6.20.2	Emergency Stop
6.20.3	Up (hoist)
6.20.4	Down (lower)
6.20.5	Slow Down
6.20.6	Slow Up
6.20.7	Left – CT
6.20.8	Right – CT
6.20.9	Forward – LT
6.20.10	Reverse – LT
6.21	The unit shall comprise incoming ACB / MCCB with positive isolation contactor, line chock, three phase diode bridge rectifier acting as line converter and three phase inverter as load converter interconnected through DC link reactor and capacitor unit.

7.0 INSPECTION &TESTING

The crane supplier shall put up the crane for inspection at his Works as well as at site and the following tests shall be carried out by him in the presence of the Purchaser or his authorised representatives.

7.1	All the dimensions of the crane shall be checked as per the approved general arrangement drawings. Diagonal measurement of the crane and trolley shall also be carried out in the fabrication shops before dispatch to site.
7.2	The deflection of the bridge girders shall not exceed 1/1000 of span with the fully loaded trolley stationed at mid-span with safe working load at rest. The measurement shall not be taken on the first application of the load. The datum line for measuring the deflection should be obtained by placing the unloaded trolley at the extreme end of the crane span.
7.3	The girders shall be tested for permanent set by applying 125% of the safe working load when the trolley is stationed at mid-span. At the end of the test there shall be no sign of permanent set of the girders.

7.4	Height of lift shall be checked by measuring the length of hook travel from its topmost position to the bottom-most position and this shall not be less than the lift specified.
7.5	All the motions of the crane shall be tested with rated load and the rated speeds shall be attained within the tolerance limits.
7.6	All the motions of the crane shall be tested with 25% overload in which case the rated speeds need not be attained but the crane shall show itself capable of dealing with the overload without difficulty.
7.7	For checking the performance of the hoist motion the speed at each notch of the master controller with different loads both during hoisting and lowering shall be found out and the load/ speed characteristics shall tally with the speed/torques graph submitted.
7.8	For the performance of long travel and cross travel motions, the crane shall be tested with rated load and the running time for a particular distance shall be as per the acceleration values specified.
7.9	The hoist brakes shall be tested so as to enable to brake the movement under all conditions without any jerk on the load. The brakes shall also be tested with overload condition.
7.10	The long and cross travel brakes shall be capable of arresting the motion within a distance in meters equal to 10% of the rated speed in meters/minute
7.11	Limit switches for all the motions shall be tested for their proper operation and shall be set right so as to obtain the required hook approaches and lifting height.
7.12	Insulation and other tests as per applicable codes shall be carried out.
7.13	Trolley frames shall be designed in accordance with applicable sections of IS 2062/IS 12075.
7.14	The main function of the trolley frames is to provide rigid support and strength to the EOT cranes to carry a load from one place to another.
7.15	The trolley frame will be fabricated from rolled sections/steel plates. End carriages will be of weldedConstruction. Mountings will be designed to facilitate easy removal of the wheels, bearings, and journals for quick and easy maintenance. Wheel or wheel end carriage mountings will be complete with safety pads to prevent an accidental drop of more than 25 mm. Jack pads will also be provided on the trolley and bridge wheel mounting structural frames for the removal of wheels.

8.0 DRAWING AND DOCUMENTS

Following drawings are to be submitted for scrutiny and approval

8.1	The detailed general arrangement drawing containing all basic dimensions and vital particulars of the crane. These drawings should indicate the main specification, number and location of joints provided on the girder plates, CT rails etc. structural calculation, drawings of main load carrying members, if asked for by Purchaser.

8.2	General arrangement drawing of the trolley.
8.3	Motor power &brake selection calculation.
8.4	Cabin layout drawing showing location and mounting of all equipment.
8.5	Control equipment supplier's schematic control circuit diagrams for individual drives along with speed-torque characteristics and explanatory notes.
8.6	General arrangement drawing for control panel with sections.

9.0 TRANSPORTATION EQUIPMENT AT SITE

The contractor shall be responsible for the loading, transport, handling and offloading of all equipment and materials from the place of manufacture or supply to site. The contractor shall be responsible to select and verify the route, mode of transportation and make all necessary arrangement with the appropriate authorities as well as determining any transport restrictions and regulations imposed by the government and other local authorities.

10.0 PACKING, STORING AND UNPACKING

All the equipment shall be carefully packed for transport in such a manner that it is protected against the climatic conditions and the variations in such conditions that will be encountered enroute from the manufacturer’s works to the site.

BSES

Technical Specification

Of

Cable Seal Solution

Specification no – BSES-TS-302-CABSE-R0

Rev:		0
Date:		09 Oct 2025
Prepared by	Amar Deep Singh	
Reviewed by	Uttam Shukla	
Approved by	Deepti Sharma	

# #

Index

1.0 Scope
2.0 Basic Features
3.0 Service Conditions
4.0 System Design
5.0 Installation, Testing and Commissioning
6.0 Maintenance
7.0 Approved Makes.
8.0 Drawing and Data submission
9.0 Shipping
10.0 Handling and Storage
11.0 Quality
12.0 Deviation
13.0 Testing and Inspection
14.0 Training

1.0. SCOPE:

This specification covers design, engineering, manufacture, assembly, stage testing, inspection & testing before supply & delivery at site and installation testing and commissioning including handover the system to BRPL after successful execution of Cable Seal Solution
This Scope includes the following

a) Supply of Cable Seal System including its transportation to BRPL Site
b) Installation testing commissioning of Cable seal solutions with all the accessories including minor civil work if any.

2.0. Basic Features:

Following requirements shall be fulfilled and supported with valid test reports/certificates:

1. Minimum IP 65 Protection level Certificate for protection from Dust and Water.
2. Heat sink test report of Cable transit system.
3. Certificate/ Test Report for Protection from Rats and Rodents.
4. ATEX, PESO Approval for Explosive atmosphere.
5. NEMA Certificate as per UL 508A for the safety of Cabinets & Enclosures mandatory.
6. Material of Frame shall be of Stainless Steel.
7. System must have Bonding & grounding (Armour Earthing) feature as per IS 3043-1987 using a suitable Tin Plated Copper Braid to be used wherever required. It should be also tested for Impulse withstands as per IEC 62305-1 for minimum 50kA for 1 sec.
8. Manufacturer should have direct presence in India with all the after Sale & Service support from last 10 years.
9. Cable sealing system should have been tested for F- Rating Fire for 3 hrs as per UL 1479/ EN, Insulation and Integrity for 120 mins as mentioned in Indian National Building Code(EI 120) Certificate from BS 476 are mandatory.
10. Cable sealing system should have been tested for GAS tightness of 2.5 bar pressure.
11. EPDM modules in System must have Halogen content less than 200ppm with low smoke index-F1 Classification as per NF16-101 & NF16-102, Heat Radiation test in compliance with M2 classification, UV Ageing Test as per ISO-4892-2:2006 & ISO-815- 1:2008, Oxygen Index Test as per ASTM D 2863-00, Shock & Vibration Test as per NES 510.
12. System must have Bonding & grounding (ArmourEarthing) feature as per IS 3043-1987 using a suitable Tin Plated Copper Braid to be used wherever required. It should be also tested for Impulse withstand as per IEC 62305-1 for minimum 50kA for 1 sec.
13. Smoke Index shall be low. Type test reports for the same shall be provided by the supplier.
14. Shelf life of module - 25 Years
15. Solubility – Insoluble in water.

3.0. SERVICE CONDITIONS:

S.No	Particulars	Data
1	Design Ambient temperature	0°C to 50 °C
2	Seismic Condition	Zone IV as per IS 1893
3	Wind Pressure	195 kg/M² upto elevation of 30 M as per IS 875
4	Maximum Relative Humidity	100%
5	Maximum Altitude above Sea level	1000M
6	Rainfall	750mm (concentrated in 4 months)
7	Pollution level	Heavy/Dry
8	Average of no thunderstorm days	40 per annum

4.0. SYSTEM DESIGN

1. Modules with concentric peel able/removable layered multi-diameter cable sealing system consisting of frames, blocks and accessories shall be installed where the cables enter or leave any type of Electrical Panel/Cabinet/Transformer cable box.Each concentric module shall have a minimum of 10 mm range between smallest and largest adaptable diameter. System should be designed with minimum **+/-** 3 mm design margin. System should have provision for usable spares of 30**%** with no loose/ hanging / add layer / plug in type or to be stored components of modules / seals, each spare module should be concentric peelable/removable multi-diameter layered with complete range installed on Frame and solid Block are not acceptable..

2. It Shall cover following openings

   For all Cable entry from outside to control room building and between room to room

5.0. MAINTENANCE

Bidder shall furnish a maintenance manual and support maintenance activity.

6.0. APPROVED MAKES

Roxtec, MCT Brattberg, UGA Systems

7.0. APPROVED MAKES

8.1	Submissions along with the bid	
8.1.1	Duly filled GTP and copy of	2 copies + 1 soft copy

	specification	

8.0. SHIPPING

9.1	Shipping	The bidder shall ascertain at an early date and definitely before the commencement of manufacture, any transport limitations such as weights, dimensions, road culverts, Overhead lines, free access etc. from the Manufacturing plant to the project site. Bidder shall furnish the confirmation that the proposed Packages can be safely transported, as normal or oversize packages, up to the site. Any modifications required in the infrastructure and cost thereof in this connection shall be brought to the notice of the Purchaser.
		The Bidder shall be responsible for all transit damage due to improper packing.

9.0. HANDLING AND STORAGE

10.0	Handling and Storage	Manufacturer instruction shall be followed. Detail handling & storage instruction sheet / manual needs to be furnished before commencement of supply.

10.0. QUALITY

11.1	Vendor quality plan	To be submitted for purchaser approval
11.2	Inspection points	To be mutually identified & agreed in quality plan

11.0. DEVIATION

12.1	Deviation	Deviations from this Specification shall be stated in writing with the tender by reference to the Specification clause/GTP/Drawing and a description of the alternative offer. In absence of such a statement, it will be assumed that

		the bidder complies fully with this specification. No deviation will be acceptable post order.

12.0. TESTING AND INSPECTION

Shall be as per latest relevant standards

13.0. TRAINING

Training on installation, commissioning, operation and maintenance shall be included in the proposal.

- at factory/site- 1 Manday

TECHNICAL SPECIFICATIONS

OF

INSULATING MAT

BSES RAJDHANI POWER LTD.				
Prepared by	Naved Ahmad	Naved Ahmad 15/5/18	Date:	15.05.2018
Reviewed by	Amit Tomar		Revision	R0
Approved by	K. Sheshadri	15/05/18	No of Pages:	8

Contents

1.0 Scope of Supply....3
2.0 Service Condition....3
3.0 Applicable Standards....4
4.0 Requirements....4
ANNEXURE A-TECHNICAL COMPARISON DATA SHEET FOR INSULATION Mat-11 kV....4
5.0 Workmanship And Finish:....8
8. Inspection:....8
9. Deviation....8

1.0 Scope of Supply

1.1 The specification covers the design, manufacturing, inspection, testing & supply of safety helmet with sensor

1.2 Design, Engineering, Manufacturer, Assembly, Inspection, testing at manufacturer works before dispatch Packing, delivery of material to BRPL stores and submission of documents to purchaser.

2.0 Service Condition

The Insulating Mat to be supplied against this specification shall be suitable for satisfactory continuous operation under outdoor environment. Following are the climatic condition:

Sl.no	Parameters	Requirements
i.	Peak ambient temp.	55°C
ii.	Min ambient temp. in shade	45°C
iii.	Max. average ambient temp in 24 hours period in shade	40°C
iv	Min ambient temp.	(-)5°C
v	Max. temp. attainable by an object exposed to sun	70°C
vi	Max. relative humidity	95%
vii	Average number of thunder storm days per annum	40
viii	Average number of rainy storm days per annum	120
ix	Average annual rainfall	1250mm
x	No of months of tropical monsoon condition	4 months
xi	Max. wind pressure	150kg/m2
xii	Altitudes	Not exceeding 1000mtrs

The Insulating Mat shall also be for use in moderately hot and humid tropical climate, conducive to rust and fungus growth.

3.0 Applicable Standards

Following Indian/International Standards, which shall mean latest revision, with amendments/changes adopted and published, unless specifically stated otherwise in the Specification, shall be referred while accessing conformity of Lineman safety helmets with sensor

In the event of supply of insulating mat confirming to Standards other then specified, the bidder shall confirm in his bid that these standards are equivalent or better to those specified. In case of award, salient features of comparison between the standards proposed by the bidder and those specified in this document will be provided by the supplier to establish equivalence.

Sl. no.	Product name	Standard	Title
1	Insulating Mat	IS 15652 : 2006	Synthetic **Insulating Mat**- Confirming
2		IS 5424 (cold standard)	superseded the rubber **mat**
3		IS 8002/IEC 61111	
4		IEC 479	

4.0 Requirements

ANNEXURE A-TECHNICAL COMPARISON DATA SHEET FOR INSULATION Mat-11 kV

Annexure A-Technical Comparison Data Sheet For Insulation Mat-11 Kv			
Sl No.	Descriptions	BRPL Requirement	Vendor Data
1	Purchase Req. No		
2	Guarantee Period (Min)	5 years	
3	Applicable IS/IEC Standard to be followed by Vendor	IS 15652:2006, IS 8002/IEC 61111, IEC 479	

Annexure A-Technical Comparison Data Sheet For Insulation Mat-11 Kv			
Sl No.	Descriptions	BRPL Requirement	Vendor Data
4	Make	Vendor Name	
5	Material	Dielectric Elastomer	
6	Colour	Blue/Black	
7	Type	Pastable Type, gas welding with filler material type (IS:8002)	
8	Surface	Abrasions to be provided on upper surface to mat to make surface Anti-skid	
9	Voltage Grade	3.3 KV, 11 KV, 33 KV	
10	Suitable for AC/DC	AC/DC	
11	Thickness	3 mm for 11KV & 33 KV	
12	Width	1 mtr. (min)	
13	Length	5 mtrs for 11/33 KV	
14	Tensile Strength (N/Sqmm)	15 N/Sqmm upto 33 KV	
15	Elongation (%)	250 (min) upto 33 KV	
16	Insulation Resistance with Water at 500 V	1,000,000 M ohm up to 33 KV	
17	Leakage Current at 11 KV (mAmp)	10 (max)	
18	AC Di Electric Strength	45 KV (min) for 11KV	
19	Flame Retardance	Fire Retardant, fire self-extinguish within 5 seconds	
20	Working Temparature	-10°C to +60°C.	

Annexure A-Technical Comparison Data Sheet For Insulation Mat-11 Kv			
Sl No.	Descriptions	BRPL Requirement	Vendor Data
21	Low Temperature Resistamce	No Tear, Break or Crack is Observed in Mats Under Force of 100 N for 1 Hrs. at -10+- 3°C	
22	Effect to Various Medium		
a	Acid		
i	Tensile Strength (N/Sqmm)	Not Less than 80% of Changes from Original Value	
ii	Elongation (%)	Not Less than 80% of Changes from Original Value	
b	Alkali		
i	Tensile Strength (N/Sqmm)	Not Less than 80% of Changes from Original Value	
ii	Elongation (%)	Not Less than 80% of Changes from Original Value	
c	Diesel		
i	Tensile Strength (N/Sqmm)	Not Less than 80% of Changes from Original Value	
ii	Elongation (%)	Not Less than 80% of Changes from Original Value	
d	Transformer Oil		
i	Tensile Strength (N/Sqmm)	Not Less than 80% of Changes from Original Value	
ii	Elongation (%)	Not Less than 80% of Changes from Original Value	
e	Ageing Properties at 70+-1 °C for 168 Hrs		
i	Tensile Strength (N/Sqmm) after Ageing	Not Less than 75%of Changes from Original Value	
ii	Elongation (%) after Ageing	Not Less than 75% of Changes from Original Value	

Annexure A-Technical Comparison Data Sheet For Insulation Mat-11 Kv			
Sl No.	Descriptions	BRPL Requirement	Vendor Data
23	Class-C for 3 mm thickness		
i	Working Voltage	11 KV	
ii	Proof Voltage (for 180 sec)	36 KV max	
ii	Break Down Votage	65 KV (max) AC RMS	
24	Embossing	Anti-Skid without metallic derivatives with Chips/without Chips.	
25	Marking	Every meter of mat should be marked with respective Class symbol, Lot No. or Batch number and Manufacturer's Identity or Brand name, Mat Tested & Stamped to IS:15652-06 and ISI mark, BSES Mark, PO no, date of manufacturing, Length of Mat.	
26	Packing	Packed in Gunny bags of Jute/Hessian cloth to avoid mechanical damage to the material in transit.	

5.0 Workmanship And Finish:

One side plain and other side pattern.

6. Inspection:

Manufacturer shall intimate the manufacturing schedule in advance. The manufacturer shall give minimum 15 days advance notice about readiness of material at their works. The material shall be inspected for conformity with BRPL specification before the same is accepted.

8.1 Certificates required
8.2 Manufacturing certificates
8.3 Test certificates
8.3 Authorization of dealership/ distribution ship

7. Deviation

Deviation from this specification is only acceptable in cases where the bidder has submitted deviation list along with the technical bid. It may also be noted that the deviation can only be accepted by BRPL in case it does not hamper the basic purpose of safety helmets with sensor

In the absence of a list of deviations, it will be assumed by Buyer that the seller complies fully with this specification.

BSES

Technical Specification

Of

Conventional Oil filled Distribution Transformer

Specification no – BSES-TS-12-TRDU-R0

Rev:		0
Date:		01 Apr 2022
Prepared by	Vani Sood / Pronab Bairagi	
	Abhishek Harsh	
Reviewed by	Srinivas Gopu	
	Amit Tomar	
Approved by	Gaurav Sharma	
	K. Sheshadri	

INDEX

Record of Revision....3

1.0 Scope of Supply....4

2.0 Codes & standards....4

4.0 Construction & Design....10

5.0 Fittings and Accessories on Transformer....24

6.0 Approved make of components....28

7.0 Quality assurance....28

8.0 Progress Reporting....30

9.0 Inspection & testing....30

10.0 Packing , Shipping, Handling and Storage....37

11.0 Deviations....38

12.0 Drawings& Data Submission Matrix....38

Annexure A Scope of supply....40

Annexure B Service Conditions....41

Annexure C Technical Particulars of transformer oil....43

Annexure D Manufacturing Quality Assurance Plan....45

Schedule A Guaranteed Technical Particulars (Data by Seller)....70

Schedule B Guaranteed Technical Particulars of Transformer Oil....79

Schedule C Recommended Spares (Data by Seller)....82

Record of Revision

SI No.	Revision No	Item/Clause No.	Nature of change	Approved by

1.0 Scope of Supply

For scope of supply, refer annexure – A.

2.0 Codes & standards

a) Materials, equipment and methods used in the manufacture of Transformer shall conform to the latest edition of below mentioned standards.

b) Vendor shall possess valid BIS Certification.

IS 1180	Outdoor type oil immersed distribution transformer upto and including 2.5MVA,33kV
IS 2026	Power Transformers
IS 2026-4	Terminal Marking, tappings and Connections for Power Transformers.
IS:3347	Dimensions for Porcelain Transformer bushing
IS:3637	Gas operated relays
IS:3639	Fitting & Accessories for power transformers
IS:4201	Application guide for CT's
IS:8478	Application guide for On-load tap changer
IS:10028	Code of practice for selection, installation & maintenance of transformers
IS 5561	Electrical Power Connectors
IS 5	Colors for ready mix paints
IS:335	Insulating oil
IS 6272	Industrial cooling fans
IS 12615	Three phase induction motors
IS/IEC 60034	Rotating Electrical Machines. (e.g. For Cooler Fan Motors.)
IS/IEC 60071	Co-ordination of Insulation.
IS 16227/IEC 61869	Current Transformers.
IS 8468/ IEC 60214	On Load Tap Changers
IS2026-7/IEC 60076-7	Loading Guide for Oil-Immersed Power Transformers.
IS 2026-8 /IEC 60076-8	Application Guide for Power Transformers.
IS 2026-10/IEC 60076-10	Determination of Transformer Sound Levels.

IS/IEC 60529	Degrees of Protection Provided by Enclosures (IP Code).
IS/IEC 60947	Low-Voltage Switchgear and Control gear.
IS/IEC 60137	Bushing for alternating voltage above 1000V
IS:1271/IEC 60085	Thermal evaluation and classification of electrical insulation
IEC 60076	Power transformers.
IEC 60156	Method for Determination of the Electric Strength for Insulating Oils.
IEC 60296	Specification for Unused Mineral Insulating Oils for Transformers and Switchgear.
IEC 60445	Basic& Safety principles for man-machine interface, marking and identification, Identification of Equipment Terminals and conductor terminals
BS 148	Determination of Transformer and Reactor Sound Levels.
BS 223	Application Guide for Power Transformers.
BS 2562	Terminal and Tapping Markings for Power Transformers.
	Indian Electricity Rules
	Indian Electricity Act
	CBIP manual

In the event of direct conflict between various order documents, the precedence of authority of documents shall be as follows -

i. Guaranteed Technical Particulars (GTP)

ii. This Specification

iii Indian Standards / IEC standards

iv Approved Vendor Drawings

iv. Other documents

3.0 Major Design Criteria & Parameters of the Transformer

Sr No	Description	Data by purchaser
3.1	Voltage variation on supply side	+ / - 10 %
3.2	Frequency variation on supply side	+/ - 5 %
3.3	Transient condition	- 20 % or + 10 % combined variation of voltage and frequency
3.4	Service Condition	Refer Annexure B

3.5	Insulation level	Class A
3.6	Location of equipment	Generally Outdoor but may be located indoor also with poor ventilation
3.7	Reference design ambient temperature	50 deg C
3.8	Type	Oil immersed, core type, step down
3.9	Type of cooling	ONAN
3.10	Reference standard	IS 2026/IS 1180
3.11	No. of phases	3
3.12	No. of windings per phase	2
3.13	Rated frequency (Hz)	50 Hz
3.14	Highest system voltage HV side	12 kV
3.15	Highest system voltage LV side	460 volt
3.16	Lightning Impulse withstand voltage , kV peak	
3.16.1	For nominal system voltage of 11 kV	75
3.17	Power Frequency Withstand Voltage kV rms	
3.17.1	For nominal system voltage of 11 kV	28
3.17.2	For nominal system voltage of 415 V	3
3.18	Clearances Phase to Phase , mm	
3.18.1	For nominal system voltage of 11 kV	180
3.18.2	For nominal system voltage of 415 V	25
3.19	Clearances Phase to Earth , mm	
3.19.1	For nominal system voltage of 11 kV	120
3.19.2	For nominal system voltage of 415 V	25
3.20	System Fault Level , HV side	350 MVA
3.21	System Fault Level , LV side	35 MVA
3.22	System earthing	
3.22.1	HV	Solidly earthed
3.22.2	LV	Solidly earthed
3.23	Ratings	250/400/630/1000/1600/2000 kVA

3.24	Percentage Impedance at 75 deg C	
3.24.1	250/400/630 kVA	4.5 % with IS tolerance
3.24.2	1000 kVA	5.0 % with IS tolerance
3.24.3	1600/2000 kVA	6.25% with IS tolerance
3.25	Max Total losses(No Load+ Load Losses at 75ºC) at 50% of the rated load , kW	
3.25.1	250 kVA	0.98
3.25.2	400 kVA	1.225
3.25.3	630 kVA	1.86
3.25.4	1000 kVA	2.79
3.25.5	1600 kVA	4.2
3.25.6	2000 kVA	5.05
3.26	Max Total losses(No Load+ Load Losses at 75ºC) at 100% of the rated load , kW	
3.26.1	250 kVA	2.93
3.26.2	400 kVA	3.45
3.26.3	630 kVA	5.3
3.26.4	1000 kVA	7.7
3.26.5	1600 kVA	11.8
3.26.6	2000 kVA	15
3.27	Phase CT Ratio , Amp	
3.27.1	250 kVA	400/5
3.27.2	400 kVA	600/5
3.27.3	630 kVA	1000/5
3.27.4	1000 kVA	1500/5
3.27.5	1600 kVA	2500/5
3.27.6	2000 kVA	3000/5
3.28	HV cable size for all sizes / Conductor size	11 kV (E) grade , A2XCEWY 3C x 150 sqmm

3.29	Busbar size on HV side for cable termination, mm x mm	50x10-Aluminium/Tinned Copper
3.30	LV cable size, 650 /1100 V grade , A2XY cable single core 630 sqmm unarmoured (approx cable dia 40 mm)/ A2XY Cable single core 1000sqmm(Approx dia. 48mm)	Cable
3.30.1	250 kVA	1 runs per phase + 1 runs in Neutral
3.30.2	400 kVA	2 runs per phase + 2 runs in Neutral
3.30.3	630 kVA	3 runs per phase + 2 runs in Neutral
3.30.4	1000 kVA	4 runs per phase + 3 runs in Neutral
3.30.5	1600 KVA	6 runs per phase + 3 runs in Neutral-single core 630 sqmm 3 runs per phase + 2 runs in Neutral-single core 1000 sqmm
3.30.6	2000 kVA	7 runs per phase + 4 runs in Neutral-single core 630 sqmm 4 runs per phase + 3 runs in Neutral-single core 1000 sqmm
3.31	Busbar size on LV side for cable termination, mm x mm	
3.31.1	250/400/630 kVA	
3.31.1.1	Phase	100 x 12-Tinned Copper/Alumium
3.31.1.2	Neutral	100 x 12-Tinned Copper/Alumium
3.31.2	1000kVA	
3.31.2.1	Phase	100 x 12-Tinned Copper 2 runs 100 x 12-Aluminium
3.31.2.2	Neutral	100 x 12-Tinned Copper 2 runs 100 x 12-Aluminium
3.31.3	1600kVA	
3.31.3.1	Phase	160 x 12-Tinned Copper 2 runs 160 x 12-Aluminium

3.31.3.2	Neutral	160 x 12-Tinned Copper 2 runs 160 x 12-Aluminium
3.31.4	2000kVA	
3.31.4.1	Phase	2 runs 100 x 12-Tinned Copper 2 runs 160 x 12-Aluminium
3.31.4.2	Neutral	2 runs 100 x 12-Tinned Copper 2 runs 160 x 12-Aluminium
3.32	Maximum Overall Dimension Acceptable (length x width x height), mm x mm x mm	
3.32.1	250 KVA	1500 x1300x 1700
3.32.2	400 kVA	1500X1500X2000
3.32.3	630 kVA	1700X1700X2200
3.32.4	1000 kVA	1900X1900X2500
3.32.5	1600 kVA	2300X2000X2600
3.32.6	2000 kVA	2500X2000X2600
3.33	Short Circuit withstand Capacity of the transformer	
3.33.1	Three phase dead short circuit at secondary terminal with rated voltage maintained on the other side	For 3 secs.
3.33.2	Single phase short circuit at secondary terminal with rated voltage maintained on other side	For 3 secs.
3.34	Overload Capability	As per IS 2026/IEC 60905
3.35	Noise Level	400/630/1000/1600/2000 KVA- 56/57/58/60/61 Db respectively
3.36	Radio Influence Voltage	Maximum 250 microvolt

3.37	Harmonic suppression	Transformer to be designed for suppression of 3rd, 5th, 7th harmonic voltages and high frequency disturbances.
3.38	Partial Discharge	Transformer to be free from partial discharge upto 120 % of rated voltage as the voltage is reduced from 150 % of rated voltage i.e. there shall be no significant rise above background level
3.39	Tappings	Off Circuit taps on HV winding , +10% to - 10% in steps of 2.5 % , change of taps by externally operated switch
3.39.1	Rotary tap switch operating voltage	11 kV
3.39.2	Rotary tap switch current rating, Amp.	
3.39.2.1	250 KVA	20 Amps
3.39.2.2	400 kVA	60 Amp
3.39.2.3	630 / 1000 kVA	100 Amp
3.39.2.4	1600/2000 kVA	150 Amp

4.0 Construction & Design

4.1	Type	Double Copper wound, three phase, oil immersed, with ONAN cooling, with off circuit tap changer
4.2	**Major Parts**	
4.2.1	**Tank**	
4.2.1.1	Type	Non sealed type with conservator as per manufacturer's standard.
4.2.1.2	Material of Construction	Robust mild steel plate without pitting and low carbon content
4.2.1.3	Plate Thickness	Adequate for meeting the requirements of pressure and vacuum type tests as per IS
4.2.1.4	Welding features	i) All seams and joints shall be

		double welded ii) All welding shall be stress relieved for sheet thickness greater than 35 mm iii) All pipes, radiators, stiffeners, welded to the tank shall be welded externally
4.2.1.5	Tank features	i) Adequate space at bottom for collection of sediments ii) Stiffeners provided for rigidity and designed to prevent accumulation of water iii) No internal pockets in which gas/air can accumulate iv) No external pocket in which water can lodge v) Tank bottom with welded skid base vi) Tank cover sloped to prevent retention of rain water vii) Minimum disconnection of pipe work and accessories for cover lifting viii) Tanks shall be of a strength to prevent permanent deformation during lifting , jacking, transportation with oil filled. ix) Tank to be designed for oil filling under vacuum x) Tank cover fitted with lifting lug xi) Tank cover bent at all the ends xii) Minimum disconnection of pipe work and accessories for cover lifting
4.2.1.6	Flanged type adequately sized	i) HV line bushing

	inspection cover rectangular in shape required for	ii) LV line bushing iii) LV neutral bushing iv) Core / Winding
4.2.1.7	Fittings and accessories on main tank	See under fittings and accessories.
4.2.2	**Conservator for the main tank**	
4.2.2.1	Capacity	Adequate between highest and lowest visible levels to meet the requirement of expansion of oil volume in the transformer and cooling equipment from minimum ambient temperature to maximum operating temperatures.
4.2.2.2	Conservator oil preservation system	Conventional
4.2.2.3	Conservator features	i) Conservator shall be bolted into position so that it can be removed for cleaning / other maintenance purposes ii) Main pipe from tank shall project about 20 mm above conservator bottom for creating a sump for collection of impurities iii) Conservator minimum oil level corresponding to minimum temperature shall be well above the sump level. iv) Conservator to main tank piping shall be supported at minimum two points.

4.2.2.4	Fittings and accessories on main tank conservator	i) Prismatic oil gauge with MINIMUM, NORMAL and MAXIMUM marking ii) End Cover iii) Oil Filling Hole with cap iv) Silica Gel Dehydrating Breather with oil seal and dust filter with clear acrylic single piece clearly transparent cover resistant to UV rays(1kg). Breather shall be of Flanged type in circular shape with 4 no.holes of ½ inches with hardware of M10 bolts. Silica gel shall be of round ball type of 2.5mm dia. v) Drain Plug vi) Air release plug as required vii) Pressure/ Vacuum gauge viii) Magnetic Oil Gauge with LOW LEVEL ALARM
4.2.3	**Radiators**	Detachable type
4.2.3.1	Thickness	Minimum 1.2 mm
4.2.4.2	Features	With lifting lugs, air release plug,
4.2.5	**Core**	
4.2.5.1	Material	High grade , non ageing, low loss, high permeability, grain oriented, cold rolled silicon steel lamination. Core shall be low loss of 1Watt/kG (max)
4.2.5.2	Grade	Premium Grade minimum M3 or better
4.2.5.3	Lamination thickness	0.23 mm Max.
4.2.5.4	Design Flux Density at rated conditions at principal tap	As per Manufacturer design.
4.2.5.5	Maximum Flux Density at 12.5 % over	1.9 T

	excitation / over fluxing	
4.2.5.6	Core Design Features	i) Core shall be in the form of step and stack in three limb format. Note: Wound core shall not be acceptable ii) Magnetic circuit designed to avoid short circuit paths within core or to the earthed clamping structures iii) Magnetic circuit shall not produce flux components at right angles to the plane of lamination to avoid local heating iv) Least possible air gap and rigid clamping for minimum core loss and noise generation v) Adequately braced to withstand bolted faults on secondary terminals without mechanical damage and damage/ displacement during transportation and positioning. vi) Percentage harmonic potential with the maximum flux density under any condition limited to avoid capacitor overloading in the system vii) All steel sections used for supporting the core shall be thoroughly sand blasted after cutting , drilling, welding viii) Provision of lifting lugs for core coil assembly ix) Supporting framework designed not to obstruct complete drainage of oil from transformer

4.2.6	**Winding**	
4.2.6.1	Material	Electrolytic Copper
4.2.6.2	Maximum Current Density allowed	3 Amp per sq mm at all taps.
4.2.6.3	Winding Insulating material	Class A , non catalytic, inert to transformer oil, free from compounds liable to ooze out, shrink or collapse.
4.2.6.4	Winding Insulation	Uniform
4.2.6.5	Design features	i) Type of winding a. LV: Sprial/Helical b. HV: Crossover/Disc Note: Foil winding shall not be acceptable ii) Stacks of winding to receive adequate shrinkage treatment iii) Connections braced to withstand shock during transport, switching, short circuit, or other transients. iv) Minimum out of balance force in the transformer winding at all voltage ratios. v) Conductor width on edge exceeding six times its thickness vi) Transposed at sufficient intervals. vii) Coil assembly shall be suitably supported between adjacent sections by insulating spacers + barriers viii) Winding leads rigidly supported , using guide tubes if practicable ix) Winding structure and major insulation not to obstruct free flow of oil through ducts x) Provision of taps as per clause 3.39

4.2.7	**Transformer Oil**	
4.2.7.1	Type	Should be in accordance with specification as per Annex C of this document
4.2.8	**Bushings and Terminations**	
4.2.8.1	Type of HV side bushing	HV bushing should be top mounted. Outdoor, Pocelain, rated voltage and creepage as per 31mm/kV with voltage class of 12kV respectively
4.2.8.2	Type of LV side bushing	LV bushing should be top mounted. Outdoor, Porcelain, rated voltage and creepage as per 31mm/kV with voltage class of 1.1 kV respectively Additional neutral bushing of porcelain outside on top of LT cable box with brass palm connector (as per IS 3347) shall be provided. Connection between the main neutral and additional neutral shall be provided. For extra neutral bushing, protection box shall be provided in order to prevent ingress of water.
4.2.8.2.1	Essential provision for LV side line bushing	It shall be complete with copper palm complete with tinned copper busbar of size shall be as per clause 3.31.
4.2.8.2.2	Essential provision for LV side neutral bushing	In case of neutral bushing the stem and busbar shall be integral without bolted, threaded, brazed joints. Busbar size shall be as per clause 3.31
4.2.8.3	Arcing Horns	Not required
4.2.8.4	Support insulators inside HV cable box if provided	Epoxy resin cast, rated voltage 12 kV
4.2.8.5	Termination on HV side bushing	By bimetallic terminal connectors

		suitable for ACSR/AAAC conductor / Cable connection through cable box with disconnecting link suitable for 11kV(E) grade,A2XFY 3Cx 150sqmm
4.2.8.6	Termination of LV side bushing	By bimetallic terminal connectors suitable for LV Cable size of 650/1100VGrade, A2XY Cable single core 630sqmm (Approx dia 40mm) / A2XY Cable single core 1000sqmm (Approx dia. 48mm) for 1600/2000 KVA.
4.2.8.7	Minimum creepage distance of all bushings and support insulators.	31mm/KV
4.2.8.8	Protected creepage distance	At least 50 % of total creepage distance
4.2.8.9	Continuous Current rating	Minimum 20 % higher than the current corresponding to the minimum tap of the transformer
4.2.8.10	Rated thermal short time current	25 times the rated current for 2 sec
4.2.8.11	Atmospheric protection for clamp and fitting of iron and steel	Hot dip galvanizing as per IS 2633
4.2.8.12	Bushing terminal lugs in oil and air	Tinned copper
4.2.8.13	Sealing washers /Gasket ring	Nitrile cork rubber(RC70C)/ Expanded TEFLON(PTFE) as applicable.
4.2.9	**HV & LV cable box**	Required
4.2.9.1	Material of Construction	Sheet Steel min. 2.5 mm thick
4.2.9.2	Cable entry	At bottom through detachable gland plate with cable clamps of non magnetic material
4.2.9.3	Cable size for HV	11 kV (E) grade , A2XFY 3C x 150 sqmm
4.2.9.4	Cable size for LV	LV cable size, 650 /1100 V grade, A2XY cable single core 630 sqmm

		unarmoured (approx cable dia 40 mm) / A2XY Cable single core 1000sqmm (Approx dia. 48mm) for 1600/2000 KVA.
4.2.9.5	Cable size for LV Neutral	LV cable size, 650 /1100 V grade, A2XY cable single core 630 sqmm unarmoured (approx cable dia 40 mm) / A2XY Cable single core 1000sqmm (Approx dia. 48mm) for 1600/2000 KVA.
4.2.9.6	Detachable Gland Plate material for HV, LV, LV Neutral box	i) MS for HV cable box ii) Al for LV cable box.
4.2.9.7	Gland plate thickness for HV, LV, LV Neutral box	i) 3 mm for HV side cable box ii) 5 mm for LV cable box.
4.2.9.8	Cable gland for HV cables	Nickel plated brass double compression weatherproof cable gland
4.2.9.9	Cable lug for HV, LV, LV Neutral cables	i) Double hole Aluminium lugs for LV & Neutral side ii) Single hole Aluminum lugs for HV side
4.2.9.10	Essential parts	i) Flange type removable front cover with handles min two nos. ii) Tinned Copper Busbar of adequate size for Purchaser's cable termination with busbar supports iii) Earthing boss for the cable box iv) Earthing link for the gasketted joints at two point for each joint v) Earthing provision for cable Armour/ Screen vi) Flanged type inspection cover on top for bushing inspection and maintenance with handle vii) Drain plug viii) Rainhood on gasketted vertical joint ix) Danger / caution plate

4.2.9.11	Terminal Clearances	700mm, Minimum
4.2.9.12	Termination height required for cable termination	1000mm, Minimum
4.2.10	**Current Transformers**	
4.2.10.1	Provision	On all three phases on LV side
4.2.10.2	Mounting	On LV side bushings on all three phases with the help of fibre glass mounting plate affixed to main tank by nut bolt arrangement
4.2.10.3	Maintenance requirements	Replacement should be possible by removing fixing nut of mounting plate after removal of LT cable without disturbing LT bushing
4.2.10.4	Accuracy Class	0.5
4.2.10.5	Burden	10VA
4.2.10.6	Type	Resin Cast Ring type suitable for outdoor use.
4.2.10.7	CT ratio	
	250 KVA	400/5
	400kVA	600/5
	630kVA	1000/5
	1000kVA	1500/5
	1600kVA	2500/5
	2000kVA	3000/5
4.2.10.8	**CT terminal Box**	
4.2.10.8.1	Size	650 mm height x 750 mm width x 275 mm depth.
4.2.10.8.2	Fixing of instrument / meters within box	On slotted channel 40 x 12 mm size, channel fixed on vertical slotted angle 40 x 40 mm size at two ends
4.2.10.8.3	No of horizontal channels to be provided	Four
4.2.10.8.4	Fixing of terminals within the box	On horizontal slotted channel with the

		help of C channel available with the terminals
4.2.10.8.5	Location	On tank wall
4.2.10.8.6	Box door design	Openable from outside with antitheft hinge, padlock facility, door fixed by stainless steel allen screw M6 size , door shall have canopy for rain protection
4.2.10.8.7	Terminal strip	Nylon 66 material, minimum 4 sq mm, screw type for control wiring and potential circuit.
4.2.10.8.8	Cables and wires	PVC insulated, extruded PVC inner sheathed, armoured, extruded PVC outer sheathed 1100 V grade control cable as per latest edition of IS 1554 part 1 minimum 2.5 sq mm for signals and 4 sq mm for CT with multi strand copper conductor
4.2.10.8.9	Cable Glands	Nickel plated brass double compression weatherproof cable gland
4.2.10.8.10	Lugs on wires	Tinned copper pre insulated Pin, Ring, Fork type as applicable
4.2.10.8.11	Potential signal in CT box	i) Tapped from main LV busbar ii) Neutral Link and Fuse to be provided by bidder for PT
4.2.10.8.12	Essential provision	Wiring diagram to be fixed on the back of door along with CT spec. on Aluminum engraved plate fixed by rivet.
4.2.11	**Off Circuit tap Switch**	
4.2.11.1	Range /Step	Off circuit taps on HV winding, +10% to -10% in steps of 2.5%, change of taps by externally operated switch.
4.2.11.2	Type	Rotary type, 3 pole gang operated,

		draw out type
4.2.11.3	Operating Voltage	11kV
4.2.11.4	Rated Current for tap Switch	i) 400 kVA - 60 Amps ii) 630/1000 kVA - 100 Amps iii) 1600/2000kVA-150 Amps
4.2.11.5	Operating Handle	External at suitable height to be operated from ground level.
4.2.11.6	Essential provision	Tap position indicator, direction changing facility, locking arrangement, and caution plate metallic fixed by rivet.
4.2.12	**Pressure Relief Device**	
4.2.12.1	Type	Pressure Relief Valve (PRV)
4.2.12.2	Auxiliary contacts	2 NO
4.2.13	**Winding and Oil Temperature scanner**	Required
4.2.13.1	PT 100 sensor	For measurement of Oil temperature LV winding temperature.
4.2.13.2	No of potential free trip contacts	2 NO
4.2.13.3	No of potential free alarm contacts	2 NO
4.2.13.4	Auxiliary Supply	240 AC, Single phase, 50Hz. Tapped from LV side busbar through a MCB located inside box.
4.2.13.5	Communication port	RS 485 port for interfacing with FRTU on Modbus protocol. Battery/Super capacitor for data transmission to SCADA in the event of Auxiliary supply fail
4.2.13.5	Fixing of instrument	On side wall of tank
4.2.14	**Auxiliary Relay (hand reset type)**	Required to identify the type of fault/indication.
4.2.14.1	Quantity	4 no's Separate auxiliary relay to be provided for PRV, MOG,WTI/OTI,

		Buchholz relay.
4.2.14.2	Potential free contacts	2 NO
4.2.14.3	Auxiliary supply	240V AC
4.3	**Hardware**	
4.3.1	External	Hot dip galvanized bolts
4.3.2	Internal	Cadmium plated except special hardware for frame parts and core assembly as per manufacturer's design
4.4	**Gasket**	
4.4.1	For Transformer , surfaces interfacing with oil like inspection cover etc.	Nitrile cork rubber RC70C grade
4.4.2	For Cable boxes, Marshalling box, etc.	Neoprene rubber based/ cork nitrile
4.5	**Valves**	
4.5.1	Material of construction	Brass / gun metal
4.5.2	Type	Both end flanged gate valve / butterfly valve depending on application
4.5.3	Size	As per manufacturer's standard
4.5.4	Essential provision	Position indicator, locking rod, padlocking facility, valve guard, cover plate.
4.6	**Cable routing on Transformer**	Control cables for accessories on transformer tank shall be routed through perforated GI trays
4.6.1	Control cable specification	PVC insulated, extruded PVC inner sheathed, armoured, extruded PVC outer sheathed 1100 V grade control cable as per latest edition of IS 1554 part 1 minimum 2.5 sq mm for signals and 4 sq mm for CT with multi strand copper conductor
4.6.2	Specification of wires to be used inside marshalling box.	PVC insulated multi-strand flexible copper wires of minimum 2.5 sq mm size, 1100 V grade as per latest edition

		of relevant IS
4.7	**Terminal Blocks to be used by the vendor**	Nylon 66 material, minimum 4 sq mm, Stud type screw driver operated type for control wiring and potential circuit.
4.7.1	Essential provision for CT terminals	Sliding link type disconnecting terminal block Stud type screwdriver operated with facility for CT terminal shorting material of housing melamine/ Nylon66
4.8	**Cable glands to be used by the vendor**	Nickel plated brass double compression weatherproof cable gland
4.9	**Cable lugs to be used by the vendor**	
4.9.1	For power cables	Long barrel medium duty Aluminium lug with knurling on inside surface.
4.9.2	For Control Cable	Tinned copper pre insulated Pin, Ring, Fork type as applicable
4.10	**Painting of transformer, Radiator, marshalling box for CT, cable boxes etc.**	
4.10.1	Surface preparation	By 7 tank pretreatment process or shot blasting method
4.10.2	Finish on internal surfaces of the transformer	Bright Yellow heat resistant and oil resistant paint two coats. Paint shall neither react nor dissolve in hot transformer insulating oil.
4.10.3	Finish on inner surface of the CT terminal box, HV/LV/LVN cable box	White Polyurethane paint anti condensation type two coats , minimum dry film thickness 80 microns
4.10.4	Finish on outer surface of the transformer, radiator, CT terminal box, HV/LV/LVN cable box	Battle ship Grey shade 632 Polyurethane paint two coats, minimum dry film thickness 80 microns
4.10.5	Frame parts	Battle ship grey shade 632 IS 5, 80 micron minimum insulating oil resistant

		paint. Paint shall neither react nor dissolve in hot transformer insulating oil.

5.0 Fittings and Accessories on Transformer

5.1	Rating and Diagram Plate	Required
5.1.1	Material	Anodized aluminum 16SWG
5.1.2	Background	SATIN SILVER
5.1.3	Letters, diagram & border	Black
5.1.4	Process	Etching
5.1.5	Rating and Diagram Plate details	Following details shall be provided on rating and diagram plate as a minimum i) type/kind of transformer with winding material ii) standard to which it is manufactured iii) manufacturer's name; iv) transformer serial number; v) month and year of manufacture vi) rated frequency in Hz vii) rated voltages in kV viii) number of phases ix) rated power in kVA x) type of cooling (ONAN) xi) rated currents in A xii) vector group connection symbol xiii) 1.2/50µs wave impulse voltage withstand level in kV xiv) power frequency withstand voltage in kV xv) impedance voltage at rated current and frequency in percentage at principal, minimum and maximum tap xvi) Max. Total losses at 50 % rated

		load xvii) Max. Total losses at 100 % rated load xviii) Load loss at 50% & 100% rated load xix) No-load loss at rated voltage and frequency xx) Energy efficiency level. xxi) continuous ambient temperature at which ratings apply in deg C xxii) top oil and winding temperature rise at rated load in deg C; xxiii) winding connection diagram with taps and table of tapping voltage, current and power xxiv) transport weight of transformer xxv) weight of core and windings xxvi) Weight of core xxvii) Weight of winding xxviii) total weight xxix) volume of oil xxx) weight of oil xxxi) name of the purchaser xxxii) PO no and date xxxiii) Guarantee period
5.2	Terminal marking Plate for Bushing, anodized aluminium black lettering on satin silver background both inside cable boxes near termination and on cable box cover (all fixed by rivet)	Required
5.3	Company Monogram Plate fixed by rivet	Required
5.4	Lifting Lug to lift complete	Required

	transformer with oil	
5.5	Lifting lug for top cover	Required
5.6	Lashing Lug	Required
5.7	Jacking Pad with Haulage hole to raise or lower complete transformer with oil	Required
5.8	Detachable Bidirectional flat roller Assembly	Required
5.8.1	Roller center to center distance	Minimum 900 mm on the side of HV and LV cable box Maximum 800 mm on the other side (perpendicular to HV, LV cable box).
5.8.2	Essential provision	Roller dia 150 mm min., roller to be fixed in such a way so that the lowermost part of the skid is above ground by at least 100 mm when the transformer is installed on roller.
5.9	Pockets for ordinary thermometer on tank cover with metallic identification plate fixed by rivet.	Required
5.10	Drain valve (gate valve) for the main tank with cork above ground by 150mm minimum with padlocking and valve guard with metallic identification plate fixed by rivet.	Required
5.11	Filter valve (gate valve) at top with padlocking and valve guard with metallic identification plate fixed by rivet.	Required
5.12	Air Release Plug on tank cover with metallic identification plate fixed by rivet.	Required
5.13	Earthing pad on tank for	Required

	transformer earthing complete with non ferrous nut ., bolt, washers, spring washers etc. with metallic identification plate fixed by rivet	
5.14	Rainhood for vertical gasketted joints , in cable boxes, Conservator	Required Not required as per Annexure A Scope of supply
5.15	Earthing bridge by copper strip jumpers on all gasket joints at at least two points for electrical continuity	Required
5.16	Skid base welded type with haulage hole	Required
5.17	Core , Frame to tank Earthing	Required
5.18	Danger plate made of Anodized aluminum with white letters on red background on Transformer, cable boxes (all fixed by rivet)	Required
5.19	Caution plate for Off Circuit tap changer fixed by rivet.	Required
5.20	MOG with auxiliary contact wired upto Terminal Box	Required
5.21	Buchholz relay for transformer above 1000kVA	Required
5.22	Pressure relief valve	Required
5.23	WTI & OTI Temperature Scanner	Required
5.24	Auxiliary relays (4 no's)	Required
5.25	LT cable support-By aluminium clamp fixed on the on MS bracket of size 50x 10 supported from the tank wall shall be provided .	Required
5.26	HT cable support-By GI clamp fixed on the on MS bracket of size 50x 10 supported from the tank wall shall	Required

	be provided.	

6.0 Approved make of components

6.1	CT	Pragati / ECS / Kappa/Mehru/Continental/Nortex
6.2	Bushings	Baroda Bushing/Jaipur glass/CJI
6.3	Tap Changer	Alwaye /Paragon
6.4	MOG	Sukrut/Atvus
6.5	Valves	Newman/ATAM
6.6	CRGO	Nippon/JFE/Posco/Thyson kkurup
6.7	Copper	Birla copper/Sterlite
6.8	Pre compressed Pressboard	Raman Board, Mysore/ Senapathy Whiteley
6.9	Laminated Wood	Permalli Wallance / Rochling Engineers
6.10	Oil	Apar/Savita/Raj Petro/Gandhaar
6.11	Steel	TATA/Jindal/SAIL
6.12	Lugs/Glands	Jainson/Dowells/Comet
6.13	Radiators	CTR/Hi-Tech Radiators /Tarang Engineers
6.14	WTI/OTI	Precimeasure/ Pecon
6.15	Buchholz Relay	Sukrut/Atvus
6.16	Auxiliary Relay	GE/Alstrom

Note – Any other make of component offered by the bidder maybe reviewed & approved by purchaser

7.0 Quality assurance

7.1	Quality Assurance program	To be submitted before contract award. Program shall contain following i) The structure of the organization ii) The duties and responsibilities assigned to staff ensuring quality of work. iii) The bidder should have qualified technical & dedicated QA

		personnel at various stages of manufacture & testing. iv) Factory inspection of bidder may be carried out to ascertain the quality system and process in place at manufacturing facility. The same is applicable to bidders not approved with BSES. v) The system for purchasing, taking delivery and verification of materials vi) The system for ensuring quality of workmanship vii) The system for control of documentation viii) The system for the retention of records ix) The arrangements for the Supplier's internal auditing x) A list of the administration and work procedures required to achieve and verify Contract's quality requirements. These procedures shall be made readily available to the Purchaser for inspection on request
7.2	Quality Plan	To be submitted by the successful bidder for approval. Plan shall contain following as a minimum i) An outline of the proposed work and programm sequence ii) The structure of the Supplier's organisation for the contract iii) The duties and responsibilities assigned to staff ensuring quality of work for the contract iv) Inspection Hold and notification points mutually agreed. v) Submission of engineering documents required by the specification vi) The inspection of materials and components on receipt vii) Reference to the Supplier's work

		procedures appropriate to each activity viii) Inspection during fabrication/ construction ix) Final inspection and test x) Successful bidder shall include submittal of Mills invoice, Bill of lading, Mill's test certificate for grade, physical tests, dimension, specific watt loss per kG for the core material to the purchaser for verification in the quality plan suitably
7.3	Manufacturing Quality Assurance Plan	Refer Annexure D

8.0 Progress Reporting

8.1	Outline Document	To be submitted for purchaser approval for outline of production, inspection, testing, packing, dispatch, documentation programme
8.2	Detailed Progress report	To be submitted to Purchaser once a month containing i) Progress on material procurement ii) Progress on fabrication iii) Progress on assembly iv) Progress on internal stage inspection v) Reason for any delay in total programme vi) Details of test failures if any in manufacturing stages vii) Progress on final box up viii) Constraints ix) Forward path

9.0 Inspection & testing

9.1	Inspection and Testing during manufacture	Only type tested equipment shall be acceptable
9.1.1	Tank and Conservator	i) Check correct dimensions between wheels demonstrate turning of wheels through 90 deg and further dimensional check.

		ii) Check for physical properties of materials for lifting lugs, jacking pads etc. All load bearing welds, including lifting lug welds shall be subjected to iii) required load tests. iv) Leakage test of the conservator. v) Certification of all test results. vi) Oil leakage test . vii) Vacuum and Pressure test on tank as type test as per IS
9.1.2	Core	i)
9.1.2.1	Mother Core coil	Verification & inspection of the mother coil at port & putting stamp & seal may be inspected by BSES.
9.1.2.2	Core sample type testing	Reconciliation of mother coil by checking stamp & seal at factory before slitting. One sample of CRGO to be sealed for testing at ERDA/CPRI. Following Tests shall be conducted on the sample per P.O. i) Specific core loss measurement ii) Magnetic polarization iii) Magnetic permeability iv) Specific core loss measurement after accelerated ageing test v) Surface insulation resistivity vi) Electrical resistivity measurement vii) Stacking factor viii) Ductility(Bend test) ix) Lamination thickness x) Magnetization characteristics (B-H curve)
9.1.2.3	Core cutting	Bidder should have in house core cutting facility for proper monitoring & control on quality. In case it is done outside cutting shall be done in presence of BSES.
9.1.2.4	Core physical verification	i) Check on the quality of varnish if used on the stampings. a) Measurement of thickness and hardness of varnish on stampings. b) Solvent resistance test to check that varnish does not react in hot oil. c) Check over all quality of varnish by sampling to ensure uniform hipping colour, no bare spots. No ever burnt

		varnish layer and no bubbles on varnished surface. ii) Check on the amount of burns. iii) Bow check on stampings. iv) Check for the overlapping of stampings. Corners of the sheet are to be apart. v) Visual and dimensional check during assembly stage. vi) Check on complete core for measurements of iron-loss and check for any hot spot by exciting the core so as to induce the designed value of flux density in the core. vii) Check for inter laminar insulation between core sectors before and after pressing. viii) Visual and dimensional checks for straightness and roundness of core, thickness of limbs and suitability of clamps. ix) High voltage test (2 KV for one minute) between core and clamps. Certification of all test results.
9.1.2.5	Documents verification	Following documents to be submitted during the stage inspection i) Invoice of supplier ii) Mills test certificates iii) Packing list iv) Bill of lading v) Bill of entry certificates by customs
9.1.3	Insulating Materials	i) Sample check for physical properties of materials. ii) Check for dielectric strength. iii) Visual and dimensional checks. iv) Check for the reaction of hot oil on insulating materials. v) Certification of all test results.
9.1.4	Windings	i) Sample check on winding conductor for mechanical properties and electrical conductivity. ii) Visual and dimensional check on conductor for scratches, dept. mark etc. iii) Sample check on insulating paper for

		PE value, Bursting strength, Electric strength. iv) Check for the reaction of hot oil on insulating paper. v) Check for the bending of the insulating paper on conductor. vi) Check and ensure that physical condition of all materials taken for winding is satisfactory and free of dust. vii) Check for absence of short circuit between parallel strands. viii) Check for Brazed joints wherever applicable. ix) Measurement of voltage ratio to be carried out when core/ yoke is x) completely restocked and all connections are ready. xi) Certification of all test results.
9.1.4.1	Checks before drying process	i) Check conditions of insulation on the conductor and between the windings. ii) Check insulation distance between high voltage connection distance between high voltage connection cables and earthed and other live parts. iii) Check insulation distance between low voltage connection and earthed and other parts. iv) Insulation test of core earthing. v) Check for proper cleanliness vi) Check tightness of coils i.e. no free movement. vii) Certification of all test results.
9.1.4.2	Checks during drying process	i) Measurement and recording of temperature and drying time during vacuum treatment. ii) Check for completeness of drying. iii) Certification of all test results.
9.1.5	Oil sample testing	One sample of oil drawn from every lot of transformer offered for inspection should be tested at CPRI/ERDA lab for tests as listed under Table-1 of IS:1866 (2000). The cost of this testing should be included within the

		cost of transformer.
9.1.6	Test on fittings and accessories	As per manufacturer's standard
9.2	Routine tests	The sequence of routine testing shall be as follows i) Visual and dimension check for completely assembled transformer ii) Measurements of voltage ratio iii) Measurements of winding resistance at principal tap and two extreme taps. iv) Vector Group and polarity test v) Measurements of insulation resistance* vi) Separate sources voltage withstand test. vii) Measurement of iron losses and exciting current at rated frequency and 90%, 100% and 110% rated voltage. viii) Induced voltage withstand test. ix) Load losses measurement at 50 % & 100 % of load. x) Impedance measurement of principal tap (HV and LV) of the transformer. xi) Routine test of tanks xii) Induced voltage withstand test (to be repeated if type tests are conducted). xiii) Measurement of Iron loss (to be repeated if type test are conducted). xiv) Measurement of capacitance and Tan Delta for transformer winding and Tan Delta for transformer oil (for all transformers). xv) Ratio of CT xvi) Oil leakage test on completely assembled transformer xvii) Magnetic balance test xviii) Power frequency voltage withstand test on all auxiliary circuits xix) Certification of all test results. xx) Temperature Rise Test # Note: a) *Insulation resistance measurement

		shall be carried out at 5kV for HV and 1kV for LV. Value of IR should not be less than 1000 Mohms. Polarization Index (PI = IR_{10min}/IR_{1min}) should not be less than 1.5 (If one minute IR value is above 5000 Mohms and it is not be possible to obtain an accurate 10 minutes reading, in such cases polarization index can be disregarded as a measure of winding condition.) b) #Temperature rise test may be necessary to be carried one unit/lot. Purchaser's engineer, will at its discretion, select transformer for temp. rise test from any lot offered for inspection at manufacturer's works and witness the same for comparison with ERDA/CPRI type test results c) BSES may appoint recognized testing authority like CPRI /ERDA lab with their instruments & engineer's team and measure no load loss, load loss and percentage impedance of the transformer at supplier's works at our own cost. Bidder shall agree and give them full co-operation during their stay & testing at shop floor. The losses & impedance values so obtained will be considered as final.
9.3	Acceptance test at NABL lab	Bidder should have in-house NABL accredited testing facility. In case of unavailability of same, one Transformer of each rating shall be randomly selected and sealed by BSES Representative for complete acceptance test as per IS 1180 (including temperature test) at third party NABL Lab. Tests shall be conducted once per Rate contract.
9.4	Type Tests	On one transformer of each rating and type at CPRI/ERDA. i) Impulse withstand test on all three HV limbs of the transformers for chopped wave as per standard ii) Temperature rise test as per IS iii) Dissolved gas analysis before and after Temperature Rise Test

		iv) Pressure and Vacuum test on tank v) Note – Purchaser may choose to carry out short circuit, impulse & temperature rise test on one unit from a lot offered from inspection at CPRI/ERDA
9.5	Special Tests	On one transformer of each rating and type i) Dynamic & Thermal (3 sec) Short Circuit Test as per IS 2026 ii) Measure of zero seq. impedance (Cl. 16.10 IS 2026 Part I). iii) Measurement of acoustic noise level (Cl. 16.12 of IS 2026 Part I). iv) Measurement of harmonic level on no load current. v) Paint adhesion test. vi) High voltage withstand test shall be performed on the auxiliary equipment and wiring after complete assembly. Cost of such tests, if extra, shall be quoted separately by the Bidder.
9.6	Notification to bidders	In case bidder had conducted type & special tests from CPRI/ERDA on BSES design and there is no design change in the transformer less than 10 years from the date of the bid opening, then bidder need not to conduct the type test from CPRI/ERDA lab. The bidder shall submit the under taking that there is no change in design with respect to type tested design.
		The product offered must be of type tested quality. In case the product offered is never type & special tested the same (as per above clause 9.4.& 9.5), is to be conducted by bidder at his own cost at CPRI/ERDA
9.7	Customer Hold Point	i) GTP & Drawings approval ii) Core Inspection(See Cl No 9.1.2) Sample to be tested at CPRI/ERDA for each lot. iii) Tank Pressure & vacuum Test

		iv) Core & Coil Stage inspection of each lot to be offered for final testing.

10.0 Packing , Shipping, Handling and Storage

10.1	Packing	
10.1.1	Packing protection	Against corrosion, dampness, heavy rains, breakage and vibration
10.1.2	Packing for accessories and spares	Robust wooden non returnable packing case with all the above protection
10.1.3	Packing details	On each packing case details required as follows i) Individual serial number; ii) Purchaser's name; iii) PO number; iv) Destination; v) Supplier's name; vi) Name and address of supplier's agent vii) Description and quantity viii) Manufacturer's name ix) Country of origin x) Case measurements xi) Gross and net weights in kilograms xii) All necessary slinging and stacking instructions.
10.2	Shipping	i) The bidder shall ascertain at an early date and definitely before the commencementof manufacture, any transport limitations such as weights, dimensions, road culverts, overhead lines, free access etc. from the manufacturing plant to the project site; and furnish to the Purchaser confirmation that the proposed packages can be safely transported, as normal or oversize packages, upto the plant site. ii) Any modifications required in the infrastructure and cost thereof in this connection shall be brought to the notice of the Purchaser

10.3	Handling and Storage	As per manufacturer's instruction

11.0 Deviations

Deviations from this Specification shall be stated in writing with the tender by reference to the Specification clause/GTP/Drawing and a description of the alternative offer. In absence of such a statement, requirements of the Specification shall be met without exception.

12.0 Drawings& Data Submission Matrix

Drawing submission shall be as per the matrix given below. All documents/ drawing shall be provided on A3/A4 sheet in box file with separators for each section. PDF shall also be provided of all documents via USB. Deviation sheet and GTP shall be provided in excel sheet.Language of the documents shall be English only. Deficient/ improper document/ drawing submission may liable for rejection.

S.no	Documents to be submitted	With the bid	After Award	
			For Approval	Prior to dispatch
1	Copy of specification along with company seal & signature on each page.	✓	✓	
2	Guaranteed technical particulars	✓	✓	
3	Outline dimension drawing for each major component, general arrangement drawing showing component layout an general schematic diagrams.	✓	✓	
4	Type test certificates, where available, and sample routine test reports	✓	✓	
5	Detailed reference list of customers already using equipment offered during the last 5 years with particular emphasis on units of similar design and rating	✓		
6	Details of manufacturers quality assurance standard and programme and ISO 9000 series or equivalent national certification.	✓		
7	Deviations from this specification. Only deviations approved in writing before award of contract shall be accepted.	✓		
8	Recommended spare parts and consumable items for the five years of operation with prices and spare	✓		

S.no	Documents to be submitted	With the bid	After Award	
			For Approval	Prior to dispatch
	parts catalogue with price list for future requirements.			
9	Transport / shipping dimension and weights, space required for handling parts for maintenance	✓		
10	Write up on oil preservation system.		✓	✓
11	Quality assurance program.	✓	✓	
12	Programme for production and testing		✓	
13	General description of the equipment and all components, including brochures		✓	
14	Detailed dimension drawing for all components ,general arrangement drawing showing detailed component layout and detailed schematic and wiring drawings for all components like marshalling box and OTI/WTI scanner, PRV, Buchhloz relay. Auxiliary relays		✓	
15	Calculations to substantiate choice of electrical, structural, mechanical component size, ratings		✓	
16	Detailed loading drawing to enable the purchaser to design and construct foundations for the transformer.		✓	
17	Transport /shipping dimension with weights ,wheel base details, untanking height etc.		✓	
18	Terminal arrangements and cable box details		✓	
19	Flow diagram of cooling system showing no. of cooling banks		✓	
20	Drawings of major components like bushing,CT, OTI/WTI Scanner, PRV, Buchholz relay, Auxiliary relays, Valves, radiators etc		✓	
21	Lists of makes of all fittings and accessories		✓	
22	Statement drawing attention to all exposed points in the equipment at which contact with or in close proximity to other metals and stating clearly what protection is employed to prevent corrosion at each point		✓	

S.no	Documents to be submitted	With the bid	After Award	
			For Approval	Prior to dispatch
23	Detailed installation and commissioning instructions			✓
24	Inspection and test reports carried out in manufacturers works			✓
25	Test certificates of all bought out items. and catalogues			✓
26	Operation and maintenance instructions as well as trouble shooting charts.			✓

Annexure A Scope of supply

1.0 The scope of supply shall include following

1.1 Design, manufacture, assembly, testing at stages of manufacture as per Cl. 9 of this specification, final testing at manufacturer works on completely assembled transformer before dispatch, packing, transportation, delivery and submission of all documentation for the Power transformer with all accessories as below

Sr. No	Description	Scope of Supply
1.1.1	Fully assembled transformer with all major parts like conservator, Radiators, CT box, Fittings and accessories as per Clause 5.0 of this specification	YES
1.1.2	Off circuit tap changer as per this specification	YES
1.1.3	HV, LV, cable boxes	YES
1.1.4	Support steel material for support of cable boxes from ground	YES

1.1.5	Foundation Bolts for complete transformer	YES
1.1.6	Support structure to support of cable from the transformer tank	YES
1.1.7	Nickel Plated brass double compression glands for HV and LV, LVN cables (in case of termination by cable)	YES
1.1.8	Long barrel medium duty Aluminium lugs for power cables (in case of termination by cable)	YES
1.1.9	Nickel Plated brass double compression glands and tinned copper lugs for control cable termination in CT box for vendor's cables	YES
1.1.10	Cables and wires for transformer accessories and internal wiring of CT box	YES
1.1.11	Touch up paint, minimum 2 litres	YES
1.1.12	Extra Transformer oil 10 % in non returnable drums	YES
1.1.13	One spare complete set of gaskets	YES
1.1.14	Routine testing as per Cl. 9.2 & 9.3 of this specification	YES
1.1.15	Type testing as per Cl. 9.4 of this specification	YES
1.1.16	Special testing as per Cl. 9.5 of this specification	YES
1.1.17	Submission of Documentation as detailed below	YES

Annexure B Service Conditions

1.0.0	Delhi Atmospheric conditions	
a)	Average grade atmosphere :	Heavily polluted, dry
	Maximum altitude above sea level	1000 M
b)	Ambient Air temperature	Highest 50 deg C, Average 40 deg C
	Design ambient temperature	50 deg C
c)	Relative Humidity	90 % Max
d)	Seismic Zone	4
e)	Rainfall	750 mm concentrated in four months

Annexure C Technical Particulars of transformer oil

Transformer oil shall be new and conform to the following requirements:

1.0 Codes & standards

Latest revision of following codes & standards with all amendments –

	Standard no	Title
1.1	IS 335	New insulating oils
1.2	IS 1783	Drums for oils

2.0 Properties

The insulating material shall have following features

Sr No	Item description	Specification requirement
2.1	**Function**	
2.1.1	Viscosity	
2.1.1.1	Viscosity at 40^0C	15 mm^2/s, Max
2.1.1.2	Viscosity at 0^0C	1800 mm^2/s, Max
2.1.2	Pour Point	- 10^0C, Max
2.1.3	Water content	30 mg/Kg, Max
2.1.4	Breakdown voltage	
2.1.4.1	New unfiltered oil	30 kV, Min
2.1.4.2	After filtration	70 kV, Min
2.1.5	Density at 20^0C	0.895 g/ml, Max
2.1.6	Dielectric dissipation factor at 90^0C	0.005, Max
2.1.7	Particle Content	Manufacturer to specify the data
2.2	**Refining/Stability**	
2.2.1	Appearance of oil	Clear, free from sediment and suspended matter
2.2.2	Acidity	0.01 mg KOH/g, Max
2.2.3	Interfacial tension at 27^0C	0.04 N/m, Min
2.2.4	Total sulphur content	Manufacturer to specify the data
2.2.5	Corrosive sulfur	Not-corrosive
2.2.6	Potentially Corrosive sulfur	Not-corrosive
2.2.7	DBDS	Not detectable (<5 mg/kg)
2.2.8	Inhibitor	Not detectable (<0.01%)
2.2.9	Metal Passivator	Not detectable (<5 mg/kg)
2.2.10	Other additives	Manufacturer to specify the data
2.2.11	2-furfural and related Compounds content	Not detectable (<0.05 mg/kg) for each individual compound
2.3	**Performance**	
2.3.1	Oxidation stability, test duration 164 h	
2.3.1.1	Total acidity	1.2 mg KOH/g, Max
2.3.1.2	Sludge	0.8%, Max
2.3.1.3	DDF at 90^0C	0.5, Max

Sr No	Item description	Specification requirement
2.3.2	Gassing Tendency	Manufacturer to specify the data
2.3.3	ECT	Manufacturer to specify the data
2.4	**Health,safety and Environment**	
2.4.1	Flash point	135^0C, Min
2.4.2	PCA content Max	3%, Max
2.4.3	PCB content	Not detectable (<2 mg/Kg)

Annexure D Manufacturing Quality Assurance Plan

SL NO	CHARACTRISTICS	CLASS	TYPE OF CHECK	QUANTUM OF CHECK	REFERENCE DOCUMENT	ACCEPTANCE NORMS	FORMAT OF RECORD	AGENCY			REMARKS
								S	M	O	
1	2	3	4	5	6	7	8	9			10
A	**RAW Material**										
1	**Winding Conductor (PICC)**										
1.1	Bare Dimensions & Finish of Conductor	Major	Measurement	1 sample per size per lot	IEC 13730 Part 27,IEC 60317,IS 7404,IS 6160,IS 613	IEC 13730 Part 27,IEC 60317,IS 7404,IS 6160,IS 613	Supplier's TC	P	V	R	
1.2	Increase in dimensions due to Paper covering	Major	Measurement	-DO-	-DO-	-DO-	-DO-	P	V	R	
1.3	Resistivity @ 20°C	Major	Electrical	-DO-	-DO-	-DO-	-DO-	P	V	R	
1.4	No of Layers	Critical	Measurement	-DO-	-DO-	-DO-	-DO-	P	V	R	
1.5	Conductor Tensile strength	Critical	Mechanical	-DO-	-DO-	-DO-	-DO-	P	V	R	
1.6	Conductor Elongation	Critical	Mechanical	-DO-	-DO-	-DO-	-DO-	P	V	R	
1.7	% Overlap of Paper	Critical	Mechanical	-DO-	-DO-	-DO-	-DO-	P	V	R	

SL NO	CHARACTRISTICS	CLASS	TYPE OF CHECK	QUANTUM OF CHECK	REFERENCE DOCUMENT	ACCEPTANCE NORMS	FORMAT OF RECORD	AGENCY			REMARKS
								S	M	O	
1	2	3	4	5	6	7	8	9			10
1.8	Corner Radius	Critical	Mechanical	-DO-	-DO-	-DO-	-DO-	P	V	R	
1.9	**Kraft Paper Insulation**										
1.9.1	Thickness	Major	Measurement	1 sample per size per lot	IEC:60554, IS:9335	IEC:60554, IS:9335	Supplier's TC	P	V	R	
1.9.2	Apparent Density	Major	Chemical	-DO-	-DO-	-DO-	-DO-	P	V	R	
1.9.3	Air Permeability	Major	Chemical	-DO-	-DO-	-DO-	-DO-	P	V	R	
1.9.4	Tensile Index (Longitudinal and Transverse)	Major	Mechanical	-DO-	-DO-	-DO-	-DO-	P	V	R	
1.9.5	Electrical Strength in Air	Major	Electrical	-DO-	-DO-	-DO-	-DO-	P	V	R	
1.9.6	Ash Content	Major	Chemical	-DO-	-DO-	-DO-	-DO-	P	V	R	
1.9.7	pH of 5% Aqueous Extract	Major	Chemical	-DO-	-DO-	-DO-	-DO-	P	V	R	
1.9.8	Conductivity of 5% Aqueous Extract	Critical	Chemical	-DO-	-DO-	-DO-	-DO-	P	V	R	
1.9.9	Moisture Content	Major	Chemical	-DO-	-DO-	-DO-	-DO-	P	V	R	
1.9.10	Heat Stability	Major	Chemical	-DO-	-DO-	-DO-	-DO-	P	V	R	
1.9.11	Degree of Polymerization	Major	Chemical	-DO-	-DO-	-DO-	-DO-	P	V	R	

SL NO	CHARACTRISTICS	CLASS	TYPE OF CHECK	QUANTUM OF CHECK	REFERENCE DOCUMENT	ACCEPTANCE NORMS	FORMAT OF RECORD	AGENCY			REMARKS
								S	M	O	
1	2	3	4	5	6	7	8	9			10
1.9.12	Elongation (MD & CMD)	Major	Mechanical	-DO-	-DO-	-DO-	-DO-	P	V	R	
1.9.13	Tear index	Major	Mechanical	-DO-	-DO-	-DO-	-DO-	P	V	R	
2.0	**CRGO Laminations (Watt absorption)**										
2.1	Specific Core Loss	Major	Electrical	Random	IEC 60404, IS 3024, IS 649	IEC 60404, IS 3024, IS 649	Supplier's TC	P	V	R	
2.2	Surface Insulation resistance	Major	Electrical	-DO-	-DO-	-DO-	-DO-	P	V	R	
2.3	Ageing Test	Major	Measurement	-DO-	-DO-	-DO-	-DO-	P	V	R	
2.4	Stacking Factor	Major	Measurement	-DO-	-DO-	-DO-	-DO-	P	V	R	
2.5	Waviness	Major	Measurement	-DO-	-DO-	-DO-	-DO-	P	V	R	
2.6	Edge Burr	Major	Visual	-DO-	-DO-	-DO-	-DO-	P	V	R	
2.7	Sample testing for Checking Specific Core loss, accelerated ageing test, Surface insulation resistivity, AC permeability and magnetization, stacking	Major	Electrical	100%	-DO-	-DO-	--	--	P	W	Sample will be randomly selected by BSES & will be send for testing at CPRI/ERDA

SL NO	CHARACTRISTICS	CLASS	TYPE OF CHECK	QUANTUM OF CHECK	REFERENCE DOCUMENT	ACCEPTANCE NORMS	FORMAT OF RECORD	AGENCY			REMARKS
								S	M	O	
1	2	3	4	5	6	7	8	9			10
	factor, Ductility										lab.
3.12	Core Cutting	Major	Visual	Random	-DO-	-DO-	-DO-	P	W	W	
3.0	**Un-impregnated Laminated Wood**										
3.1	Thickness	Major	Visual	1 sample size / LOT	IS 3513/IEC 61061	IS 3513/IEC 61061	Supplier's TC	P	V	R	
3.2	Density	Major	Chemical	-DO-	-DO-	-DO-	-DO-	P	V	R	
3.3	Moisture Content	Major	Chemical	-DO-	-DO-	-DO-	-DO-	P	V	R	
3.4	Oil Absorption	Major	Chemical	-DO-	-DO-	-DO-	-DO-	P	V	R	
3.5	Cross breaking strength	Major	Mechanical	-DO-	-DO-	-DO-	-DO-	P	V	R	
3.6	Compressive Strength	Major	Mechanical	-DO-	-DO-	-DO-	-DO-	P	V	R	
3.7	Electric Strength in Oil	Major	Electrical	-DO-	-DO-	-DO-	-DO-	P	V	R	
3.8	Shrinkage in oil	Major	Mechanical	-DO-	-DO-	-DO-	-DO-	P	V	R	
3.9	Tensile Strength,compressive strength	Major	Mechanical	-DO-	-DO-	-DO-	-DO-	P	V	R	
4.0	**Press Boards (Pre-compressed)**										

SL NO	CHARACTRISTICS	CLASS	TYPE OF CHECK	QUANTUM OF CHECK	REFERENCE DOCUMENT	ACCEPTANCE NORMS	FORMAT OF RECORD	AGENCY			REMARKS
								S	M	O	
1	2	3	4	5	6	7	8	9			10
4.1	Thickness	Major	Measurement	1 sample/Size/LOT	IEC:60641, IS:1576	IEC:60641, IS:1576	Supplier's TC	P	V	R	
4.2	Tensile Strength (MD & CMD)	Major	Mechanical	-DO-	-DO-	-DO-	-DO-	P	V	R	
4.3	Shrinkage in Air (MD & CMD)	Major	Mechanical	-DO-	-DO-	-DO-	-DO-	P	V	R	
4.4	Moisture Content	Major	Chemical	-DO-	-DO-	-DO-	-DO-	P	V	R	
4.5	Oil Absorption	Major	Chemical	-DO-	-DO-	-DO-	-DO-	P	V	R	
4.6	Electrical Strength in Oil and air	Major	Electrical	-DO-	-DO-	-DO-	-DO-	P	V	R	
4.7	pH of 5% aqueous extract	Major	Chemical	-DO-	-DO-	-DO-	-DO-	P	V	R	
4.8	Conductivity of 5% aqueous extract	Major	Chemical	-DO-	-DO-	-DO-	-DO-	P	V	R	
4.9	Compressibility	Major	Mechanical	-DO-	-DO-	-DO-	-DO-	P	V	R	
4.10	Ash Content	Major	Chemical	-DO-	-DO-	-DO-	-DO-	P	V	R	
4.11	Apparent density	Major	Chemical	-DO-	-DO-	-DO-	-DO-	P	V	R	
4.12	Elongation (MD & CMD)	Major	Mechanical	-DO-	-DO-	-DO-	-DO-	P	V	R	
5.0	**Tank and its**										

SL NO	CHARACTRISTICS	CLASS	TYPE OF CHECK	QUANTUM OF CHECK	REFERENCE DOCUMENT	ACCEPTANCE NORMS	FORMAT OF RECORD	AGENCY			REMARKS
								S	M	O	
1	2	3	4	5	6	7	8	9			10
	accessories										
5.1	Structural steel										
5.1.1	Thickness	Major	Measurement	Random	IS 2062/ IS:1576	IS 2062/ IS:1576	Suppliers TC	P	V	R	
5.1.2	Yield Strength	Major	Mechanical	-DO-	-DO-	-DO-	-DO-	P	V	R	
5.1.3	Tensile Strength	Major	Mechanical	-DO-	-DO-	-DO-	-DO-	P	V	R	
5.1.4	Elongation	Major	Mechanical	-DO-	-DO-	-DO-	-DO-	P	V	R	
5.1.5	Bend test	Major	Mechanical	-DO-	-DO-	-DO-	-DO-	P	V	R	
5.1.6	Chemical composition	Major	Chemical	-DO-	-DO-	-DO-	-DO-	P	V	R	
5.2	**Manufacturing of Tank and accessories**										
5.2.1	Dimension check	Major	Measurement	100%	MFR. Spec/ DRG/BSES approved document	MFR. Spec/ DRG/ BSES approved document	MFR. Fabrication report	P	W	R	
5.2.2	Joint preparation	Major	Measurement	100%	-DO-	-DO-	-DO-	P	V	R	
5.2.3	Assembly and alignment	Major	Visual and measurement	100%	MFR. Spec/ DRG	MFR. Spec/ DRG	MFR. Fabrication report	P	V	R	

SL NO	CHARACTRISTICS	CLASS	TYPE OF CHECK	QUANTUM OF CHECK	REFERENCE DOCUMENT	ACCEPTANCE NORMS	FORMAT OF RECORD	AGENCY			REMARKS
								S	M	O	
1	2	3	4	5	6	7	8	9			10
5.2.4	DP Test on Welds on Load bearing members eg. Jack Pads	Major	DP Test	100%	-DO-	-DO-	-DO-	P	W	R	
5.2.5	Pressure test	Major	Mechanical	On One unit	CBIP	CBIP	Test Report	--	P	W	**STAGE INSPECTION**
5.2.6	Vacuum test	Major	Mechanical	On One unit	CBIP	CBIP	Test Report	--	P	W	**STAGE INSPECTION**
5.2.7	**Leakage test**										
5.2.7.1	Main Unit	Major	Mechanical	100%	MFR. STD	MFR. STD	Test report	P	W	R	
5.2.7.2	Conservator	Major	Mechanical	100%	MFR. STD	MFR. STD	Test report	P	W	R	
5.2.7.3	Pipes	Major	Mechanical	100%	MFR. STD	MFR. STD	Test report	P	W	R	
5.2.8	Surface preparation	Major	Visual	100%	MFR. STD	MFR. STD	MFR. Fabrication report	P	V	R	
5.2.9	Final Paint Coat (including Primer), Thickness & Shade	Major	Measurement	100%	MFR. STD	MFR. STD	Test report	P	V	R	
5.2.10	Paint Peel off test	Major	Visual	100%	MFR. STD	MFR. STD	Test report	--	P	R	

SL NO	CHARACTRISTICS	CLASS	TYPE OF CHECK	QUANTUM OF CHECK	REFERENCE DOCUMENT	ACCEPTANCE NORMS	FORMAT OF RECORD	AGENCY			REMARKS
								S	M	O	
1	2	3	4	5	6	7	8	9			10
6.0	**Bushing/Insulators**										
6.1	Make and rating	Critical	Visual	100%	IS 8603/IS 2099/App.Drg.	IS 8603/IS 2099/App.Drg.	Supplier's TC	P	V	R	
6.2	Visual inspection for surface smoothness, any damage, etc.	Critical	Visual	100%	-DO-	-DO-	-DO-	P	V	R	
6.3	Important dimension including Creepage distance	Major	Measurement	One sample /size / lot	-DO-	-DO-	-DO-	P	V	R/W	
6.4	Dry Power Frequency voltage withstabd test	Major	Electrical	100%	-DO-	-DO-	-DO-	P	V	R	
6.5	Air pressure test in water	Major	Electrical	100%	-DO-	-DO-	-DO-	P	V	R	
6.6	Electro -Tinning	Major	Electrical	100%	-DO-	-DO-	-DO-	P	V	R	
6.7	All routine electrical tests	Major	Electrical	-do-	-do-	-do-	-do-	P	V	R	
7.0	**Magnetic Oil Gauge**										
7.1	Make and dimensions	Major	Physical	100%	App.Drg./ Supplier Catalogue	App.Drg./ Supplier Catalogue	Supplier's TC	P	V	R	
7.2	Test for level (eg at 30°	Major	Mechanical	100%	-DO-	-DO-	-DO-	P	V	R	

SL NO	CHARACTRISTICS	CLASS	TYPE OF CHECK	QUANTUM OF CHECK	REFERENCE DOCUMENT	ACCEPTANCE NORMS	FORMAT OF RECORD	AGENCY			REMARKS
								S	M	O	
1	2	3	4	5	6	7	8	9			10
	Max)										
7.3	Switch contact test	Major	Electrical	100%	-DO-	-DO-	-DO-	P	V	R	
7.4	Leakage test	Major	Mechanical	100%	-DO-	-DO-	-DO-	P	V	R	
7.5	Switch operating and setting	Major	Electrical	100%	-DO-	-DO-	-DO-	P	V	R	
7.6	Di-electric test at 2 KV AC between live terminal and body	Major	Electrical	100%	-DO-	-DO-	-DO-	P	V	R	
8.	**Buchholz relay**										
8.1	Make and type	Critical	Visual	100%	App.Drg./ Supplier Catalogue /IS 3637	App.Drg./ Supplier Catalogue /IS 3637	Supplier's TC	P	V	R	
8.2	Bore size	Major	Measurement	One/size	-DO-	-DO-	-DO-	P	V	R	
8.3	Porosity and element test	Major	Critical	100%	-DO-	-DO-	-DO-	P	V	R	
8.4	Gas volume and surge test	Major	Mechanical	One/Size	-DO-	-DO-	-DO-	P	V	R	
8.5	HV test at 2 KV AC & IR test	Major	Electrical	100%	-DO-	-DO-	-DO-	P	V	R	

SL NO	CHARACTRISTICS	CLASS	TYPE OF CHECK	QUANTUM OF CHECK	REFERENCE DOCUMENT	ACCEPTANCE NORMS	FORMAT OF RECORD	AGENCY			REMARKS
								S	M	O	
1	2	3	4	5	6	7	8	9			10
8.6	Continuity for alarm/Trip	Major	Electrical	100%	-DO-	-DO-	-DO-	P	V	R	
9.0	**Radiator**										
9.1	Dimension, number of sections	Major	Measurement	100%	MFR. DRG	VTD DRG	Supplier's TC	P	V	R	
9.2	Leakage Test with Air	Major	Visual	100%	As per CBIP	As per CBIP	Supplier's TC	P	V	R	
9.3	Paint shade	Major	Visual & Measurement	Random	MFR. Specs /Drg	MFR. Specs /Drg	Supplier's TC	P	V	R	
9.4	Surface Preparation	Major	Measurement	100%	SA 2.5 of ISO 8503/2	SA 2.5 of ISO 8503/2	Supplier's TC	P	V	R	
10	**Off Circuit Tap Changer**										
10.1	Make, Rating and model	Major	Visual	100%	MFR. Spec/ IS 8468 /IEC 214-1989	MFR. Spec/ IS 8468 /IEC 214-1989	Supplier's TC	P	V	R	
10.2	Contact Resistance test	Major	Visual	100%	Supplier's STD	Supplier's STD	Supplier's TC	P	V	R	
10.3	Electrical Routine test	Major	Electrical	100%	IS 8468/ IEC 214	IS 8468/ IEC 214	Supplier's TC	P	V	R	
10.4	Mechanical test on diverter switch including	Major	Mechanical	100%	-DO-	-DO-	-DO-	P	V	R	

SL NO	CHARACTRISTICS	CLASS	TYPE OF CHECK	QUANTUM OF CHECK	REFERENCE DOCUMENT	ACCEPTANCE NORMS	FORMAT OF RECORD	AGENCY			REMARKS
								S	M	O	
1	2	3	4	5	6	7	8	9			10
	pressure test										
10.5	HV test for Auxiliary circuit	Major	Electrical	100%	-DO-	-DO-	-DO-	P	V	R	
10.6	Mechanical test on Tap selector switch with motor drive	Major	Mechanical	100%	-DO-	-DO-	-DO-	P	V	R	
10.7	Pressure test for Oil Compartment	Major	Mechanical test	100%	-DO-	-DO-	-DO-	P	V	R	
11.0	**Transformer Oil**	Major	Testing	One Sample from each lot	Annexure D of BSES spec.	Annexure D of BSES spec.	STC	P	V	R	One sample of oil shall be drawn from **each lot of Transformer** offered for final inspection by BSES representative and same shall be tested at CPRI/ERDA

SL NO	CHARACTRISTICS	CLASS	TYPE OF CHECK	QUANTUM OF CHECK	REFERENCE DOCUMENT	ACCEPTANCE NORMS	FORMAT OF RECORD	AGENCY			REMARKS
								S	M	O	
1	2	3	4	5	6	7	8	9			10
											lab as per relevant std.
12.0	**OTI / WTI Scanner**										
12.1	Make and Model	Critical	Visual	100%	MFR. STD/App. Drg.	MFR. STD/App. Drg.	Suppliers TC	P	P	R	
12.2	Calibration	Major	Electrical	100%	-DO-	-DO-	-DO-	P	P	R	
12.3	Check for alarm & trip signal operation against set value	Major	Electrical	100%	-DO-	-DO-	-DO-	P	P	R	
12.4	HV test	Major	Electrical	100%	-DO-	-DO-	-DO-	P	V	R	
12.5	Switch Setting	Major	Mechanical	100%	-DO-	-DO-	-DO-	P	P	R	
13.0	**Bushing Metal parts**										
13.1	Dimension Checks	Major	Mechanical	100%	MFR. STD /IS 3347	MFR. STD /IS 3347	Supplier's TC	P	V	R	
13.2	Surface Finish	Major	Visual	100%	-DO-	-DO-	-DO-	P	V	R	
14.0	**Current Transformers**										
14.1	Dimensions, make	Major	Measurement	100%	MFR. STD /App. DRG. / IS 2705	MFR. STD /App. DRG. / IS 2705	Supplier's TC	P	P	R	

SL NO	CHARACTRISTICS	CLASS	TYPE OF CHECK	QUANTUM OF CHECK	REFERENCE DOCUMENT	ACCEPTANCE NORMS	FORMAT OF RECORD	AGENCY			REMARKS
								S	M	O	
1	2	3	4	5	6	7	8	9			10
14.2	Rating and terminal marking	Major	Physical	100%	MFR. APPD. DRG	MFR. APPD. DRG	Supplier's TC	P	P	R	
14.3	Measurement of ratio and phase angle error	Major	Electrical	100%	IS 2705	IS 2705	Supplier's TC	P	V	R	
14.4	High Voltage test	Major	Electrical	100%	-DO-	-DO-	-DO-	P	V	R	
14.5	Inter-Turn insulation test	Major	Electrical	100%	-DO-	-DO-	-DO-	P	V	R	
14.6	Polarity	Major	Electrical	100%	-DO-	-DO-	-DO-	P	V	R	
14.7	Knee point voltage	Major	Electrical	-do-	-do-	-do-	-do-	P	V	R	Only for Class-PS NCT
14.8	Excitation current	Major	Electrical	-do-	-do-	-do-	-do-	P	V	R	Only for Class-PS NCT
14.9	Secondary winding resistance	Major	Electrical	-do-	-do-	-do-	-do-	P	V	R	Only for Class-PS NCT
15.0	**Valves/ Butterfly valves**										
15.1	Make & operation	Critical	Visual	100%	APP.drg./MFR. STD/IS 778	APP.drg./MFR. STD/IS 778	Supplier's TC	P	P	R	
15.2	Leakage test for body	Major	Mechanical	100%	-DO-	-DO-	-DO-	P	P	R	

SL NO	CHARACTRISTICS	CLASS	TYPE OF CHECK	QUANTUM OF CHECK	REFERENCE DOCUMENT	ACCEPTANCE NORMS	FORMAT OF RECORD	AGENCY			REMARKS
								S	M	O	
1	2	3	4	5	6	7	8	9			10
15.3	Leakage test for top spindle	Major	Mechanical	100%	-DO-	-DO-	-DO-	P	P	R	
15.4	Mounting dimensions	Major	Measurement	100%	-DO-	-DO-	-DO-	P	P	R	
15.5	Material of Body & Seat	Major	Chemical & measurement	1 sample per lot	-DO-	-DO-	-DO-	P	V	R	
16.0	**Pressure relief Valve/Device**										
16.1	Make	Critical	Visual	100%	MFR. STD/ App. Drg.	MFR. STD/ App. Drg.	-DO-	P	P	R	
16.2	Operating pressure	Major	Mechanical	100%	-DO-	-DO-	-DO-	P	P	R	
16.3	Switch Contact test	Major	Electrical	100%	-DO-	-DO-	-DO-	P	P	R	
16.4	Mounting dimensions	Major	Measurement	100%	-DO-	-DO-	-DO-	P	V	R	
16.5	HV test between body & terminal	Major	Electrical	100%	-DO-	-DO-	-DO-	P	V	R	
17.0	**Gasket**										
17.1	Appearance & Finish	Major	Mechanical	1 sample per size per lot	IS 4253-II, 1980/IS 3400	IS 4253-II, 1980/IS 3400	Supplier's TC	P	V	R	
17.2	Hardness, IRHD	Major	Mechanical	-DO-	-DO-	-DO-	-DO-	P	V	R	
17.3	Tensile Strength	Major	Mechanical	-DO-	-DO-	-DO-	-DO-	P	V	R	

SL NO	CHARACTRISTICS	CLASS	TYPE OF CHECK	QUANTUM OF CHECK	REFERENCE DOCUMENT	ACCEPTANCE NORMS	FORMAT OF RECORD	AGENCY			REMARKS
								S	M	O	
1	2	3	4	5	6	7	8	9			10
17.4	Compressibility	Major	Mechanical	-DO-	-DO-	-DO-	-DO-	P	V	R	
17.5	Compression set	Major	Mechanical	-DO-	-DO-	-DO-	-DO-	P	V	R	
17.6	Flexibility	Major	Mechanical	-DO-	-DO-	-DO-	-DO-	P	V	R	
18.0	**Silica gel Breather with oil seal**										
18.1	Type / model/weight	Major	Visual	100%	MFR. STD /DRG	MFR. STD /DRG	Supplier's TC	P	V	R	
18.2	Color of Gel	Major	Visual	100%	-DO-	-DO-	-DO-	P	V	R	
19	**Control cubicle/CT terminal Box**										
19.1	Dimensions	Major	Measurement	100%	BSES Approved document	BSES Approved document	Supplier's TC	P	V	R	
19.2	Hi-voltage test at 2kV RMS for one minute	Major	Electrical	-DO-	-DO-	-DO-	-DO-	P	V	R	
19.3	Insulation resistance at 5000 V DC	Major	Electrical	-DO-	-DO-	-DO-	-DO-	P	V	R	
19.4	Verification of component & Fittings	Major	Visual	-DO-	-DO-	-DO-	-DO-	P	V	R	

SL NO	CHARACTRISTICS	CLASS	TYPE OF CHECK	QUANTUM OF CHECK	REFERENCE DOCUMENT	ACCEPTANCE NORMS	FORMAT OF RECORD	AGENCY			REMARKS
								S	M	O	
1	2	3	4	5	6	7	8	9			10
19.5	Wiring check	Major	Visual	-DO-	-DO-	-DO-	-DO-	P	V	R	
19.6	Welding, grinding, chipping	Major	Visual	--DO-	-DO-	-DO-	-DO-	P	V	R	
19.7	Paint	Major	Visual	-DO-	-DO-	-DO-	-DO-	P	V	R	
B	**In Process**										
1	**Winding(LV and HV)**										
1.1	Check for Visual, physical and dimensional Parameters and no. of parallel conductors.										
1.1.1	Measurement of axial height, OD & ID& current density calculation.	Major	Measurement	100%	MFR. Data/Drg/BSES approved document	MFR. Data/Drg/BSES approved document	QC report/Test report	--	P	W	
1.1.2	Copper Conductor size (Bare & covered)	Major	Measurement	100%	-DO-	-DO-	-DO-	--	P	W	
1.1.3	No. of Turns / Disc	Major	Measurement	100%	-DO-	-DO-	-DO-	--	P	R	
1.2	Winding height	Major	Measurement	100%	-DO-	-DO-	-DO-	--	P	W	

SL NO	CHARACTRISTICS	CLASS	TYPE OF CHECK	QUANTUM OF CHECK	REFERENCE DOCUMENT	ACCEPTANCE NORMS	FORMAT OF RECORD	AGENCY			REMARKS
								S	M	O	
1	2	3	4	5	6	7	8	9			10
1.3	Visual inspection of Brazed joints as applicable	Major	Visual	100%	-DO-	-DO-	-DO-	--	P	R	
1.4	Tap Leads termination in case of tap winding	Major	Visual	100%	-DO-	-DO-	-DO-	--	P	R	
1.5	Current density calculation	--	--	--	--	--	--	--	P	W	
1.6	**Weight**	Major	Visual	100%	-DO-	-DO-	-DO-	--	P	W	
2.0	**Core Assembly**										
2.1	Visual & Key Dimensional check										
2.1.1	Diagonal distance	Major	Measurement	100%	MFR.Drg/BSES approved document	MFR.Drg/BSES approved document	QC report/Test report	--	P	W	
2.1.2	Window centre distance	Major	Measurement	100%	-DO-	-DO-	-DO-	--	P	W	
2.1.3	Window height	Major	Measurement	100%	-DO-	-DO-	-DO-	--	P	W	
2.2	Stack Thickness	Major	Measurement	100%	-DO-	-DO-	-DO-	--	P	W	
2.3	High Voltage test at 2 KV AC for I min between core & core clamp, Yoke	Major	Electrical	100%	-DO-	-DO-	-DO-	--	P	W	

SL NO	CHARACTRISTICS	CLASS	TYPE OF CHECK	QUANTUM OF CHECK	REFERENCE DOCUMENT	ACCEPTANCE NORMS	FORMAT OF RECORD	AGENCY			REMARKS
								S	M	O	
1	2	3	4	5	6	7	8	9			10
	bolt										
2.4	Pre-Core loss measurement	Major	Electrical	100%	-DO-	-DO-	-DO-	--	P	W	
2.5	Weight	Major	Visual	100%	-DO-	-DO-	-DO-	--	P	W	
3.0	**Core-Coil Assembly**										
3.1	Top & Bottom insulation arrangement	Major	Visual	100%	MFR.Data /DRG/BSES approved document	MFR.Data /DRG/BSES approved document	QC report	--	P	R	
3.2	Lead arrangement	Critical	Visual	100%	-DO-	-DO-	-DO-	--	P	R	
3.3	Tap & Lead End Brazing & Insulation	Critical	Visual	100%	-DO-	-DO-	-DO-	--	P	R	
3.4	Dimension of Coil After Shrinkage	Major	Measurement	100%	-DO-	-DO-	-DO-	--	P	R	
3.5	Verification of Major electrical clearances	Major	Visual & Measurement	100%	-DO-	-DO-	-DO-	--	P	R	
3.6	HV/LV Connection	Major	Visual	100%	-DO-	-DO-	-DO-	--	P	R	
3.7	Cleanliness	Major	Visual	100%	-DO-	-DO-	-DO-	-	P	R	
4.0	**Core-Coil Assembly**										

SL NO	CHARACTRISTICS	CLASS	TYPE OF CHECK	QUANTUM OF CHECK	REFERENCE DOCUMENT	ACCEPTANCE NORMS	FORMAT OF RECORD	AGENCY			REMARKS
								S	M	O	
1	2	3	4	5	6	7	8	9			10
	Before Ovening										
4.1	Initial Ratio test	Major	Measurement	100%	-DO-	-DO-	-DO-	--	P	R	
5.0	**Core-coil assembly during drying**										
5.1	Measurement & recording of temperature & drying time during vacuum treatment.	Major	Visual	100%	MFR.Data /DRG	MFR.Data /DRG	QC report	--	P	R	
5.2	Check for completeness of drying	Major	Visual	100%	MFR.Data /DRG	MFR.Data /DRG	QC report	--	P	R	
5.3	Certification of all test	Major	Visual	100%	MFR.Data /DRG	MFR.Data /DRG	QC report	--	P	R	
6.0	**Core-Coil Assembly After Ovening**										
6.1	Ratio Test,Vector Group & Magnetic Balance test	Major	Electrical	100%	-DO-	-DO-	QC report /Test report	--	P	W	
6.2	Recording of time/Temp, Vacuum	Major	Measurement	100%	-DO-	-DO-	-DO-	--	P	R	
6.3	Record of Moisture extract	Major	Measurement	100%	MFR. STD	MFR. STD	QC report	--	P	R	

SL NO	CHARACTRISTICS	CLASS	TYPE OF CHECK	QUANTUM OF CHECK	REFERENCE DOCUMENT	ACCEPTANCE NORMS	FORMAT OF RECORD	AGENCY			REMARKS
								S	M	O	
1	2	3	4	5	6	7	8	9			10
6.4	Verification of completeness & Drying	Major	Verify	100%	MFR. STD	MFR. STD	QC report	--	P	R	
6.5	Insulation resistance measurement by Megger	Major	Electrical	100%	MFR. STD	MFR. STD	Test report	--	P	R	
6.6	Earthing connection	Major	Visual	-DO-	MFR. STD	MFR. STD	QC Report	--	P	R	
7.0	**Tanking**										
7.1	Electrical clearance arrangement	Major	Measurement	100%	MFR. DRG	MFR. DRG	QC report	--	P	R	
7.2	Verification of Core-Frame Clamping arrangement	Major	Visual	100%	-DO-	-DO-	-DO-	--	P	R	
7.3	Core to frame insulation resistance test & HV test at 2 KV for min	Major	Electrical	100%	-DO-	-DO-	-DO-	--	P	R	
8.0	**Final Assembly for testing**										
8.1	Fittings of external accessories	Major	Visual	100%	MFR. STD /DRG	MFR. STD /DRG	Job Card	--	P	R	
8.2	Internal Oil leakage test on main unit	Major	Visual	100%	CBIP	CBIP	QC report	--	P	R	

SL NO	CHARACTRISTICS	CLASS	TYPE OF CHECK	QUANTUM OF CHECK	REFERENCE DOCUMENT	ACCEPTANCE NORMS	FORMAT OF RECORD	AGENCY			REMARKS
								S	M	O	
1	2	3	4	5	6	7	8	9			10
8.3	Oil filtration & pressure test	Major	Visual	-DO-	IS 1180	IS 1180	-DO-	-	P	R	
C	**Final testing**										
1	**Routine Test**										
1.1	Voltage Ratio test and check of phase displacement	Major	Electrical	100%	IS 2026/IS 1180	IS 2026/IS 1180	Test Report	--	P	W	
1.2	Winding Resistance at all tap corrected to 75°C	Major	Electrical	100%	IS 2026/IS 1180	IS 2026/IS 1180	Test report	--	P	W	
1.3	No Load Loss & Current @90%,100%&112.5% of rated voltage	Major	Electrical	100%	IS 2026/IS 1180	IS 2026/IS 1180	Test report	--	P	W	To be repeated after type test.
1.4	Impedance Voltage/Short Circuit Impedance(Principal Tap)	Major	Electrical	100%	IS 2026/IS 1180	IS 2026/IS 1180	Test report	--	P	W	
1.5	Load Loss measurement at 50% and 100% of load @Principal, Max, MinTap	Major	Electrical	100%	IS 2026/IS 1180	IS 2026/IS 1180	Test report	--	P	W	

SL NO	CHARACTRISTICS	CLASS	TYPE OF CHECK	QUANTUM OF CHECK	REFERENCE DOCUMENT	ACCEPTANCE NORMS	FORMAT OF RECORD	AGENCY			REMARKS
								S	M	O	
1	2	3	4	5	6	7	8	9			10
1.6	Induced over voltage	Major	Electrical	100%	IS 2026/IS 1180	IS 2026/IS 1180	Test report	--	P	W	To be repeated after type test
1.7	Separate Source Voltage Test	Major	Electrical	100%	IS 2026/IS 1180	IS 2026/IS 1180	Test report	--	P	W	
1.8	Insulation Resistance &PI(10 min / 1 min)	Major	Electrical	100%	--	--	Test report	--	P	W	IR shall be more than 2000 MΩ PI Shall be more than1.5
1.9	Voltage Vector Relationship & Polarity	Major	Electrical	100%	IS 2026/IS 1180	IS 2026/IS 1180	Test report	--	P	W	
1.10	Magnetic Balance Test	Major	Electrical	100%	IS 2026/IS 1180	IS 2026/IS 1180	Test report	--	P	W	
1.11	Oil leakage test on transformer with complete fitting and accessories	Major	Visual	100%	CBIP	CBIP	Test report	--	P	W	
1.12	Polarity check & Ratio Test of LVWTI CT/	Major	Electrical	100%	IS 2026/IS 1180	IS 2026/IS 1180	Test report	--	P	W	

SL NO	CHARACTRISTICS	CLASS	TYPE OF CHECK	QUANTUM OF CHECK	REFERENCE DOCUMENT	ACCEPTANCE NORMS	FORMAT OF RECORD	AGENCY			REMARKS
								S	M	O	
1	2	3	4	5	6	7	8	9			10
	Metering CT										
1.13	BDV test on Transformer Oil	Major	Electrical	100%	IS 2026/IS 1180	IS 2026/IS 1180	Test report	--	P	W	
1.14	Power frequency withstand on auxiliary circuit	Major	Electrical	100%	IS 2026/IS 1180	IS 2026/IS 1180	Test report	--	P	W	
1.15	Heat Run Test (Temp. Rise Test)	Major	Testing	One Unit (each lot)	IS 2026/IS 1180	IS 2026/IS 1180	Test Report	--	P	W	
1.16	Pressure relief device test	Major	Testing	One Unit (each lot)	MFR. STD	MFR. STD	Test Report	--	P	W	
1.17	Visual and dimensional check	Major	Visual	100%	Approved drawings	Approved drawings	Test Report	--	P	W	
1.18	Measurement of Cap & tandelta of Wdg, Oil and HV bushing	Major	Electrical	One unit	--	--	Test report	--	P	W	
1.19											
2.0	**Type test (One unit of each type and rating of Transformer at CPRI/ERDA)**										
2.1	Heat Run Test (Temp. Rise Test)	Major	Testing	One Unit	IS 2026	IS 2026	Test Report	**CPRI/ERDA**			

SL NO	CHARACTRISTICS	CLASS	TYPE OF CHECK	QUANTUM OF CHECK	REFERENCE DOCUMENT	ACCEPTANCE NORMS	FORMAT OF RECORD	AGENCY			REMARKS
								S	M	O	
1	2	3	4	5	6	7	8	9			10
2.2	Dynamic & Thermal (3 sec) Short Circuit Test	Major	Testing	One Unit	IS 2026	IS 2026	Test Report	**CPRI/ERDA**			
2.3	Impulse withstand Test on all HV & LV Limb for Chopped wave.	Major	Testing	One Unit	IS 2026	IS 2026	Test Report	**CPRI/ERDA**			
2.4	DGA Test Before & After temperature rise	Major	Testing	One Unit	Relevant std.	Relevant std.	Test Report	**CPRI/ERDA**			Test shall be conducted once per PO
3.0	**Special Test (One unit of each type and rating of Transformer)**										
3.1	Zero Phase Sequence Test	Major	Testing	One Unit	IS 2026	IS 2026	Test Report	--	P	W	
3.2	Noise Level Test	Major	Testing	One Unit	NEMA TR-1	NEMA TR-1	Test Report	--	P	W	
3.3	No Load Harmonic Test	Major	Testing	One Unit	IS 2026	IS 2026	Test Report	--	P	W	
3.4	HV Test on all auxiliary equipment and wiring after complete assembly	Major	Testing	One Unit	--	--	Test Report	--	P	W	
D	**Dispatch & Packing**										
1.1	Identification & packing	Major	Visual	100%	As per packing list	As per packing list	Packing List	--	P	--	

SL NO	CHARACTRISTICS	CLASS	TYPE OF CHECK	QUANTUM OF CHECK	REFERENCE DOCUMENT	ACCEPTANCE NORMS	FORMAT OF RECORD	AGENCY			REMARKS
								S	M	O	
1	2	3	4	5	6	7	8	9			10
1.2	Check for proper Packing	Major	Visual	100%	As per packing list	As per packing list	Packing List	--	P	--	
1.3	Visual check before dispatch	Major	Visual	100%	As per packing list	As per packing list	Packing List	--	P	--	

Note:

- Transformer from each lot may be opened for core and winding verification. BSES approval is be taken prior to opening the transformer.
- Type Test shall be valid for 10 years.

All IS and IEC standards with their latest revisions/amendments shall be applicable

LEGEND:

S: Supplier
M: Main Contractor (Manufacturer)
O: Owner (BSES)

P - Perform
V - Verify
R – Review
W- Witness

Schedule A Guaranteed Technical Particulars (Data by Seller)

Sr.	Particulars	Specified / Required	Offered
1.0	General		
1.1	Make		
1.2	Type	Oil immersed, core type, step down located generally outdoor but may be located indoor also with poor ventilation. Bidder shall confirm full rating available in indoor location also	
2.0	Nominal Continuous Rating, KVA		
2.1	HV winding	250/400/630/1000/1600/2000kVA	
2.2	LV winding	250/400/630/1000/1600/2000kVA	
3.0	Rated voltage (kV)		
3.1	HV Winding	11 kV	
3.2	LV Winding	415 volt	
4.0	Rated current (Amps)	250/400/630/1000/1600/2000kVA	
4.1	HV Winding		
4.2	LV Winding		
5.0	Connections		
5.1	HV Winding	Delta	
5.2	LV Winding	Star with neutral	
5.3	Vector Group reference	Dyn11	
6.0	Impedance at principal tap rated current and frequency, ohm @75 deg C		
6.1	Impedance	4.5%/4.5% / 4.5%/ 5.0/6.25/6.25 % with IS tolerance	
6.2	Reactance		
6.3	Resistance		
6.4	X/R ratio		
6.5	Impedance at lowest tap at rated		

	current and frequency		
6.6	Impedance at highest tap at rated current and frequency		
7.0	Resistance of the winding at 75^0 C in ohm		
7.1	a) HV		
7.2	b) LV		
8.0	Zero sequence impedance in ohm		
8.1	a) HV		
8.2	b) LV		
9.0	Guaranteed maximum Total losses at principal tap at 75°C, kW		
9.1	50 % of Load	as per Spec Cl 3.25	
9.2	100% of Load	as per Spec Cl 3.26	
9.3	No Load Loss (Max)		
9.4	Total I^2R losses of windings @ 75 deg C, KW		
9.5	Total stray loses @ 75 deg C, KW		
9.6	Total Load losses (Max.), KW		
9.7	No load loss at maximum permissible voltage and frequency (approx.),kW		
10.0	Temperature rise over reference ambient of 40 ^{0}C		
10.1	Top oil by thermometer ^{0} C	40 ^{0}C	
10.2	Winding by resistance^0 C	45 ^{0}C	
11.0	Efficiency		
11.1	Efficiency at 75^0C and unity power factor %		
11.1.1	at 110% load		
11.1.2	at 100% load		
11.1.3	at 80% load	Not Less than 99.5%	
11.1.4	at 60% load		
11.1.5	at 40% load		

11.1.6	at 20% load		
11.2	Efficiency at 75^0C and 0.8 power factor lag %		
11.2.1	at 110% load		
11.2.2	at 100% load		
11.2.3	at 80% load		
11.2.4	at 60% load		
11.2.5	at 40% load		
11.2.6	at 20% load		
11.3	Maximum efficiency at 75^0C %		
11.4	Load and power factor at which it occurs		
12.0	Regulation , (%)		
12.1	Regulation at full load at 75^0 C		
12.1.1	at unity power factor		
12.1.2	at 0.8 power factor lagging		
12.2	Regulation at 110% load at 75^0 C		
12.2.1	at unity power factor		
12.2.2	at 0.8 power factor lagging		
13.0	Tappings		
13.1	Type		
13.2	Capacity		
13.3	Range-steps x % variation		
13.4	Taps provided on HV winding (Yes / No)		
13.5	Rated current of rotary switch		
14.0	Cooling system		
14.1	Type of cooling	ONAN	
14.2	No. of cooling unit Groups		
14.3	Capacity of cooling units		
14.4	Mounting of radiators		
14.5	Number of Radiators		
14.8	Total radiating surface , sqmm		
14.9	Thickness of radiator tubes, mm	Minimum 1.2 mm	

15.0	Details of Tank		
15.1	Material	Robust mild steel plate without pitting and low carbon content	
15.2	Thickness of sides mm		
15.3	Thickness of bottom mm		
15.4	Thickness of cover mm		
15.5	Confirmation of Tank designed and tested for Vacuum, Pressure (Ref: CBIP Manual) , (Yes/ No)		
15.5.1	Vacuum mm of Hg. / (kN/m^2)	As per IS	
15.5.2	Pressure mm of Hg.		
15.6	Is the tank lid sloped?	Yes	
15.7	Inspection cover provided (Yes / No)	as per spec	
15.8	Location of inspection cover (Yes / No)		
15.9	Min. dimensions of inspection cover (provide list of all inspection cover with dimension), mm x mm		
16.0	Core		
16.1	Type:	Core	
16.2	Core material grade	Premium grade minimum M3 or better	
16.3	Core lamination thickness in mm		
16.4	Insulation of lamination	With insulation coating on both sides	
16.5	Design flux density at rated condition at principal tap, Tesla		
16.6	Maximum flux density at 12.5 % overexcitation /overfluxing, Tesla	1.9 Tesla Max allowed	
16.7	Equivalent cross section area mm^2		

16.8	Guaranteed No Load current at 100% rated voltage , Amps		
16.8.1	HV		
16.8.2	LV		
16.9	Guaranteed No Load current At 110% rated voltage, Amps		
16.9.1	HV		
16.9.2	LV		
17.0	Type of Winding		
17.1	HV		
17.2	LV		
17.3	Conductor material	Electrolytic Copper	
17.4	Current density (HV/LV)	Maximum allowed 3.0 A per sq mm at all taps	
17.5	Gauge/area of cross section of conductor		
17.5.1	a) HV		
17.5.1	b) LV		
17.6	Insulating material		
17.6.1	HV Turn		
17.6.2	LV Turn		
17.6.3	LV Core		
17.6.4	HV - LV		
17.7	Insulating material thickness, mm		
17.7.1	HV Turn		
17.7.2	LV Turn	-	
17.7.3	LV to Core		
17.7.4	HV to LV		
18.0	Minimum design clearance, mm		
18.1	HV to earth in Air		
18.2	HV to earth in oil		
18.3	LV to earth in Air		
18.4	LV to earth in oil		
18.5	Between HV & LV in Air		

18.6	Between HV & LV in oil		
18.7	Top winding and yoke		
18.8	Bottom winding and yoke		
19.0	**Insulating oil**		
19.1	Quantity of oil Ltrs		
19.1.1	In the Transformer tank		
19.1.2	In each radiator		
19.1.4	Total quantity		
19.2	10% excess oil furnished?	Yes in separate non returnable drums with each transformer	
19.3	Type of Oil	As per cl 4.2.7	
20.0	**Bushing / Support Insulator**		
20.1	Make	-	
20.2	Type		
20.2.1	HV side	As per Cl. 4.2.8.1 of the spec	
20.2.2	LV side	As per Cl. 4.2.8.2 of the spec	
20.3	Reference Standard		
20.4	Voltage class, kV		
20.4.1	HV side Bushing/ Support Insulator	12 kV	
20.4.2	LV side line and neutral bushing/ Support Insulator	1.1 kV	
20.5	Creepage factor for all bushing / Support Insulator mm/KV	31 mm / kV	
20.6	Rated thermal short time current		
20.6.1	HV bushing	25 times rated current for 2 secs.	
20.6.2	LV line and neutral bushing	25 times rated current for 2 secs.	
20.7	Weight, Kg		
20.7.1	HV bushing		
20.7.2	LV line and neutral bushing		
20.8	Free space required for bushing removal, mm		
20.8.1	HV bushing		
20.8.2	LV line and neutral bushing		

21.0	**Terminal connections**		
21.1	HV	Cable size as per Cl no 3.28	
21.2	LV	Cable size as per Cl no 3.30	
21.3	LV Neutral	Cable size as per Cl no 3.30	
22.0	**HV cable box**	Required	
22.1	Suitable for cable type,size	Cable size as per Cl no 3.28	
22.2	Termination height	750 mm min.	
22.3	Gland plate dimension, mm x mm		
22.4	Gland plate Material	MS	
22.5	Gland plate thickness	3 mm min.	
22.6	Phase to phase clearance inside box,mm	180 mm	
22.7	Phase to earth inside box,mm	120 mm	
23.0	**LV Cable box**	Required	
23.1	Suitable for cable type , size	Cable size as per Cl no 3.30	
23.2	Termination height	1000 mm, min.	
23.3	Gland plate dimension, mmxmm		
23.4	Gland plate material	Aluminium	
23.5	Gland plate thickness	5 mm min.	
23.6	Phase to phase	25 mm	
23.7	Phase to earth	25 mm	
24.0	L.V neutral Cable termination arrangement	Separate cable box not required (LV-N to be provided in LV cable box.)	
25.0	Current Transformer on LV phases		
25.1	Type		
25.2	Make		
25.3	Reference Standard		
25.4	CT Ratio		
25.5	Burden, VA		
25.6	Class of Accuracy		
25.7	CT terminal box size		

26.0	Pressure release device		
26.1	Minimum pressure the device is set to rupture		
26.1.1	For Main Tank		
26.1.2	Alarm and trip contact ratings of protective devices		
27.0	Fittings Accessories Each Transformer furnished as per Clause No 5. (Bidder shall attach separate sheet giving details, make and bill of materials)		
27.1	OTI/WTI Scanner		
27.1.1	Make		
27.1.2	Model no		
27.1.3	Auxiliary supply		
27.1.4	Manual submitted (Yes/No)		
27.2	Buchholz Relay		
27.2.1	Make		
27.2.2	Model no		
27.2.3	Auxiliary supply		
27.2.4	Manual submitted (Yes/No)		
27.3	Auxiliary relays for Fault/indication identification (PRV, Buchholz relay, MOG)		
27.3.1	Make		
27.3.2	Model no		
27.3.3	Auxiliary supply		
27.3.4	Potential free contacts		
27.3.5	Manual submitted (Yes/No)		
28.0	Painting: as per clause for the transformer, cable boxes, radiator, Marshalling box (Yes/No)		
29.0	Max over all transformer dimensions	**As per Clause 3.32**	

29.1	Length, mm		
29.2	Breadth, mm		
29.3	Height, mm		
30.0	Transformer Tank Dimensions		
30.1	Length, mm		
30.2	Breadth, mm		
30.3	Height, mm		
31.0	Weight data		
31.1	Core, kG		
31.2	Frame parts, kG		
31.3	Core and frame, kG		
31.4	Total Winding, kG		
31.5	Core , Frame, Winding, kG		
31.6	Tank, kG		
31.7	Tank lid, kG		
31.8	Empty conservator tank, kG		
31.9	Each radiator empty, kG		
31.10	Total weight of all radiators empty, kG		
31.11	Weight of oil in Tank, kG		
31.12	Weight of oil in Conservator, kG		
41.13	Weight of oil in each Radiators, kG		
31.14	Total weight of oil in Radiators, kG		
31.16	Total Transport weight of the transformer, kG		
32.0	Volume Data		
32.1	Volume of oil in main tank, litres		
32.2	Volume of oil between highest and lowest levels of main conservator, litres		
32.4	Volume of oil in each radiator, litres		
32.5	Total volume of oil in radiators,		

	litres		
32.7	Transformer total oil volume, litres		
33.0	Shipping Data		
33.1	Weight of heaviest package, kG		
33.2	Dimensions of the largest package (L x B x H) mm		
34.3	Tests		
34.1	All in process tests confirmed as per Cl. (Yes/ No)		
34.2	All Type Tests confirmed as per Cl. (Yes / No)		
34.3	All Routine Tests confirmed as per Cl. (Yes/ No)		
34.4	All Special Tests confirmed as per Cl. (Yes/ No)		

Schedule B Guaranteed Technical Particulars of Transformer Oil

Bidder to submit hard copy duly filled & signed along with techno commercial offer.

Bidder to submit separate GTP for each type of insulating oil –

Sr No	Item description	Specification requirement	Data by Vendor
1.0	Manufacturer Name		
1.1		Address	
1.2		Contact person	
1.3		Contact telephone no	
2.0	**Function**		
2.1	Viscosity		
2.1.1	Viscosity at 40^0C	15 mm^2/s, Max	
2.1.2	Viscosity at 0^0C	1800 mm^2/s, Max	
2.2	Pour Point	- 10^0C, Max	
2.3	Water content	30 mg/Kg, Max	
2.4	Breakdown voltage		
2.4.1	New unfiltered oil	30 kV, Min	
2.4.2	After filtration	70 kV, Min	
2.5	Density at 20^0C	0.895 g/ml, Max	
2.6	Dielectric dissipation factor at 90^0C	0.005, Max	
2.7	Particle Content	Manufacturer to specify the data	
3.0	**Refining/Stability**		
3.1	Appearance of oil	Clear, free from sediment and suspended matter	
3.2	Acidity	0.01 mg KOH/g, Max	
3.3	Interfacial tension at 27^0C	0.04 N/m, Min	
3.4	Total sulphur content	Manufacturer to specify the data	
3.5	Corrosive sulfur	Not-corrosive	
3.6	Potentially Corrosive sulfur	Not-corrosive	
3.7	DBDS	Not detectable (<5 mg/kg)	
3.8	Inhibitor	Not detectable (<0.01%)	
3.9	Metal Passivator	Not detectable (<5 mg/kg)	
3.10	Other additives	Manufacturer to specify the data	
3.11	2-furfural and related Compounds content	Not detectable (<0.05 mg/kg) for each individual compound	
4.0	**Performance**		
4.1	Oxidation stability, test duration 164 h		
4.1.1	Total acidity	1.2 mg KOH/g, Max	
4.1.2	Sludge	0.8%, Max	
4.1.3	DDF at 90^0C	0.5, Max	
4.2	Gassing Tendency	Manufacturer to specify the data	
4.3	ECT	Manufacturer to specify the data	
5.0	**Health,safety and Environment**		

Sr No	Item description	Specification requirement	Data by Vendor
5.1	Flash point	135^0C, Min	
5.2	PCA content Max	3%, Max	
5.3	PCB content	Not detectable (<2 mg/Kg)	

Schedule C Recommended Spares (Data by Seller)

List of recommended spares as following –

Sr No	Description of spare part	Unit	Quantity
1		No	
2		No	
3		No	
4		No	
5		No	
6		No	

BSES

Technical Specification

Of

Substation Automation system (RTU/SCADA)

Specification no – BSES-TS-311-RTU/SCADA-R2

Rev:		2
Date:		21 Nov 2025
Prepared by	Aditya Uniyal	
Reviewed by	Sentil Kumaran K A	
Reviewed by	Shanmugam B	
Approved by	Bhuwanesh Dwivedi	

Contents

1.0 SCOPE 3
2.0 CODES AND STANDARDS 3
3.0 CYBER SECURITY 5
4.0 PANEL CONSTRUCTION 7
5.0 CABLES CONNECTORS ACCESSORIES 10
6.0 TERMINAL BLOCKS 16
7.0 PAINT 18
8.0 NAMEPLATES AND MARKINGS 18
9.0 EARTHING 19
10.0 RTU PANEL 20
11.0 MANAGED ETHERNET SWITCH 27
12.0 INTERPOSING RELAY / CONTRACTORS /AUXILIARY RELAY 29
13.0 CONTROL RELAY PANEL (CRP) 31
14.0 GLOBAL POSITIONING SYSTEM (GPS) 33
15.0 RTU PANEL ACCESSORIES 33
16.0 APPROVED MAKES OF COMPONENTS 34
17.0 DEVIATIONS 35
18.0 DRAWINGS AND DATA SUBMISSION MATRIX 35
19.0 QUALITY ASSURANCE, INSPECTION &TESTING 36
20.0 PACKING 38
21.0 SHIPPING 39
22.0 HANDLING AND STORAGE 39
23.0 ABBREVATIONS 40
24.0 ANNEXURE – A, B, C, D, E 41

1.0 SCOPE

- The scope of this document includes the detailed specifications of RTU Panel, RTU data Acquisition modules ,SAS Communication Network panel, communication network hardware , Control cables, connectors , SCADA adaptation materials , Software licenses ,standard communication protocols, Station Bus Communication network architecture, Signal data types, Signal interfacing, RTU & SAS Data engineering, Erection , Testing and commissioning procedures as per IS/IEC Standards, OT security, time synchronization, standardized signal list of all the assets of EHV Grid Station, Standardized Bill of Quantity etc
- Scope of this document also covers the specifications of testing and measurement equipments.
- The Scope of this document covers the Factory Acceptance Test standard procedures and checklist , Site Acceptance Test procedures and checklists.
- The Scope of this document also covers the Warranty /Guarantee clauses, Quality & safety assurances.
- The supply of RTU materials – RTU with Processors (Basic License IEC 870-5-101/103/104(latest edition), MODBUS, IEC 61850-8-1/2 (latest edition), IEC -104 Master, IEC 104 Slave + PLC License along with IO Modules. Other accessories such as communication rack, power supply modules, MFM, GPS, converters for DC to DC & Other FO converters, cables – FO, CAT-6, RS485, control cables and connectors, sensors, server storage SD cards if any shall be in RTU vendor's scope of supply.
- RTU Shall be designed & manufactured in accordance with IEC, IEEE, ANSI & NEMA.

2.0 CODES AND STANDARDS

RTU, SAS system, panels, cables and accessories strictly designed and manufactured in accordance IS/IEC standards & purchaser requirements for the smooth running of the primary system equipments for proper power distribution.

Sl no.	Heading	Function Description
2.1	IEC 60870	International Standard for telecontrol systems used in Power systems Automation
2.2	IEC 62351-3	Standard for securing TCP/IP based communication protocols
2.3	IEC 62443-4-1	Standard for implementing a Secure Development lifecycle
2.4	IEC62443-4-2	Standard for Technical security requirements for IACS components
2.5	IEC 61000-4-2	Standard on Immunity against Electrostatic Discharge.
2.6	IEC 6100-4-3	Standard on Immunity against Electromagnetic Fields
2.7	IEC 6100-4-4	Standard on Immunity against Electrical fast transients

2.8	IEC 6100-4-5	Standard on Immunity against Electrical Surges
2.9	IEC 6100-4-6	Standard on Immunity against Electromagnetic Compatibility testing and measurement
2.10	IEC 6100-4-18	Standard on immunity requirements, test and measurement techniques of electrical and electronic equipments.
2.11	IS 1554 Part-1	Standard for PVC insulated heavy duty control cables
2.12	*IS 5578/198*	Indian standard for marking of insulated conductors
2.13	EIA/TIA 568 C-2	Standard for Twisted Pair telecommunication Cables CAT6 etc
2.14	IEC 60603-7-4	Standard for CAT6 Connectors
2.15	EIA/TIA-485	Standard for Twisted Pair telecommunication RS485 cables etc
2.16	IEC 11801	Standard for cabling systems within premises
2.17	IS 12943:1990, IEC 62444	Standard for Brass glands for PVC Cables
2.18	IEC61850-3	Standard to ensure interoperability of communication infrastructure in substation Automation systems.
2.19	IEEE 1613	Standard for environmental and testing requirements for IED's in substation automation
2.20	IEC61537, ISO 9227	Standard for perforated cable trays
2.21	IEC 62053-22	Standard for electricity metering equipments
2.22	IS14697	Indian Standard for Meters (0.2S & 0.5 class)
2.23	IEC60529	**International Standard that defines the Ingress Protection**
2.24	IEC 61326	Standard for EMI/EMC requirements of electrical equipments
2.25	IEC 61010	Standard for Safety of Measurement, control equipments, Laboratory requirements etc
2.26	DIN41494	Defines Specifications for 19" equipment mounting
2.27	IEC62053	Standard for Power Meters
2.28	IS5831:84, IS8130, IS1554-1, IS3975	Standards for Signal and Control Cables

3.0 CYBER SECURITY

Sl no	Heading	Function description
3.1	Reference Standards	IEC20243, IEC62443-4, IEC62351, ISO/IEC 27001, IEC:27036 and other relevant standards of IS/IEC/ANSI/IEEE,etc must be incorporated and Rules & Standards of Govt. of India, Ministry of Power/Other Central, State Departments & International best practice on Cyber security in Electrical Power Systems.
3.2	Policies	1. **Network Segmentation** – Isolating IT network from grid station automation OT Network. 2. **Asset Management** – Patch and firmware management. 3. **Layered Security-** creation of VLAN's, RBAC, TLS , RADIUS /TACACS based Authentication. 4. **Secure remote access** 5. **Remote monitoring** 6. **Incident Response and recovery**
3.3	OT security threats	Malware/ Ransomware, Phishing, Distributed Denial of service, Network intrusion, Supply chain attacks, Insider Threats, Advanced persistent threats, legacy systems
3.4	OT Security systems	Firewalls (Grid connected Router and RTU –inbuilt), RBAC, IPS/IDS systems, RADIUS/TACACS based authentication etc
3.5	Critical Assets	SCADA, Grid Routers, modems, RTU, Ethernet Switches, GPS, IED's, Meters, sensors , HMI, related operating systems ,Softwares, firmwares etc
3.6	Type test reports IEC:62443, IEC:62351 (India made devices)	The IEDs, RTU, FRTUs, PLCs, SCADA, Communication network switches, any related programmable software's/hardware's, etc systems that involved in electrical power sector for control & monitoring critical information shall be verified for a sample size for testing minimum one number from each make, type and having same firmware version for the supply one lot size of 200 numbers or less.
3.7	Type test reports IEC:62443, IEC:62351 (India made devices)	The Smart meters, other energy meters the sample six for testing shall be minimum one number for each make, type and have same firmware version for the supply one lot size of 5000 numbers or less.
3.8	Type test reports IEC:27036 IEC:62443 IEC:62351 IEC:20243 (Other country made devices)	The IEDs, RTU, FRTUs, PLCs, SCADA, Meters, Communication network switches, any related programmable software's/hardware's, etc systems that involved in electrical power sector for control & monitoring critical information for importing products/system shall be verified for a sample size 5% of the supply lot for each make, type and having same firmware version for the supply lot.

3.9	RTU domain cyber security terms & conditions	As the RTU/SCADA system will use public domain, such as LAN/VSAT/GPRS/CDMA/SATELLITE based networks for communication media, therefore it is mandatory to guard the data / equipment from intrusion/damage/breach of security & shall have SSL/VPN based security.
3.10	IED'S like Protection devices, Control devices.	Communication protocol conformance standards shall be followed as per IEC 61850-5 to IEC 61850-10 and respective clauses.
3.11	RTUs,FRTUs,SCADA, PLC, etc with IEC communications.	Communication protocol conformance standards shall be followed as per IEC:60870-5-101/ IEC:60870-5-103/ IEC: 60870-5-104 and respective clauses.
3.12		Protocol Security conformance standards shall be followed as per IEC:60870-7, IEC:62351-100 part1&3 and respective clauses.
3.13	Smart meters with IEC 62056	Protocol Security conformance & Communication protocol conformance standards shall be followed as per IS:15959 series, IS:16444 series and respective clauses.
3.14	Mandatory tests case	The test is referencing a clause that is mandatory in IEC: TS 62351-5, IEC: TS 60870-5, IEC: 62351-3 which defines the requirements related to the authentication/encryption protocol, procedures and methods to be implemented at Fiber, TCP/IP(transport) level, Modbus, etc.
3.15	Approved/ Designated Laboratories	Central Power Research Institute (CPRI) approved laboratory for IEDs, RTU, FRTUs, SCADA, PLC systems. Central Power Research Institute (CPRI) Electrical Research & Development Association (ERDA), Yadav Measurements Pvt Ltd(YMPL) for Smart meter devices. If any other departments if approved shall be as per Ministry of Power/Other related departments for confirmation of Cyber security in power systems. If any changes according to Govt.rules/notifications/MoP,etc the same shall be incorporated time to time without cost implications.
3.16	Miscellaneous	Words and expressions used and not identified in these above regulations but defined in the information technology Act 2000 and the Electricity Act, 2003 shall be followed for cyber security of power system time to time.
3.17	Certificates Validity	Product certifications/type test reports of any Electrical/Electronic devices connected in power systems for respective protection/functions/controls/monitoring shall not be older than 5 years during supply of same items.
3.18	Reports	All necessary type test reports, certifications shall be submitted for RTU panel/ Equipments at Pre Bid / Engineering/ Inspection by supplier/vendor.
3.19	RTU Processor	RTU Processor with enhanced cyber security features, SNMPv3, https, SSL and TLS based encryption for 104 communication and shall comply with IEC 62351-3, IEC 62443-4-1, IEC62443-4-2 std for cyber security

		requirements for Industrial OT systems.

4.0 PANEL CONSTRUCTION

Sl no.	Heading	Function Description
RTU Panel		
4.1	RTU materials	RTU Panel, RTU Chassis, Data Acquisition modules ,Power supply, Voltage Converters, Ethernet switches, GPS,surge protectors for Ethernet, Serial ,analog channels, Terminal blocks , Contactors, Fuse terminal Blocks , Internal cabling
4.2	Panel Type	Freely standing ,floor mounted Swing frame cabinet, front toughened glass, Simplex panels with Height: min.2200mm, Width: min.1000mm to max.1200mm and Depth: min.800mm and Total Height: min.2315mm (Inc. AV pad and Base frame). Size of panel shall be decided during engineering.
4.3	Enclosure type	Dust, moisture and vermin proof. Degree of protection not less than IP54 in accordance with IEC 60529
4.4	Enclosure material	Pre-galvanized, cold-rolled sheet steel of thickness not less than 2mm. Stiffeners shall be provided wherever necessary.
4.5	Doors	Double leaf doors shall be provided at the rear. Doors shall have handles with built-in locking facility. Doors hinged with padlocking type / Locks of the door shall be lever type(min 130º hinges). Door handles shall be of protruding type with three point locking facility as per industrial standards of IS/IEC.
4.6	Thickness of steel sheet	All non-load bearing panels/doors, top and bottom portion, rear cover shall be fabricated from minimum 2.0mm thickness steel sheet and all load bearing panels, frames, top & bottom panels shall be fabricated from minimum 3.0mm thickness steel sheet.
4.7	Mounting plates	Wiring between stationary and movable parts such as wiring across RTU swing frame shall allow the full movement of the frame without bending of the wiring. Cable spiral dressings shall be used for such crossovers
4.8	Drawing placement	In each panel door shall be equipped with >A3 size steel pocket for wiring plan/scheme drawing/ test report, maintenance register, FAT, SAT reports, SOP, placement and removals with safe hands by human.
4.9	Gland Plate	At least four separate gland plates of removable type with gasket shall be provided for each panel. They shall be of sheet steel of thickness not less than 3 mm.
4.10	Cable Entry	All panels shall have provision for bottom cable entry.
4.11	Gaskets	All doors, removable covers of panels shall be fitted with

		long life Rubber Gaskets all around with synthetic Neoprene/EPDM gaskets as per IS:11149 for sealing. However, XLPE gaskets shall be for fixing protective glass doors.
4.12	Cooling	All panels should have air cooling with FAN with Filters / Louvers mounted on rear side of RTU panel with temperature / humidity control facility.
4.13	RTU Air-conditioning	RTU Panel should have inbuilt Air conditioner & AC should be mounted on side wall of RTU panel with temperature/humidity sensor, fan with filter shall be considered as a backup. Rating of Air conditioner shall be decided by OEM as per their configurations.
4.14	Foundation	The panels shall be fixed on the embedded foundation channels with intervening layers anti vibration strips made of shock absorbing materials.
4.15	Base Frame	Base frames shall be supplied along with panels. 100mm channel painted black.
4.16	Mounting	RTU Racks/ Chassis , Ethernet Switches, MCB's , GPS etc shall be flush mounted on the swing frame.
4.17	Device access	All panels shall have maintenance access to the hardware and wiring through lockable full height doors.
4.18	Appearance	Powder coating finishing frame Outer: RAL7032(Siemens Grey), Inner: RAL9003 (Glossy white).Front door should be fixed with shock proof full height toughened glass. Panel to be made shock absorbent using rubber gasket.
4.19	Panel illumination	All panels should be provided 240V AC illumination lamp with white LED lights 15W~20W rating at front and rear for illumination. Limit switches should be provided on the doors to control the switching.
4.20	Heater Circuits	All panels should be provided with heater, thermostat, hygrostat for controlling moisture and should be installed on safe location inside the panel.
4.21	Auxiliary power	All panels shall be supplied with 230V AC, 50Hz Single phase, 6A switches & duplex socket arrangement for maintenance. The same shall be flush mounted on swing frame.
4.22	Power Socket and switch	240V, 5/15A universal type socket to be provided in each panel with on-off switch.
4.23	MCBs and Fuses	Provision for receiving, distribution, isolation and fusing of DC and AC supplies to various control circuits should be made using MCBs, RCDs, RCCBs, of appropriate ratings as per purchaser requirements.
4.24	Edges/Corners	There shall be no sharp corners or edges. All edges shall be rounded to prevent injury.

4.25	Panel Size & Hardware capacity space for future use	The RTU system shall have the capacity of accommodating additional 50% of the basic I/O counts by addition of hardware such as modules, racks, panels, Terminal blocks of basic I/O counts.
4.26	Cable dressing	Plastic channels of suitable sizes to be used as enclosures. PVC sleeves to be used for inter-panel wiring.
4.27	Inter panel wiring	When panels are arranged to be located adjacent to each other inter panel wiring of common bus wires between the panels should be supplied with one end terminated and the other end bunched and coiled with proper lugs crimped and insulation for safe handling at site. Inter panel wiring shall be clearly indicated in the wiring tables. Longitudinal troughs extending throughout the full length of the panel shall be preferred for inter panel wiring. Inter-connections to adjacent panel shall be brought out to a separate set of terminal blocks located near the slots of holes meant for taking the inter-connecting wires. Wiring termination at interface panel end shall be through prefabricated plug-in type connectors.
4.28	Logo & labels	BSES logo shall be fixed at Top - left of panel. Printed metallic name plate with engrossed purchase order details to be fixed on front top right corner of RTU Panel. All equipments shall be labeled.
	Ethernet Switch Panel	
4.29	Panel type	Simplex type wall mounting for Indoor application.
4.30	Door	Full toughened Glass front door, turning angle 160º with Lock provided.
4.31	Sheet steel	CRCA sheet steel with load bearing/non-load bearing – 2mm thickness. Welded frame, reliable structure, material quality cold rolled steel.
4.32	Dimension	Panel Widthx600mm, Heightx625mm, Depthx600mm and above.
4.33	Panel	Panel shall have cable management panels, trays and channels to keep wires neat and organized reducing the risk of overheating due to improper ventilation
4.34	Coating	Powder coating finishing frame Outer: RAL7032(Siemens Grey), Inner: RAL9003 (Glossy white)
4.35	Mounting arrangement	Mounting angle should be 19’ inches and made of formed Steel.
4.36	Cable	Cable 1100V grade Multistrands FRLS PVC.
4.37	Cable Routing & Interconnections	AC/DC Source circuit terminal block: 2.5 SQ.MM
4.38	Cooling Fans	Fan with louvers shall be provided.
4.39	Signal Earth and Safety Earth	Within the RTU Panel Safety Earth and Signal Earth strips/bars shall be physically isolated from each other

		and marked/color coded . Safety Earth strip and wires shall be color coded to Green with yellow stripes , however the signal earth strip and wires shall be color coded to pink or as per manufacturers practice.Two earth strips of Size 500mmx25mmx4mm copper with prefitted screw terminals shall be used for the same. The signal Earth wires of Size 2.5 sqmm multistanded copper shall be connected to signal Earth strip while 4 sqmm multistranded copper shall be used for Safety Earth within the panel . Signal Earthing Strip/bar shall be mounted on insulators of suitable rating.
4.40	Enclosure	All materials used in the enclosures including cable insulation or sheathing, wire troughs, terminal blocks, and enclosures trims shall be made of flame-retardant material and shall not produce toxic gases under fire conditions.
4.41	Logo	BSES logo shall be fixed at Top - left of panel and PO details on the top right.

5.0 CABLES CONNECTORS ACCESSORIES

Sl no.	Heading	Function Description
5.1	**Internal wiring**	
5.1.1	DC Source circuits	2.5 mm^2 multi-stranded copper 1.1KV grade cable, HRPVC insulation, color coded (Red for +DC and Black for –DC). .
5.1.2	AC Source circuits	2.5 mm^2 multi-stranded copper 1.1KV industrial grade cable HRPVC insulation, color coded (Blue for Phase and White for Neutral).
5.1.3	DI, AI & DO RTU internal wiring	Sizes and color as per OEM standards for internal RTU wiring.
5.1.4	Earthing connections	2.5 SQMM FRLS 11KV PVC multi-stranded flexible copper wire,color coded green with yellow stripe for equipment body earth
5.1.5	Other Circuits	Unless otherwise specified shall be of 2.5 SQ.MM
5.1.6	DC Safe wiring methodology	Panel wiring shall be securely supported, installed by lacing, tying, readily accessible and connected to equipment terminals and terminal blocks. Accidental short circuiting of certain wires is likely to result in malfunction of equipment, such as CB

		closing/tripping of or Positive/Negative wires, these wires shall not be terminated on adjacent terminal blocks (Except source input DC positive/negative terminals).
5.1.7	General	Maximum of two wires shall be at one side of terminal block allowed. Not more than two wires shall be connected to any terminals such terminal block, relay contacts, auxiliary relay, etc where ever wiring connected in RTU panels. If necessary additional looping with adjacent terminal blocks shall be allowed as per scheme requirements
5.1.8	FO Patch Cable dressing	The FO patch chord between inter-panel and within the panel shall be run through separate and labelled troughs inside panels and flexible PVC conduits for cross section between panels, Ethernet switch sides, Numerical relays side with proper insulations.
5.2	**External cabling**	
5.2.1	DI cable for digital Input Signals	Cable to be used for interfacing digital input signals from Control and relay panels to RTU shall be Armoured, FRLS, 8C/10C/12C/16C as per requirements ,1.5 mm^2 multi-stranded bare copper,HRPVC labelled (in both numerical and word).Dielectric withstand 2.5kV at 50 Hz for 5 minutes. Shall comply with IS5831:84, IS8130, IS1554-1, IS3975.
5.2.2	DO cable for digital Output Signals	Cable to be used for interfacing digital output signals from Control and relay panels to RTU shall be Armoured,FRLS, **6C/8C** ,1.5 mm^2 ,twisted pair, individual pair screened,multi-stranded bare copper,HRPVC, labelled (in both numerical and word).Dielectric withstand 2.5kV at 50 Hz for 5 minutes. Shall comply with IS5831:84, IS8130, IS1554-1, IS3975
5.2.3	AI Cable for Analog signals	Cable to be used for interfacing Analog input signals from Control and relay panels to RTU shall be Armoured, FRLS,, shielded, 6 core ,1.5 mm^2 ,twisted pair, individual pair screened(foil), multi-stranded bare copper, HRPVC , labelled (in both numerical and word).Dielectric withstand 2.5kV at 50 Hz for 5 minutes. Shall comply with IS5831:84, IS8130, IS1554-1, IS3975
5.2.4	**RS485 (Armoured & Unarmoured)**	
5.2.4.1	Dielectric	Dielectric withstand of 1KV, 50Hz AC for 1 min

5.2.4.2	Pair	2 pair Twisted , 22 AWG(7x32), Tinned copper, PE insulation, Overall Beldfoil + tinned copper braided (min 90%) shielded, PVC outer jacket.
5.2.4.3	Impedance	Characteristics impedance shall be 120Ω.
5.2.4.4	Capacitance	Capacitance between conductors shall be less than 100pF/mtr. Conductor and shield shall be less than 200pF/mtr.
5.2.4.5	Approved make/model	Belden – 129842 (Armored RS485), 9842(Unarmored) or equivalent specifications subject to approval.
5.2.5	**CAT 6 (Armoured & Unarmoured)**	
5.2.5.1	Physical Characteristics	(i) 4 pair, 23 AWG, solid bare copper conductors, twisted pair separated by full X shaped separator, high density polyethylene insulation, Beldfoil shield, tinned copper drain wire, tinned copper braided shielded, CMR rated jacket... Outer sheath Material should be Low Smoke Zero Halogen(LSZH).
5.2.5.2	Electrical Characteristics	Conductor Resistance ≤9.3Ω/100m,Insulation resistance 100MΩ.Dielectric strength 1KV DC/0.75KV AC for 1 min, Mutual Capacitance≤5.6nF/100m, Resistance unbalance: 5% Max, Max operating Voltage - 72V
5.2.5.3	Operating temperature range	Operating temp -20°C to 75°C.
5.2.5.4	Marking	Each meter cable labeled with sequential counter. Cable diameter 6.1mm nominal.
5.2.5.5	Compliances	Meets TIA/EIA 568-C.2 requirements and comply with complaint for 10/100/1000 MBPS bandwidth. CAT 6 cable should be UL Listed and ETL verified and RoHS Compliant. CAT 6 cable should meet ISO/IEC 11801 for CAT 6 requirements, *IS 5578/198 for labling and color coding*
5.2.6	**Fiber Optic Cables**	

5.2.6.1	Armoured FO cable	(i) Multimmode Armoured multimode (OM1) with Corrugated polymer coated Steel tape Unitube LSZH FO cable, Fiber Count 6 NOS , 62.5/125µm. (ii) Operating temp: -60°C to +80°C (iii) Max Tensile load: Short Term; 2700N, Long term : 800N (iv) Cable OD: 12.5mm ±5% (v) Cladding Diameter: 125±1µm. (vi) As per standards IEC 11801,EIA/TIA 568B (vii) Approved make: Preston or equivalent
5.2.6.2	Un-Arrmoured FO cables	(i) Ruggedized FO -Inter panel inside CRP & RTU (ii) Armoured FO –Spiral SS steel tape- from 11KV Switch gear IED's to RTU/SAS Switch Panel (iii) Multimode, Duplex, OM1,62.5/125µm. (iv) Insertion loss <=0.2dB (v) Should have Ceramic connector ferrule. (vi) Repeatability should be less than 0.2dB,100 mating cycle (vii) Working temperature should be -40°C to 80°C.
5.3	**Tags, Labels, ferrules**	
5.3.1	Ferrules (for DI, DO, AI, CAT 6 , RS485)	Ferrules marked to correspond with panel wiring diagram shall be fitted at both ends of each wire. Ferrules shall fit tightly on the wire. White PVC sleeve printed with black text to be used for identifying cables & signals. All ferrules to be laminated with heat shrink tubes of appropriate size.

5.3.2	Tags	Printed corrosion resistance metallic tags (High Quality aluminium – 0.5mm~0.8mm thickness) for all control, comm..cable,etc. Marking shall be made using Laser etching, engraving and the same shall be durable and resistant to fading,etc. Edges shall be smoothened to avoid cuts.
5.3.3	Tag – OFC/ FO Patch Cable	Machine generated durable labels on both end of each cable to ensure clarity, traceability, consistency. Labels must be made of material that resist environmental factors like moisture, heat , UV, abrasion resistant to ensure long lasting.
5.3.4	Labels	Labels of suitable sizes shall be used as a signs for Safety Earth, Signal Earth , FO Patch Cables , static sensitive device handle with care shall be used within the panels. Labels shall be in accordance with IEC guidelines /manufacturers /purchases recommendations during approval stages.
5.4	**Light Interface Unit (LIU)**	
5.4.1	Mounting	12 fiber (6 pair) wall mount / 19” panel mount /DIN rail LIU loaded with LC pigtails and adaptors with adaptor plates as per site requirements.
5.4.2	Steel	Aluminium / Stainless steel base material
5.4.3	LIU inner portion	LIU shall be provided with splice tray, cable spool provision inside for fiber connections.
5.4.4	Accessories	Cable ties, mounting ear screw, earthing & spiral wrap tubes shall be provided as per requirements.
5.4.5	Materials	Adaptor plate shall be made of Cold Rolled Steel material.
5.4.6	Insertion loss	Insertion loss ≤0.2dB for Zirconia sleeve.
5.5	**Cable Gland**	
5.5.1	Cable Gland	Double compression cable glands (Materials – Brass and Stainless Steel & Suitable for Industrial Grade) of different sizes for cable entry into the RTU, DCU, CRP & Other panels. The gland shall be robust and heavy duty.
5.5.2	Material	Brass as per IS-319 standard. If M.S/S.S IS:304/316)
5.5.3	Non-Armoured cable glands	Double compression cable glands for un-armoured cables providing 2 nos of environmental seal for the outer sheath of cables having universal clamping range, allowing the cable to be easily disconnected from the equipment, for maintenance and changeout, etc.

5.5.4	IS/IEC std	Gland shall comply to IS12943:1990/ IEC 62444, IEC 60529(Weather proof)
5..5.5	Temperature	Armored cable: -60ºC to +100 ºC, Un-Armoured cable: -30ºC to +100 º C.
5.5.6	Ingress protection	IP-67 weather proof glands as per IEC 60529:2001, IP-66 as per IS/IEC 60079 for armoured& un-armoured cables
5.6	**Surge Protection Devices (SPD)**	
5.6.1	Surge Protection Device (SPD) for Power supply	Pluggable on the base ,type 3 surge protection, with status indicator, din-rail mountable, modes of Protection PE,NE,PN., Maximum continuous operating voltage – 65-85 V DC, maximum discharge current 10kA-30kA.response time≤25ns,supports differential and common mode protection, industrial grade.
5.6.2	Surge Protection Device (SPD) for Serial ports	Passive surge protector, Must support RS485 differentail line .modes of Protection +D to GND, -D to GND,low insertion loss, low capacitance,nominal voltage ±12V. maximum discharge current 5kA-10kA,compliant with IEC 61643-21
5.6.3	Surge Protection Device (SPD) for Ethernet ports	Shall support 10/100/1000 Mbps,operating voltage 48VDC, maximum discharge current 10kA-30kA, low insertion loss(≤1dB), industrial grade
5..7	**RS485 to RS232 converter**	
5.7.1	Power supply	Operating power supply ranges min.24 – 60V dc source.
5.7.2	Isolation of signals	Galvanic isolation of 1kV between RS485 & RS232 signals.
5.7.3	Nodes	Should support 32nodes on RS485 side.
5.7.4	Physical wiring	RS485 interface should support both 2 wire & 4 wire signals.
5.7.5	Communication range	Communication speed / data transfer rages shall be user selectable type.
5.7.6	Mounting method	Din Rail Mounting system
5.8	**RJ 45 Connectors (for CAT 6 /6A UTP and STP Cables)**	
5.8.1	Standards	Applicable standards: ANSI/TIA 568 D.2, IEC 60603-7-4, ISO/IEC 11801 class E, EA
5.8.2	Voltage & Current levels	Max. Voltage: 250Volts, Current: 2Amps.
5.8.3	Contact Resistance	Contact Resistance< 20m Ω.

5.8.4	Contact Material	Phosphor bronze with gold plating
5.8.5	Durability	750- 1500 mating cycles
5.8.6	Operating temperature	-40°C to +85°C
5.8.4	IR value	Insulation resistance: 100MΩ.
	Cable Tray	
5.1.4	Type	Perforated, Hot dip Galvanized Iron with cover for laying all types of the cables. Installation of cable trays with accessories or trench as required for the cabling work.
5.1.5	Standard	Shall conform to IEC 61537, ISO 9227
5.1.6	Steel	Cable trays shall be made of single MS sheet
5.1.7	Dimension	Widthx300mm, Depthx75mmx Thicknessx2mm. Coupling plates shall be 3mm thickness.
5.1.8	Connections	Cable tray shall be heavy duty and perforated type with matching fittings like elbows, bends etc and accessories like bolts, nuts, washers, GI strip, hook.
5.1.9	Edge	All tray corners shall be smooth and free from sharp edges.
5.1.10	Certificates	Test certificates shall be submitted during inspection for cable tray materials and Galvanizing coating.
5.2	RTU to Substation devices hardwire connections / communications	Laying and Termination of armoured communication cables (Ethernet, Fiber Optic Patch chords/cards, FO cables, RS 485 cables) ,control cables between Grid Devices (Numerical relays, Transformer monitoring devices/modules, control & Relay panels, Smoke detectors, , NIFPS panel, MFM, Battery Charger, Battery banks to RTU/DCU/Gateway with proper tagging and dressing up to RTU panel.

6.0 TERMINAL BLOCKS

Sl no.	Heading	Function Description
6.1	Rating and Type	Terminal Blocks (TB) of 1100 V grade, continuous current rating of max.35A on the terminals and non-breakable type. Molded piece, stud type screw terminals complete with insulated barriers, melamine housing brass terminals, washers, nuts and lock nuts. Screw clamp, overall insulated, insertion type, channel/rail mounted terminals can be used in place of stud type terminals as per requirements.

6.2	Suitability	Unless otherwise specified, terminal blocks shall be suitable for connecting the following conductors of cable on each side- a. All circuits including current / voltage transformer circuits: 6mm^2 flexible copper. b. AC / DC power supply circuits: one no of 10 mm^2 Al(aluminum)./ 6 mm^2 flexible Cu(copper).
6.3	Marking and covers	White fiber markings strip with clear plastic, slip-on / clip-on terminal covers to be provided andA reflective prints on HIP(High Intensity Prismatic) films which contain lens to reflect at night when light shines with clear plastic, slip-on / clip-on terminal covers to be provided in yellow stickers.
6.4	Disconnecting Facility	To be provided in AC, DC source terminals.
6.5	Shorting & Earthing Facility	To be provided at earthing terminals.
6.6	Terminal Segregation	TBs shall be segregated by application i.e separate terminal blocks shall be provided for each application.
6.7	Vertical clearance with gland plate	Minimum 250mm.
6.8	Clearance between two rows of TBs	Minimum 150mm.
6.9	TB contact materials	The terminal shall be such that maximum contact area is achieved when a cable is terminated. The terminal shall have a locking characteristic to prevent cable from escaping from the terminal clamp unless it is done intentionally. The TB conducting part in contact with cable/wire shall be preferably tinned/silver/nickel/copper/zinc shall be preferred.
6.10	Arrangement	Arrangement of the terminal block assemblies and the wiring channel within the enclosure shall be such that a row of terminal block runs in parallel and close proximity to each side of the wiring duct. The side of the terminal block opposite the wiring duct shall be reserved for the external cable connection.
6.11	Categorization	For ease of external connections, terminal blocks shall be categorized based on their usage i.e all terminals for wiring of particular equipment like circuit breaker should form one terminal block.
6.12	Tightness	The Terminal block wiring shall be tight with respect to its function as per standard Torque limit wherever applicable as per IS/IEC Std and OEM recommended values.
6.13	Spare Terminals	20% in each TB row. The spare terminals shall be provided with lugs mounted on it.

7.0 PAINT

S.No.	Heading	Function Description
7.1	Paint Type	Powder coated. Pure Polyester base grade-A, structure finish.
7.2	Paint Shade	Exterior: RAL 7032 “Siemens Grey”.
7.3	Paint Shade	Interior: RAL 9003“Glossy White”.
7.4	Paint Thickness	Minimum 70 microns.

8.0 NAMEPLATES AND MARKINGS

S.No.	Heading	Function Description
8.1	Nameplates	To be provided as per the following description.
8.2	Equipment Nameplates	a. All equipment mounted on front side as well as equipment mounted inside the panels shall be provided with individual name plates with equipment designation engraved. b. All front mounted equipment shall be also provided at the rear with individual name plates engraved with tag numbers corresponding to the one shown in the panel internal wiring to facilitate easy tracing of the wiring.
8.3	Feeder Nameplates	(a) Large and bold name plate carrying the feeder identification numbers shall be provided for circuit / feeder designation on the top of each panel on front as well as rear side. (b) Rear bottom of each panel shall have a nameplate clearly indicating the following: (i) Purchaser Name (ii) BSES, PO No. & date (iii) Drawing Reference No (iv) Voltage Level, Bay No (v) Panel Serial No (vi) Year of Manufacture (vii) Control Voltage (viii) Customer care No
8.4	Material	Non-rusting metal or 3 ply lamacoid. Nameplates shall be black with white engraving lettering with reflection Or Reflective Stickers are allowed which have a reflective prints on HIP(High Intensity Prismatic) films which contain lens to reflect at night when light shines on them [Suitable text/background colours] with suitable base material fixture.(shall be discussed during engineering stage).
8.5	Fixing	All nameplates/rating plates shall be riveted to the panels at all four corners. Bolting/screwing is not acceptable.

8.6	Markings	Each switch shall bear clear inscription identifying its function. Similar inscription shall also be provided on each device whose function is not otherwise identified. If any switch or device does not bear this inscription separate nameplate giving its function shall be provided for it. Switch shall also have clear inscription for each position.

9.0 EARTHING

Sl no.	Heading	Function Description
9.1	Panel Earthing	All panels shall be equipped with an earth bus securely fixed.
9.2	Location of earthing bus	Earthing bus shall be as per BSES/OEM recommendations.
9.3	Material	The material and the sizes of the bus bar shall be 25 x 6 mm copper flat unless specified otherwise. Bimetallic strips shall be provided in order to connect external earth grids as per site requirements. (if required)
9.4	Earth Bus joints	All bolted joints in the bus should be connection of two bolts.
9.5	Hinged Doors	Earthed through flexible copper braid wires of at least $16mm^2$.
9.6	RTU & Instruments earthing	All metallic cases of relays, instruments and other panel mounted equipment including gland plate, shall be connected to the earth bus by copper wires of size not less than 2.5 mm^2. The color code of earthing wires shall be yellow-green. The earth wire connecting at earth bar with copper bolt & nut. Each panel shall be provided with additional copper bolt & nuts throughout the earth bus bar with space between each bolt & nut. Only two wires permitted for each earth connection at a time.
9.7	Electronics Earth Pit / Earth riser	All RTU, IT, DCU, Cyber security, CCTV, other Electronics products shall be equipped with Electronics Earth pits (min.2 no) separately as per IS standards, Industrial standards of practice.
9.8	RTU Grounding	The Safety ground shall be isolated from the signal ground and shall be connected to the ground network. Safety ground shall be a copper bus bar. The contractor shall connect the panel's safety ground to the grid ground network. Separated (2 Pits) is created for communication equipment and signal ground shall be connected to the communication equipment signal ground. The grid station should be at equipotential.

10.0 RTU PANEL

Sl no.	Heading	Function Description
10.1	**REMOTE TERMINAL UNIT / SCADA / SAS system**	
10.1.1	General	RTU should have been designed and manufactured in accordance with the standards laid down by IEC (international Electro-technical Commission), IEEE, American National Standards Institute ANSI and National Equipment Manufacturers Association (NEMA) for industrial automation systems. Act as a Data Concentrator Unit (DCU) on IEC60870-5-101/104/MODBUS/IEC61850 protocols and support for IEC 50870-5-103, IEC 60870-5-101, IEC 61850 (latest edition), MODBUS TCP IP and RS485 MODBUS RTU protocols & ability to act as a gateway for numerical relays.
10.2	**RTU Processor Module**	
10.2.1	Temperature	RTU processor operating temperature range -25ºC to 75 ºC, RH 5 – 95% non condensing.
10.2.2	Self-diagnosis	RTU shall be able to detect internal failures and same shall be transmitted to SCADA as a soft signal. A watchdog relay with changeover contact shall provide information about the failure for annunciation. Any binary input & output contact failure by internal an event shall be provided as alarm & report to SCADA. The IRF shall not be generated in such cases. Watchdog should be other than BO count. Two watchdog contact shall be provided as per purchaser requirements.
10.2.3	Power fail backup	Li Battery/CMOS Battery or equivalent to back up the data/time in NVRAM in case of power failure.
10.2.4	RTU Processor communication protocol	IEC 61850-1/IEC 61850-9-2LE (latest version) server & client, IEC 61850-9-2/IEC 61869 (latest version) Flexible streams, IEC 60870-5-103(Master), IEC 60870-5-104(Master & Slave), MODBUS RTU Master, MODBUS TCP client, DNP 3.0 Serial/TCP, IEEE C37.94**,** IEEE 802.1X VLAN, LON, SPA, etc.(latest version of IEC Standard, IEEE standard) shall be provided as per site & BSES requirements.
10.2.5	MCC & BCC communication	Main processor (DCU)/RTU should have adequate capacity for data handling / processing and main processor/CPU must have required number of communication ports for simultaneous communication with Master stations (MCC & BCC) / MFTs and RTU configuration & maintenance tool.
10.2.6	IEC-60870-104	RTU need to be installed for interface of substation devices and control centers (Main and Backup) through IEC-60870-104 protocol.
10.2.7	Main processor HOT Redundancy	RTU main processor/Gateway must have HOT Redundancy features for control center communications.

10.2.8	Software License Capacity	The RTU software permanent license shall have the minimum capacity PLC (5000dp), Archive data points to configure min.10,000 data points in SD memory and to configure minimum 150 IED's through IEC 61850 client server protocol.
10.2.9	Multiple User software license	All associated equipment's and supply of accessories including software and operating tool / multiple user licenses for RTU shall be provided as per BSES requirements only.
10.2.10	Capability	Processor with capability of integration of 5000 DP or more
10.2.11	Time sync	RTU shall synchronize primarily with the GPS receiver system available in RTU through PTP & secondarily through time sync messages sent from SCADA MCC through IEC 104.
10.2.12	Capacity for IED handling	RTU processor must have the capacity of integration of minimum 150 IED's over IEC61850-9-2 and above (or Latest Edition) protocol according to substation design and IED's protocol communication standards.
10.2.13	Configuration features	CPU / DCU/ RTU software configuration future (Communicate to multiple master stations (min.05) simultaneously on IEC 60870-5-104.
		RTU / DAU must have multiple location (minimum 5 Location) data transmission facility viz Master Control Center, Backup Control center, etc.
10.2.14	Flash card	Processor with flash card 2GB or more for configuration storage file and SOE buffered events storage (around 1000dp) and archive data storage.
10.2.15	RBAC	Password protection with Role Based Access Control
10.2.16	Configuration port	RTU processor should have software configurable RS485/RS232 ports with configurable baud rates from 300 to 115200 bps.
10.2.17	Data base	Remote data base, downloading of RTU from Master Station / RTU/SCADA Control center.
10.2.18	Auto-Restoration	RTU shall have the capability of automatic start-up and initialization following restoration of power after an outage without the need for manual intervention. All restarts shall be reported to the connected master stations.
10.2.19	Hot & Stand by Redundancy	Hot redundancy is required for Main processor modules, Rack board, PSU and Gateway for MCC & BCC communications. Each main processor must have two Ethernet ports dedicated for communication with RTU/SCADA servers over IEC 60870-104 protocol.
		While First Module will be live, redundant should be hot standby and vice versa.
		Communication switchover between either module in case of failure. Main processor module along with Rack for MCC communication should be separate from the IO cards.
10.2.20	Processor Modules Coating	All modules (Power/Processor/IO/AI/server) must have conformal coating to protect against moisture, dust, chemicals

		and harsh environments. Coatings shall also protect relays against corrosive gases such as H_2S or SO_2other gases for safe & reliable function of Hardware/Firmware/Comm. modules.
10.2.21	RTU size	RTU size will depend on the size of the substation, number of the feeders, number of signals and command outputs along with sufficient spares for future requirements.
10.2.22	Clock resolution	RTU processor module shall have the internal clock with minimum time resolution of 10ms.
10.2.23	Protection devices / IED's	All numerical relays, protection devices for RTU – All modules (all Analog input modules, Digital Input/output modules) and ports (Serial and Ethernet ports) must have in-built or external surge protection devices and optical isolation.
		RTU communicate with numerical relays on IEC 61850 protocol is required; however the options for IEC-60870-103 protocol along with MODBUS protocol option if required for other devices integrations. Numerical relays can be make of Hitachi energy, Siemens, Schneider Electric, GE, ABB, ASHIDA, SEL, etc. make is depending on the type / make of CRP panels, Switchgear panels, RMU, FRTU, etc.
10.2.24	Environmental requirements	RTU CPU and other Data Acquisition modules shall confirm to EMC requirements as per IEC61000-4-2/3/4/5, IEC61000-4-18 for EMI/EMC, ESD and other environment immunities. Test reports and test certificates to be furnished for the same.
10.2.25	Additional I/O cards	Offered RTU system shall be suitable for extension in future for additional bays/IO's. During such requirement all the drawings, configuration shall be designed in such a manner that for extension seamless effort is required.
10.2.26	LED indication	Modules must have LED indications to provide status and diagnostic information.
10.2.27	RTU Module	Each RTU processor module shall be short circuit proof and shall be protected by fast blow glass fuse/MCB's.
10.2.28	I/O module diagnostic	All the I/O module, I/O cards shall have the diagnostic feature for sensing the channel failure, card failure.
10.2.29	Architecture	Hardware and software architecture shall be modular and dis-connectable to adapt to the required level of complexity as per the application.
10.2.30	RTU operation with primary system	The RTU's shall be carefully designed such a way that there will be no operational restrictions for control interlocks & operations of primary system equipment's [SWGR / CB/ ISOLATOR / EARTH SWITCH, etc] of AIS / GIS / SWGR, etc. for its normal operations, including conditions of ON LOAD BUS TRANSFER function of individual feeders.
10.2.31	Processing Indications	SCADA functions in monitoring direction shall be executed on SPI (Single Point Input) and DPI (Double Point Input). DPI shall only be used in case of Isolator and Circuit breaker "close" and "open" indication.

10.2.32	Command Processing	Functionality of command processing offered for SCADA interface shall include the processing of single and double commands i.e SCO (Single Command Output) and DCO (Double object command Output). DCO shall only be used in case of Isolator and Circuit Breaker "close" and "open" command. If any other commands shall be same discussed during engineering stage.
10.2.33	SOE Event & Fault records	i. RTU shall support SOE (sequence of events) feature, data archive feature for reporting and analysis. The achieved data shall be stored in a non-volatile flash memory. ii. RTU shall have the facility of recording of various parameters during event/fault with option to set the duration of record through settable pre fault and post fault time. iii. Sys Log shall be store at RTU & shall be retrievable via front/rear communication as per requirements. (If login & password protection required, the same shall be intimated to customer) iv. Internal battery backup to hold data in SOE buffer memory & also maintaining the time & date. v. If Disturbance records to store file of COMTRADE format from IED as added advantage to fetch data for fault analysis
10.2.34	20% Spare	20% Spare for RTU, DCU – Provision for 20% (Basic IO count + 20% Spare) of the total DI/DO signals (Hard/Soft) as a spare shall be made available for future requirements.
10.2.35	Spare Communication port	In RTU there shall be the provision of 3 to 4 spare ports to accommodate IEC 103/MODBUS protocol connections and spare port 1 each, for IEC 104 and IEC 61850 communication.
10.3	**Power supply module**	
10.3.1	Power supply	24-60V DC power supply module as per purchaser requirement.
10.3.2	Dual power	Hot Standby / Dual PSU & Redundancy in power supply – Possibility to increase the RTU processor availability by having a second power source in case the first one fails. Each processor should be connected with a different power source. If any power source or power supply card fails then other one should keep the switch continuous operation with auto changeover.
10.3.3	Temperature	Operating temperature range -25ºC to 75 ºC, RH 5 – 95% non condensing.
10.3.4	MCB & DC to DC Converter	AC/DC MCBs, DC to DC Converter (In case substation battery voltage level is 220V DC), etc should be provided as per requirements.
10.3.5	Power fails	The RTU cards/DCU/Modules is de-energized/failure/power off, then it should not trip Circuit breaker/SWGR.

10.3.6	Voltage surge	Over/Under voltage protection, short circuit protections for safety of RTU Module, processors, other connected devices.
10.3.7	Alarm signal	Alarm indication in case of failure, tolerant on input voltage interruption for 50ms.
10.4	**DC to DC Converter (Based on Aux.Voltage of substation)**	
10.4.1	Converter	220V to 48V DC to DC converter shall be supplied by vendor in case of substation auxiliary voltage of battery charger is 220V dc.
10.4.2	Input voltage	Input Voltage : min.176 ~ 264 V dc
10.4.3	Output voltage	Output Voltage : min 38 ~ 60 V dc
10.4.4	Output current	Min.20Amps range or As per BSES requirements
10.4.5	Voltage stability	Highly accurate voltage stabilization, low input/output noise.
10.4.6	Isolation	Proper electrical isolation between input & output converter circuitry.
10.4.7	Redundancy	Redundant DC to DC converter shall be provided
10.4.8	Voltage surge	Over/Under voltage protection, short circuit protections for safety of RTU Module, processors, other connected devices.
10.5	**Analog Input Module**	
10.5.1	Measurements	Measurable ranges of ±2mA, ±5mA, ±10mA, ±20mA, ±40mA, 4-20mA, 0-20V, in direct current (DC) values according to BSES requirements & as per site requirements.
10.5.2	Configurable features	Zero value detection, Switch over recognition, Smoothing, threshold value monitoring,
10.5.3	Resolution	A/D Converter Resolution -24 bit
10.5.4	Reporting	The Analog data shall be reported periodically Master Control Station. However shall be reported by exception if the analog value exceeds the previous value by more than 20%.
10.5.5	Electrical isolation	Analog input module with electrical isolation. Analog module input channel shall have a suitable protection and filtering to provide protection against voltage spikes and residual currents.
10.5.6	Frequency	Line Frequency interface suppression should be provided.
10.5.7	Self-diagnostic	Each module shall have the diagnostic feature for sensing channel fault, over ranges of set limit/values, card fails, etc.
10.6	**Binary Input / Digital Input Module**	
10.6.1	Input	Opto coupler based binary inputs shall be provided. Inputs shall be with aux.volt of 48Vdc range.

10.6.2	Polarity reversal IO	Each input shall be protected against polarity reversal of I/O voltage.
10.6.3	Higher priority of reporting	RTU shall support the digital status changes by exception to Master Control Center. Digital status shall have higher priority than analog data.
10.6.4	Self-diagnostic	Modules must have LED indications to provide status and diagnostic information.
10.6.5	Change in digital signal status	Any changes in state from High-Low values or Low – High values of binary/digital status must report to RTU processor & Master control center immediately as per BSES requirements without any time delay.
10.6.6	Integrity check	Binary input status shall be assigned to the scan groups for integrity check by master station after every 10minutes
10.7	**Binary Outputs (BO) / Digital Outputs (DO)**	
10.7.1	Output	Standard Output contacts shall be provided with switching capacity of 60W.
10.7.2	Voltage range	Output voltage in the range of 24~60V dc
10.7.3	Breaking current	Max.2Amps
10.7.4	Contact capability	DO module shall have capability to withstand heavy short circuit breaking current while operations. Contact voltage withstand of both AC, DC voltages according to site requirements.
10.8	Local Remote	RTU shall follow the select and execute sequence for operation of command from Master control center & Local control center based on Local Remote selectable switch.
10.8.1	Self-diagnostic	Modules must have diagnostic feature of channel / group faut, short circuits, card fail, DO contact module signal fail, etc and report to SOE as per BSES requirements.
10.8.2	RTU communication cable power limits	The attenuation and receive power shall be measured and confirmed to be within the specified limits as per OEM recommendations/instruction sheets/manuals for fiber optic cables, FO chords, etc.
10.9	**Surge Protection Devices (SPD)**	
10.9.1	Surge Protection Device (SPD)	Surge Protection Device (SPD) for Main DC Source. All modules (All Analog input Modules, Binary Inputs (BI) / Digital Inputs (DI) Modules, Binary Outputs (BO) / Digital Outputs (DO) Modules in RTU and ports (Serial and Ethernet ports) must have in-built or external surge protection devices and optical isolation.
10.9.2	Transient Voltage Suppression (TVS)	Three stage of SPD485 protection shall be provided for protection against power surges, transients, voltage surges, line noise and disturbances with Transient Voltage Suppression (TVS)
10.10	**RS485 to RS232 converter**	

10.10.1	Power supply	Operating power supply ranges min.24 – 60V dc source.
10.10.2	Isolation of signals	Galvanic isolation of 1kV between RS485 & RS232 signals.
10.10.3	Nodes	Should support 32nodes on RS485 side.
10.10.4	Physical wiring	RS485 interface should support both 2 wire & 4 wire signals.
10.10.5	Communication range	Communication speed / data transfer rages shall be user selectable type.
10.10.6	Mounting method	Din Rail Mounting system
10.11	**General features of RTU panels**	
10.11.1	Data Concentrator Unit (DCU)	Act as a Data Concentrator Unit (DCU) on IEC60870-5-101/104/MODBUS/IEC61850 protocols and support for IEC 50870-5-103, IEC 60870-5-101, IEC 61850 (latest edition), MODBUS TCP IP and RS485 MODBUS RTU protocols & ability to act as a gateway for numerical relays.
10.12	**Annual Maintenance Contract**	
10.12.1	AMC period	AMC period 3 years shall be given along with this proposal.
10.12.2	AMC Start	AMC period shall be started after handing over the system to BSES from handing over date approved by RTU/SCADA dept
10.12.3	AMC Trouble shooting	During AMC period all the issues pertaining to RTU/Gateway/Other devices shall be handled by OEM at site irrespective of number of site visits.
10.13	**RTU After-Sales Service Support**	
10.13.1	RTU performance	The RTU performance certificates (<5 year) must be submitted by vendor as per IS/IEC std during bidding stages.
10.13.2	Warranty	5 year replacement warranty is applicable to OEM's Electronic RTU modules, Gateway units, Network devices, Ethernet switches, etc. If any cards fails / burns due to surges from CT, VT/PT, CVT, via RS485 / Serial, surges through cables, etc then replacement shall be under OEM's scope till warranty period. Suitably designed SPD's shall be incorporated in the circuits as per site requirements to avoid such failures.
10.13.3	Warranty repairs	If any hardware (or) software fails during this period shall be rectified by OEM on site within 48 hours
10.13.4	RTU Life cycle	The RTU shall be chosen in such a way that OEM supplier shall not phase it out/declare EOL for next 10 years in International/India origin manufacturing units.
10.13.5	RTU Rejection	RTU likely to be phased out in next 2 years must not be offered by vendor & if found offered will be rejected at any stage even post award/drawing approval/site execution.
10.13.6	RTU Operation &Maintenance	The vendor shall supply relay such a way that where OEM supply support spare modules of RTU if in case fail, configuration modifications along with updates as per

		firmware/software for 15 years duration after expiry of warranty period.
10.13.7	Warranty & Guarantee	Warranty & Guarantee for 5 years shall start after successful commissioning of RTU/SAS at site.
10.13.8	RTU Warranty	The vendor/supplier RTU panels all products & devices including Electronic modules/cards, GPS, Ethernet switches, HMI, etc). If any cards fail/burns due to surges from CT, PT via RS485/Serial, Surges through cables, earthing, etc, then replacement shall be under OEM's scope till warranty period. Suitably designed SPD's shall be incorporated in the circuits as per the size requirements to avoid such failures. If any material found faulty during warranty period shall be replaced within min.24hrs to max.one weeks time. If purchaser replaced with any cost implication, the same shall be deducted or borne by vendor/supplier.
10.13.9	Warranty sales & service supports	A service to enable any faulty items of protection equipment's to be rectified or replaced within 24 hours by vendor or OEM during warranty periods. Suitable spares and support engineers shall be available to meet this equipment normalization without any additional cost implications & there by charging primary system for its stable operation & monitoring. If purchaser replaced with any cost implication, the same shall be deducted or borne by vendor/supplier.

11.0 MANAGED ETHERNET SWITCH

Sl no	Heading	Function description
11.1	**Ethernet Switch :**	
11.1.1	Quantity	As per the site requirements and approved SAS architecture considering 20% spare ports in each switch.
11.1.2	FO Port (Downlink)	Minimum 24 nos i. FO:20 nos LC,1310nm, multimode, 100 Mbit/s. ii. RJ45:4nos(CAT VI usable) Ethernet port copper, 100 Mbits/s.
11.1.3	FO Port (Uplink)	SFP type : Minimum 2 Nos, 1000 Mbits/s.
11.1.4	RJ 45 Port (Uplink)	SFP type : Minimum 2 Nos, 1000 Mbits/s.
11.1.5	Network Protocol	PRP, HSR compatibility.
11.1.6	Coating	Conformal type.
11.1.7	IP(ingress Protection)	IP40
11.1.8	Power Supply	Dual Modular aux. power supply for 220V /48V dc rating as per site requirements with ±20% voltage tolerance.
11.1.9	ETH Grade	Industrial Layer 2 type.
11.1.10	ETH Module	Ethernet Switch shall be Modular type

11.1.11	Certification	KEMA or Equivalent Labs, CE, FCC & IEC 61850 compliance.
11.1.12	Cyber security	IEC 62443-4-1, IEC62443-4-2, IEC 62351-3 std for cyber security requirements for Industrial OT system.
11.1.13	Operating Temperature	-40ºC to +70ºC.
11.1.14	Storage Temperature	-40ºC to +85ºC.
11.1.15	Relative Humidity	5 to 95% RH non condensing
11.1.16	Placement type	19inch Rack mounting .LED's at front , Port Terminations and Power supply at Rear.
11.1.17	Blinking LED Indicators	On each FO/RJ45 ports.
11.1.18	Maintenance /console Part	Console cable to be supplied along with each Ethernet Switches.
11.1.19	Latency	Less than or equal to 10 ms.
11.1.20	Wavelength	Multimode, 1310 /950/850 nm as per SCADA requirements.
11.1.21	Fiber Optics/ RJ45 comm. Cables/cords	As per scheme requirements.
11.1.22	RJ45 Cable Type	CAT VI.
11.1.23	Associated Connectors and Accessories	All the ports shall be covered with dust protectors. As per customer requirements and shall be verified during engineering stage.
11.1.24	IEC/ IEEE Standard	The Ethernet / Fiber optic switches should be a managed switch and are intended to be installed in the control room and shall be complaint to IEC-61850-3 electrical substation networks and IEEE 1613 standards, IEEE 802.3.
11.1.25	Network topology Redundancy	Shall support support 802.1d STP,802.1w RSTP,802.1s MSTP spanning tree protocols, PRP and HSR . .
11.1.26	Environmental	Switch design should with IP42 std protection class for power substation automation application that operate in extremely harsh environment (High and medium voltage substation environment) and it also withstands vibration, electrical surges, fast transients, electrostatic discharge and extreme temperatures and humidity. Industrial managed Fast Ethernet switch shall be supplied according to
11.1.27	Link Fail	Link Failure / Watchdog contact alarm – programmable link failure / watch dog contact to be provided as solid state relay hardwired contact.
11.1.28	Event logs & alarms	Logs and alarms with Time stamp – statistics about link status alarms are to be stored with the accurate timestamps duly tracing all events.
11.1.29	Ethernet switch access	Security features – The switch shall support different user access levels passwords, including the facility to work with

		different VLANs, following the 802.1Q standard, port security based on MAC address, possibility to disable unused ports, authentication protocols shall be provided. The switch shall have advanced cyber security features to be implemented to avoid unauthorized access to the system such as RADIUS/TACACS+ and VPN gateway support with IP sec & SSH.
11.1.30	Time sync	The switch shall have an internal clock and shall be synchronized from a network SNTP, NTP, PTP server.Also switch must have the features of acting as SNTP server.
11.1.31	License requirements	Tools with License – Diagnostics tool, other necessary tools with a multi user license to be provided along with the switch.
11.1.32	Mounting	Mounting options – Switch should be DIN Rail/19inch rack mountable as per the site requirements with tool kit for mounting to be included.
11.1.33	Port configuration	Local USB / console port for emergency boot / configuration is mandatory.
11.1.34	Network security	Network based distributed security by having a firewall on each port ot the switch for all the standard industrial protocol like IEC-61850 should be available.
11.1.35	Ethernet switch port mirroring	The switch shall have the facility of port mirroring and the user shall configure one port to replicate traffic flows of different ports, so the system administrator can monitor the incoming, outgoing or all kinds of traffic that is going through the ports under study.
11.1.36	Fail detection	ITU-T G.8032 support for Ethernet Ring redundancy, ensuring fast failure detection is preferred.
11.1.37	Environmental specifications	They switches shall sustain the stringent levels in temperature range and electromagnetic immunity defined in the 61850-3 but also the advanced functional requirements defined for operation with other IEC-61850 devices. The switch should be certified on IEC-61850, functional & Environmental specifications by KEMA.

12.0 INTERPOSING RELAY / CONTRACTORS /AUXILIARY RELAY

12.1.1	Coil voltage	48 DC ±10% tolerance.
12.1.2	Power consumption	.typically 1.2 to 6W
12.1.3	Utilization category	DC-13
12.1.4	Operating time	20-50ms
12.1.5	Operating Temperature	-25ºC to +60ºC
12.1.6	Relative humidity	Maximum 95% non condensing

12.1.7	Interposing relay	Contactors / interposing relays (48Vdc, 10A) to be provided and wired for each DO channel. Free wheeling diode is to be provided in each contractor to suppress inductive transients during energizing/de-energizing of contactor coils.
12.1.8	Contact Requirement	2NO + 2 NC with Add on block contacts
12.1.9	Contact Material	Silver-cadmium
12.1.10	Contact Rating	10 A at 50/220VDC
12.1.11	Electrical endurance	.>100000 mechanical operations
12.1.12	Mounting	DIN rail
12.1.13	IP rating	IP20
12.1.14	Insulation voltage	690V
12.1.15	Impluse withstand voltage	Uimp: 6-8 kV
12.1.16	Standards & compliances	IEC 60947-4-1 compliant, CE, UL approved
12.2	**Voltage Monitor Relay (VMR)**	
12.2.1	Aux.Volt& Measurement inputs	Aux.Voltage: 24 ~ 240V dc, UV, OV Measuring input: 0 -600V AC/DC, 1 C/O, RS485/RTU, LED Display
12.2.2	Voltage Monitor Relay (VMR)	DC (+Ve) or (-Ve) voltage shall be monitored for each RTU panel DC distribution ckts and report in case of UV/OV values exceeds set limits by digital inputs (DI) or analog inputs (4-20mA)
12.2.3	Alarm	Whenever set limits exceed values an alarm shall report to Master control center.
12.2.4	Reporting signal	The relay shall be provided with 2NO, 2NC along with RS485 communication for reporting to RTU modules (Analog/Digital).
12.3	**DC Earth Leakage Relay (ELR)**	
12.3.1	Aux.Volt& Measurement inputs	Aux.Voltage: 20 ~ 230V AC/DC, UV, OV Measuring input: 48Vdc, 110Vdc, 220Vdc Contacts: 2NO+2NC, Flush current set: 5~40mA, Time : 1~15sec.
12.3.2	Earth Leakage Relay (ELR)	The ELR leakage current range of upto ≥50mA. (min. Earth leakage 5mA~50mA) and report in case of Earth leakage current exceeds set limits. The DC leakage tested by +Ve or –Ve to Earth with set time limit of operation for alarm/trip as per requirements.
12.3.3	Alarm	Whenever set limits exceed values an alarm shall report to Master control center.

13.0 CONTROL RELAY PANEL (CRP)

Sl no	Heading	Function description
13.1	**RTU Hardwired signal interfacing**	
13.1.1	Status Signals	Potential free NO/NC contacts for status signals as per standard signal list (refer annexure A) required to be terminated on dedicated terminal block for RTU interfacing in C&R panels.The terminal block set to be renamed as X:RTU:DI
13.1.2	Command signals	Remote control interlocking contact termination shall be provided with the terminal block group name X:RTU:DO
13.1.3	Analog signals	Analag signal termination(4-20mA DC current) shall be provided for WTI, OTI, tap position signals with the terminal block group name X:RTU:AI
13.2	**Numerical Relays**	
13.2.1	Communication numerical relays	The numerical relays/IED's such as Main Protection and back up protection relays, Bay Control Protection Unit relay (BCPU) , TMU etc must have dual redundancy communication ports (Ethernet Ports TCP/IP: Fiber Optic/Copper ports) with Parallel Redundancy Protocol (PRP) , HSR, RSTP as per approved system SAS architecture.
13.2.2	Dual Ethernet Port	2xLC type duplex / 2xRJ45 ETH supporting PRP, HSR,RSTP, Dual IP etc as per the approved SAS system Architecture Communication port:
13.2.3	Data Transfer rates	The Fiber port/Copper Ethernet ports connections shall be 1310nm with single mode/multi-mode 100Base Fx – High speed data rates with multiple masters "Clients" capability.
13.2.4	Time synchronization	PTP IEEE 1588, SNTP/NTP
13.2.5	Date Model	IEC 61850-9-2 (latest Edition) and above as per BSES requirements.
13.2.6	File Transfer	The Numerical relay disturbance records must be downloadable from RTU through secure file transfer feature of IEC 61850 /IEC 103 etc
13.2.7	Communication data set	Relays shall communicate all parameters as per the standard signal list through IEC 6185-0 client server communication (refer annexure A for signal list).However this list is indicative only and number of signals should not be limited to this. Additional signals should be taken during review of actual drawings through and shall support simultaneous multiple client configuration.
13.2.8	Indications	The Following indications data format should be configured as a DPS(Double Point Status) in relays. 1. All Feeders Circuit Breaker ON & OFF 2. All Feeders Disconnector/Isolators 89A, 89B, 89L, 89T, 89PTA, 89PTB, etc ON & OFF.

		3. All Feeder Earth Switches 89AE, 89BE, 89AE1, 89BE1, 89TE, 89LE, etc. ON & OFF.
13.2.9	Commands	The Following command data format should be configured as a DPS(Double Point Status) in relays. 1. All Feeders Circuit Breaker OPEN & CLOSE commands. 2. All Feeders Disconnector/Isolators 89A, 89B, 89L, 89T, 89PTA, 89PTB, etc OPEN & CLOSE commands. 3. All Transformer OLTC – Tap changer TAP RISER, Tap LOWER commands. 4. Announciation Alarm Accept, Reset commands. All Feeder Earth Switches 89AE, 89BE, 89AE1, 89BE1, 89TE, 89LE, etc. OPEN & CLOSE Commands (if required).
13.1	GPS Signal	The RTU must have the capability of time synchronization with a GPS receiver and the GPS at the control room will be used for this time synchronization purpose
13.3	**MFM (Multifunctional Meter)**	
13.3.1	Power measurements	To extend the current / voltage / active and reactive power / power factor, etc to RTU, MFM to be installed in CRP/SWGR panels individually for each feeder/ breaker and should be integrated with RTU. Ref Annexure A – SCADA Signal list for MFM measurement signal list.
13.3.2	Auxiliary Supply	50V DC/220V DC (with ±20% tolerance)as per Site requirements
13.3.3	Sampling rate	minimum 32 samples /cycle
13.3.4	Rated Voltage	110V(L-L)/63.5V(L-N).
13.3.5	Rated current	1A & 5 A Programmable
13.3.6	Mounting type	Flush mounting
13.3.7	Overload Withstand	voltage 1.5 times the rated voltage for 10 sec and current 10 times the rated current for 1 sec.
13.3.8	Quadrant of Operation	True four Quadrant operation
13.3.9	Demand Parameters	Present, last , Predicted Peak (Maximum) demand with configurable demand integration period
13.3.10	BI/BO's	Configurable relay outputs: 2 no's
13.3.11	Environmental Characteristics	Operating temperature upto 60°C and 95% RH non condensing
13.3.12	Accuracy class	0.2S
13.3.13	Communication Protocol	Modbus RTU

13.3.14	Communication Interface	2 Wire RS485 with 2.5KV RMS insulation
13.3.15	Surge protection for aux power supply	Shall have reverse polarity protection, voltage surge /spike protection.(inbuilt/externally provided).
13.3.16	Standards/Compliance	IEC 62053-22, IS14697, IEC60529, .EMI/EMC,IEC 61326, IEC 61010
13.3.17	Programming interface	Digital LED Display with programming keys and Configurable Password protection

14.0 GLOBAL POSITIONING SYSTEM (GPS)

Sl no	Heading	Function description
14.1	GPS Signal	The RTU must have the capability of time synchronization with a GPS receiver and the GPS at the control room will be used for this time synchronization purpose
14.2	GPS Signal backup	In case of failure of the GPS receiver, the RTUs time synchronization should be through the MASTER SCADA Clock.
14.3	GPS Setup	The RTU must have inbuilt or external GPS with antenna & internal real time clock to synchronize the IEDs connected to it over their respective protocol.
14.4	Redundant Port	GPS must have dual redundant LAN port for time synchronization.
14.5	Time synchronization	All RTU shall be capable of being synchronized with the system clock through Grid GPS Clock, Master Clock, PC/Laptop, SNTP, IRIG-B, PTPand secondarily through time synchronization messages sent from SCADA MCC through IEC104 protocol as per BSES requirements.
14.6	Approved Make	MASSIBUS / SANDS

15.0 RTU PANEL ACCESSORIES

Sl no	Heading	Function description
15.1	Space heaters	Thermostat controlled with switch for Isolation & Ind.lamp. Space heaters shall be covered with mesh for safety purpose.
15.2	Voltage	240 V AC.
15.3	Wattage	To be provided by Vendor.
15.4	Thermostat Range / Hygrostat Range	To be provided by Vendor.
15.5	Provided with Individual fuse unit	To be provided by Vendor.

15.6	Power Socket and switch	240V, 5/15A universal type socket to be provided in each panel with on-off switch.
15.7	MCBs and Fuses	Each main power distribution point such as Rack/Chassis power supply should be protected by MCB of suitable rating. Subsequently current distribution point should be protected by fuse. Fuse Terminal block should be with LED Indicator.
15.8	Panel illumination	240V AC illumination lamp 15~20Watts controlled by panel door switch to be provided in each panel.
15.9	Local /remote Switch	RTU shall have a Local / Remote selectable switch, 2 C/O Contacts to disable the remote command operation during maintenance. Status of the local remote switch shall be wired to RTU digital input channel for reporting to Master control center.
15.10	Antistatic foot Mat	Durable, Wear and tear resistant , Antistatic foot mat of dimensions shall be provided.

16.0 APPROVED MAKES OF COMPONENTS

Sl no	Heading	Function description
16.1	**RTU Processor – Makes as follows:**	
16.1.1	**HITACHI**	RTU 560 with CMR02 processor series with latest firmware/software and above
16.1.2	**SIEMENS**	SICAM A8000 : CP8050 processor with latest firmware/software and above
16.1.3	**SCHNEIDER**	SAITEL : T500 series with latest firmware/software and above
16.2	**Ethernet switches – Makes as follows:**	
16.2.1	SIEMENS	RUGGEDCOM
16.2.2	HIRSCHMANN	HIRSCHMANN
16.2.3	MOXA	MOXA 7528
16.3	Auxiliary relay	ABB/ Omron/Siemens/Schneider / Hitachi Energy
16.4	Multi Function Meter	Rishabh (3440), Schneider(EM 6400 NG plus)
16.5	LIU	Preston
16.6	MCBs	Siemens/Schneider/Legrand/ABB.
16.7	Control switches	Switron/Kaycee
16.8	Terminal blocks	Elmex/Connectwell/phoenix contact
16.9	RTU/ETH Panel Wiring	Polycab/KEI/Finolex/Havells
16.10	Lugs	Dowells/Jaison

16.11	CFL	Bajaj / Phillips / Havells
16.12	DC Voltage Monitor	/Rishabh/Phoenix/ Voltech.
16.13	DC Earth leakage Monitor (ELM)	Voltech/Phoenix.
16.14	Other devices	if any missed out device needs to meet site requirements must be as per BSES recommendations only.

17.0 DEVIATIONS

Deviation from this specification shall be stated in writing with the tender by reference to the specification clause/ GTP/ Drawing and description of alternative offer. In absence of such a statement, it shall be assumed by the buyer that the seller complies fully with this specification.

18.0 DRAWINGS AND DATA SUBMISSION MATRIX

- Document checklist for each stage is given in table below. (Refer equipment specification for details)
- Document check sheet compliance shall be the first sheet for each submission stage i.e. Technical bid, Drawing Approval, Pre Dispatch, Pre closure.
- No submission is acceptable without check list compliance.
- Deficient/ improper document/ drawing submission shall be liable for rejection.
- Order of documents shall be strictly as per the check list with in Soft copy with separate folder in proper nomenclature.
- Any drawing not included in the below table but necessary for detailed engineering shall be deemed to be included in bidder's scope.

Sl.no	Head	Bid	Drawing Approval	Pre Dispatch	Pre Closure
18.1	Contact Person Name, Email ID and Mobile Number	Required			
18.2	Consolidated Deviation Sheet	Required	Required		
18.3	GTP	Required	Required		
18.4	Type Test as per IS/IEC	Required			
18.5	Manufacturer's quality assurance plan and certification for quality standards		Required		
18.6	Sizing Calculation of Associated Equipment		Required		
18.7	Recommended Spares Apart from spares stated in Spec(for 10 years of operation)		Required		
18.8	RTU Drawings		Required		
18.9	Panel wise BOQ		Required		
18.10	Index Sheet		Required		

Sl.no	Head	Bid	Drawing Approval	Pre Dispatch	Pre Closure
18.11	Symbols		Required		
18.12	System Architecture	Required	Required		
18.13	AC Distribution Circuit		Required		
18.14	DC Distribution Circuit		Required		
18.15	RTU BI circuits		Required		
18.16	RTU BO circuit		Required		
18.17	Communication Architecture		Required		
18.18	All Relay SCADA Communication Diagram with FO patch chord lengths		Required		
18.19	Station Signal list		Required		
18.20	Interpanel wiring circuits		Required		
18.21	TB Reference page		Required		
18.22	RTU/SCADA/LCC circuits		Required		
18.23	QAP		Required		
18.24	Inspection Reports			Required	
18.25	As manufacturing Drawings A3 size Hard copy with each panel			Required	
18.26	Operation and Maintenance Manual			Required	Required
18.27	Trouble shooting manual			Required	Required
18.28	As built Drawings A3 size Hard copy with each panel after commissioning				Required
18.29	Test Report				Required
18.30	Soft Copy				
18.31	In Pen drive/mail/CD/DVD	Required	Required	Required	Required
18.32	Annexure				
18.32.1	Annexure – A	SCADA SIGNAL LIST			
18.32.2	Annexure – B	BILL OF MATERIALS			
18.32.3	Annexure – C	SPARES REQUIREMENT			
18.32.4	Annexure – D	COMMUNICATION ARCHITECTURE			
18.32.5	Annexure – E	SCADA ADAPTATION & INTEGRATION SERVICE			

19.0 QUALITY ASSURANCE, INSPECTION &TESTING

Sl no	Heading	Function description
19.1	Vendor quality plan	To be submitted for purchaser approval.
19.2	Type tests	Product must be type tested as per Indian Standards or IEC. Vendor shall be submitting & get approval from BSES team for inspection relevant documents.
19.3	Type test report validity	Last five years from the date of bid submission.

19.4	Acceptance and Routine tests	The documents furnished for details of method of inspection, checking & acceptance standards and results shall be approved by Inspection team of BSES. Any hold points raised, then the supplier shall comply with the remarks made by BSES representative on such reviews with regards to further testing, rectification or rejection, etc.
19.5	Notice to Purchaser for conducting tests	Five weeks in advance.
19.6	Inspection	The supplier to proceed with the work past a hold point only after clearance by purchaser (if any) or a witness waiver letter from BSES.
19.7	Inspection visit	Successful bidder has to bear all factory inspection/testing expenses of Engineer (3 nos) including To&Fro Flight travels, foods, accommodation, lodging & boarding – Minimum 4 Star rated Logde/Hotel (As per Govt.approved list).
19.8	Test reports of acceptance and routine test before dispatch	i. Final As Built Drawings(ABD) of each panel. ii. Acceptance & Routine Test reports iii. Quality & Type Test reports iv. Manuals of each device. v. Inspection reports & FAT reports. vi. Numerical relays cortec codes. vii. Sizing calculation of associated equipments. viii. Compliance sheets of each scheme drawing. ix. Material Dispatch clearance certificate (MDCC)
19.9	Deliverable	Hard Copies: ➢ 2 sets : A3 size – Approved Drawing of each panel Protection Dept. ➢ 2sets :A3 size –As Manufactured Drawings(AMD) after approveddrawing of each panel for site execution including inspection comments & correction updated shall be dispatch along with panel. ➢ Final Site review & comments after Site commissioning RedMarkupDrawing(RMD) which shall be corrected on supplied drawings by Vendor. ➢ 4sets :A3 size – Final AsBuiltDrawing(ABD) with AsBuiltStamp on dwg – For Projects, Protection Dept, O&M Dept, SCADA Dept,.(After commissioning) ➢ 1sets :A4 size – RTU/ETH-SW Maintenance Manual, Numerical relays each type/model,Aux.relays, Ethernet switches, Meters, Metrosil, Calculation of sizing of various equipments, DC/AC sizing calculations,etc& other devices fixed in panels as per IS/IEC std.

		Soft Copies: ➢ 2 CD/DVD copy: Final AsBuilt Drawings (ABD) including Autocad/Enggcad files, pdf files. Maintenance manuals in .pdf files. (bidder shall discuss with BSES for actual format of submission of documents). ➢ Numerical relays original software's (latest version)

20.0 PACKING

Sl no	Heading	Function description
20.1	Packing Protection	Against corrosion, dampness, heavy rains, breakage and vibration. During transportation/ transit and storage, panels may be subjected to outdoor conditions. Hence, packing of each panel shall be weather proof. Anti-static bags or foam shall be used for electronic modules such as RTU Modules, Ethernet switches. Cables, Batteries and other accessories shall be packed separately. Silica gel bags shall be kept inside the packaging to prevent damage to sensitive components due to humidity ingress during transport and storage
20.2	Packing for accessories and spares	Robust wooden non returnable packing case with all the above protection & identification Label. Anti-static bags or foam shall be used for electronic modules such as RTU Modules, Ethernet switches.
20.3	Packing Identification Label to be provided on each packing case with the following details.	
20.4	Purchaser's name.	
20.5	PO number (along with SAP item code, if any) & date.	
20.6	Equipment Tag no. (if any)	
20.7	Destination.	
20.8	Project Details.	
20.9	Panel serial number ,Equipment Identification No, Panel Drawing details	
20.10	Manufacturer / Supplier's name.	

20.11	Address of Manufacturer / Supplier / it's agent.
20.12	Description and Quantity.
20.13	Country of origin.
20.14	Month & year of Manufacturing.
20.15	Case measurements.
20.16	Gross and net weights in kilograms.
20.17	All necessary slinging and stacking instructions.
20.18	Any component found damaged during transportation shall be immediately returned to the manufacturer's facility. The Arrangement for the same shall be made by the bidder

21.0 SHIPPING

Sl no	Heading	Function description
21.1	**Shipping**	The bidder shall ascertain at an early date and definitely before the commencement of manufacture, any transport limitations such as weights, dimensions, road culverts, Overhead lines, free access etc. from the Manufacturing plant to the project site. Bidder shall furnish the confirmation that the proposed packages can be safely transported, as normal or oversize packages, up to the site. Any modifications required in the infrastructure and cost thereof in this connection shall be brought to the notice of the Purchaser.
		On completion of manufacturing the items can be dispatched only after issue of shipping release by the purchaser.
		The seller shall be responsible for all transit damages due to improper packing.

22.0 HANDLING AND STORAGE

Sl no	Heading	Function description
22.1	Handling and Storage	Manufacturer instruction shall be followed. Detail handling & storage instruction sheet / manual needs to be furnished before commencement of supply.

23.0 ABBREVATIONS

Sl No.	Name	Description
23.1	AC	Alternating Current
23.2	DC	Direct Current
23.3	CT	Current Transformer
23.4	VT or PT	Voltage Transformer or Potential Transformer
23.5	SLD	Single Line Diagram
23.6	ICT	Interposing Current Transformer
23.7	CRP	Control & Relay Panel
23.8	BC	Bus Coupler
23.9	Cap.Bank	Capacitor Bank
23.10	LCC	Local Control Cubicle
23.11	RTU	Remote Terminal Unit
23.12	SCADA	Supervisory Control And Data Acquisition
23.13	AIS	Air Insulated Substation
23.14	GIS	Gas Insulated Substation
23.15	SWGR	Switch gear
23.16	OLTC	On Load Tap Changer
23.17	IED	Intelligent Electronic Device
23.18	HMI	Human Machine Interface
23.19	LCD	Liquid Crystal Display
23.20	LED	Light Emitting Diode
23.21	CB	Circuit Breaker
23.22	TNC	Trip Neutral Close
23.23	ES	Earth Switch
23.24	MCB	Miniature Circuit Breaker
23.25	PT100	Platinum Temperature resistance sensor “100” denotes its nominal resistance at “0ºC”.
23.26	PC	Personal Computer
23.27	DM	Derive Mechanism
23.28	Sync	Synchronization
23.29	LBB/BFR	Local Breaker Backup or Breaker Failure
23.30	UF	Under Frequency
23.31	OF	Over Frequency
23.32	df/dt	Rate of Change of Frequency
23.33	OV	Over Voltage
23.34	UV	Under Voltage
23.35	VT Fail	Voltage Transformer Fail

23.36	VMR	Voltage Monitoring Relay
23.37	Sync	Synchronization function
23.38	PSB	Power Swing Block
23.39	AVR	Automatic Voltage Regulator
23.40	TMU	Transformer Monitoring Unit
23.41	MCB	Miniature Circuit Breaker
23.42	ELR	Earth Leakage Relay
23.43	AI	Analog Input
23.44	BI	Binary Input
23.45	BO	Binary Output
23.46	GPS	Global Positioning System
23.47	IRIG – B	Inter Range Instrumentation Group – B
23.48	USB	Universal Serial Bus
23.49	CAT-VI	Category – 6 [Standardized Twisted Pair cable]
23.50	RS485	Recommended Standard - 485
23.51	PLC	Programmable Logic Controller
23.52	FRTU	Feeder Remote Terminal Unit
23.53	OFC/FOC	Optical Fiber cable / Fiber Optic Cable
23.54	FO	Fiber Optic
23.55	RJ	Registered Jack
23.56	LC	Lucent Connector
23.57	SC	Standard Connector
23.58	SFP	Small Form-factor Pluggable
23.59	RSTP	Rapid Spanning Tree Protocol
23.60	HSR	High-availability Seamless Redundancy
23.61	PRP	Parallel Redundancy Protocol
23.62	STP	Shielded Twisted Pair
23.63	FTP	Foil Twisted Pair
23.64	NO	Normally Open
23.65	NC	Normally Close
23.66	L/R	Local / Remote
23.67	QAP	Quality Assurance Plan
23.68	GTP	General Technical Particular

24.0 ANNEXURE – A, B, C, D, E

Note: (Annex. B details shall be provided by vendor for approval)

ANNEXURE- A – SCADA SIGNAL LIST

2. SIGNAL LIST FOR 11KV OUTGOING SWITCH GEARS

S.No.	Signal Name	Short name	Data Type	States		Alarm /event	SOURCE	Protocol
1	CB Status	CB_ST	Double point Status	OFF	ON	EVENT	PROT_IED	IEC 61850
2	SPRING CHARGED	SPCHG	Single Point Status	DISCHARGED	CHARGED	EVENT	PROT_IED	IEC 61850
3	Trip circuit Supervision	TCS	Single Point Status	UNHEALTHY	HEALTHY	Alarm & EVENT	PROT_IED	IEC 61850
4	Close Permissive	CLOSE_PERM	Single Point Status	OK	NOT_OK	Alarm & EVENT	PROT_IED	IEC 61850
5	CB in Service	CB_SER	Single Point Status	OUT	IN	EVENT	PROT_IED	IEC 61850
6	Master trip relay oprtd	86_OPRTD	Single Point Status	RESET	OPERATED	Alarm & EVENT	PROT_IED	IEC 61850
7	Panel DC _STATUS	DCF	Single Point Status	UNHEALTHY	HEALTHY	Alarm & EVENT	CRP_Hardwired_RTU	IEC 61850
8	Panel AC_STATUS	ACF	Single Point Status	UNHEALTHY	HEALTHY	EVENT	PROT_IED	IEC 61850
9	L/R _POSITION	SCADENB	Single Point Status	LOCAL	SCADA	EVENT	PROT_IED	IEC 61850
10	Relay internal Failure	IRF	Single Point Status	UNHEALTHY	HEALTHY	Alarm & EVENT	CRP_Hardwired_RTU	IEC 61850
11	ANY_START	FPI	Single Point Status	NORMAL	OPERATED	Alarm & EVENT	PROT_IED	IEC 61849
12	Over current Stage 1 (IDMT)	OC_STAGE_1	Single Point Status	NORMAL	OPERATED	Alarm & EVENT	PROT_IED	IEC 61850
13	Over Current Stage 2(DMT)	OC_STAGE_2	Single Point Status	NORMAL	OPERATED	Alarm & EVENT	PROT_IED	IEC 61850
14	Earth Fault Stage 1 (IDMT)	EF_STAGE_1	Single Point Status	NORMAL	OPERATED	Alarm & EVENT	PROT_IED	IEC 61850
15	Earth Fault Stage2 (DMT)	EF_STAGE_2	Single Point Status	NORMAL	OPERATED	Alarm & EVENT	PROT_IED	IEC 61850
16	CB Command	CB_CMD	Double Point Control (SBO WITH ENHANCE SECURITY)	OPEN_CMD	CLOSE_CMD		PROT_IED	IEC 61850
17	Master trip relay_Reset	86_RST	Single Point Control (DIRECT WITH NORMAL SECURITY)	RESET_CMD			PROT_IED	IEC 61850
18	R_PH FAULT CURRENT		Measured Floating Input				PROT_IED	IEC 61850
19	Y_PH FAULT CURRENT		Measured Floating Input				PROT_IED	IEC 61850
20	B_PH FAULT CURRENT		Measured Floating Input				PROT_IED	IEC 61850
21	NEUTRAL FAULT CURRENT		Measured Floating Input				PROT_IED	IEC 61850
22	R_PH CURRENT		Short Measured Floating Point				MFM	MODBUS_RTU
23	Y_PH CURRENT		Short Measured Floating Point				MFM	MODBUS_RTU
24	B_PH CURRENT		Short Measured Floating Point				MFM	MODBUS_RTU
25	R_Y PH VOLT		Short Measured Floating Point				MFM	MODBUS_RTU
26	Y_B PH VOLT		Short Measured Floating Point				MFM	MODBUS_RTU
27	B_R PH VOLT		Short Measured Floating Point				MFM	MODBUS_RTU
28	ACTIVE POWER		Short Measured Floating Point				MFM	MODBUS_RTU
29	REACTIVE POWER		Short Measured Floating Point				MFM	MODBUS_RTU
30	APPARENT POWER		Short Measured Floating Point				MFM	MODBUS_RTU
31	POWER FACTOR		Short Measured Floating Point				MFM	MODBUS_RTU
32	MAXIMUM DEMAND		Short Measured Floating Point				MFM	MODBUS_RTU
33	NEUTRAL CURRENT		Short Measured Floating Point				MFM	MODBUS_RTU
34	% THD VOLTAGE		Short Measured Floating Point				MFM	MODBUS_RTU
35	% THD CURRENT		Short Measured Floating Point				MFM	MODBUS_RTU
36	PHASE ANGLE R_PH		Short Measured Floating Point				MFM	MODBUS_RTU
37	PHASE ANGLE Y_PH		Short Measured Floating Point				MFM	MODBUS_RTU
38	PHASE ANGLE B_PH		Short Measured Floating Point				MFM	MODBUS_RTU

SIGNAL LIST FOR 11KV INCOMER SWITCH GEARS PANELS

S.No.	Signal Name	Short name	Data Type	States		Alarm /event	SOURCE	Protocol
1	CB Status	CB_ST	Double point Status	OFF	ON	EVENT	PROT_IED	IEC 61850
2	SPRING CHARGED	SPCHG	Single Point Status	DISCHARGED	CHARGED	EVENT	PROT_IED	IEC 61850
3	Trip circuit Supervision_1	TCS	Single Point Status	UNHEALTHY	HEALTHY	Alarm & EVENT	PROT_IED	IEC 61850
4	Trip circuit Supervision_2	TCS	Single Point Status	UNHEALTHY	HEALTHY	Alarm & EVENT	PROT_IED	IEC 61850
5	CLOSE PERMISSIVE	CLS_PER	Single Point Status	NOT_OK	OK	Alarm & EVENT	PROT_IED	IEC 61850
6	CB in Service	CB_SER	Single Point Status	OUT	IN	EVENT	PROT_IED	IEC 61850
7	Master trip relay oprtd	86_	Single Point Status	RESET	OPERATED	Alarm & EVENT	PROT_IED	IEC 61850
8	Panel DC	DCF	Single Point Status	UNHEALTHY	HEALTHY	Alarm & EVENT	CRP_Hardwired_RTU	IEC 61850
9	Panel AC	ACF	Single Point Status	UNHEALTHY	HEALTHY	EVENT	PROT_IED	IEC 61850
10	VT FUSE		Single Point Status	HEALTHY	BLOWN	Alarm & EVENT	PROT_IED	IEC 61850
11	SYNCH _STATUS		Single Point Status	NOT_OK	OK	Alarm & EVENT	PROT_IED	IEC 61850
12	PT MCB_TRIP METERING		Single Point Status	NORMAL	TRIP	Alarm & EVENT	PROT_IED	IEC 61850
13	PT MCB_TRIP PROTECTION		Single Point Status	NORMAL	TRIP	Alarm & EVENT	PROT_IED	IEC 61850
14	OVER VOLTAGE _PROTECTION_OPRTD		Single Point Status	NORMAL	OPERATED	Alarm & EVENT	PROT_IED	IEC 61850
15	UNDER VOLTAGE _PROTECTION_OPRTD		Single Point Status	NORMAL	OPERATED	Alarm & EVENT	PROT_IED	IEC 61850
16	REF_PROT_OPRTD		Single Point Status	NORMAL	OPERATED	Alarm & EVENT	PROT_IED	IEC 61850
17	L/R _POSITION	SCADENB	Single Point Status	LOCAL	SCADA	EVENT	PROT_IED	IEC 61850
18	Relay internal Failure Relay 1	IRF RL1	Single Point Status	UNHEALTHY	HEALTHY	Alarm & EVENT	CRP_Hardwired_RTU	IEC 61850
19	Relay internal Failure Relay 2	IRF RL2	Single Point Status	UNHEALTHY	HEALTHY	Alarm & EVENT	CRP_Hardwired_RTU	IEC 61850
20	ANY_START	FPI	Single Point Status	NORMAL	OPERATED	Alarm & EVENT	PROT_IED	IEC 61850
21	Over current Stage 1 (IDMT)	OC_STAGE_1	Single Point Status	NORMAL	OPERATED	Alarm & EVENT	PROT_IED	IEC 61850
22	Over Current Stage 2(DMT)	OC_STAGE_2	Single Point Status	NORMAL	OPERATED	Alarm & EVENT	PROT_IED	IEC 61850
23	Earth Fault Stage 1 (IDMT)	EF_STAGE_1	Single Point Status	NORMAL	OPERATED	Alarm & EVENT	PROT_IED	IEC 61850
24	Earth Fault Stage2 (DMT)	EF_STAGE_2	Single Point Status	NORMAL	OPERATED	Alarm & EVENT	PROT_IED	IEC 61850
25	CB Command	CB_CMD	Double Point Control (SBO WITH ENHANCE SECURITY)	OPEN_CMD	CLOSE_CMD		PROT_IED	IEC 61850
26	Master trip relay_Reset	86_RST	Single Point Control (DIRECT WITH NORMAL SECURITY)	RESET_CMD			PROT_IED	IEC 61850
27	R_PH FAULT CURRENT		Measured Floating Input				PROT_IED	IEC 61850
28	Y_PH FAULT CURRENT		Measured Floating Input				PROT_IED	IEC 61850
29	B_PH FAULT CURRENT		Measured Floating Input				PROT_IED	IEC 61850
30	NEUTRAL FAULT CURRENT		Measured Floating Input				PROT_IED	IEC 61850
31	R_PH CURRENT		Short Measured Floating Point	AMPS			MFM	MODBUS_RTU

32	Y_PH CURRENT		Short Measured Floating Point	AMPS			MFM	MODBUS_RTU
33	B_PH CURRENT		Short Measured Floating Point	AMPS			MFM	MODBUS_RTU
34	R_Y PH VOLT		Short Measured Floating Point	VOLTS			MFM	MODBUS_RTU
35	Y_B PH VOLT		Short Measured Floating Point	VOLTS			MFM	MODBUS_RTU
36	B_R PH VOLT		Short Measured Floating Point	VOLTS			MFM	MODBUS_RTU
37	ACTIVE POWER		Short Measured Floating Point	W			MFM	MODBUS_RTU
38	REACTIVE POWER		Short Measured Floating Point	VAR			MFM	MODBUS_RTU
39	APPARENT POWER		Short Measured Floating Point	VA			MFM	MODBUS_RTU
40	POWER FACTOR		Short Measured Floating Point				MFM	MODBUS_RTU
41	MAXIMUM DEMAND		Short Measured Floating Point	WATTS			MFM	MODBUS_RTU
42	NEUTRAL CURRENT		Short Measured Floating Point	AMPS			MFM	MODBUS_RTU
43	% THD VOLTAGE		Short Measured Floating Point	%			MFM	MODBUS_RTU
44	% THD CURRENT		Short Measured Floating Point	%			MFM	MODBUS_RTU
45	ACTIVE ENERGY_EXPORT		Short Measured Floating Point	MWH			MFM	MODBUS_RTU
46	ACTIVE ENERGY_IMPORT		Short Measured Floating Point	MWH			MFM	MODBUS_RTU
47	REACTIVE ENERGY_EXPORT		Short Measured Floating Point	MVARH			MFM	MODBUS_RTU
48	REACTIVE ENERGY_IMPORT		Short Measured Floating Point	MVARH			MFM	MODBUS_RTU
49	APPARENT ENERGY		Short Measured Floating Point	VAH			MFM	MODBUS_RTU
50	PHASE ANGLE R_Y		Short Measured Floating Point	DEGREES			MFM	MODBUS_RTU
51	PHASE ANGLE Y_B		Short Measured Floating Point	DEGREES			MFM	MODBUS_RTU
52	PHASE ANGLE B_R		Short Measured Floating Point	DEGREES			MFM	MODBUS_RTU

SIGNAL LIST FOR 11KV CAP BANK								
S.No.	**Signal Name**	**Short name**	**Data Type**	**States**		**Alarm /event**	**SOURCE**	**Protocol**
1	CB Status	CB_ST	Double point Status	OFF	ON	EVENT	PROT_IED	IEC 61850
2	CAP Bank Isolators Status	ISO_ST	Double point Status	OFF	ON	EVENT	PROT_IED	IEC 61850
3	SPRING CHARGED	SPCHG	Single Point Status	DISCHARGED	CHARGED	EVENT	PROT_IED	IEC 61850
4	Trip circuit Supervision	TCS	Single Point Status	UNHEALTHY	HEALTHY	Alarm & EVENT	PROT_IED	IEC 61850
5	CLOSE PERMISSIVE	CLS_PER	Single Point Status	NOT_OK	OK	Alarm & EVENT	PROT_IED	IEC 61852
5	CB in Service	CB_SER	Single Point Status	OUT	IN	EVENT	PROT_IED	IEC 61850
6	Master trip relay oprtd	86_	Single Point Status		OPERATED	Alarm & EVENT	PROT_IED	IEC 61850
7	Panel DC Fail	DCF	Single Point Status	UNHEALTHY	HEALTHY	Alarm & EVENT	CRP_Hardwired_RTU	IEC 61850
8	Panel AC Fail	ACF	Single Point Status	UNHEALTHY	HEALTHY	EVENT	PROT_IED	IEC 61850
9	L/R Switch	SCADENB	Single Point Status	LOCAL	SCADA	EVENT	PROT_IED	IEC 61850
10	Relay internal Failure	IRF	Single Point Status	UNHEALTHY	HEALTHY	Alarm & EVENT	CRP_Hardwired_RTU	IEC 61850
11	PT FUSE		Single Point Status	HEALTHY	BLOWN	Alarm & EVENT	PROT_IED	IEC 61850
12	PT MCB_ METERING		Single Point Status	NORMAL	TRIP	Alarm & EVENT	PROT_IED	IEC 61850
13	PT MCB_PROTECTION		Single Point Status	NORMAL	TRIP	Alarm & EVENT	PROT_IED	IEC 61850
14	NEUTRAL DISPLACEMENT_OPRTD	59N	Single Point Status	NORMAL	OPERATED	Alarm & EVENT	PROT_IED	IEC 61850
15	OVER VOLTAGE_PROT_OPRTD	59	Single Point Status	NORMAL	OPERATED	Alarm & EVENT	PROT_IED	IEC 61850
16	UNDER VOLTAGE_OPRTD	27	Single Point Status	NORMAL	OPERATED	Alarm & EVENT	PROT_IED	IEC 61850
17	TIMER STATUS		Single Point Status	RESET	OPERATED	EVENT	PROT_IED	IEC 61850
18	Over current Stage 1 (IDMT)	OC_STAGE_1	Single Point Status	NORMAL	OPERATED	Alarm & EVENT	PROT_IED	IEC 61850
19	Over Current Stage 2(DMT)	OC_STAGE_2	Single Point Status	NORMAL	OPERATED	Alarm & EVENT	PROT_IED	IEC 61850
20	Earth Fault Stage 1 (IDMT)	EF_STAGE_1	Single Point Status	NORMAL	OPERATED	Alarm & EVENT	PROT_IED	IEC 61850
21	Earth Fault Stage2 (DMT)	EF_STAGE_2	Single Point Status	NORMAL	OPERATED	Alarm & EVENT	PROT_IED	IEC 61850
22	CB Command	CB_CMD	Double Point Control	OPEN_CMD	CLOSE_CMD		PROT_IED	IEC 61850
23	Master trip relay_Reset	86_RST	Single Point Control	RESET_CMD			PROT_IED	IEC 61850
24	R_PH FAULT CURRENT		Measured Floating Input		AMPS		PROT_IED	IEC 61850
25	Y_PH FAULT CURRENT		Measured Floating Input		AMPS		PROT_IED	IEC 61850
26	B_PH FAULT CURRENT		Measured Floating Input		AMPS		PROT_IED	IEC 61850
27	NEUTRAL FAULT CURRENT		Measured Floating Input		AMPS		PROT_IED	IEC 61850
28	R_PH CURRENT		Short Measured Floating Point		AMPS		MFM	MODBUS_RTU
29	Y_PH CURRENT		Short Measured Floating Point		AMPS		MFM	MODBUS_RTU
30	B_PH CURRENT		Short Measured Floating Point		AMPS		MFM	MODBUS_RTU
31	R_Y PH VOLT		Short Measured Floating Point		VOLTS		MFM	MODBUS_RTU
32	Y_B PH VOLT		Short Measured Floating Point		VOLTS		MFM	MODBUS_RTU
33	B_R PH VOLT		Short Measured Floating Point		VOLTS		MFM	MODBUS_RTU
34	REACTIVE POWER		Short Measured Floating Point		VAR		MFM	MODBUS_RTU
35	POWER FACTOR		Short Measured Floating Point				MFM	MODBUS_RTU
36	NEUTRAL CURRENT		Short Measured Floating Point		AMPS		MFM	MODBUS_RTU
37	% THD VOLTAGE		Short Measured Floating Point		%		MFM	MODBUS_RTU
38	% THD CURRENT		Short Measured Floating Point		%		MFM	MODBUS_RTU
39	REACTIVE ENERGY		Short Measured Floating Point		VARH		MFM	MODBUS_RTU
40	PHASE ANGLE R_Y		Short Measured Floating Point		DEGREES		MFM	MODBUS_RTU

41	PHASE ANGLE Y_B		Short Measured Floating Point		DEGREES		MFM	MODBUS_RTU
42	PHASE ANGLE B_R		Short Measured Floating Point		DEGREES		MFM	MODBUS_RTU

SIGNAL LIST FOR 11KV BUSCOUPLER SWITCH GEARS								
S.No.	**Signal Name**	**Short name**	**Data Type**	**States**		**Alarm /event**	**SOURCE**	**Protocol**
1	CB Status	CB_ST	Double point Status	OFF	ON	EVENT	PROT_IED	IEC 61850
2	SPRING CHARGED	SPCHG	Single Point Status	DISCHARGED	CHARGED	EVENT	PROT_IED	IEC 61850
3	Trip circuit Supervision	TCS	Single Point Status	UNHEALTHY	HEALTHY	Alarm & EVENT	PROT_IED	IEC 61850
4	CLOSE PERMISSIVE	CLS_PER	Single Point Status	NOT_OK	OK	Alarm & EVENT	PROT_IED	IEC 61852
5	CB in Service	CB_SER	Single Point Status	OUT	IN	EVENT	PROT_IED	IEC 61850
6	Master trip relay oprtd	86_	Single Point Status	RESET	OPERATED	Alarm & EVENT	PROT_IED	IEC 61850
7	Panel DC Fail		Single Point Status	UNHEALTHY	HEALTHY	Alarm & EVENT	CRP_Hardwired_RTU	IEC 61850
8	Panel AC Fail		Single Point Status	UNHEALTHY	HEALTHY	EVENT	PROT_IED	IEC 61850
9	L/R Switch	SCADENB	Single Point Status	LOCAL	SCADA	EVENT	PROT_IED	IEC 61850
10	Relay internal Failure	IRF	Single Point Status	UNHEALTHY	HEALTHY	Alarm & EVENT	CRP_Hardwired_RTU	IEC 61850
11	BUS-1 PT FUSE		Single Point Status	HEALTHY	BLOWN	Alarm & EVENT	PROT_IED	IEC 61850
12	BUS-2 PT FUSE		Single Point Status	HEALTHY	BLOWN	Alarm & EVENT	PROT_IED	IEC 61850
13	PT-1 MCB_ METERING		Single Point Status	NORMAL	TRIP	Alarm & EVENT	PROT_IED	IEC 61850
14	PT-2 MCB_ METERING		Single Point Status	NORMAL	TRIP	Alarm & EVENT	PROT_IED	IEC 61850
15	PT MCB_PROTECTION		Single Point Status	NORMAL	TRIP	Alarm & EVENT	PROT_IED	IEC 61850
16	ANY_START	FPI	Single Point Status	NORMAL	OPERATED	Alarm & EVENT	PROT_IED	IEC 61849
17	Over current Stage 1 (IDMT)	OC_STAGE_1	Single Point Status	NORMAL	OPERATED	Alarm & EVENT	PROT_IED	IEC 61850
18	Over Current Stage 2(DMT)	OC_STAGE_2	Single Point Status	NORMAL	OPERATED	Alarm & EVENT	PROT_IED	IEC 61850
19	Earth Fault Stage 1 (IDMT)	EF_STAGE_1	Single Point Status	NORMAL	OPERATED	Alarm & EVENT	PROT_IED	IEC 61850
20	Earth Fault Stage2 (DMT)	EF_STAGE_2	Single Point Status	NORMAL	OPERATED	Alarm & EVENT	PROT_IED	IEC 61850
21	CB Command	CB_CMD	Double Point Control	OPEN_CMD	CLOSE_CMD		PROT_IED	IEC 61850
22	Master trip relay_Reset	86_RST	Single Point Control	RESET_CMD			PROT_IED	IEC 61850
23	R_PH FAULT CURRENT		Measured Floating Input				PROT_IED	IEC 61850
24	Y_PH FAULT CURRENT		Measured Floating Input				PROT_IED	IEC 61850
25	B_PH FAULT CURRENT		Measured Floating Input				PROT_IED	IEC 61850
26	NEUTRAL FAULT CURRENT		Measured Floating Input				PROT_IED	IEC 61850
27	DISTURBANCE RECORD		COMTRADE FILE FORMAT				PROT_IED	IEC 61850
28	R_PH CURRENT		Short Measured Floating Point				MFM	MODBUS_RTU
29	Y_PH CURRENT		Short Measured Floating Point				MFM	MODBUS_RTU
30	B_PH CURRENT		Short Measured Floating Point				MFM	MODBUS_RTU
31	BUS_1_R_Y PH VOLT		Short Measured Floating Point				MFM	MODBUS_RTU
32	BUS_1_Y_B PH VOLT		Short Measured Floating Point				MFM	MODBUS_RTU
33	BUS_1_B_R PH VOLT		Short Measured Floating Point				MFM	MODBUS_RTU
34	BUS_2_R_Y PH VOLT		Short Measured Floating Point				MFM	MODBUS_RTU
35	BUS_2_Y_B PH VOLT		Short Measured Floating Point				MFM	MODBUS_RTU
36	BUS_2_B_R PH VOLT		Short Measured Floating Point				MFM	MODBUS_RTU
37	NEUTRAL CURRENT		Short Measured Floating Point				MFM	MODBUS_RTU
38	% THD VOLTAGE		Short Measured Floating Point				MFM	MODBUS_RTU
39	% THD CURRENT		Short Measured Floating Point				MFM	MODBUS_RTU
40	PHASE ANGLE R_Y		Short Measured Floating Point				MFM	MODBUS_RTU
41	PHASE ANGLE Y_B		Short Measured Floating Point				MFM	MODBUS_RTU
42	PHASE ANGLE B_R		Short Measured Floating Point				MFM	MODBUS_RTU

SIGNAL LIST FOR 33KV INCOMER & 33KV OUTGOING SWITCH GEARS PANELS

S.No.	Signal Name	Short name	Data Type	States		Alarm /event	SOURCE	Protocol
1	CB Status	CB_ST	Double point Status	OFF	ON	EVENT	PROT_IED & CRP Hardwired to I	IEC 61850
2	89A_STATUS *(For Outdoor & GIS stations)*	89A_ST	Double point Status	OFF	ON	EVENT	PROT_IED	IEC 61850
3	89B_STATUS *(For Outdoor & GIS stations)*	89B_ST	Double point Status	OFF	ON	EVENT	PROT_IED	IEC 61850
4	89AE_STATUS *(For Outdoor & GIS stations)*	89AE_ST	Double point Status	OFF	ON	EVENT	PROT_IED	IEC 61850
5	89L_STATUS *(For Outdoor & GIS stations)*	89L_ST	Double point Status	OFF	ON	EVENT	PROT_IED	IEC 61850
6	89LE_STATUS *(For Outdoor & GIS stations)*	89LE_ST	Double point Status	OFF	ON	EVENT	PROT_IED	IEC 61850
7	SF6 GAS_PRESSURE_CB_Compartment *(For SF6 Switchgears)*		Single Point Status	NORMAL	LOW	Alarm & EVENT	PROT_IED	IEC 61850
8	SF6 GAS_PRESSURE_LOCKOUT *(For SF6 Switchgears)*		Single Point Status	NORMAL	OPERATED	Alarm & EVENT	PROT_IED	IEC 61850
9	SF6 GAS_PRESSURE_LOW_BB1_Compartment *(For SF6 Switchgears)*		Single Point Status	NORMAL	LOW	Alarm & EVENT	PROT_IED	IEC 61850
10	SF6 GAS_PRESSURE_LOW_BB2_Compartment *(For SF6 Switchgears)*		Single Point Status	NORMAL	LOW	Alarm & EVENT	PROT_IED	IEC 61850
11	SPRING CHARGED	SPCHG	Single Point Status	DISCHARGED	CHARGED	EVENT	PROT_IED	IEC 61850
12	Trip circuit 1 Supervision	TCS	Single Point Status	UNHEALTHY	HEALTHY	Alarm & EVENT	PROT_IED	IEC 61850
13	Trip circuit 2 Supervision	TCS	Single Point Status	UNHEALTHY	HEALTHY	Alarm & EVENT	PROT_IED	IEC 61850
14	Close Permissive		Single Point Status	not ok	OK	EVENT	PROT_IED	IEC 61850
15	CB in Service *(For VCB)*	CB_SER	Single Point Status	OUT	IN	EVENT	PROT_IED	IEC 61850
16	Master trip relay oprtd	86	Single Point Status	RESET	OPERATED	Alarm & EVENT	PROT_IED	IEC 61850
17	Main DC1_supervision	80DC_1	Single Point Status	UNHEALTHY	HEALTHY	Alarm & EVENT	CRP_Hardwired_RTU	
18	Main DC2_supervision	80DC_2	Single Point Status	UNHEALTHY	HEALTHY	Alarm & EVENT	CRP_Hardwired_RTU	
19	DC MCB_supervision		Single Point Status	NORMAL	TRIP	Alarm & EVENT	PROT_IED	IEC 61850
20	Panel AC		Single Point Status	UNHEALTHY	HEALTHY	EVENT	PROT_IED	IEC 61850
21	VT FUSE		Single Point Status	HEALTHY	BLOWN	Alarm & EVENT	PROT_IED	IEC 61850
22	PT MCB_TRIP METERING		Single Point Status	NORMAL	TRIP	Alarm & EVENT	PROT_IED	IEC 61850
23	PT MCB_TRIP PROTECTION		Single Point Status	NORMAL	TRIP	Alarm & EVENT	PROT_IED	IEC 61850
24	L/R Switch in SCADA	SCADENB	Single Point Status	LOCAL	SCADA	EVENT	PROT_IED	IEC 61850
25	OC/EF RELAY HEALTH SUPERVISION	IRF 51/51N	Single Point Status	UNHEALTHY	HEALTHY	Alarm & EVENT	CRP_Hardwired_RTU	IEC 61850
26	87_ RELAY HEALTH SUPERVISION	IRF 87	Single Point Status	UNHEALTHY	HEALTHY	Alarm & EVENT	CRP_Hardwired_RTU	IEC 61850
27	LDR Carrier channel 1 LINK	LDR CH LK-1	Single Point Status	HEALTHY_	UNHEALTHY	Alarm & EVENT	PROT_IED	IEC 61850
28	LDR Carrier channel 2 LINK	LDR CH LK-2	Single Point Status	HEALTHY_	UNHEALTHY	Alarm & EVENT	PROT_IED	IEC 61850
29	ANY_START	FPI	Single Point Status	NORMAL	OPERATED	Alarm & EVENT	PROT_IED	IEC 61850
30	Over current Stage 1 (IDMT)	OC_STAGE_1	Single Point Status	NORMAL	OPERATED	Alarm & EVENT	PROT_IED	IEC 61850

31	Over Current Stage 2(DMT)	OC_STAGE_2	Single Point Status	NORMAL	OPERATED	Alarm & EVENT	PROT_IED	IEC 61850
32	Earth Fault Stage 1 (IDMT)	EF_STAGE_1	Single Point Status	NORMAL	OPERATED	Alarm & EVENT	PROT_IED	IEC 61850
33	Earth Fault Stage2 (DMT)	EF_STAGE_2	Single Point Status	NORMAL	OPERATED	Alarm & EVENT	PROT_IED	IEC 61850
34	Differential_Prot_Oprtd	87L	Single Point Status	NORMAL	OPERATED	Alarm & EVENT	PROT_IED	IEC 61850
35	Distance_Prot_Oprtd	21	Single Point Status	NORMAL	OPERATED	Alarm & EVENT	PROT_IED	IEC 61850
36	LBB ZONE-1 Protection	50BF_1	Single Point Status	NORMAL	OPERATED	Alarm & EVENT	PROT_IED	IEC 61850
37	LBB ZONE-2 Protection	50BF_2	Single Point Status	NORMAL	OPERATED	Alarm & EVENT	PROT_IED	IEC 61850
38	BROKEN_CONDUCTOR_PROTECTION		Single Point Status	NORMAL	OPERATED	Alarm & EVENT	PROT_IED	IEC 61850
39	SYNCHRO_CHECK		Single Point Status	NOT OK	OK	EVENT	PROT_IED	IEC 61850
40	CB Command	CB_CMD	Double Point Control	OPEN_CMD	CLOSE_CMD		PROT_IED & CRP Hardwired to I	IEC 61850
41	89A_CMD	89A_CMD	Double Point Control	OPEN_CMD	CLOSE_CMD		PROT_IED	IEC 61850
42	89B_CMD	89B_CMD	Double Point Control	OPEN_CMD	CLOSE_CMD		PROT_IED	IEC 61850
43	89L_CMD	89L_CMD	Double Point Control	OPEN_CMD	CLOSE_CMD		PROT_IED	IEC 61850
44	Master trip relay_Reset	86_RST	Single Point Control	RESET_CMD			PROT_IED	IEC 61850
45	R_PH FAULT CURRENT		Measured Floating Input				PROT_IED	IEC 61850
46	Y_PH FAULT CURRENT		Measured Floating Input				PROT_IED	IEC 61850
47	B_PH FAULT CURRENT		Measured Floating Input				PROT_IED	IEC 61850
48	NEUTRAL FAULT CURRENT		Measured Floating Input				PROT_IED	IEC 61850
49	Differential BIAS Current R_PH		Measured Floating Input				PROT_IED	IEC 61850
50	Differential BIAS Current Y_PH		Measured Floating Input				PROT_IED	IEC 61850
51	Differential BIAS Current B_PH		Measured Floating Input				PROT_IED	IEC 61850
52	Fault distance/Impedance		Measured Floating Input				PROT_IED	IEC 61850
53	DISTURBANCE RECORD		COMTRADE FILE FORMAT				PROT_IED	IEC 61850
54	R_PH CURRENT		Short Measured Floating Point				MFM	MODBUS_RTU
55	Y_PH CURRENT		Short Measured Floating Point				MFM	MODBUS_RTU
56	B_PH CURRENT		Short Measured Floating Point				MFM	MODBUS_RTU
57	R_Y PH VOLT		Short Measured Floating Point				MFM	MODBUS_RTU
58	Y_B PH VOLT		Short Measured Floating Point				MFM	MODBUS_RTU
59	B_R PH VOLT		Short Measured Floating Point				MFM	MODBUS_RTU
60	ACTIVE POWER		Short Measured Floating Point				MFM	MODBUS_RTU
61	REACTIVE POWER		Short Measured Floating Point				MFM	MODBUS_RTU
62	APPARENT POWER		Short Measured Floating Point				MFM	MODBUS_RTU
63	POWER FACTOR		Short Measured Floating Point				MFM	MODBUS_RTU
64	MAXIMUM DEMAND		Short Measured Floating Point				MFM	MODBUS_RTU
65	NEUTRAL CURRENT		Short Measured Floating Point				MFM	MODBUS_RTU
66	% THD VOLTAGE		Short Measured Floating Point				MFM	MODBUS_RTU
67	% THD CURRENT		Short Measured Floating Point				MFM	MODBUS_RTU
68	ACTIVE ENERGY		Short Measured Floating Point				MFM	MODBUS_RTU
69	REACTIVE ENERGY		Short Measured Floating Point				MFM	MODBUS_RTU
70	APPARENT ENERGY		Short Measured Floating Point				MFM	MODBUS_RTU
71	PHASE ANGLE R_Y		Short Measured Floating Point				MFM	MODBUS_RTU
72	PHASE ANGLE Y_B		Short Measured Floating Point				MFM	MODBUS_RTU
73	PHASE ANGLE B_R		Short Measured Floating Point				MFM	MODBUS_RTU

SIGNAL LIST FOR 66KV/33KV Bus Coupler

S.No.	Signal Name	Short name	Data Type	States		Alarm /event	SOURCE	Protocol
1	CB Status	CB_ST	Double point Status	OFF	ON	EVENT	PROT_IED	IEC 61850
2	89A_STATUS *(For Outdoor & GIS stations)*	89A_ST	Double point Status	OFF	ON	EVENT	PROT_IED	IEC 61850
3	89B_STATUS *(For Outdoor & GIS stations)*	89B_ST	Double point Status	OFF	ON	EVENT	PROT_IED	IEC 61850
4	89AE_STATUS *(For Outdoor & GIS stations)*	89AE_ST	Double point Status	OFF	ON	EVENT	PROT_IED	IEC 61850
5	89BE_STATUS *(For Outdoor & GIS stations)*	89BE_ST	Double point Status	OFF	ON	EVENT	PROT_IED	IEC 61850
6	SF6 GAS_PRESSURE_CB_Compartment *(For SF6 Switchgears)*		Single Point Status	NORMAL	LOW	Alarm & EVENT	PROT_IED	IEC 61850
7	SF6 GAS_PRESSURE_LOCKOUT *(For SF6 Switchgears)*		Single Point Status	NORMAL	OPERATED	Alarm & EVENT	PROT_IED	IEC 61850
8	SF6 GAS_PRESSURE_LOW_BB1_Compartment *(For SF6 Switchgears)*		Single Point Status	NORMAL	LOW	Alarm & EVENT	PROT_IED	IEC 61850
9	SF6 GAS_PRESSURE_LOW_BB2_Compartment *(For SF6 Switchgears)*		Single Point Status	NORMAL	LOW	Alarm & EVENT	PROT_IED	IEC 61850
10	SPRING CHARGED	SPCHG	Single Point Status	DISCHARGED	CHARGED	EVENT	PROT_IED	IEC 61850
11	Trip circuit 1 Supervision	TCS	Single Point Status	UNHEALTHY	HEALTHY	Alarm & EVENT	PROT_IED	IEC 61850
12	Trip circuit 2 Supervision	TCS	Single Point Status	UNHEALTHY	HEALTHY	Alarm & EVENT	PROT_IED	IEC 61850
13	Close Permissive		Single Point Status	not ok	OK	EVENT	PROT_IED	IEC 61850
14	CB in Service *(For VCB)*	CB_SER	Single Point Status	OUT	IN	EVENT	PROT_IED	IEC 61850
15	Master trip relay oprtd	86	Single Point Status	RESET	OPERATED	Alarm & EVENT	PROT_IED	IEC 61850
16	Main DC1_supervision	80DC_1	Single Point Status	UNHEALTHY	HEALTHY	Alarm & EVENT	CRP_Hardwired_RTU	IEC 61850
17	Main DC2_supervision	80DC_2	Single Point Status	UNHEALTHY	HEALTHY	Alarm & EVENT	CRP_Hardwired_RTU	IEC 61850
18	DC MCB_supervision		Single Point Status	NORMAL	TRIP	Alarm & EVENT	PROT_IED	IEC 61850
19	Panel AC		Single Point Status	UNHEALTHY	HEALTHY	EVENT	PROT_IED	IEC 61850
20	PT1 FUSE BLOWN		Single Point Status	HEALTHY	BLOWN	Alarm & EVENT	PROT_IED	IEC 61850
21	PT2 FUSE BLOWN		Single Point Status	HEALTHY	BLOWN	Alarm & EVENT	PROT_IED	IEC 61850
22	PT MCB_TRIP METERING		Single Point Status	NORMAL	TRIP	Alarm & EVENT	PROT_IED	IEC 61850
23	PT MCB_TRIP PROTECTION		Single Point Status	NORMAL	TRIP	Alarm & EVENT	PROT_IED	IEC 61850
24	L/R Switch in SCADA	SCADENB	Single Point Status	LOCAL	SCADA	EVENT	PROT_IED	IEC 61850
25	OC/EF RELAY HEALTH SUPERVISION	IRF 51/51N	Single Point Status	UNHEALTHY	HEALTHY	Alarm & EVENT	CRP_Hardwired_RTU	IEC 61850
26	ANY_START	FPI	Single Point Status	NORMAL	OPERATED	Alarm & EVENT	PROT_IED	IEC 61850
27	Over current Stage 1 (IDMT)	OC_STAGE_1	Single Point Status	NORMAL	OPERATED	Alarm & EVENT	PROT_IED	IEC 61850
28	Over Current Stage 2(DMT)	OC_STAGE_2	Single Point Status	NORMAL	OPERATED	Alarm & EVENT	PROT_IED	IEC 61850
29	Earth Fault Stage 1 (IDMT)	EF_STAGE_1	Single Point Status	NORMAL	OPERATED	Alarm & EVENT	PROT_IED	IEC 61850
30	Earth Fault Stage2 (DMT)	EF_STAGE_2	Single Point Status	NORMAL	OPERATED	Alarm & EVENT	PROT_IED	IEC 61850

31	LBB ZONE-1 Protection	50BF_1	Single Point Status	NORMAL	OPERATED	Alarm & EVENT	PROT_IED	IEC 61850
32	LBB ZONE-2 Protection	50BF_2	Single Point Status	NORMAL	OPERATED	Alarm & EVENT	PROT_IED	IEC 61850
33	BROKEN_CONDUCTOR_PROTECTION		Single Point Status	NORMAL	OPERATED	Alarm & EVENT	PROT_IED	IEC 61850
34	SYNCHRO_CHECK		Single Point Status	NOT OK	OK	EVENT	PROT_IED	IEC 61850
35	CB Command	CB_CMD	Double Point Control	OPEN_CMD	CLOSE_CMD		PROT_IED	IEC 61850
36	89A_CMD	89A_CMD	Double Point Control	OPEN_CMD	CLOSE_CMD		PROT_IED	IEC 61850
37	89B_CMD	89B_CMD	Double Point Control	OPEN_CMD	CLOSE_CMD		PROT_IED	IEC 61850
38	89L_CMD	89L_CMD	Double Point Control	OPEN_CMD	CLOSE_CMD		PROT_IED	IEC 61850
39	Master trip relay_Reset	86_RST	Single Point Control	RESET_CMD			PROT_IED	IEC 61850
40	R_PH FAULT CURRENT		Measured Floating Input				PROT_IED	IEC 61850
41	Y_PH FAULT CURRENT		Measured Floating Input				PROT_IED	IEC 61850
42	B_PH FAULT CURRENT		Measured Floating Input				PROT_IED	IEC 61850
43	NEUTRAL FAULT CURRENT		Measured Floating Input				PROT_IED	IEC 61850
44	R_PH CURRENT		Short Measured Floating Point				MFM	MODBUS_RTU
45	Y_PH CURRENT		Short Measured Floating Point				MFM	MODBUS_RTU
46	B_PH CURRENT		Short Measured Floating Point				MFM	MODBUS_RTU
47	BUS_1 R_Y PH VOLT		Short Measured Floating Point				MFM	MODBUS_RTU
48	BUS_1 Y_B PH VOLT		Short Measured Floating Point				MFM	MODBUS_RTU
49	BUS_1 B_R PH VOLT		Short Measured Floating Point				MFM	MODBUS_RTU
50	BUS_2 R_Y PH VOLT		Short Measured Floating Point				MFM	MODBUS_RTU
51	BUS_2 Y_B PH VOLT		Short Measured Floating Point				MFM	MODBUS_RTU
52	BUS_2_B_R PH VOLT		Short Measured Floating Point				MFM	MODBUS_RTU
53	MAXIMUM DEMAND		Short Measured Floating Point				MFM	MODBUS_RTU
54	NEUTRAL CURRENT		Short Measured Floating Point				MFM	MODBUS_RTU
55	% THD VOLTAGE		Short Measured Floating Point				MFM	MODBUS_RTU
56	% THD CURRENT		Short Measured Floating Point				MFM	MODBUS_RTU
57	PHASE ANGLE R_Y		Short Measured Floating Point				MFM	MODBUS_RTU
58	PHASE ANGLE Y_B		Short Measured Floating Point				MFM	MODBUS_RTU
59	PHASE ANGLE B_R		Short Measured Floating Point				MFM	MODBUS_RTU

SIGNAL LIST FOR 66KV/33KV PTR Control & Relay Panels

S.No.	Signal Name	Short name	Data Type	States		Alarm /event	SOURCE	Protocol
1	CB Status	CB_ST	Double point Status	OFF	ON	EVENT	PROT_IED	IEC 61850
2	89A_STATUS *(For Outdoor & GIS stations)*	89A_ST	Double point Status	OFF	ON	EVENT	PROT_IED	IEC 61850
3	89B_STATUS *(For Outdoor & GIS stations)*	89B_ST	Double point Status	OFF	ON	EVENT	PROT_IED	IEC 61850
4	89AE_STATUS *(For Outdoor & GIS stations)*	89AE_ST	Double point Status	OFF	ON	EVENT	PROT_IED	IEC 61850
5	89T_STATUS *(For Outdoor & GIS stations)*	89L_ST	Double point Status	OFF	ON	EVENT	PROT_IED	IEC 61850
6	89TE_STATUS *(For Outdoor & GIS stations)*	89LE_ST	Double point Status	OFF	ON	EVENT	PROT_IED	IEC 61850
7	SF6 GAS_PRESSURE_CB_Compartment *(For SF6 Switchgears)*		Single Point Status	NORMAL	LOW	Alarm & EVENT	PROT_IED	IEC 61850
8	SF6 GAS_PRESSURE_LOCKOUT *(For SF6 Switchgears)*		Single Point Status	NORMAL	OPERATED	Alarm & EVENT	PROT_IED	IEC 61850
9	SF6 GAS_PRESSURE_LOW_BB1_Compartment *(For SF6 Switchgears)*		Single Point Status	NORMAL	LOW	Alarm & EVENT	PROT_IED	IEC 61850
10	SF6 GAS_PRESSURE_LOW_BB2_Compartment *(For SF6 Switchgears)*		Single Point Status	NORMAL	LOW	Alarm & EVENT	PROT_IED	IEC 61850
11	SPRING CHARGED	SPCHG	Single Point Status	DISCHARGED	CHARGED	EVENT	PROT_IED	IEC 61850
12	Trip circuit 1 Supervision	TCS	Single Point Status	UNHEALTHY	HEALTHY	Alarm & EVENT	PROT_IED	IEC 61850
13	Trip circuit 2 Supervision	TCS	Single Point Status	UNHEALTHY	HEALTHY	Alarm & EVENT	PROT_IED	IEC 61850
14	CLOSE PERMISSIVE	CLS_PER	Single Point Status	NOT_OK	OK	Alarm & EVENT	PROT_IED	IEC 61850
15	CB in Service *(For VCB)*	CB_SER	Single Point Status	OUT	IN	EVENT	PROT_IED	IEC 61850
16	Master trip relay oprtd	86	Single Point Status	RESET	OPERATED	Alarm & EVENT	PROT_IED	IEC 61850
17	Main DC1_supervision	80DC_1	Single Point Status	UNHEALTHY	HEALTHY	Alarm & EVENT	ADJACENT PANEL IED	IEC 61850
18	Main DC2_supervision	80DC_2	Single Point Status	UNHEALTHY	HEALTHY	Alarm & EVENT	ADJACENT PANEL IED	IEC 61850
19	DC MCB_supervision		Single Point Status	NORMAL	TRIP	Alarm & EVENT	PROT_IED	IEC 61850

20	Panel AC		Single Point Status	UNHEALTHY	HEALTHY	EVENT	PROT_IED	IEC 61850
21	VT FUSE	27	Single Point Status	HEALTHY	BLOWN	Alarm & EVENT	PROT_IED	IEC 61850
22	PT MCB_TRIP METERING		Single Point Status	NORMAL	TRIP	Alarm & EVENT	PROT_IED	IEC 61850
23	PT MCB_TRIP PROTECTION		Single Point Status	NORMAL	TRIP	Alarm & EVENT	PROT_IED	IEC 61850
24	L/R Switch in SCADA	SCADENB	Single Point Status	LOCAL	SCADA	EVENT	PROT_IED	IEC 61850
25	OC/EF RELAY HEALTH SUPERVISION	IRF 51/51N	Single Point Status	UNHEALTHY	HEALTHY	Alarm & EVENT	ADJACENT PANEL IED	IEC 61850
26	87_ RELAY HEALTH SUPERVISION	IRF 87	Single Point Status	UNHEALTHY	HEALTHY	Alarm & EVENT	ADJACENT PANEL IED	IEC 61850
27	TMU_HEALTH SUPERVISION	IRF_TMU	Single Point Status	UNHEALTHY	HEALTHY	Alarm & EVENT	ADJACENT PANEL IED	IEC 61850
28	ANY_START	FPI	Single Point Status	NORMAL	OPERATED	Alarm & EVENT	PROT_IED	IEC 61850
29	INRUSH DETECTED		Single Point Status	NORMAL	OPERATED	Alarm & EVENT	PROT_IED	IEC 61850
30	Over current Stage 1 (IDMT)	OC_STAGE_1	Single Point Status	NORMAL	OPERATED	Alarm & EVENT	PROT_IED	IEC 61850
31	Over Current Stage 2(DMT)	OC_STAGE_2	Single Point Status	NORMAL	OPERATED	Alarm & EVENT	PROT_IED	IEC 61850
32	Earth Fault Stage 1 (IDMT)	EF_STAGE_1	Single Point Status	NORMAL	OPERATED	Alarm & EVENT	PROT_IED	IEC 61850
33	Earth Fault Stage2 (DMT)	EF_STAGE_2	Single Point Status	NORMAL	OPERATED	Alarm & EVENT	PROT_IED	IEC 61850
34	Differential_Prot_Oprtd	87L	Single Point Status	NORMAL	OPERATED	Alarm & EVENT	PROT_IED	IEC 61850
35	LBB PROTECTION INITIATED	50BF	Single Point Status	NORMAL	OPERATED	Alarm & EVENT	PROT_IED	IEC 61850
36	LBB ZONE-1 Protection	96_1	Single Point Status	NORMAL	OPERATED	Alarm & EVENT	PROT_IED	IEC 61850
37	LBB ZONE-2 Protection	96_2	Single Point Status	NORMAL	OPERATED	Alarm & EVENT	PROT_IED	IEC 61850
38	Restricted Earth Fault Protection	64	Single Point Status	NORMAL	OPERATED	Alarm & EVENT	PROT_IED	IEC 61850
39	Stanby Earth Fault Protection		Single Point Status	NORMAL	OPERATED	Alarm & EVENT	PROT_IED	IEC 61850
40	INTERTRIP PROTECTION		Single Point Status	NORMAL	OPERATED	Alarm & EVENT	PROT_IED	IEC 61850
41	OTI_ALARM		Single Point Status	NORMAL	OPERATED		TMU	IEC 61850
42	OTI_TRIP		Single Point Status	NORMAL	OPERATED		TMU	IEC 61850

43	WTI_ALARM		Single Point Status	NORMAL	OPERATED		TMU	IEC 61850
44	WTI_TRIP		Single Point Status	NORMAL	OPERATED		TMU	IEC 61850
45	BUCHHOLZ_ALARM		Single Point Status	NORMAL	OPERATED		TMU	IEC 61850
46	BUCHHOLZ_TRIP		Single Point Status	NORMAL	OPERATED		TMU	IEC 61850
47	MOG_ALARM		Single Point Status	NORMAL	OPERATED		TMU	IEC 61850
48	OLTC OSR		Single Point Status	NORMAL	OPERATED		TMU	IEC 61850
49	PRV_TRIP		Single Point Status	NORMAL	OPERATED		TMU	IEC 61850
50	SPRV_TRIP		Single Point Status	NORMAL	OPERATED		TMU	IEC 61850
51	OLTC _PRV_TRIP		Single Point Status	NORMAL	OPERATED			
52	OLTC_L/R_STATUS		Single Point Status	LOCAL	REMOTE		TMU	IEC 61850
53	OLTC_MOTOR AC SUPPLY		Single Point Status	NORMAL	FAIL		TMU	IEC 61850
54	TMU_AUTO_MANUAL_STATUS		Single Point Status	MANUAL	AUTO		TMU	IEC 61850
55	TMU_L/R_STATUS		Single Point Status	LOCAL	REMOTE		TMU	IEC 61850
56	TAP_CHANGER_STATUS		Single Point Status	IDLE	IN_PROGRESS		TMU	IEC 61850
57	FAN_GROUP1		Single Point Status	OFF	ON		TMU	IEC 61850
58	FAN_GROUP2		Single Point Status	OFF	ON		TMU	IEC 61850
59	CB Command	CB_CMD	Double Point Control	OPEN_CMD	CLOSE_CMD		PROT_IED	IEC 61850
60	89A_CMD	89A_CMD	Double Point Control	OPEN_CMD	CLOSE_CMD		PROT_IED	IEC 61850
61	89B_CMD	89B_CMD	Double Point Control	OPEN_CMD	CLOSE_CMD		PROT_IED	IEC 61850
62	89T_CMD	89L_CMD	Double Point Control	OPEN_CMD	CLOSE_CMD		PROT_IED	IEC 61850
63	Master trip relay_Reset	86_RST	Single Point Control	RESET_CMD			PROT_IED	IEC 61850
64	TMU_AUTO_MANUAL_COMMAND	OLTC A/M_CMD	Double Point Control	AUTO_CMD	MANUAL_CMD		TMU	IEC 61850
65	TMU_TAP_RAISE/LOWER_COMMAND		Regulation command output				TMU	

66	WINDING TEMPERATURE_INDICATOR (WTI)	WTI	Short Measured Floating Point				TMU	IEC61850
67	OIL_TEMPERATURE_INDICATOR (OTI)	OTI	Short Measured Floating Point				TMU	IEC61850
68	TAP POSITION_INDICATOR (TPII)	TPI	Short Measured Floating Point				TMU	IEC61850
69	TAP COUNTER		SHORT INTEGER				TMU	IEC61850
70	R_PH FAULT CURRENT		Measured Floating Input				PROT_IED	IEC 61850
71	Y_PH FAULT CURRENT		Measured Floating Input				PROT_IED	IEC 61850
72	B_PH FAULT CURRENT		Measured Floating Input				PROT_IED	IEC 61850
73	NEUTRAL FAULT CURRENT		Measured Floating Input				PROT_IED	IEC 61850
74	Differential BIAS Current R_PH		Measured Floating Input				PROT_IED	IEC 61850
75	Differential BIAS Current Y_PH		Measured Floating Input				PROT_IED	IEC 61850
76	Differential BIAS Current B_PH		Measured Floating Input				PROT_IED	IEC 61850
77	R_PH CURRENT		Short Measured Floating Point				MFM	MODBUS_RTU
78	Y_PH CURRENT		Short Measured Floating Point				MFM	MODBUS_RTU
79	B_PH CURRENT		Short Measured Floating Point				MFM	MODBUS_RTU
80	R_Y PH VOLT		Short Measured Floating Point				MFM	MODBUS_RTU
81	Y_B PH VOLT		Short Measured Floating Point				MFM	MODBUS_RTU
82	B_R PH VOLT		Short Measured Floating Point				MFM	MODBUS_RTU
83	ACTIVE POWER		Short Measured Floating Point				MFM	MODBUS_RTU
84	REACTIVE POWER		Short Measured Floating Point				MFM	MODBUS_RTU
85	APPARENT POWER		Short Measured Floating Point				MFM	MODBUS_RTU
86	POWER FACTOR		Short Measured Floating Point				MFM	MODBUS_RTU
87	MAXIMUM DEMAND		Short Measured Floating Point				MFM	MODBUS_RTU
88	NEUTRAL CURRENT		Short Measured Floating Point				MFM	MODBUS_RTU

89	% THD VOLTAGE		Short Measured Floating Point				MFM	MODBUS_RTU
90	% THD CURRENT		Short Measured Floating Point				MFM	MODBUS_RTU
91	ACTIVE ENERGY		Short Measured Floating Point				MFM	MODBUS_RTU
92	REACTIVE ENERGY		Short Measured Floating Point				MFM	MODBUS_RTU
93	APPARENT ENERGY		Short Measured Floating Point				MFM	MODBUS_RTU
94	PHASE ANGLE R_Y		Short Measured Floating Point				MFM	MODBUS_RTU
95	PHASE ANGLE Y_B		Short Measured Floating Point				MFM	MODBUS_RTU
96	PHASE ANGLE B_R		Short Measured Floating Point				MFM	MODBUS_RTU

Multifunctional meter Signal list

S.No.	Signal Name	data type	Unit
1	R_PH CURRENT	Short Measured Floating Point	AMPS
2	Y_PH CURRENT	Short Measured Floating Point	AMPS
3	B_PH CURRENT	Short Measured Floating Point	AMPS
4	R_Y PH VOLT	Short Measured Floating Point	Volt
5	Y_B PH VOLT	Short Measured Floating Point	Volt
6	B_R PH VOLT	Short Measured Floating Point	Volt
7	ACTIVE POWER	Short Measured Floating Point	Watts
8	REACTIVE POWER	Short Measured Floating Point	VAR
9	APPARENT POWER	Short Measured Floating Point	VA
10	POWER FACTOR	Short Measured Floating Point	
11	MAXIMUM DEMAND	Short Measured Floating Point	watts
12	NEUTRAL CURRENT	Short Measured Floating Point	amps
13	% THD VOLTAGE	Short Measured Floating Point	%
14	% THD CURRENT	Short Measured Floating Point	%
15	ACTIVE ENERGY	Short Measured Floating Point	WH
16	REACTIVE ENERGY	Short Measured Floating Point	VARH
17	APPARENT ENERGY	Short Measured Floating Point	VA
18	PHASE ANGLE R_Y	Short Measured Floating Point	DEGREES
19	PHASE ANGLE Y_B	Short Measured Floating Point	DEGREES
20	PHASE ANGLE B_R	Short Measured Floating Point	DEGREES

SIGNAL LIST PTR NIFPS PANEL

S.No	SIGNAL NAME	DATA TYPE	STATES	
1	NIFPS SYSTEM STATUS	SINGLE POINT INPUT	NORMAL	OPERATED
2	NIFPS SYSTEM POSITION	SINGLE POINT INPUT	IN	OUT OF SERVICE
3	TCIV POSITION	SINGLE POINT INPUT	OPEN	CLOSED
4	FIRE DETECTOR	SINGLE POINT INPUT	NORMAL	TRIP
5	N2 CYL PRESSURE	SINGLE POINT INPUT	NORMAL	LOW
6	SYSTEM COMMON ALARM	SINGLE POINT INPUT	NORMAL	OPERATED
7	NIFPS DC SUPPLY	SINGLE POINT INPUT	HEALTHY	FAIL

Signal list : Battery Charger					
S.No.	**Signal Name**	**Data type**		**Protocol**	**Unit**
1	Charger A Voltage	Measurand	16 bit Integer	Modbus RTU	V
2	Charger A current	Measurand	16 bit Integer	Modbus RTU	A
3	Charger B Voltage	Measurand	16 bit Integer	Modbus RTU	V
4	charger B current	Measurand	16 bit Integer	Modbus RTU	A
5	Battery Voltage	Measurand	16 bit Integer	Modbus RTU	V
6	Battery Current	Measurand	16 bit Integer	Modbus RTU	A
7	Load Voltage	Measurand	16 bit Integer	Modbus RTU	V
8	Load Current	Measurand	16 bit Integer	Modbus RTU	A
9	Charger A +ve to GND Volt	Measurand	16 bit Integer	Modbus RTU	V
10	Charger A -ve to GND Volt	Measurand	16 bit Integer	Modbus RTU	V
11	Charger B +ve to GND Volt	Measurand	16 bit Integer	Modbus RTU	V
12	Charger B -ve to GND Volt	Measurand	16 bit Integer	Modbus RTU	V
13	Charger Mains Fail	Single Bit Status	boolean	Modbus RTU	
14	Charger A AC Under Voltage	Single Bit Status	boolean	Modbus RTU	
15	Charger B AC Under Voltage	Single Bit Status	boolean	Modbus RTU	
16	Charger A AC MCCB Trip	Single Bit Status	boolean	Modbus RTU	
17	Charger A DC MCCB Trip	Single Bit Status	boolean	Modbus RTU	
18	Charger B AC MCCB Trip	Single Bit Status	boolean	Modbus RTU	
19	Charger B DC MCCB Trip	Single Bit Status	boolean	Modbus RTU	
20	Battery MCCB trip	Single Bit Status	boolean	Modbus RTU	
21	Charger A Rectifier /Capacitor Fuse Blown	Single Bit Status	boolean	Modbus RTU	
22	Charger B Rectifier /Capacitor Fuse Blown	Single Bit Status	boolean	Modbus RTU	
23	charger A on boost mode	Single Bit Status	boolean	Modbus RTU	
24	charger B on boost mode	Single Bit Status	boolean	Modbus RTU	
25	Insulation Failure (DC Leakage)	Single Bit Status	boolean	Modbus RTU	
26	DC Bus Over voltage	Single Bit Status	boolean	Modbus RTU	
27	DC Bus under Voltage	Single Bit Status	boolean	Modbus RTU	
28	SMPS Module 1 Fail (for SMPS based Charger)	Single Bit Status	boolean	Modbus RTU	
29	SMPS Module 2 Fail(for SMPS based Charger)	Single Bit Status	boolean	Modbus RTU	
30	SMPS Module n Fail(for SMPS based Charger)	Single Bit Status	boolean	Modbus RTU	
31	DCDB Any DC MCB/ MCCB trip	Single Bit status	boolean	Modbus RTU	

SIGNAL LIST : Li-ion Battery bank BMS System

S.No.	Signal Name	UOM	states		Signal Type
1	Battery Voltage	volts			Measurand
2	Pack Voltage	volts			Measurand
3	Charging Current	Amps			Measurand
4	Discharging Current	Amps			Measurand
5	State of Charge	%			Measurand
6	State of Health	%			Measurand
7	Rated Capacity	Ah			Measurand
8	Remaining Capacity	Ah			Measurand
9	Backup Time	Hrs			Measurand
10	Battery mode		1.Charging 2. Discharging. 3. IDLE		Measurand
11	Battery Temperature	°C			Measurand
12					
13	Over current on Charge alarm		normal	operated	status
14	Over current on Discharge alarm		normal	operated	status
15	Over Temperature on Charge alarm		normal	operated	status
16	Over Temperature on Discharge alarm		normal	operated	status
17	Over current on Charge Protection		normal	operated	status
18	Over current on Discharge Protection		normal	operated	status
19	Over Temperature on Charge Protection		normal	operated	status
20	Over Temperature on Discharge Protection		normal	operated	status
21	Over voltage Alarm		normal	operated	status
22	Over voltage Protection		normal	operated	status
23	Under voltage Alarm		normal	operated	status
24	Over voltage Protection		normal	operated	status

Signal list: Fire detection_ system

S.No.	Signal Name	Device	states	
1	Smoke sensor 1 state	Fiel Alarm Panel	normal	operated
2	Smoke sensor 2 state	Fiel Alarm Panel	normal	operated
3	Smoke sensor 3 state	Fiel Alarm Panel	normal	operated
4	…….	Fiel Alarm Panel	normal	operated
5	…..	Fiel Alarm Panel	normal	operated
6	Smoke sensor n state	Fiel Alarm Panel	normal	operated
7	Manual Call point 1 state	Fiel Alarm Panel	normal	operated
8	Manual Call point 2 state	Fiel Alarm Panel	normal	operated
9	Manual Call point 3 state	Fiel Alarm Panel	normal	operated
10	….	Fiel Alarm Panel	normal	operated
11	…	Fiel Alarm Panel	normal	operated
12	Manual Call point n state	Fiel Alarm Panel	normal	operated

Please note : Auxilairy supply healthiness of the Fire alarm system shall be monitored from the MCB's of Battery charger.

Auto-Mode Signals

S.No.	Signal name	data type	states	
1	Auto control mode enable cmd	SCO		
2	Auto control mode disable cmd	SCO		
3	Control mode status	SPI	manual	Auto
4	Auto close cmd status	SPI	INITIATED	COMPLETE

Power Quality Meter signal list			
S.No	**Signal Name**	**data type**	**Unit**
1	Crest Factor A PHASE	Short Measured Floating Point	
2	Crest Factor B_PHASE	Short Measured Floating Point	
3	Crest Factor C_PHASE	Short Measured Floating Point	
4	Crest Factor N_PHASE	Short Measured Floating Point	
5	CURRENT DISTURBANCE	Short Measured Floating Point	
6	CURRENT UNBALANCE WORST	Short Measured Floating Point	
7	K FACTOR R_PHASE	Short Measured Floating Point	
8	K FACTOR Y_PHASE	Short Measured Floating Point	
9	K FACTOR B_PHASE	Short Measured Floating Point	
10	%THD CURRENT R_phase	Short Measured Floating Point	%
11	%THD CURRENT Y_phase	Short Measured Floating Point	%
12	%THD CURRENT B_phase	Short Measured Floating Point	%
13	%THD CURRENT NEUTRAL	Short Measured Floating Point	%
14	%THD VOLTAGE R_N	Short Measured Floating Point	%
15	%THD VOLTAGE Y_N	Short Measured Floating Point	%
16	%THD VOLTAGE B**_N**	Short Measured Floating Point	%
17	VOLTAGE DISTURBANCE	Short Measured Floating Point	
18	VOLTAGE DISTURBANCE WORST	Short Measured Floating Point	

ANNEXURE- C – SPARES REQUIREMENT

Sl.No	EQUIPMENT	QTY	UOM
1	CPU Module	1 no's of Each type	nos
2	DI modules	10% of total no's of DI channels in RTU BOM	nos
3	DO module	10% of total no's of DO channels in RTU BOM	nos
4	AI Module	10% of total no's of AI channels in RTU BOM	nos
5	Rack (Chassis) /IO Extension module	1	nos
6	Ethernet Switch	1 no's of Each type	nos
7	Ethernet Switch, 28 ports 8 TX (FE) 16 FX (FE) Multimode LC type ,2FX (GbE) ,2TX GbE, 48V DC, 48V DC ,Dual Redundant Power supply	1	nos
8	DC to DC Converter (220 V to 48 V DC)	1	nos
9	GPS receiver System(along with antenna & Cable)	1	nos
10	Interposing contactors 48VDC	10% of total no. of Interposing relays in RTU BOQ	nos
11	OFC Patch Cables	20 % of each type (length) in RTU/SAS BOQ	nos
12	Prefab CAT 6A patch cables (5 Mtr Each)	5	nos
13	FLUKE –17B/117 True RMS multimeter	1	nos
14	FO Attenuation Tester	1	nos

ANNEXURE- D – COMMUNICATION ARCHITECTURE

Substation Automation System Architecture Specifications

1.1	SAS Architecture	Shall be a distributed architecture with Bay Oriented Monitoring, protection & control and shall be as per latest IEC 61850 Standard. Functions should be Object oriented and shall be modeled as closed as possible to the processes. Substation automation system shall comply with IEC 62439-3 Clause4 for Parallel Redundancy Protocol (PRP) based on the redundancy of the Ethernet Network Infrastructure.i.e dual Ports in IED's/BCU's, Dual PRP LAN(FO/RJ45), Ethernet Switch Redundancy, RTU CPU /port redundancy.
1.2	QoS (Traffic Priority)	Use IEEE 802.1p Sampled Values (Highest) GOOSE(High) MMS(medium) Engineering (Low)
1.3	Cybersecurity	All the devices shall be as per latest revisions of IEC 62351 and ISA 62443 for Protocol security and system hardening.
1.4	Ring redundancy	Switches with HSR capabilities shall be used to create redundant ring architecture ensuring zero frame loss during Switch failure.
1.5	Network topology	Separate physical or logical networks for process bus,Station bus and System BUS.
1.6	Time synchronisation	IEEE-1588 PTP in accordance with IEC 61850-9-3.Grand master clock + Transparent /boundary clocks (IED's , RTU Ethernet Switches)
1.7	GOOSE Latency	End to End latency <4ms shall be validated during FAT/SAT.
1.8	Factory Acceptance Test	PRP/HSR Fail over tests, PTP accuracy tests, security scans.
1.9	Multifunctional meter	• MFM's shall be connected in a daisy chain using Screened Shielded twisted pair cable. Not more than 8 MFM's shall be connected in

		a single loop. • Polling by RTU-A and RTU –B (hot –standby redundancy.
1.10	Power Quality Meters	• Shall be connected to station bus Ethernet Network in separate VLAN. Polling by RTU-A and RTU –B (hot –standby redundancy.
1.11	Smoke detector system	• Shall be integrated to RTU through modbus RTU communication . Polling by RTU-A and RTU –B (hot –standby redundancy.
1.12	Grid DC Monitoring System.	• Battery charger /battery Bank status signals and measured parameters as per standard signal list (refer annexure A) shall be integrated through a Modbus RTU/TCP supported device .The device shall be BRPL approved/ IEC/IS compliant.
1.13	Health status /Watchdog	Watch dog contacts of All the ethernet switches, GPS etc shall be hardwired to IO's of RTU/IED.
1.14	PRP	Two completely independent LAN's : LAN A and LAN B. IP schema for the Station communication shall be provided during Project engineering stage. PRP supervisory frames shall be used for link monitoring. Bidder shall submit necessary compliance certificate for PRP from Statutory authority/agency such as KEMA, UCA, CPRI etc
1.15	GOOSE Filtering	IGMP snooping feature in the Ethernet switches shall be enabled.
1.16	**HMI Workstation (as per tendered BOQ)** .	
1.17	HMI specifications	For real time monitoring, logging and reporting of status, events, alarms, trends, Automatic Disturbance records handling and storage.Shall

		conform to IEC 61850.Shall Support redundant client/server architecture.Software licences shall be perpetual covering OS, runtime,development, historian, driver packages, Hot standby redundancy etc.
1.18	Hardware specifications	(i) Industrial grade PC with i7 processor or equivalent industrial grade processor. (ii) RAM 16 GB or higher (iii) Storage SSD 1 TB or higher (iv) Display 21'' to 24''. (v) Dual Ethernet ports for redundant networks. (vi) Dual Power supply: 220 V DC/48V DC as per the site requirements. (vii) Shall support RAID-1/RAID -5 redundancy. (viii) Hardened for Cybersecurity. RBAC, (ix) Secure Engineering work station. (x) Events shall be time tagged with <1ms accuracy. (xi) Time synch through NTP/SNTP/PTP from station GPS. (xii) Shall support PRP,HSR etc
1.19	Local analytics, asset management	Local fault anaytics, anomaly detection, firmware management, configuration management.

SAS ARCHITECTURE :-
66/11kV GIS SUBSTATION

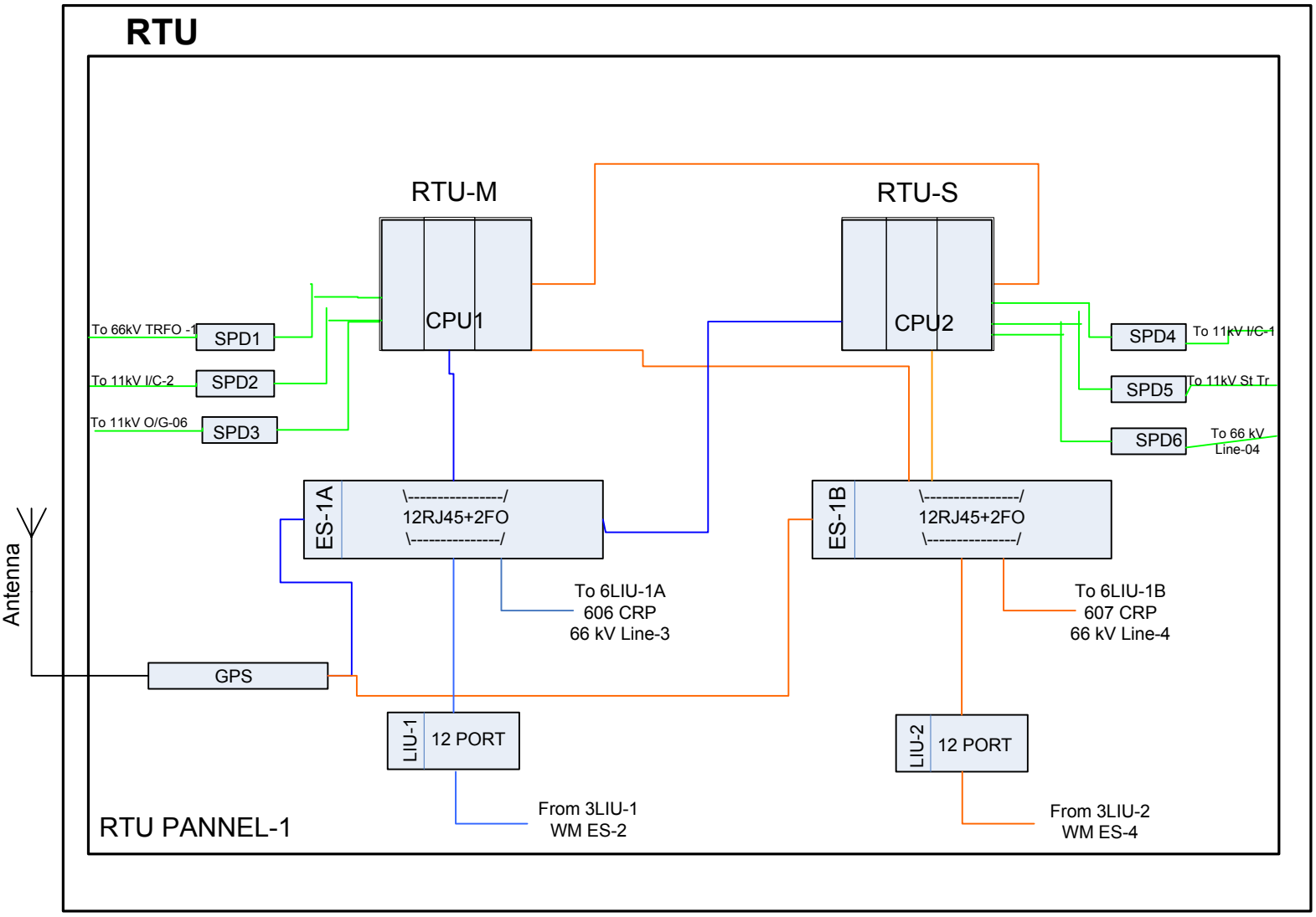

SAS NETWORK ARCHITECTURE

66kV

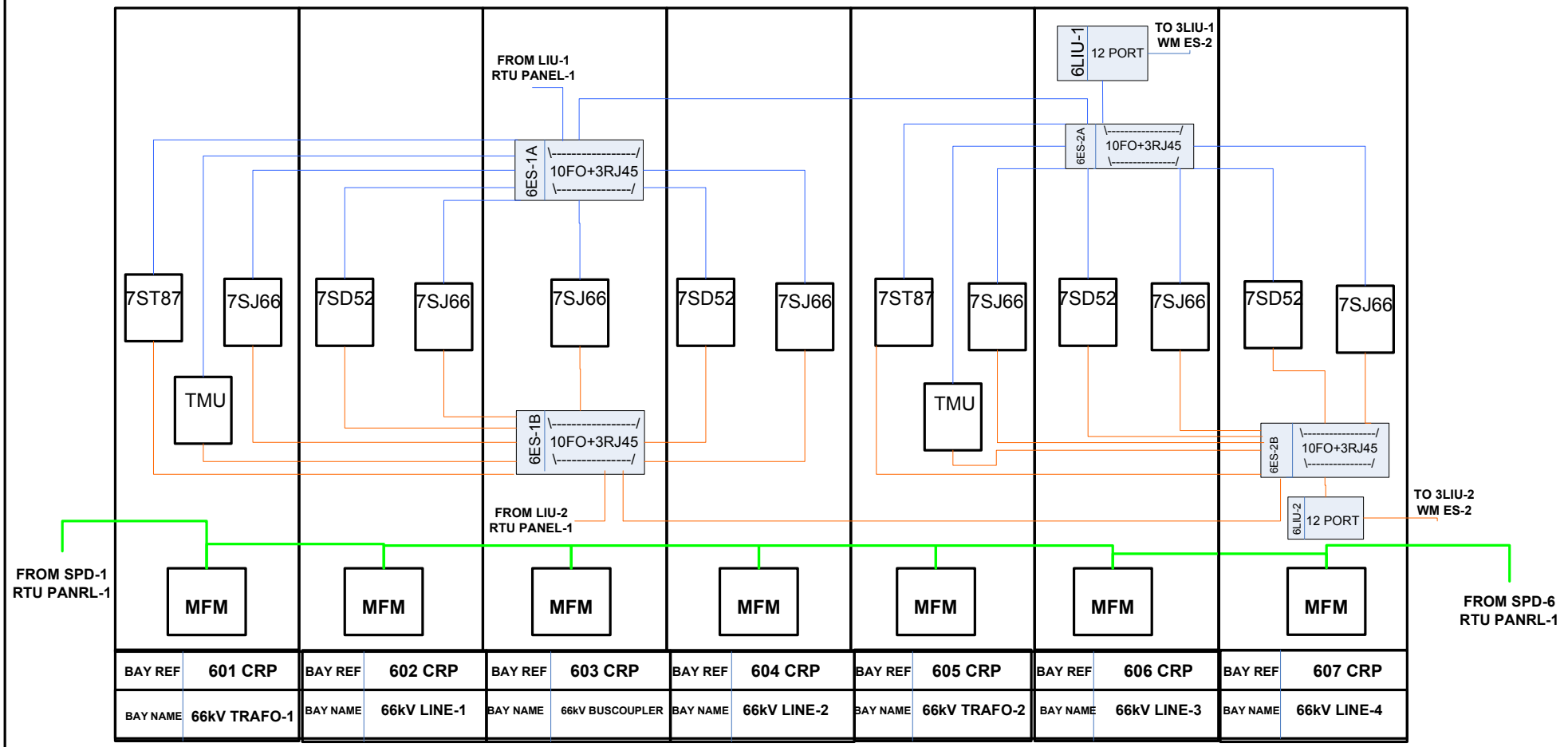

SAS ARCHITECTURE :-
66/11kV GIS SUBSTATION,

11kV

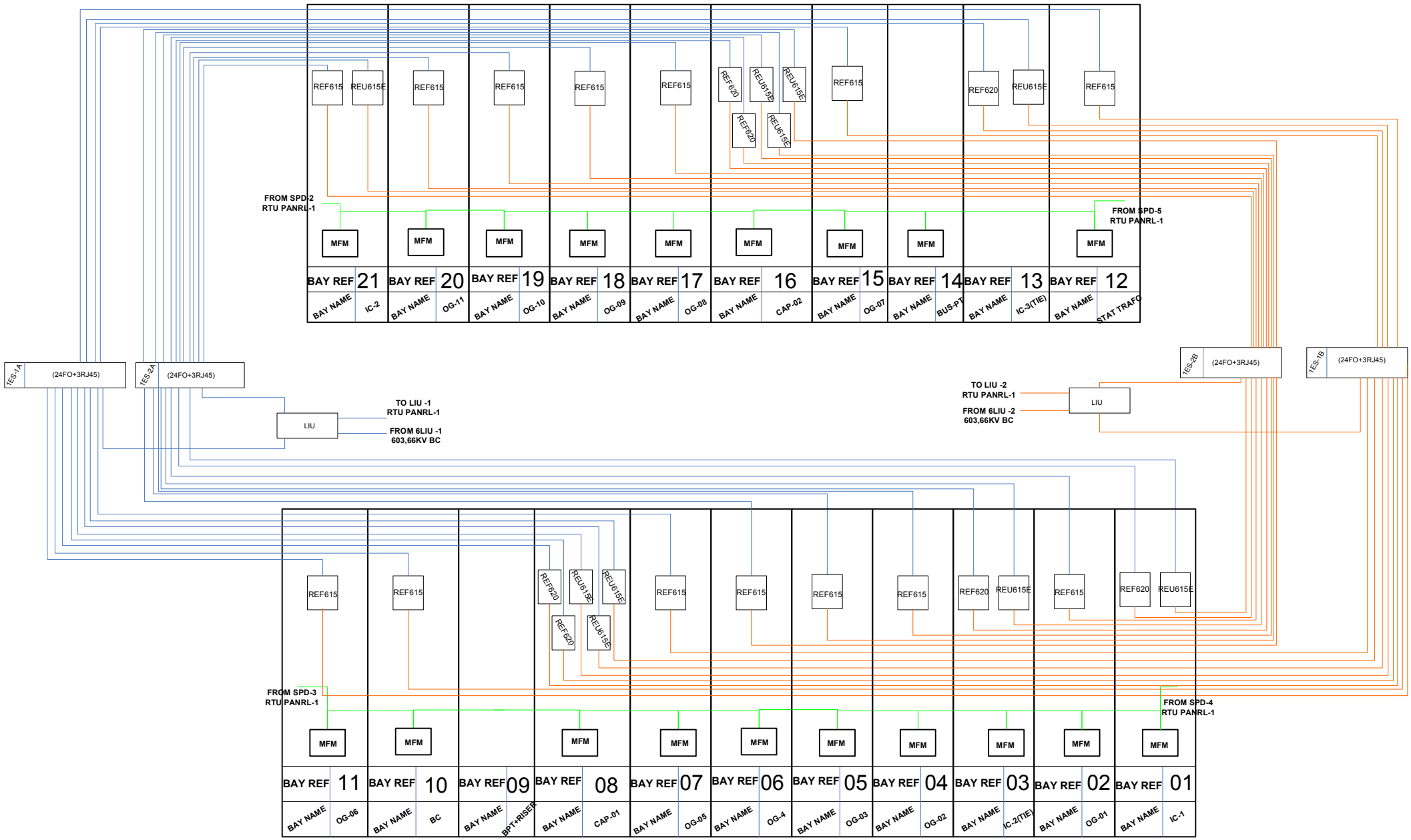

Annexure E

SCADA ADAPTATION AND INTEGRATION SERVICES.

Scope of Work includes:

1.1 Erection of RTU Panel

a) Rigging/lifting of RTU Panel shall be carried out only by skilled personals. OEM user manual shipped along with RTU to be referred for the same.

b) RTU shall have a 1000 mm of free space on all the sides of installation area for ease in access to RTU for day to day maintenance activities.

c) RTU base frame shall be fastened to ground using appropriate non corrosive brass fasteners and nuts.

1.2 Mounting of Switch Panel

a) Ensure that the Wall mounted panel has at least 500 mm of free space on all sides.

b) Panel shall be fastened to ground using appropriate non corrosive brass fasteners and nuts.

1.3 Installation of Cable trays.

a) Cable trays must be appropriately supported using non corrosive high quality MS angle supports/tie rods. The type of support requirement shall be as per site requirements.

b) If the cable trays are overfilled beyond the certain criteria established by NEC, another cable tray system shall be added above or below the existing cable tray.

c) To ensure safety cable tray system shall be grounded before the cables are energized.

d) Cable trays must be labeled with the cables they contain.

e) The strength of the cable tray, the cable tray loading and the space between the supports, all the factors has to be taken care of during pre-installation planning of cable systems.

f) NEC guidelines for the safe installation of Cable trays shall be referred.

1.4 Laying of Control Cables between Control and relay Panels to RTU Panel

a) Cable shall be laid in cable trays/trench as per the cable schedule.

b) Cable Schedule shall be provided which will define the two end points of the cable and type of cable. It is the bidder's responsibility to survey the site and make a schedule to lay the cable through the shortest path available.

c) Extra cable if laid by the contractor by mistake shall be be removed by contractor at no extra cost to BRPL.

d) Cable shall be labeled at both the end of terminations and at 5 meter intervals by punching aluminum tags and tying suitable by nylon ties, which shall be arranged by contractor at his cost.

e) All the cables laid on trays shall be neatly dressed up and clamped up or tied to the tray.

f) At least 300 mm clearance shall be provided between LT Power cable/Control cable LT Control Cable and LT instrumentation cable.

g) Civil work including excavations, brick work, plastering etc wheresoever's required shall be carried out by contractor.

h) After cable laying excavated area shall be refilled and restored by the contractor. Removal of debris/related material shall be under contractors scope.

i) The Quantities in BOQ are tentative only and actual quantities of cable laid, civil work etc to be measured and recorded after joint inspection with BRPL Site Engineer In-charge and contractor.

1.5 Laying of RS 485 cable from Multifunctional meters to RTU Panel.

a) All the devices in a communication bus shall be connected in a daisy chain fashion. Any other method of connecting the devices is not recommended as it might cause communication issues or system failure.

b) Maximum length of the cable shall not be longer than 800m.

c) In order to avoid signal reflections it is recommended to connect 120Ω terminating resistance in the last device in the chain.

d) Cable shield shall be grounded at one side only, either at RTU end or at MFM (C&R Panel) end.

1.6 Laying, Crimping and tagging of CAT 6 Cables.

a) Laying of cables near the Power cables or any source of EMI shall be avoided.

b) Cable length shall not exceed 100 Mtrs.

c) Network analyzer shall be use to check the network interference if the cable is laid near Power cables/ EMI Source.

d) CAT6 cables shall be crimped using TIA568-B standard.

1.7 Laying ,Splicing and termination of FO Cables.

a) All fibers shall be spliced and terminated in optical Fiber Patch Panel.

b) For FO patch Cable laid in trench/ tray, each Patch cable shall be contained in 16mm GI flexible conduit/ HDPE pipe.

c) The quality of the splice connection shall be tested thoroughly by highly precise insertion loss meter or an OTDR meter. The values shall be in permissible range and the report for the same shall be submitted.

d) Laying of FO Cable shall confirm to manufacturer's recommendation covering the mechanical constraints such as the maximum bending radius.

e) Machine Printed label strips shall be used for marking port of the LIU Panel

1.8 Glanding and tagging of Control Cables

a) Installation of cable glands shall be carried out by a competent and skilled personal.

b) Cable glands shall not be installed /dismantled whilst the circuit is live.

c) Unused Cable gland holes shall be covered with proper size and quality grommets.

1.9 Ferruling, tagging and termination of Control cables.

a. Printed ferrules (white pvc sleeves with black character markings) to be used for identifying cables/cores.

b. Printed ferrules shall be covered with transparent heat shrink tubes.

c. Printed, corrosion resistant Mettalic tags (high quality aluminium thickness 0.5mm-0.8mm) shall be used for tagging the control cables, armoured communication cables etc. Markings shall be made using laser etching, engraving and the same shall be durable and resistant to fading etc.Edges shall be smoothened to avoid cuts.

d. Printed stickers shall be used for identifying the OFC Patch cables inside the Control panels/Swicthgear panels etc.



Sample cable tag

2.0 Factory Acceptance Test

a. OEM/Bidder Shall submit the detailed FAT Procedure.

b. FAT at OEM factory/Work shop for RTU, SAS equipments, Cables etc shall be organized and arranged by Bidder .The number of BRPL Personals attending the FAT shall be decided by the BRPL Project in-charge, the same depends upon the duration and Quantum of inspection.

c. All the arrangements for Factory inspection Tavel, local conveyance, boarding lodging shall be under bidder scope.

d. The bidder shall arrange the type tests certificates for the following tests.

e. During FAT the Entire substation automation system including complete control and protection system to be supplied under project scope shall be tested for complete functionality and configuration in factory itself.

3.0 Erection, testing and commissioning

Bidder shall deploy a skilled manpower from OEM for RTU/SAS installation, configuration, Commissioning and testing activities.

a. Preparation of Cable Schedule, IO mapping schedule, SAS Architecture, Site Acceptance Test check list shall be in the scope of Bidder.

b. Cable schedule , IO mapping schedule , SAS Architecture and other relevant documents related to ET& C work shall be duly approved by BRPL Site-incharge.

c. Integration of Protection Relays/ IED's, TMU etc with RTU using IEC 61850 Protocol. Note: Relay .icd/.cid files along with signal mapping details shall be provided by protection team deployed at site..

d. Integration of Multifunctional meters, Fire alarm Panel, Battery charger , Battery bank (BMS System), Power Quality meter with RTU using modbus RTU /TCP IP Protocol .The mapping details and required manuals for the same shall be arranged by BRPL Project Engineer-incharge. However the same shall be in Bidders scope for Turnkey Projects.

e. Hardwired interfacing of DI, DO AI Signals to RTU as per IO mapping schedule.

f. Testing of all the signals from Master Contol Centre. The same shall be co-ordinated , scheduled and witnessed by BRPL Site In charge

4.0 Quality & Safety Requirements.

a. The OEM shall submit a certificate in respect of compliance of safety guidelines.

b. OEM shall submit the user safety installation manuals of all the electronic/Electric items in RTU Panel/ Ethernet Switch Panels.

c. The safety ground shall be isolated from the signal ground and shall be connected to the ground network. Safety ground shall be a copper bus bar. The contractor shall connect the panel's safety ground to the grid grounding network. Separate grounding (2Pits) is created for communication equipments and Signal ground shall be connected to the communication equipment signal ground

d. **Antistatic mat** shall be installed in front of RTU Panel to protect the RTU/electronic modules from Static discharges during commissioning and normal day to day maintenance activities.

5.0 RTU SOFTWARE REQUIREMENTS

a. RTU Software shall be upward compatible with all the versions of Windows Operation system.

b. All the necessary licenses (PLC/Archive/HMI etc) shall be in scope of supply.

c. RTU software shall be supplied in Full/Complete version.

d. RTU Software setup /licenses shall be provided in a flash drive/Hard lock dongle.

e. The database configuration file must be upload able/ downloadable from/to RTU.

f. The RTU software and database generation should be sized to accommodate for additional 50% of the basic I/O count without requiring software or database regeneration or License.

g. RTU shall have capability of Integration upto 120 IED's through IEC 61850 client server protocol.

h. RTU shall be accessible through Remote through Web browser over secure connection (https/SSL).

i. RTU shall have the feature of remote diagnostics, downloading of System security events and alarms logs through Remote/Syslog server.

j. RTU shall have the feature to analyze the data packets in/out through Ethernet and serial pots of RTU.

k. The software shall be able to configure IED's, add additional variables, modify interlocks for additional Bays in Future.

l. HMI System (if included in Tendered BOQ) shall include the software tools for the picture editing, engineering and system configuration and all the required necessary standard libraries.

6.0 Transport/logistics of Material

a) Loading and unloading of Material at Site and BRPL store shall be under bidders scope.

b) Loading and unloading of material shall be done by a certified, specialized

and skilled manpower/agency.

c) Watch & ward of Material (for BRPL Unmanned Grid Stations) after delivery shall be under bidders scope.

7.0 Documentation

Following documents shall be submitted for BRPL's approval during detailed engineering

a. System Architecture Drawing

b. Hardware Specifications.

c. Functional Design Specification documents.

Following documents shall be submitted during the course of Project execution.

a. Approved System Architecture.

b. Approved RTU drawings.

c. Cable Schedule

d. IO signal mapping Details.

e. List of labels/tags.

f. Product manuals/operator manuals.

g. Assembly drawings.

h. SAT (Site Acceptance Test) procedure.

8.0 Training

a. The classroom training shall be provided to all the designated personals of BRPL for 4-5 days at OEM Factory /Facility.

b. The cost of travel, transportation, and per diem for the trainees shall be borne by BRPL.

c. Suitable training manuals/handouts shall be provided to all the trainees.

d. Training Shall be provided on configuration, installation, commissioning aspects of RTU, DCU,BCU and Numerical Relay – BCPU.All Expenses (Air & Local Travel, boarding and Lodging for 4 to 5 persons) at factory/training center(5 days) comes under Bidders scope

TECHNICAL SPECIFICATION

FOR

11KV AUTO SWITCHED CAPACITOR BANK INDOOR / OUTDOOR TYPE

INDEX

1.0 SCOPE OF SUPPLY 3
2.0 CODES & STANDARDS 3
3.0 SERVICE CONDITIONS 4
4.0 CAPACITOR BANK 4
5.0 SINGLE PHASE CAPACITOR UNIT 6
6.0 VACUUM CONTACTOR/SWITCH FOR AUTO SWITCHING 7
7.0 SERIES REACTOR 7
8.0 ISOLATOR 8
9.0 PERFORMANCE 8
10.0 LABELS & FINISH 8
11.0 INSPECTION & TESTING 9
12.0 DEVIATIONS 9
13.0 MANDATORY SPARES 9
14.0 GUARANTEED TECHNICAL PARTICULARS 10

1.0 SCOPE OF SUPPLY

a. This specification covers the design, manufacturing, testing, supply, erection & commissioning of 7.2 MVAR (First step of 0.9 MVAR , Second and third step of 1.8 MVAR and last step shall be of 2.7MVAR), 11KV three phase outdoor Auto Switched Capacitor Bank with bus bar arrangement for outdoor installation including 0.2% series reactors, capacitor switch/contactor, Isolator cum earth switch, HT fuses, RVT and all necessary equipment for auto switching.
b. This specification shall be used in conjunction with all specifications, data sheets, single line diagrams, and other drawings attached to the tender.

2.0 CODES & STANDARDS

Indian Electricity Rules	
Indian electricity act	
CBIP manual	
IS 13925 part 1,2 & 3	Shunt capacitors above rated voltage 1000v
IS 11298 part 3	Plastic films for capacitors
IS 9921-1985	Isolator
IS 5553	Series reactor
IS 2099	Bushings for voltages above 1000v
IS 12672	Internal fuses & disconnector for shunt capacitors
IS 3156 -3	Residual voltage Transformer
IS 13067	Impregnant for power capacitors
IS5	Color of mixed paints
IS 15086	Surge arrestor
IS 3070 (Pt 3)	Surge arrestor
IS 2629	Recommended practice for Hot dip galvanizing of steel
IS 4759	Hot dip Zinc coating on Steel structures and other allied products
IEC 60871	Shunt capacitors for AC power Systems
IEC 61000	Automatic Power Factor Controller
IS 9920-2002	Vacuum Contactors/Capacitor Switch

In the event of direct conflict between various order documents, the precedence of authority of documents shall be as follows -

i. Guaranteed Technical Particulars (GTP)
ii. Specification including applicable codes, standards
iii. Approved Vendor Drawings
iv. Other documents

3.0 SERVICE CONDITIONS

3.1	Max Ambient Temperature	50 deg C
3.2	Max Daily average ambient temp	40 deg C
3.3	Min Ambient Temp	0 deg C
3.4	Maximum Humidity	95%
3.5	Minimum Humidity	10%
3.6	Maximum annual rainfall	750 mm
3.7	Average no of rainy days per annum	60
3.8	Rainy months	June to Oct
3.9	Altitude above MSL	300 M
3.10	Seismic Zone	IV

4.0 CAPACITOR BANK

4.1	Capacitor Scheme	3 Phase, 7.2MVAR @ 11KV, open delta
4.2	Switching	Total steps shall be -First step of 0.9 MVAR , Second and third step of 1.8 MVAR and last step shall be of 2.7MVAR. Auto switching will be controlled by APFC relay mounted in 11kV Capacitor Bank.
4.3	Service location	Suitable for outdoor use
4.4	Residual voltage transformer	Each RVT in each step shall be connected to NDR provided on the switchgear panel.
4.5	Voltage ration	11Kv/√3:110√3:190V
4.6	HT capacitor bank assembly	a. Individual single phase capacitor units mounted on steel rack & connected externally by sleeved flexible copper connectors to form double star. b. Sleeves to be Red, Yellow, Blue, & Black in colour.
4.7	Interchangeability	Between various single phase capacitor units without disturbing other units
4.8	Capacitor bank enclosure	For enclosing complete capacitor bank including capacitor units, Reactors, flexible copper connectors, RVT, terminal bus bar. Enclosures shall be provided with IP65 protection.
4.9	Enclosure size	Shall fit all the equipments and as per the site requirement.
4.10	Enclosure mounting	Free standing on RCC plinth / slab
4.11	Enclosure Material	Ms Steel
4.12	Degree of enclosure protection	IP65
4.13	Enclosure	Ms Steel, Vermin and dust proof

4.14	Bus bar for HV cable termination	One for each phase mounted on porcelain or epoxy insulators
4.15	Bus bar material	Tinned copper, sized for 150% of rated current and rated fault duty
4.16	Bus bar arrangement	Suitable for Indoor termination of HT cable size up to 2 x 3C x 300sqmm for each phase
4.17	Residual voltage transformer	For Indoor application
a	Voltage class	Suitable for system rated voltage
b	Ratio	11Kv/√3:110√3:190V
c	Accuracy class	0.5 / 3P
d	Burden	50VA / 50VA
e	Material	Cast resin
f	Mounting	Inside panel
g	Terminal marking	To be provided on RVT enclosure
h	Primary terminals	Brought out of RVT enclosure through insulator bushing of voltage class equal to rated capacitor voltage
i	Secondary terminals	Brought out in a terminal box mounted on RVT enclosure
4.18	External hardware for HT capacitor bank enclosure (nuts/bolts/handles)	Stainless steel
4.19	Series Reactor	Each Capacitor bank step shall be provided with suitable series air cored reactor.
4.20	Rated current	The reactor shall be rated for 130% continuous current. The short time rating shall be 16 times the normal current for 2 sec.
4.21	Sizing	Reactors shall be suitably designed to limit overloading due to presence of harmonics in the system as per recommendations of IS13925. Design calculation shall be submitted at the time of drawing approval
4.22	GA drawing	Manufacturer shall submit the G.A. Drawings for Capacitor Bank with mounting of series reactor inside the bank.

5.0 SINGLE PHASE CAPACITOR UNIT

5.1	Single phase capacitor unit	Totally enclosed, leak proof, dust proof suitable for outdoor application, comprising individual capacitor elements connected in series & parallel groups. Continuous operating current shall be minimum 1.43 times to max. 1.65 times as per clause 6.2 of IS 13925.
5.2	Capacitor unit size	Preferred size is 200kVAR, however higher unit sizes may be considered if the space availability at site is scarce
5.3	Capacitor element	Developed from alternate layers of conducting metal foil & dielectric film
5.4	Conducting layer material	Aluminum foil
5.5	Dielectric material	Hazy Poly Propylene (APP), Double layer minimum
5.6	Cooling	Natural air
5.7	Impregnating liquid	Non PCB(Poly chlorinated Biphenyl), less toxic, with low bio-accumulation and bio-degradable liquid filled under vacuum
5.8	Capacitor unit enclosure	Fabricated from sheet metal CRCA steel of thickness 2mm minimum, hermetically sealed & hydraulically tested
5.9	Discharge device	For each single phase capacitor unit
5.10	Internal fuse	Metal alloy fuse of suitable rating as per IS 12672 should be provided for each capacitor element. Residue of fuse after operation shall not contaminate the impregnating liquid. The fuse shall not deteriorate when subjected to inrush current. The fuse assembly shall be distinct and separate from the element packs such that it shall isolate only the faulty element packs and the operation of a fuse under worst condition does not affect the other healthy elements.
5.11	Surge arrestor	Gap less metal oxide type
5.12	Rated voltage	9kV
5.13	Maximum continuous operating voltage	7.65kV
5.14	Discharge current	5kA
5.15	Spare capacitor unit	One capacitor unit for each bank

6.0 VACUUM CONTACTOR/SWITCH FOR AUTO SWITCHING

6.1	Rated Voltages	12 KV
6.2	Rated Continuous Current	200% of full load current (minimum) of unit being switched
6.3	Rated Capacitor Switching Current	150% of full load current (minimum) of unit being switched
6.4	Frequency	50 Hz
6.5	Control supply	230 V Single phase AC supply
6.6	Type	Vacuum
6.7	Installation	Outdoor
6.8	Mechanical Endurance	100000 operations (minimum)
6.9	Electrical Endurance	100000 electrical operations at rated capacitive switching current (minimum)
6.10	Mechanical Indicator	To show number of operations
6.11	Trip lever	For emergency tripping operation
6.12	Closing lever	For capacitor bank discharging
6.13	Make	ABB/EPCOS/CGL/CONQUERENT

7.0 SERIES REACTOR

7.1	Series Reactor	Shall be provided fulfilling following requirement, a. Parallel switching of one bank with another two bank in service b. Suitable design calculation shall be submitted at the time of drawing approval c. Reactors shall be suitably designed to limit inrush current with proper calculation to be submitted to BYPL. d. The series reactor shall be designed to suit the final capacity of Capacitor Bank e. The manufacturer shall submit the G.A. Drawings for Capacitor Bank with mounting of series reactor inside the bank
7.2	Series reactor continuous rating	0.2% of capacitor bank rating
7.3	Series reactor rated voltage	Same as capacitor bank rated voltage
7.4	Series reactor rated frequency	50Hz
7.5	Series reactor single phase unit connections	Connected between single phase capacitor units and neutral star point
7.6	Series reactor type	Dry type with air natural cooling
7.7	Series reactor power frequency withstand voltage	28 KV
7.8	Series reactor lightening impulse withstand voltage	75 KV

7.9	Series reactor short time withstand current rating for 3 seconds	16 times capacitor rated current at 130% rated voltage

8.0 ISOLATOR

8.1	Installation	Indoor
8.2	Rated Voltage	11 KV
8.3	Type	Single throw, Double break, off load type, triple pole and horizontal gang operated with earth switch. Mechanical interlock should be provided between isolator and earth switch.
8.4	Operation Type	Motarized

9.0 PERFORMANCE

9.1	Over voltage operation	as per IS 13925 part1
9.2	Over current operation	as per IS 13925 part1
9.3	Operating temperature category	+5/C as per IS 13925 part1
9.4	Discharge characteristic as per IS 13925 part1	a. Each capacitor single phase unit residual voltage after disconnection from mains supply shall be 50V (maximum) within 10 minutes b. Capacitor bank residual voltage after disconnection from mains supply shall be 50V (maximum) within 10 minutes
9.5	Power loss and tangent of Loss angle (tan δ)	To be specified by manufacturer as per IS 13925 part1

10.0 LABELS & FINISH

10.1	Rating plate for HT Capacitor bank	
10.2	Material	Anodized aluminum 16SWG
10.3	Background	Satin silver
10.4	Letters, diagram & border	Black
10.5	Process	Etching
10.6	Bank Name plate details	Mfg name, Mfg Sr. No., Month & year of Mfg, equipment type, total output rating, Bank Capacitance in µF, Bank watt losses, Owner name & order number, Temp. category, connection diagram, Guarantee period.
10.7	Rating plate for each single phase capacitor unit	Anodized aluminum with white character on black background and details as per clause no 10.1 of IS 13925
10.8	Unit Name plate details	Mfg name, Mfg Sr. No., Month & year of Mfg, equipment type, total output rating, unit Capacitance in µF, unit watt losses, Temp. category, Discharge device rating, connection diagram, Owner name & order number, Guarantee period, unit wt. in kG,

10.9	Danger plate on front & rear side of enclosure	Anodized aluminum with white letters on red background
10.10	Painting - Capacitor single phase unit	
10.11	Surface preparation	Shot blasting or chemical 7 tank process
10.12	External finish	Powder coated pure-polyester base Mat finish, shade– Siemens Gray RAL 7032, uniform thickness 50 microns minimum
10.13	Painting frame enclosure	a. Chemical 7 tank process for surface b. Hot dipped Galvanized with uniform thickness 65 microns minimum as per IS 2629 and 4759.

11.0 INSPECTION & TESTING

11.1	Type test	Equipment of type tested quality only, type test certificate to be submitted along with offer.
11.2	Routine test	As per relevant Indian standard
11.3	Acceptance test as per IS	To be performed in presence of Owner at manufacturer works, as per relevant Indian standard along with BOM.

12.0 DEVIATIONS

Deviations from this Specification shall be stated in writing with the tender by reference to the Specification clause/GTP/Drawing and a description of the alternative offer. In absence of such a statement, it will be assumed that the bidder complies fully with this specification. No deviation will be acceptable post order.

13.0 MANDATORY SPARES

Following spares have to be provided with capacitor banks

a. Capacitor Units – 2 nos
b. Series Reactors – 2 nos
c. Vacuum Switch – 2 nos

14.0 GUARANTEED TECHNICAL PARTICULARS

S No.	Description	Data to be filled by bidder
15.1	Manufacturer/ Make	
15.2	Manufacturer equipment type	
15.3	Conformance to service conditions as per specification clause 3.0	
15.4	Conformance to capacitor design requirements as per specification clause no 4.0 to 8.0 – Yes/No	
15.5	Submission of deviation sheet for each specification clause no. – Yes/No	
15.6	Capacitor single phase unit	
15.7	Enclosure sheet metal thickness in mm	
15.8	Hermetic sealing method (pressure welding / gas welding / sealant / if any other pl specify)	
15.9	No. of series group / unit	
15.10	No. of parallel elements / series group	
15.11	No. of APP layers – double / triple	
15.12	Thickness of APP film	
15.13	Thickness of Al foil	
15.14	Maximum voltage stress per APP layer	
15.15	Rated capacitance in micro farad	
15.16	Output at rated system voltage (in KVAR)	
15.17	Rated current in Ampere	
15.18	Overall capacitor bank rating	
15.19	At rated system voltage (in KVAR) (requirement is 7.2MVAR at 11KV)	
15.20	Rated current in Ampere	
15.21	Connectionr? – Yes / No	
15.22	Spare capacitor unit offered? Yes/No.	
15.23	Series Reactor rating details	
15.24	Capacitor bank insulation level	
15.25	Impulse withstand voltage (Kv peak)	
15.26	One minute power frequency withstand voltage (Kv rms)	
15.27	Bus bar cross section in sq mm	

S No.	Description	Data to be filled by bidder
15.28	Bus bar short time withstand capacity in KA for 3 sec	
15.29	Bus bar support insulator make & type	
15.30	Bus bar support insulator voltage class	
15.31	Capacitor unit maximum temperature rise above ambient in Deg Celsius	
15.32	Capacitor unit power loss in kilowatt	
15.33	Capacitor bank total power loss in kilowatt	
15.34	Discharge device type & material	
15.35	Residual voltage transformer for each step	
15.36	Capacitor vacuum switch	
15.37	Switching Capacity	
15.38	Electrical Endurance	
15.39	Mechanical Endurance	
15.40	Isolator	
15.41	Capacitor unit – width x breadth x height	
15.42	Capacitor bank – width x breadth x height	
15.43	Enclosure - width x breadth x height	
15.44	Weight in Kg	
15.45	Capacitor Single Phase Unit	
15.46	Steel enclosure	
15.47	Total assembly	
15.48	Residual voltage Transformer as per clause no 4.18 – Yes / No	
15.49	Conformance to labels & finish as per specification	
15.50	Copy of type test certificate submitted? – Yes / No	
15.51	Submission of GA drawing / documentation	

BSES

Technical Specification

Of

Power Transformer

Specification no – BSES-TS-24-TRPU-R1

Rev:		1
Date:		28 Nov 2025
Prepared by	Amardeep / Alok Mandal	
Reviewed by	Uttam Shukla	
Approved by	Deepti Sharma	

INDEX

RECORD OF REVISION 3
1.0 SCOPE OF SUPPLY 4
2.0 CODES & STANDARDS 4
3.0 MAJOR DESIGN CRITERIA & PARAMETERS OF THE TRANSFORMER 5
4.0 CONSTRUCTION & DESIGN 6
5.0 MINIMUM PROTECTIVE DEVICES ON TRANSFORMER 17
6.0 FITTINGS AND ACCESSORIES ON TRANSFORMER 18
7.0 OLTC 22
8.0 APPROVED MAKE OF COMPONENTS 25
9.0 QUALITY ASSURANCE 27
10.0 PROGRESS REPORTING 28
11.0 INSPECTION & TESTING 28
12.0 PACKING, SHIPPING, HANDLING AND STORAGE 34
13.0 COMMISIONING SUPPORT 35
14.0 TRAINING 35
15.0 DEVIATIONS 35
16.0 DRAWINGS AND DOCUMENTS 35
ANNEXURE-A- SCOPE OF SUPPLY 38
ANNEXURE-B- SERVICE CONDITIONS 39
ANNEXURE-C-TECHNICAL PARTICULARS (DATA BY OWNER) 40
ANNEXURE-D- TECHNICAL SPECIFICATION FOR TRANSFORMER OIL 44
ANNEXURE-E-SPECIFICATION FOR SILICAL GEL BREATHER 46
ANNEXURE-F- MANUFACTURING QUALITY ASSURANCE PLAN 49
ANNEXURE-G-TECHNICALSPECIFICATION OF MATERIAL TRACKING–GPS DEVICE..71
SCHEDULE-A-GUARANTEED TECHNICAL PARTICULARS (DATA BY SELLER).....72
SCHEDULE-B-GUARANTEED TECHNICAL PERTICULARS OF TRANSFORMER OIL.... 81
SCHEDULE-C-RECOMMENDED SPARES (DATA BY SUPPLIER) 83

RECORD OF REVISION

Revision No	Item / clause no.	Nature of Change	Approved By
1	4.2.6.3	Winding insulation material	
1	11.1.4	Winding	
1	Annexure G	Copper conductor finishing	
1	Schedule A	Insulating material	

1.0 SCOPE OF SUPPLY

For scope of supply, refer Annexure A

2.0 CODES & STANDARDS

Material, equipment and methods used in the manufacture of power transformer shall conform to the latest edition of following:

IS 2026	Power Transformers
IS 2026-4	Terminal Marking, tappings and Connections for Power Transformers.
IS:3347	Dimensions for Porcelain Transformer bushing
IS:3637	Gas operated relays
IS:3639	Fitting & Accessories for power transformers
IS:4201	Application guide for CT's
IS:8478	Application guide for On-load tap changer
IS:10028	Code of practice for selection, installation & maintenance of transformers
IS 5561	Electrical Power Connectors
IS 5	Colors for ready mix paints
IS:335	Insulating oil
IS 6272	Industrial cooling fans
IS 12615	Three phase induction motors
IS/IEC 60034	Rotating Electrical Machines. (e.g. For Cooler Fan Motors.)
IS/IEC 60071	Co-ordination of Insulation.
IS 16227/IEC 61869	Current Transformers.
IS 8468/ IEC 60214	On Load Tap Changers
IS2026-7/IEC 60076-7	Loading Guide for Oil-Immersed Power Transformers.
IS 2026-8 /IEC 60076-8	Application Guide for Power Transformers.
IS 2026-10/IEC 60076-10	Determination of Transformer Sound Levels.
IS/IEC 60529	Degrees of Protection Provided by Enclosures (IP Code).
IS/IEC 60947	Low-Voltage Switchgear and Control gear.
IS/IEC 60137	Bushing for alternating voltage above 1000V
IS:1271/IEC 60085	Thermal evaluation and classification of electrical insulation
IEC 60076	Power transformers.
IEC 60156	Method for Determination of the Electric Strength for Insulating Oils.
IEC 60296	Specification for Unused Mineral Insulating Oils for Transformers and Switchgear.
IEC 60445	Basic& Safety principles for man-machine interface, marking and identification, Identification of Equipment Terminals and conductor terminals

BS 148	Determination of Transformer and Reactor Sound Levels.
BS 223	Application Guide for Power Transformers.
BS 2562	Terminal and Tapping Markings for Power Transformers.
	Indian Electricity Rules
	Indian Electricity Act
	CBIP manual

In the event of direct conflict between various order documents, the precedence of authority of documents shall be as follows:

a. Guaranteed Technical Particulars (GTP)
b. This Specification
c. Referenced Standards
d. Approved Vendor Drawings
e. Other documents

3.0 MAJOR DESIGN CRITERIA & PARAMETERS OF THE TRANSFORMER

3.1	Major design criteria	
3.1.1.	Voltage variation on supply side	+ / - 10%
3.1.2	Frequency variation on supply side	+ / - 5%
3.1.2	Transient condition	- 20% or + 10% combined variation of voltage and frequency
3.1.4	Service condition	Refer Annexure C
3.1.5	Insulation level	Refer Annexure C
3.1.6	Short circuit withstand level	Refer Annexure C
3.1.7	Overload capability	Refer Annexure C
3.1.8	Noise level	Refer Annexure C
3.1.9	Radio influence voltage	Refer Annexure C
3.1.10	Harmonic currents	Refer Annexure C
3.1.11	Partial discharge	Refer Annexure C
3.1.12	Parallel operation	Shall be designed to operate in parallel with transformer.
	Major parameters	
	Rating	Refer Annexure C
	Voltage ratio	Refer Annexure C
3.2.3	Vector group	Refer Annexure C
3.2.4	Impedance	Refer Annexure C
3.2.5	Losses	Refer Annexure C
3..2.5.1	No load loss	Refer Annexure C
.3..2.5.2	Load losses at principal tap	Refer Annexure C
3.2.6	Temperature rise top oil	Refer Annexure C
3.2.7	Temperature rise winding	Refer Annexure C
3.2.8	Flux density	Refer Annexure C
3.2.9	Current density	Refer Annexure C
3.2.10	Tappings on HV winding	Refer Annexure C
3.2.11	Design clearances	Refer Annexure C

4.0 CONSTRUCTION & DESIGN

4.1	Type	ONAN/ONAF, Copper wound, three phase, oil immersed with on load tap changer
4.1.1	Essential provision for ONAF cooling	See note 1 of Annexure C
4.1.2	Provision of mounting cooling fan at site in future at service condition.	Required
4.1.3	Provision of replacement of cooling fan at site in future at service condition	Required
4.1.4	Fan guard if fans mounted in future.	Required
4.2	Major parts	
4.2.1	Tank	
4.2.1.1	Material of construction	Robust mild steel plate without pitting and low carbon content
4.2.1.2	Plate thickness	Adequate for meeting the requirements of pressure and vacuum type tests as per CBIP. Test will be conducted on each transformer tank for design validation.
4.2.1.3	Welding features	i) All seams and joints shall be double welded ii) All welding shall be stress relieved for sheet thickness greater than 35 mm iii) All pipes, radiators, stiffeners, welded to the tank shall be welded externally
4.2.1.4	Tank feature	i) Adequate space at bottom for collection of sediments ii) Stiffeners provided for rigidity and Designed to prevent accumulation of water iii) No internal pockets in which gas / air can accumulate iv) No external pockets in which water can lodge v) Tank bottom with welded skid base vi) Tank cover sloped to prevent retention of rain water vii) Minimum disconnection of pipe work and accessories for cover lifting viii) Tanks shall be of a strength to prevent permanent deformation during lifting, jacking, transportation with oil filled ix) Tank to be designed for oil filling under vacuum x) Fitted with lifting lug to lift the tank cover only xi) Manhole of sufficient size required for

		inspection of core and winding xii) Oil level indicator for transportation
4.2.1.5	Flanged type adequately sized inspection cover rectangular in shape required for	i) HV line bushing ii) LV line bushing iii) LV neutral bushing and NCT connection iv) OLTC to winding connection from both sides v) Core assembly ear thing Inspection covers should be provided with jacking screws & handle and shall not weigh more than 25 KG . Overall design shall be in such a way that there shall not be any hindrance/overlapping of some other component, in front of any of the inspection covers.
4.2.1.6	Fittings and accessories on main tank	See under fittings and accessories
4.2.2	Conservator for the main tank	
4.2.2.1	Capacity	Adequate between highest and lowest visible levels to meet the requirement of expansion of oil volume in the transformer and cooling equipment from minimum ambient temperature to 100 °C
4.2.2.2	Conservator oil preservation system	By flexible rubber bag (air cell) placed inside conservator
4.2.2.3	Air cell material	Special type of fabric coated with special grade nitrile rubber, outer surface oil resistant and inner surface ozone resistant
4.2.2.4	Conservator features	i) Conservator shall be bolted into position so that it can be removed for cleaning / other maintenance purposes ii) Main pipe from tank shall project about 20 mm above conservator bottom for creating a sump for collection of impurities iii) Conservator minimum oil level corresponding to minimum temperature shall be well above the sump level iv) It shall be possible to remove and Replace the air cell if required v) Conservator to main tank piping shall be supported at minimum two points.
4.2.2.5	Fittings and accessories on main tank conservator	i) Prismatic oil gauge with NORMAL, MINIMUM and MAXIMUM marking. ii) End cover. iii) Oil filling hole with cap iv) Magnetic oil gauge with LOW LEVEL Alarm contact. v) Silica Gel dehydrating breather with Oil seal and dust filter with clear acrylic single piece clearly transparent cover resistant to UV

		rays. vi) Drain cum filling valve (gate valve) with locking rod and position Indicator made of Brass, 25 mm with Cover plate. vii) Shut off valve (gate valve) with position indicator made of Brass Located before and after Buccholz relay, 80 mm. viii) Flange for breather connection. ix) Air release valve on conservator (gate valve) made of Brass, 25 mm with cover plate x) Air release plug as required
4.2.2.6	Essential provision for mounting of conservator	Conservator to be mounted in such a manner that the top cover of the transformer can be lifted without disturbing the conservator
4.2.2.7	Essential provision for breather	i) Breather body should be Aluminum pressure die casted, shot blasted and power coated. ii) Container and oil cup should be 143R grade UV resistant polycarbonate. iii) All gaskets should be of nitrile cork rubber. iv) Breather should be flanged type not threaded type v) Breather piping shall not have any valve placed in between vi) Breather piping from conservator shall be supported in such a manner that the maximum unsupported length of the of the breather piping shall not be more than 3 meters vii) Breather shall be removable type mounted at a height of 1400 mm from ground level. viii) Silica Gel used in breather should be of ix) ROUND BALL type & 2.5 mm dia. Breather shall be tested for 0.35 kg/cm for all joints
4.2.3	Conservator for OLTC	
4.2.3.1	Capacity	i) Adequate between highest and lowest visible levels to meet the requirement of expansion of oil volume in the OLTC from minimum ambient temperature to 100 deg cent. . ii) Separate conservator to be provided for OLTC and Main tank
4.2.3.2	Conservator oil preservation system	Conventional
4.2.3.3	OLTC conservator features	Same as 4.2.2.4 except air cell features
4.2.3.4	Fittings and accessories on OLTC conservator	i) Prismatic oil gauge with NORMAL and MINIMUM marking

		ii) End cover iii) Oil filling hole with cap iv) Magnetic oil gauge with LOW LEVEL Alarm contact v) Silica gel dehydrating breather with oil seal and dust filter with clear acrylic single piece clearly transparent cover resistant to UV rays vi) Drain valve (gate valve)With locking rod and position Indicator made of Brass, 25 mm with cover plate vii) Shut off valve (gate valve) with Position indicator made of Brass ocated before oil surge relay, 25 mm viii) Flange for breather connection ix) Air release plug as required
4.2.3.5	Essential provision for mounting of OLTC conservator	OLTC conservator to be mounted in such a way that the OLTC can be inspected / maintained without disturbing the OLTC conservator
4.2.3.6	Essential provision for OLTC breather	i) Breather piping shall not have any valve placed in between ii) Breather piping from conservator shall be supported in such a manner that the maximum unsupported length of the of the breather piping shall not be more than 3 meters iii) Breathers shall be removable type mounted at suitable height from ground so that it can be attended to easily for inspection / maintenance
4.2.4	Radiators	
4.2.4.1	Material	Pressed Steel
4.2.4.2	Thickness	Minimum 1.2 mm
4.2.4.3	Features	Detachable type with lifting lugs, air release plug, drain plug, isolating valve top and bottom in each radiator, Radiator support from ground if required
4.2.4.4	Essential provision if radiators mounted separately	Expansion bellow to be provided in the pipes between main tank and radiator headers
4.2.4.5	Essential provision for all type of radiators provided	Radiator header pipes shall not originate from tank top cover to make the tank top cover removable at site with minimum manpower.
4.2.5	Core	
4.2.5.1	Material	High grade, non ageing, low loss, high permeability, grain oriented, cold rolled silicon steel lamination
4.2.5.2	Grade	Premium grade minimum M3 or better
4.2.5.3	Lamination thickness	Max. 0.23 mm with insulating coating on both sides
4.2.5.4	Design flux density at rated	As per manufacturers design.

	conditions at principal tap	
4.2.5.5	Maximum flux density at 10% over excitation / over fluxing	As per Annexure C , Cl. 35.0
4.2.5.6	Core design features	i) Magnetic circuit designed to avoid short circuit paths within core or to the earthed clamping structure ii) Magnetic circuit shall not produce flux components at right angles to the plane of lamination to avoid local heating iii) Least possible air gap and rigid clamping for minimum core loss and noise generation iv) Adequately braced to withstand bolted faults on secondary terminals without mechanical damage and damage / dis-placement during transportation and positioning v) Percentage harmonic potential with the maximum flux density under any condition limited to avoid capacitor overloading in the system vi) All steel sections used for supporting the core shall be thoroughly sand blasted after cutting, drilling, welding vii) Provision of lifting lugs for core coil assembly viii) Supporting framework designed not to obstruct complete drainage of oil from transformer ix) The insulation of core to bolts and core to clamps plates shall be able to withstand a voltage of 2 kV rms for one minute, however boltless construction shall be preferred to avoid generation of hot spots and decomposition of oil as well as to reduce noise level.
4.2.6	Winding	
4.2.6.1	Material	Electrolytic Copper
4.2.6.2	Maximum current density allowed	3 A/mm^2
4.2.6.3	Winding Insulating material	Class A, non catalytic, inert to transformer oil, free from compounds liable to ooze out, shrink or collapse. • The insulation should comply the latest IS/IEC standards. The insulation details like the type, thermal class, and properties (e.g., dielectric strength, moisture resistance, thermal stability etc.) to be furnished. • Manufacturers (OEMs) should provide test reports verifying compliance with

		the specified insulation standards, including parameters like aging performance, mechanical strength, and compatibility with transformer oil.
4.2.6.4	Winding Insulation	Uniform
4.2.6.5	Design features	i) Stacks of winding to receive adequate shrinkage treatment before final assembly ii) Connection braced to withstand shock during transport, switching, short circuit, or other transients. iii) Minimum out of balance force in the transformer winding at all voltage ratios. iv) Conductor width on edge exceeding six times its thickness v) Transposed at sufficient intervals. vi) Threaded connection with locking facility vii) Winding leads rigidly supported, using guide tubes if practicable viii) Winding structure and major insulation not to obstruct free flow of oil through ducts ix) Provision of taps as indicated in the technical particulars
4.2.6.6	Essential provision for core coil assembly	i) Core coil assembly shall be mounted on bottom of the tank. ii) Earthing of core clamping structure and earthing of magnetic circuit shall be in line with CBIP reference manuals.
4.2.7	Transformer Oil	Should be in accordance with specification as per Annex D of this document.
4.2.8	Bushings and terminations	
4.2.8.1	Type below 52 kV	Oil communicating , outdoor, removable
4.2.8.2	Type 52kv and above	Oil filled porcelain condenser & non oil communicating type with oil level gauge, oil filling plug and drain valve if not hermetically sealed, tap for capacitance and loss factor measurement, removable without disturbing bushing CT'S.
4.2.8.3	Arcing horns.	Not required.
4.2.8.4	Termination on HV side bushing	By bimetallic connectors suitable for ACSR/AAAC conductor, cable connection through cable box with disconnecting link as per annexure A Scope of Supply.
4.2.8.5	Termination on LV side bushing	Cable connection through cable box with disconnecting link as per annexure A, scope supply.
4.2.8.6	Minimum creepage distance of bushing	As per annexure C cl 38.0
4.2.8.7	Protected creepage distance	At least 50 % of total creepage distance
4.2.8.8	Continuous current rating	Minimum 20 % higher than the current corresponding to the minimum tap of the

		transformer.
4.2.8.9	Rated thermal short time current	As per annexure C Cl 38.0
4.2.8.10	Atmospheric protection for clamp and fitting of iron and steel.	Hot dip galvanizing as per IS 2633
4.2.8.11	Bushing terminal lugs in oil and air.	Tinner copper.
4.2.8.12	Sealing washers /gasket ring.	Nitrile rubber/ Expanded TEFLON(PTFE) as applicable
4.2.9	HV, LV, LV Neutral cable box	Required.
4.2.9.1.1	Material of construction	Sheet steel min 4.0 mm thick. Inspection covers shall be min 3mm thick.
4.2.9.1.2	Cable box doors (33kV and 11kV Cable boxes)	The doors should be internal anti theft hinge with minimum opening angle of 120º, minimum 3 nos. with lockable handle & with padlocking facility
4.2.9.2	Cable entry	At bottom through detachable gland plate with cable clamps of non magnetic material
4.2.9..3	Cable size for HV	As pe annexure C Cl 15.1
4.2.9.4	Cable size for LV	As per Annexure C Cl 15.2
4.2.9.5	LV Neutral connection	As per Annexure C Cl 15.3
4.2.9.6	Detachable gland plate material for HV, LV, LV Neutral box	As per GTP
4.2.9.7	Gland plate thickness for HV, LV, LV Neutral box	As per GTP
4.2.9.8	Cable gland for HV, LV, LV Neutral cables	As per GTP
4.2.9.9	Cable lug for HV& LV cables	As per CL 4.9 of this spec and suitable for cable size as per GTP
4.2.9.10	Essential parts	i) Disconnecting chamber ii) Flexible disconnecting link of tinned copper iii) Tinned copper busbar for Owner's cable termination with busbar supports iv) Detachable gland plate as per Schedule A GTP Cl. 24.4, 24.5, 25.4, 25.5, 26.4, 26.5 v) Earthing boss for the cable box vi) Earthing link for the gasketted joints at two points for each joint vii) Earthing provision for cable armour / screen viii) Flange type Inspection cover with handle for Inspecting bushing and busbars on top as well as on front cover ix) Anti theft hinged type door with lockable handle & with padlocking facility for cable box. x) Drain plug xi) Rainhood on gasketted vertical joint

		xii) Danger plate made of Anodized aluminum with white letters on red background on HV and LV side fixed by rivets. xiii) Phase marking plate inside cable box near termination as well as on front cover of cable box made of anodized aluminum with black letters on satin silver background on HV and LV side fixed by rivets xiv) Support insulators for the busbars shall be epoxy resin cast type. xv) Space heaters for HV and LV cable box controlled by thermostat
4.2.9.11	Terminal Clearances	As per Annexure C technical particulars
4.2.9.12	Termination height required for cable termination	Minimum 1000 mm
4.2.9.13	Essential provision for LV neutral cable box	i) Neutral shall be outdoor type bushing OR with cable box. Box shall have adequately sized inspection cover suitable for inspection of bushings / replacement / maintenance of neutral CT. For Outdoor Bushing the NCT shall be mounted in IP55 box. ii) Knife switch with locking arrangement to be provided to disconnect the neutral from grounding. Connection from Neutral bushing to the knife switch shall be with 100x12mm Tinned copper bus bar. Bus Bar shall brought down to the bottom of the transformer supported by suitable support insulator made of epoxy resin cast (insulator shall be suitable for outdoor application suitable for connecting. iii) Knife switch shall be suitable for connecting 2 runs of 75 x 10 mm size GS strip. iv) Height of knife switch shall be at maximum 1500 mm. Housing of Knife switch shall be suitable for easy & quick operations.
4.2.10	Current Transformers	
4.2.10.1	WTI CT	As per GTP
4.2.10.1.1	Rating	As per GTP
4.2.10.1.2	Mounting	In the turret of the bushing
4.2.10.1.3	Essential provision	i) CT mounting shall be such that CT can be replaced without removing tank cover ii) CT secondaries shall be wired up to TB with TB spec. as per Cl. 4.7of this specification
4.2.10.2	Neutral CT	
4.2.10.2.1	Type	Cast resin
4.2.10.2.2	Rating	As per GTP
4.2.10.2.3	Location of NCT	Separate box with TB arrangement for

		secondary Bushing type not acceptable.
4.2.10.2.4	Essential provision	i) CT mounting shall be such that CT can be replaced without removing the neutral cable box. ii) CT secondary shall be wired upto TB
4.2.10.2.5	Size of NCT Box	Overall size of NCT box shall not exceed 1200x600x1000 mm including canopy on top.
4.2.11	Marshalling Box Cubicle	
4.2.11.1	Material of construction	Construction of Marshalling Box should be stainless steel 304 grade (Min) with powder coating of specified color shed
4.2.11.2	Door hinges of marshalling box should be from inner side and should not be exposed to rain.	Required
4.2.11.3	Major equipments in Marshalling box	i) Mechanical gauge for HV and LV WTI ii) Mechanical gauge for OTI iii) Power supply unit (PSU) for remote monitoring of OTI and WTI temperatures. PSU suitable for 48V-265V AC/DC supply. iv) Make of OTI and WTI is Precimeasure 1005AH/1007H model with PSU v) Electronic OTI/WTI Scanner vi) Capillaries for WTI and OTI min 15M length vii) Control & Protection Equipment for Fan Control viii) DC contactors to be provided for all trouble free signals. Same to be wired up to the TB ix) Other panel accessories listed elsewhere
4.2.11.4	Gland plate	i) Min. 3 mm thick detachable with knockout 6 x 1 inch ii) Gland plate mounting should be from inside only
4.2.11.5	Contacts wired to terminal block	i) WTI alarm and trip ii) OTI alarm and trip iii) Buchholz relay alarm and trip iv) OSR trip contacts v) MOG low level alarm vi) MOG on OLTC low level alarm vii) PRV main tank trip viii) PRV OLTC trip ix) Sudden pressure relay trip x) WTI and OTI PSU/ relay contacts of the temperature scanner. xi) Note: 2NO +2NC auxiliary contacts for all the above to be provided for customer use (By using auxiliary relay)
4.2.11.6	Signals to be wired to terminal block	i) WTI CT ii) NCT iii) Capillaries for WTI and OTI

		iv) 4 to 20 mA signals for WTI and OTI repeater located elsewhere
4.2.11.7	Ingress protection	IP 55 plus additional rain canopy to be provided
4.2.11.8	Welding	Continuous welding on joints, welding at regular intervals on joints and filling of gaps with use of M seal not accepted
4.2.11.9	Cable entry	Bottom for all cables
4.2.11.10	Panel internal Access	Front only through front door double leaf with antitheft hinges
4.2.11.11	Pane back access	None
4.2.11.12	Mounting of marshalling box	Separately mounted as per GTP
4.2.11.13	Panel supply	415 V AC, Three phase, 50 Hz
4.2.11.14	Panel accessories	i) Cubicle lamp with door switch and separate fuse / MCB ii) Approved space heaters controlled by thermostat and separate fuse / MCB iii) Incoming fuse switch / MCB for the incoming supply iv) Panel wiring diagram fixed on back of panel door on Aluminum plate engraved fixed by rivet v) Stainless steel door handle with lock & additional facility for padlock vi) Earthing boss for the marshaling box vii) Single phase power plug industrial type 15/5 Amp. With MCB viii) Single phase preventer
4.2.11.15	Painting of marshalling box	As per Cl. 4.10 of the specification
4.2.11.16	Hardware, Gasket, Cables and Wires, Terminal blocks, Cable gland, Cable lugs of marshalling box	As per Cl. 4.3, 4.4, 4.6, 4.7, 4.8, 4.9 of the specification respectively.
4.2.11.17	Fan motors control installed in marshalling box or separate fan control cubicle	i) 2 x 50% fans ii) Complete fan control with fuse switch, contactor, Bimetallic relay, in starter circuit with type 2 coordinated rating as per IS iii) Automatic control from WTI contact iv) Provision for manual control both from local/ remote. v) Fan Control Cubicle should be separately mounted. vi) 2RC/2RS type bearings shall be used instead of ball bearings. vii) Fan enclosure shall be perforated sheet with holes at motor side with ground support.
4.2.11.18	Control Cable Length	All the control Cable shall have minimum 15 Meters of length for all control cable, OTI, WTI Capillaries and NIPFPS control cables also.
4.3	Hardware	

4.3.1	External	M12 size & below Stainless Steel & above M12 Hot Dip galvanized steel.
4.3.2	Internal	Cadmium plated except special hardware for frame parts and core assembly as per manufacturer's design
4.3.3	Provision of fully enclosed Aluminium hoods/Canopy for following accessories of power transformer for protection against water ingress.	All Oil Surge Relays, Buchholz Relay, Pressure release Valve.
4.4	Gasket	
4.4.1	For transformer, OLTC chamber, PT chamber, surfaces interfacing with oil like inspection cover etc.	Nitrile rubber based
4.4.2	For cable boxes, marshalling box, OLTC drive mechanism etc.	Neoprene rubber based
4.4.3	Tank top cover gasket	It shall be double O ring type sealing arrangement seating over a double groove made in transformer tank & top cover.
4.5	Valves	
4.5.1	Material of construction	Gun metal/Brass
4.5.2	Type	Both end flanged gate valve / butterfly valve depending on application
4.5.3	Size	As per manufacture's standard
4.5.4	Essential provision	Position indicator, locking rod, padlocking facility, valve guard, cover plate.
4.6	Cable routing on Transformer	Control cable for accessories on transformer tank to marshalling box and WTI, OTI Capillaries shall be routed through perforated Covered GI trays
4.6.1	Control cable specification	i) PVC insulated, extruded PVC inner sheathed, armoured, extruded PVC outer sheathed 1100V grade control cable as per latest edition of IS 1554 Part 1 ii) Minimum 2.5 sqmm for signals and 4 sqmm for CT with multistrand copper conductor
4.6.2	Specification of wires to be used inside marshalling box, OLTC drive mechanism.	PVC insulated multi strand flexible copper wires of minimum 2.5 sqmm size, 1100 V grade as per latest edition of relevant IS
4.6.3	Essential provision for Capillary routing from transformer to marshalling box	Routing shall be done in such a way that adequate protection is available from mechanical and fire damage.
4.7	Terminal Blocks to be used by the vendor	Nylon 66 material, minimum 6 sqmm stud type screw driver operated for control wiring and potential circuit. Terminal blocks to be located in such a way to achieve the termination height as min 250 mm from grand plate.
4.7.1	Essential provision for CT	Sliding link type disconnecting terminal block

	terminals	screwdriver operated stud type with facility for CT terminal shorting material of housing melamine/Nylon66
4.8	Cable glands to used by the vendor	Nickel plated brass double compression weatherproof cable gland
4.9	Cable lugs to be used by the vendor	
4.9.1	For power cables	Long barrel medium duty bi-mettalic lug with knurling on inside surface
4.9.2	For control cable	Tinned copper pre insulated Pin Ring, Fork type as applicable. For CT connection ring type lug shall be used.
4.10	Painting of transformer, conservator, OLTC, Radiator, cable boxes marshalling box.	
4.10.1	Surface preparation	By 7 tank pretreatment process or shot blasting method
4.10.2	Finish on internal surfaces of the transformer interfacing with oil	Bright Yellow heat resistance and oil resistant paint two coats. Paint shall neither react nor dissolve in hot transformer insulating oil.
4.10.3	Frame parts	Bright Yellow heat resistance and oil resistant paint two coats. Paint shall neither react nor dissolve in hot transformer insulating oil.
4.10.4	Finish on inner surface of the marshalling box	White Polyurethane paint anti condensation type two costs, minimum dry film thickness 80 microns
4.10.5	Finish on outer surface of the transformer, conservator, radiator, cable boxes, marshalling box	Smoke Grey (IS shade 692) polyurethane paint two coats, minimum dry film thickness 80 micros

5.0 MINIMUM PROTECTIVE DEVICES ON TRANSFORMER

5.1	Spring loaded with detachable diaphragm type pressure relief valve with two trip contacts for the main tank of LSM model with limit switch design IP 65 with additional rain hood. PRV Oil discharge pipe arrangement	Required
5.2	Spring loaded with detachable diaphragm type pressure relief valve with two trip contacts for OLTC of LSM model with limit switch design IP 65 with additional rain hood. Oil discharge pipe arrangement	Required
5.3	Double float bucchholz relay with alarm and trip contacts, service and test position, with test cock for the	Reed Switch Type shall be required

	main tank, terminal box shall be IP 65 with drain plug for rainwater draining. Additional rain hood shall be provided.	
5.4	Oil surge relay with two contacts, services and test position, with test cock for OLTC tank, terminal box shall be IP 65 with drain plug for rainwater draining. Additional rain hood shall be provided.	Required
5.5	Sudden pressure relay with trip contact for the main tank	Required
5.6	Oil temperature indicator metallic bulb type 150 mm diameter with maximum reading pointer, potential free independent adjustable alarm and trip contacts, resetting device with temperature sensing element	Required
5.7	Winding temperature indicator 150 mm diameter with maximum reading pointer, two sets of potential free independent adjustable alarm and trip contacts, resetting device with temperature sensing element, thermal image coil	Required
5.8	2 No's PT 100 sensors/RTDs for winding temperature indication wired upto TB's in marshalling box for external connection.	Required
5.9	Magnetic switching for all the protective devices including Buchholz (alarm and Trip) OSR,SPR,WTI and OTI. Mercury switching is not acceptable	Required

6.0 FITTINGS AND ACCESSORIES ON TRANSFORMER

6.1	Rating and diagram plate	Required
6.1.1	Material	Anodized aluminum 16SWG
6.1.2	Background	SATIN SILVER
6.1.3	Letters, diagram & boder	Black
6.1.4	Process	Etching
6.1.5	Name plate details	Following details shall be provided on rating and diagram plate as a minimum i) Type / kind of transformer with winding material ii) Standard to which it is manufactured iii) Manufacture's name iv) Transformer serial number

		v) Month and year manufacture vi) Rated frequency in Hz vii) Rated voltages in kV viii) Number of phases ix) Rated power in kVA x) Type of cooling (ONAN) xi) Rated currents in A xii) Vector group symbol xiii) 1.2/50µs wave impulse voltage withstand level in kV xiv) Power frequency withstand voltage in kV xv) Impedance voltage at rated current and frequency in percentage at principal, minimum and maximum tap xvi) Load loss at rated current xvii) No load loss at rated voltage and frequency xviii) Auxiliary loss xix) Continuous ambient temperature at which ratings apply in □ C xx) Top oil and winding temperature rise at rated load in deg C xxi) Temperature gradient of HV and LV winding xxii) Winding connection diagram xxiii) Weight of radiator xxiv) Volume and weight of oil in radiator xxv) Transport weight of transformer xxvi) Weight of core and frame xxvii) Weight of winding xxviii) Weight of core and winding xxix) Weight of tank and fittings xxx) Total weight xxxi) Volume of oil xxxii) Weight of oil xxxiii) NCT, WCT, details xxxiv) Type of OLTC xxxv) Tapping details xxxvi) Name of the purchaser xxxvii) PO no and date xxxviii) Guarantee period
6.2	Instruction plate for OLTC anodized aluminum black lettering on satin silver background fixed by rivet	Required
6.3	Oil filling instruction plate anodized aluminum black lettering on satin silver background fixed by rivet	Required

6.4	Valve schedule plate anodized aluminum black lettering on satin silver background fixed by rivet	Required
6.5	Instruction plate anodized aluminum black lettering on satin silver background for flexible air cell for oil conservator	Required
6.6	Terminal marking plate for bushing WTI, OTI & RTD anodized aluminum black lettering on satin silver background fixed by rivet	Required
6.7	Company monogram plate	Required
6.8	Lifting lugs / bollards with antiskid head to lift complete transformer with oil	Required
6.9	Lashing lug	Required
6.10	Jacking pad with Haulage hole to raise or lower complete transformer with oil	Required
6.10.1	Essential provision for jacking pads. Designed in such a way that jacking of complete transformer with oil shall be possible with 3 nos jacking pads out of 4 nos jacking pads provided as minimum	Required
6.11	Detachable bi-directional roller assembly with corrosion resistant bearing, fitting / nipple for lubrication or with permanently lubricated bearing, anti earthquake locking device. The wheels shall be capable of swiveling when transformer is lifted with provision for locking the swivel movement. Roller shall be suitable for 90 lb rail. Suitable anti rolling clamp for 90 lb rail minimum 4 nos. shall be provided	Required
6.12	Pockets for OTI, WTI, & RTD on tank	Required (with one spare pocket for future use)
6.13	Pockets for ordinary thermometer on tank cover, top and bottom header of radiator, top of each radiator	Required
6.14	Ordinary thermometer 4 nos.	Required
6..15	Drain valve (gate valve) for the main tank, 80 mm	Required
6.16	Drain valve (gate valve) for OLTC, 50 mm	Required
6.17	Drain valve (gate valve) for all headers, 50 mm	Required

6.18	Filter valve (gate valve) at top and bottom of the main tank, 50 mm	Required
6.19	Sampling valve (gate valve) at top and bottom of the main tank, 15 mm	Required
6.20	Vacuum breaking valve (gate valve), 25 mm	Required
6.21	Drain plug on tank base	Required
6.22	Air release plug on various fitting and accessories	Required
6.23	Earthing pad on tank for transformer earthing complete with non ferrous nut, bolt, washers, spring washers etc.	Required
6.24	Vacuum pulling pipe with blanking plate on main conservator pipe work	Required
6.25	Rainhood (canopy) for Buccholz relay, PRV on main transformer and OLTC, OSR relay of OLTC	Required
6.26	Rainhood for vertical gasketted joints, in cable boxes	Required
6.27	Oil level gauge on tank for transformer shipment	Required
6.28	Earthing bridge by copper strip jumpers on all gasketted joints at least two points for electrical continuity	Required
6.29	Aluminum ladder with anti climbing device and safety flap, with lockable hinged plate for at least 1.5 m from ground level. Ladder shall be located in such a way that it avoids any hindrance to operation of nearby electrical/mechanical accessories etc.	Required
6.30	OLTC panel as specified	Required
6.31	Skid base welded type	Required
6.32	Core, frame to tank earthing	Required
6.33	Danger plate made of anodized aluminum white lettering on red background fixed by rivet	Required
6.34	Identification plate for all accessories, protective devices, instruments, thermometer / RTD pockets, earthing terminals, all inspection covers, cable boxes, marshalling boxes etc. made of anodized aluminum black lettering on silver background fixed by rivet	Required
6.35	Provision for Valves and NRV for	Required

	mounting of Nitrogen fire protection System	
6.36	Separate structure for mounting of cooling fans	Required
6.37	Terminal box of contacts from, Core and Yoke with shorting link at top cover of Transformer	Required. The IR test will be performed on these terminals on trailer prior to unloading at site.
6.38	Aluminum ladder on transformer top cover to conservator top	Required
6.39	Space heaters with thermostat control in HV and LV cable box	Required

7.0 OLTC

7.1	Requirement	i) For 33kV – CTR make EQ16 or equivalent. ii) For 66kV – CTR make FQ 16 or equivalent No in-tank OLTC acceptable.
7.2	OLTC gear location	Side mounted on conservator side not in front of HV bushing
7.3	Type of OLTC gear	i) The tapings shall be controlled by a high speed resistor transition type gear in which tap change is carried out virtually under 'no volt' 'no ampere' condition and the selector switches do not make and break any current, main current is never interrupted and a resistor is provided to limit the arching at diverter contacts to a minimum suitable for outdoor mounting and continuously rated for operating at all position including positions in the middle of tap change. In particulars, the tap change gear shall be suitable when delivering the full output plus permissible overload and operating the lowest voltage tap on the HV side. ii) The value of the transition resistor shall be indicated on the rating plate of the OLTC with continuous current rating with reference to design ambient temperature specified.
7.4	Tappings	As per Cl. 34 of Annexure C
7.5	Operation of OLTC gear	Selection of local / remote operation by selector switch on OLTC drive mechanism
7.5.1	local operation	From OLTC drive mechanism through pistol grip rotary switch as well as emergency mechanical hand operation.
7.5.2	Remote operation	From digital RTCC provided by customer /SCADA depending on the selection of control on digital RTCC panel.
7.6	Safety interlocks in OLTC	Following safety interlock to be provided in

		OLTC as minimum i) Positive completion of tap changing step once initiated ii) Blocking of reverse tap change command during a forward tap change already in progress until the mechanism resets and vice – versa iii) Cutting of electrical circuits during mechanical operation iv) Mechanical stops to prevent overrunning of the mechanism at the end taps v) Interlock to avoid continuous tap change which will cut off motor supply in such events vi) Raise / lower command in OLTC and Digital relay shall be positively interlocked
7.7	Feature of OLTC	i) OLTC mechanism and associated controls shall be housed in an outdoor, IP 55, weatherproof, vermin proof and dust proof cabinet ii) It shall be ensured that oil in compartments containing contacts making and breaking current compartments containing contacts not making and breaking current and main transformer tank does not mix iii) The hand cranking arrangement shall be such that it can be operated at standing height from ground level iv) Mechanical indicator to indicate completion of tap change operation shall be provided with suitable (Green & Red) colour code to confirm correct method of completion of tap change operation v) Contractors shall be placed in the OLTC driving mechanism in such a way that the name-plate shall be visible on opening of door. vi) Protective cover shall be provided for raise and lower push buttons, external ON-OFF switch, which are mounted on OLTC driving mechanism door. This is required to prevent unauthorized person operating these buttons. vii) It shall be possible to remove the top cover of the OLTC tank without difficulty. The OLTC conservator, piping & oil surge relay shall be placed accordingly. viii) The tap change equipment shall be so designed that if the mechanism is struck in an intermediate position, the transformer shall be capable of delivering full load

		without any damage. ix) Limit switches may be connected in the control circuit of the operating motor provided that a mechanical de-clutching mechanism is incorporated. Otherwise it shall be directly connected to the operating motor circuit and mechanical stop. x) Thermal devices or other means shall be provided to protect the motor and control circuits xi) The tap changer shall be capable of permitting parallel operation with other transformer for which necessary wiring and accessories, if any, shall be provided xii) The control scheme for the tap changer shall be provided for independent control of the tap changers when the transformers are in Independent service. In addition provision shall be made to enable parallel operation control also at times so that the tap changer will be operated simultaneously when oneunit is in parallel with another it will not become out of step and this will eliminate circulating current. Additional features like master /follower and visual indication during the operation of motor shall also be incorporated. xiii) OLTC shall be suitable for bi- directional power flow in transformer xiv) Mechanical indicator and operation counter shall be visible through glass window OLTC drive mechanism door xv) External ON /OFF switch in addition to door switch xvi) All mcb shall be located in such a way that they are easily replaceable. xvii) Motor protection relay shall be provided with single phasing prevent for both current and voltage unbalance. xviii) All accessories inside drive mechanism shall be provided with metallic label, no sticker permitted.
7.8	Essential BOM for OLTC drive mechanism (indicative only, bidder to provide all necessary components to complete the function of the OLTC)	i) Control circuit transformer 415/55-0-55 V, adequate capacity ii) Local remote selector switch 1 pole, 2 way, 6A, pistol grip iii) Retaining switch raise / lower iv) Handle interlock switch v) Raise / lower switch 1 pole, 2way, 6A, pistol grip vi) Lower limit switch

		vii) Raise limit switch viii) Tap changer motor, 415 V AC, 3 phase, adequate rating ix) Motor protection relay with single phasing preventor x) Motor control contactors raise / lower xi) Stepping relay xii) Out of step switch xiii) Tap position indicator xiv) Operation counter xv) Emergency stop push button xvi) Tap change incomplete scheme with timer xvii) Required indication lamp
7.9	Essential provision of accessories on OLTC	i) Pressure relief valve ii) Oil surge relay
7.10	Drive mechanism accessories	i) Cubical lamp with door switch and separate fuse / MCB with external ON /OFF switch on front cover of OLTC drive mechanism ii) Approved space heaters controlled by thermostat and separate fuse / MCB iii) Incoming fuse switch / MCB for the incoming supply iv) Panel wiring diagram fixed on back of panel door aluminium engraved fixed by rivet v) Nylon 66 terminal block min 4 sqmm screw type, with 10% spare terminals vi) Stainless steel door handle with lock & additional facility for padlock vii) Earthing boss
7.11	Hardware, Gasket, Cables and Wires, Terminal blocks, Cable gland, Cable lugs of OLTC drive mechanism	As per Cl. 4.3, 4.4, 4.6, 4.7, 4.8, 4.9 of the specification respectively.
7.12	OLTC and drive mechanism painting	As per Cl. 4.10 of the specification
7.13	RTCC panel	Not in the scope of supply.

8.0 APPROVED MAKE OF COMPONENTS

8.1	CRGO	Nippon/JFE/Posco
8.2	Copper	Birla copper/Sterlite
8.3	Pre compressed Pressboard	Raman Board, Mysore/ Senapathy Whiteley
8.4	Laminated Wood	Permalli Wallance / Rochling Engineers
8.5	Oil	Apar/Savita/Raj
8.6	Condensor Bushings (OIP)	CGL/BHEL/ABB/ALSTOM
8.7	Porcelain Bushing	CJI/Jayshree Insulators/BHEL

8.8	Steel	TATA/Jindal/SAIL
8.9	Lugs/Glands	Jainson/Dowells/Comet
8.10	Radiators	CTR/Hi-Tech Radiators/Tarang Engineers
8.11	Fans	Marathon / Khaitan
8.12	Magnetic Oil Level Indicator	Sukrut /Yogna
8.13	Pressure relief valve	Sukrut / Qualitrol
8.14	Bucchholz Relay	Proyog / ATVUS
8.15	Oil surge Relay	Proyog / ATVUS
8.16	Winding Temperature Indicator	Precimeasure / Perfect Controls / Pradeep sales
8.17	Oil Temperature Indicator	Precimeasure / / Perfect Controls/ Pradeep Sales
8.18	Sudden Pressure Relay	Sukrut / Qualitrol/ATVUS
8.19	Aircell	Sukrut(Unirub)/Pronol / Rubber Product
8.20	Neutral CT	Pragati /ECS / KAPPA/ Reputed equivalent
8..21	WCT	Pragati / ECS / KAPPA/ Reputed equivalent
8.22	Switch	L&T (Salzer) / Siemens
8.23	HRC Fuse Links	Siemens / L&T/GE
8.24	Fuse base	Siemens / L&T/GE
8.25	AC Contactors & O/L Relay	L&T / Siemens / Schneider
8.26	Terminals	Connectwell / Elmex
8.27	Push buttons / Actuator	L&T / Siemens
8.28	Thermostat	Velco/Girish
8.29	Heater	Velco/Girish
8.30	Voltmeter Selector Switch	Siemens/ equivalent
8.31	Control selector switch	Siemens/ equivalent
8.32	Auxiliary Relays	Jyoti / Easun Rayrole
8.33	Timers	L&T /Siemens
8.34	Tap Position Indicator	Accord
8.35	Annunciator	Accord
8.36	Digital tap change counter	Selectron
8.37	LED cluster type indication lamp	MIMIC/ Siemens/ Binay

Note – Any other make of component to be approved by Owner

9.0 QUALITY ASSURANCE

9.1	Quality assurance	To be submitted before contract award. Program shall contain following i) The structure of the organization. ii) The duties and responsibilities assigned to staff ensuring quality of work. iii) The system for purchasing, taking delivery and verification of materials. iv) The system for ensuring quality of workmanship v) The system for control of documentation vi) The arrangements for the suppliers internal auditing vii) The system for retention of records. viii) A list of the administration and work procedures required to achieve and verify contracts quality requirements. These procedures shall be made readily available to the purchaser for inspection on request.
9.2	Quality plan	To be submitted by the successful bidder for approval. Plan shall contain following as a minimum i) An outline of the proposed work and programme sequence ii) The structure of the suppliers organization for the contract. iii) The duties and responsibilities assigned to staff ensuring quality of work for the contract. iv) Hold and notification points. v) Submission of engineering documents required by the specification. vi) The inspection of materials and components on receipt vii) Reference to the suppliers work procedures appropriate to each activity viii) Inspection during fabrication /construction. ix) Final inspection and test. x) Successful bidders shall include submittal of Mills invoice, Bill of lading, Mills test certificate for grade, physical tests, dimension, specific watt loss per KG for the core material to the purchaser for verification in the quality plan suitably.
9.3	Manufacturing environment	Bidder to ensure the following manufacturing areas should be maintain positive atmospheric pressure, clean, dust free (Clean room class ISO 9 or better as per ISO 14644-1) and humid controlled environment. i) Insulation storage ii) Core storage iii) Glue stacking area iv) core cutting line

		v) Winding manufacturing bay vi) Core building area vii) Core coil assembly area viii) Testing lab ix) Packing & dispatch area
9.4	Accessories environment	Bidder to ensure the following accessories to be kept in clean and coved location i) Piping ii) Radiators iii) Tank iv) Bushing (as per manufacturer's guideline) v) Marshalling box vi) Turret vii) Conservator viii) Insulating oil
9.5	Manufacturing Quality Assurance Plan	Refer Annexure G

10.0 PROGRESS REPORTING

10.1	Online document	To be submitted for purchaser approval for outline of production , inspection,testing,packing dispatch ,documentation programmed
10.2	Detailed progress report	To be submitted to the purchaser once a month containing i) Progress on material procurement ii) Progress on fabrication iii) Progress on assembly iv) Progress on internal stage inspection v) Reason for any delay in total programme. vi) Details of test failures if any in manufacturing stages. vii) Progress on final box up. viii) Constraints/ Forward path.

11.0 INSPECTION & TESTING

11.1	Inspection and Testing during manufacture	
11.1.1	Tank and conservator	i) Check correct dimension between wheels demonstrate turning of wheels through 90 deg and further dimensional check. ii) Check for physical properties of material for lifting lugs, jacking pads etc. all load bearing welds, including lifting lug welds shall be subjected to required load tests iii) Leakage test of the conservator as per CBIP iv) Certification of all test results v) Oil leakage test on all tanks at normal head of oil

		plus 35 kN / sqm at the base of the tank for 24 hrs vi) Vacuum and pressure test on tank as type test as per CBIP vii) Leakage test of radiators as per CBIP.
11.1.2	Core	The below mentioned core critical points should complied by the bidder
11.1.2.1	Mother Core coil	i) Core material shall be directly procured either from the BSES approved manufacturer or through their authorized service centre/distributor and not through any contractor. ii) Verification & inspection of the mother coil at port & putting stamp & seal may be inspected by BSES.
11.1.2.2	Core cutting	Bidder should have in house core cutting facility for proper monitoring & control on quality. In case it is done outside cutting shall be done in presence of BSES.
11.1.2.3	Hydraulic core lifting	Bidder should have hydraulic core lifting facility to avoid any jerk at the time of core building
11.1.2.4	Core sample type testing	Reconciliation of mother coil by checking stamp & seal at factory before slitting. One sample of CRGO to be sealed for testing at ERDA/CPRI. Following Tests shall be conducted on the sample per P.O. i) Specific core loss measurement ii) Magnetic polarization iii) Magnetic permeability iv) Specific core loss measurement after accelerated ageing test v) Surface insulation resistivity vi) Electrical resistivity measurement vii) Stacking factor viii) Ductility(Bend test) ix) Lamination thickness x) Magnetization characteristics (B-H curve)
11.1.2.5	Core physical verification	i) Check on the quality of varnish if used on the stampings. a) Measurement of thickness and hardness of varnish on stampings. b) Solvent resistance test to check that varnish does not react in hot oil. c) Check over all quality of varnish by sampling to ensure uniform hipping colour, no bare spots. No ever burnt varnish layer and no bubbles on varnished surface. ii) Check on the amount of burns. iii) Bow check on stampings.

		iv) Check for the overlapping of stampings. Corners of the sheet are to be apart. v) Visual and dimensional check during assembly stage. vi) Check on complete core for measurements of iron-loss and check for any hot spot by exciting the core so as to induce the designed value of flux density in the core. vii) Check for inter laminar insulation between core sectors before and after pressing. viii) Visual and dimensional checks for straightness and roundness of core, thickness of limbs and suitability of clamps. ix) High voltage test (2 KV for one minute) between core and clamps. x) Certification of all test results.
11.1.2.6	Documents verification	Following documents to be submitted during the stage inspection i) Invoice of supplier ii) Mills test certificates iii) Packing list iv) Bill of lading v) Bill of entry certificates by customs
11.1.3	Insulating material	i) Sample check for physical properties of material ii) Check for dielectric strength iii) Visual and dimensional checks iv) Check for the reaction of hot oil on insulating materials v) Certification of all test results
11.1.4	Windings	i) Sample check on winding conductor for mechanical properties and electrical conductivity ii) Visual and dimensional check on conductor for scratches, dept. mark etc. iii) Sample check on insulating paper for PE value, bursting strength, electric strength iv) Check for the reaction of hot oil on insulating paper v) Check for the binding of the insulating paper on conductor vi) Check and ensure that physical condition of all materials taken for winding is satisfactory and free of dust vii) Check for absence of short circuit between parallel strands viii) Check for Brazed joints wherever applicable ix) Ensure the quality and strength of brazed joints connecting the main winding with the tap changer x) Emphasize tests to evaluate joint strength, thermal

		performance, and reliability under electrical and mechanical stresses xi) Stage inspection of core coil assembly to check the integrity/quality of OLTC connections like joints etc. in power transformer main tank xii) Measurement of voltage ratio to be carried out when core / yoke is completely restocked and all connections are ready xiii) Certification of all test results
11.1.4.1	Checks before drying process	i) Check conditions of insulation on the conductor and between the windings ii) Check insulation distance between high voltage connection cables and earthed and other live parts iii) Check insulation distance between low voltage connection cables and earthed and other parts iv) Insulation test of core earthing v) Check for proper cleanliness vi) Check tightness of coils i.e. no free movements vii) Certification of all test results
11.1.4.2	Checks during drying process	i) Measurement and recording of temperature and drying time during vacuum treatment. ii) Check for completeness of drying iii) Certification of all test result.
11.1.5	Oil	i) As per IS 335 and annexure-D ii) One sample of oil drawn from every lot of transformer offered for inspection should be tested at CPRI/ERDA for tests as listed under table 1 of IS 1866(2000).The cost of this testing should be included within the cost of transformer. Test result shall be confirming to Annexure D of this specification
11.1.6	Test on fittings and accessories	As per manufacturer's standard
11.2	Routine tests/Acceptance tests	The sequence of routine testing shall be as follows i) Visual and dimension check for completely assembled transformer ii) Measurements of voltage ratio iii) Measurements of winding resistance at principal tap and two extreme taps. iv) Vector group and polarity test v) Measurements of insulation resistance and polarization index. vi) Separate source voltage withstand test. vii) Measurements of iron losses and exciting current at rated frequency and 90%, 100% and 110% rated voltage. viii) Induced voltage withstand test. ix) Load losses measurement. x) Impedance measurement at principal tap (HV and LV) of the transformer.

		xi) Routine test of tanks xii) Induced voltage withstand test (to be Repeated if type tests are conducted). xiii) Measurement of iron loss (to be repeated if type tests are conducted). xiv) Measurement of capacitance and Tan Delta for for transformer winding and HV bushing (including bushing C1 and C2 Values) and Tan Delta for transformer oil (for all transformers). xv) Phase relation test, polarity, angular displacement and phase sequence. xvi) Ratio of HV WTI CT, LV WTI CT and neutral CT xvii) Excitation and knee point voltage test on class PS core of neutral CT. xviii) Routine test on on–load tap changer. xix) IR test from terminals mentioned in Clause no 6.37 xx) Oil leakage test on assembled transformer xxi) Magnetic balance test xxii) Power frequency voltage withstand test on all auxiliary circuits xxiii) Temperature rise test. xxiv) Certification of all test result xxv) SFRA xxvi) Aircell charging and discharging test a) Insulation resistance measurement shall be carried out at 5 kV. Value of IR should not be less than 2000M ohms. Polarization index (PI = IR10min/IR1min) should not be less than 1.5 (if one minute IR value is above 5000Mohms and it is not be possible to obtain an accurate 10 minutes reading, in such cases polarization index can be disregarded as a measure of winding condition.) b) Temperature rise test may be necessary to be carried out on 100% of the order quantity at the manufacturer's works or third party lab. c) BSES may appoint recognized testing authority like CPRI /ERDA with their instruments & engineer's team and measure no load loss, load loss and percentage impedance of the transformer at supplier's works at Vendor cost . Bidder shall agree and give them full co-operation during their stay & testing at shop floor. The losses & impedance values so obtained will be considered as final.
11.3	Type tests	On one transformer of each rating and type (In Govt. recognized independent test laboratory / Internationally accredited test lab or at manufacturer's facility if it is approved by component authority.

		i) Impulse withstand test on all three HV and LV limbs of the transformers for chopped wave as per standard ii) Temperature rise test as per IS iii) Dissolved gas analysis before and after Temperature Rise test to be carried out from CPRI/ERDA iv) Pressure relief device test v) Pressure and Vacuum test on tank(stage inspection)
11.4	Special tests	On one transformer of each rating and type i) Dynamic & Thermal short circuit test short circuit test as per IS ii) Measure of zero seq. impedance (Cl.16.10 IS 2026 part-1) iii) 3) measurement of acoustic noise level (Cl.16.12 IS 2026 part-1) iv) Measurement of harmonic level on no load current v) High voltage withstand test shall be performed on the auxiliary equipment and wiring after complete assembly. vi) CRGO testing for specific core loss, accelerated ageing test, surface insulation resistivity, AC permeability and magnetization, stacking factor, ductility etc vii) Oil testing to be tested at CPRI/ERDA labs, whose samples shall be selected & sealed by customer. Cost of such tests, if extra, shall be quoted separately by the bidder.
11.5	In house NABL accreditation	i) Bidder should have in-house NABL accredited testing facility. ii) NABL accreditation certificate to be submitted.
11.6	Note for special tests and type test	Cost of the above tests, if extra, shall be quoted separately by the bidder which shall be considered in the price evaluation.
11.7	Notification to bidders	The product offered must be of type tested design with valid type test report of not more than 5 years. In case the product offered is never type tested for tests as per above list, type tests to be conducted by bidder at his own cost at Govt. recognized independent test laboratory / Internationally accredited test lab or at manufacturer's facility if it is approved by component authority. Valid type test reports for dynamic short circuit test as per IS may be forwarded for customer's review and approval. In case the product offered is never tested for dynamic short circuit the same to be conducted by bidder at his

		own cost at Govt. recognized independent test laboratory/internationally accredited test lab.
11.7	Site Acceptance test	Following tests shall be conducted at BYPL site/store in presence of BYPL official. i) Insulation Resistance from terminal box mentioned in clause no 6.37. The test shall be conducted on following basis: a) The IR test will be performed on the terminals mentioned in clause no 6.37 on trailer prior to unloading at site. b) The results shall be compared with the results obtained during inspection. c) The IR value in any of the tests (Factory as well as site) should not be less than 2000M Ohm d) To access internal physical damage during transportation, Transformer will not be received if the site results are less than 2000MOhm. ii) SFRA with same kit done at factory (Instrument shall be in Vendors scope iii) Magnetic Balance test iv) Measurement of Voltage ratio v) Measurement of capacitance and Tan Delta for transformer winding and HV bushing (for all vi) transformers). vii) Vector Group and Polarity viii) Physical checks ix) Oil BDV Note: Testing instruments shall be in scope of Vendor.

12.0 PACKING, SHIPPING, HANDLING AND STORAGE

12.1	Packing	
12.1.1	Packing protection	Against corrosion, dampness, heavy rains, breakage and vibration.
12.1.2	Packing for accessories and spares	Robust wooden non returnable packing case with all the above protection
12.1.3	Packing details	On each packing case details required as follows i) Individual serial number: ii) Purchaser's name: iii) PO Number: iv) Destination: v) Suppliers name: vi) Name and address of suppliers agent vii) Description and numbers of contents: viii) Manufacturers name: ix) Country of origin;: x) Case measurements: xi) Gross and net weights in kilograms

		xii) All necessary slinging and stacking instructions.
12.2	Shipping	The bidder shall ascertain at an early date and definitely before the commencement of manufacture, any transport limitations such as weights, dimensions, roads culverts, overhead lines, free access etc. from the manufacturing plant to project site :and furnish to the purchaser confirmation that the proposed packages can be safely transported, as normal or oversize packages up to the plant site. Any modifications required in the infrastructure and cost thereof in this connection shall be brought to the notice of the purchaser.
12.3	Handling and storage	As per manufacturers instruction.

13.0 COMMISIONING SUPPORT

13.1	Commissioning support	Supervision of Erection and Commissioning inclusive of all testing equipments/instruments shall be included for minimum 3 days for each Transformer. It includes following: i) BSES will give vendor 7 days advance notice prior to erection testing and commissioning of Transformer. ii) After successful erection testing and commissioning of Transformer Vendor shall issue erection quality check certificate to BSES.

14.0 TRAINING

14.1	Training at factory and at site after installation	Training on installation, commissioning, operation and maintenance shall be included in the proposal.

15.0 DEVIATIONS

15.1	Deviation	Deviations from this Specification shall be stated in writing with the tender by reference to the Specification clause/GTP/Drawing and a description of the alternative offer. In absence of such a statement, it will be assumed that the bidder complies fully with this specification. No deviation will be acceptable post order.

16.0 DRAWINGS AND DOCUMENTS

Drawing submission shall be as per the matrix given below. All documents/ drawing shall be provided on A3/A4 sheet in box file with separators for each section. PDF shall also be provided of all documents via USB. Deviation sheet and GTP shall be provided in excel

sheet.Language of the documents shall be English only. Deficient/ improper document/ drawing submission may liable for rejection.

S.no	Documents to be submitted	With the bid	After Award	
			For Approval	Prior to dispatch
1	Copy of specification along with company seal & signature on each page.	✓	✓	
2	Guaranteed technical particulars	✓	✓	
3	Outline dimension drawing for each major component, general arrangement drawing showing component layout an general schematic diagrams.	✓	✓	
4	Type test certificates, where available, and sample routine test reports	✓	✓	
5	Detailed reference list of customers already using equipment offered during the last 5 years with particular emphasis on units of similar design and rating	✓		
6	Details of manufacturers quality assurance standard and programmed and ISO 9000 series or equivalent national certification.	✓		
7	Deviations from this specification. Only deviations approved in writing before award of contract shall be accepted.	✓		
8	Recommended spare parts and consumable items for the five years of operation with prices and spare parts catalogue with price list for future requirements.	✓		
9	Transport / shipping dimension and weights, space required for handling parts for maintenance	✓		
10	Write up on oil preservation system.	✓	✓	
11	Write up on OLTC.	✓	✓	
12	Quality assurance program.	✓	✓	
13	Programme for production and testing		✓	
14	General description of the equipment and all components, including brochures		✓	

S.no	Documents to be submitted	With the bid	After Award	
			For Approval	Prior to dispatch
15	Detailed dimension drawing for all components ,general arrangement drawing showing detailed component layout and detailed schematic and wiring drawings for all components like marshalling box and OLTC drive mechanism box.		✓	
16	Calculations to substantiate choice of electrical, structural, mechanical component size, ratings		✓	
17	Detailed loading drawing to enable the purchaser to design and construct foundations for the transformer.		✓	
18	Transport /shipping dimension with weights ,wheel base details, un tanking height etc.		✓	
19	Terminal arrangements and cable box details		✓	
20	Flow diagram of cooling system showing no. of cooling banks		✓	
21	Drawings of major components like bushing,CT etc		✓	
22	Valve schedule diagram plate		✓	
23	Instruction plate for flexible separator		✓	
24	Rating and diagram plate with OLTC connection details		✓	
25	Lists of makes of all fittings and accessories		✓	
26	Statement drawing attention to all exposed points in the equipment at which contact with or in close proximity to other metals and stating clearly what protection is employed to prevent corrosion at each point		✓	
27	Detailed installation and commissioning instructions		✓	
28	Inspection and test reports carried out in manufacturers works			✓
29	Test certificates of all bought out items.			✓
30	Operation and maintenance instructions as well as trouble shooting charts.			✓

ANNEXURE – A – SCOPE OF SUPPLY

Design, manufacture, assembly, testing at stages of manufacture as per Cl. 11 of this specification, final testing at manufacturer works on completely assembled transformer before dispatch, packing, transportation, delivery and submission of all documentation for the Power transformer with all accessories as below and ratings & requirements as specified in Annex C.

Sr No	Description	Scope of Supply
1.0	Fully assembled transformer with all major parts like conservator, Radiators, Marshalling box, Protective devices as per Clause 5.0 of this specification, Fittings and accessories as per Clause 6.0 of this specification	YES
1.1	OLTC as per this specification	YES
1.2	RTCC panel as per this specification	No
1.3	HV, LV ,LV NEUTRAL cable boxes	YES
1.4	Support steel material for support of cable boxes from ground	YES
1.5	Foundation Bolts for complete transformer	YES
1.6	Nickel Plated brass double compression weather proof glands for 33kV cables	YES
1.7	Long barrel medium duty Aluminum lugs for power cables	YES
1.8	Nickel Plated brass double compression weatherproof glands and tinned copper lugs for control cable termination in Marshalling box for vendor's cables	YES
1.9	Cables and wires for transformer accessories and internal wiring of marshalling box.	YES
1.10	Touch up paint, minimum 5 liters.	YES
1.11	Extra Transformer oil 10 % in non returnable drums	YES
1.12	One spare complete set of gaskets.	YES
1.13	One set (4 Nos in a set) of anti rolling clamp for 90 lb rail.	YES
1.14	Ordinary thermometers 4 Nos'	YES
1.15	Recommended spares as per manufacturer	YES
2.0	Routine testing as per Clause 11 of this specification	YES
3.0	Type testing as per Clause 11 of this specification	YES
4.0	Special testing as per Clause 11 of this specification	YES
5.0	Submission of Documentation as per clause 16 of this specification	YES

ANNEXURE – B – SERVICE CONDITIONS

1.0	Delhi Atmospheric condition	
1.1	Average grade atmosphere	Heavily polluted, dry
1.2	Maximum altitude above sea level	1000M
1.3	Ambient air temperature	50 deg C
1.4	Relative humidity	90% Max
1.5	Seismic zone	4
1.6	Rainfall	750 mm concentrated in four months

ANNEXURE – C – TECHNICAL PARTICULARS (DATA BY OWNER)

Sr No	Description	Data by Owner	
1.0	Location of equipment	OUTDOOR	
2.0	Reference design ambient temperature	40 deg C	
3.0	Type	Oil immersed, core type, step down	
4.0	Type of cooling	ONAN / ONAF	
5.0	Reference standard	IS: 2026	
6.0	No. of phases	3	
7.0	No. of winding per phase	2	
8.0	Rated frequency (Hz)	50 Hz	
9.0	Rated voltage (kV)		
9.1	HV winding	33	66
9.2	LV winding	11	11
10.0	Vector group reference	Dyn11	Dyn11
11.0	Nominal continuous rating, KVA		
11.1	For 20/25 MVA		
	ONAN	20	20
	ONAF	25	25
11.2	For 25/31.5 MVA		
	ONAN	25	25
	ONAF	31.5	31.5
12.0	Impedance at principal tap at rated frequency with IS tolerance		
12.1	For 20/25 MVA	15% (for 25MVA)	15% (for 25MVA)
12.2	For 25/31.5 MVA	15% (for 31.5MVA)	15% (for 31.5MVA)
13.0	Maximum no load loss at rated condition allowed without any positive tolerance kW		
13.1	For 20/25 MVA	12kW (for 25 MVA),	12kW (for 25 MVA),
13.2	For 25/31.5 MVA	14 kW (for 31.5 MVA)	14 kW (for 31.5 MVA)
14.0	Maximum load loss at rated condition @ 75 deg C and principal tap allowed without any positive		

	tolerance, kW		
14.1	For 20/25 MVA	85 kW (for 25MVA),	85 kW (for 25MVA),
14.2	For 25/31.5 MVA	115 kW (for 31.5 MVA	115 kW (for 31.5 MVA
15.0	Terminal connection / cable / conductor size		
15.1	HV side	33kV	66 kV
		By 2 runs of 3C X400sq mm A2XFY ,33kV(E) grade cable for 20/25 MVA.	By single /Double ACSR "ZEBRA" conductor per phase
15.2	LV side	1) By 3 runs of 1C x 1000 sqmm per phase A2XY unarmoured cable 11 kV (E) grade cable (For 25MVA) 2) By 4 runs of 1C x 1000 sqmm per phase A2XY unarmoured cable 11 kV (E) grade cable (For 31.5MVA)	
15.3	LV neutral	By G .S. strip mim 2x75x10 mm size	By G.S. strip min 2x75x10 mm size
16.0	Highest system voltage HV side, kV	36	72.5
17.0	Highest system voltage LV side, kV	12	12
18.0	Lightning impulse withstand voltage, kV peak		
18.1	For nominal system voltage of 11 kV	75	
18.2	For nominal system voltage of 33 kV	170	
18.3	For nominal system voltage of 66 kV	325	
19.0	Power frequency withstand voltage kV rms		
19.1	For nominal system voltage of 11 kV	28	
19.2	For nominal system voltage of 33 kV	70	
19.3	For nominal system voltage of 66 kV	140	
20.0	Clearances phase to phase, mm		
20.1	For nominal system voltage of 11 kV	280	
20.2	For nominal system voltage of 33 kV	350	
20.3	For nominal system voltage of 66 kV	700	
21.0	Clearances phase to earth, mm		

21.1	For nominal system voltage of 11 kV	140
21.2	For nominal system voltage of 33 kV	320
21.3	For nominal system voltage of 66 kV	660
21.4	Ground clearance – Live part to ground for 66kV – mm	4000
22.0	System fault level, HV side	1500 MVA for 33 kV 3600 MVA for 66 kV
23.0	System fault level, LV side	500 MVA for 11 kV
24.0	Short circuit withstand capacity of the transformer	
24.1	Three phases dead short circuit at secondary terminal with rated voltage maintained on the other side	For 3 secs.
24.2	Single phase short circuit at secondary terminal with rated voltage maintained on the other side	For 3 secs.
25.0	System earthing	
25.1	HV	Solidly earthed
25.2	LV	Solidly earthed
26.0	Overload capability	As per IS 2026 part 7
27.0	Noise level	Shall not exceed limit as per NEMA TR- 1 with all accessories running measured as per IEC 551 / NEMA standard
28.0	Radio influence voltage	Maximum 250 microvolt
29.0	Harmonic suppression	Transformer to be designed for suppression of 3rd, 5th, 7th harmonic voltage and high frequency disturbances
30.0	Partial discharge	10 Pico C
31.0	Temperature rise of top oil by thermometer	40 deg C
32.0	Temperature rise of winding by resistance	45 deg C
33.0	Note for the bidders	(left blank)
34.0	Tapping to be provided on HV winding for OLTC	For 33/11 kV & 66/11kVTransformer +10% to -10% @step of 1.25 % 16 taps, 17 tap positions
35.0	Maximum flux	1.9 Tesla

	density allowed in the core extreme over excitation /over fluxing, Tesla	
36.0	Maximum current density allowed	3.0 Amperes per sqmm @ lowest tap.
37.0	AVR input voltage/ Auxiliary supply	Not applicable
38.0	Bushing parameters	
38.1	Rated Current for 20/25 MVA Xmer	1000 A for 33 kV bushing 2000 A for 11kV bushing
38.2	Creepage factor for all bushing mm /KV	31 mm / kV minimum
38.3	Rated thermal short time current for all bushing	25 times rated current for 2 secs
38.4	Angle of mounting	0 to 90 degree
38.5	Cantilever withstand load	for 33 kV bushing- as per std. vendor 2000N for 11kV bushing
38.6	Overall Length (Approx)	for 33 kV bushing- as per std. vendor 503 mm for 11 kV bushing
38.7	Diameter of base	100 mm

ANNEXURE – D – TECHNICAL SPECIFICATION FOR TRANSFORMER OIL

Codes and standards

Latest revision of following codes and standards with all amendments-

Cl no.	Standard no	Title
1.1	IS 335	New insulating oils
1.2	IS1783	Drums for oils

2.0 Properties

Sr No	Item description	Specification requirement
2.1	**Function**	
2.1.1	Viscosity	
2.1.1.1	Viscosity at 40^0C	15 mm^2/s, Max
2.1.1.2	Viscosity at 0^0C	1800 mm^2/s, Max
2.1.2	Pour Point	- 10^0C, Max
2.1.3	Water content	30 mg/Kg, Max
2.1.4	Breakdown voltage	
2.1.4.1	New unfiltered oil	30 kV, Min
2.1.4.2	After filtration	70 kV, Min
2.1.5	Density at 20^0C	0.895 g/ml, Max
2.1.6	Dielectric dissipation factor at 90^0C	0.005, Max
2.1.7	Particle Content	Manufacturer to specify the data
2.2	**Refining/Stability**	
2.2.1	Appearance of oil	Clear, free from sediment and suspended matter
2.2.2	Acidity	0.01 mg KOH/g, Max
2.2.3	Interfacial tension at 27^0C	0.04 N/m, Min
2.2.4	Total sulphur content	Manufacturer to specify the data
2.2.5	Corrosive sulfur	Not-corrosive
2.2.6	Potentially Corrosive sulfur	Not-corrosive
2.2.7	DBDS	Not detectable (<5 mg/kg)
2.2.8	Inhibitor	Not detectable (<0.01%)
2.2.9	Metal Passivator	Not detectable (<5 mg/kg)
2.2.10	Other additives	Manufacturer to specify the data
2.2.11	2-furfural and related Compounds content	Not detectable (<0.05 mg/kg) for each individual compound
2.3	**Performance**	
2.3.1	Oxidation stability, test duration 164 h	
2.3.1.1	Total acidity	1.2 mg KOH/g, Max
2.3.1.2	Sludge	0.8%, Max
2.3.1.3	DDF at 90^0C	0.5, Max

2.3.2	Gassing Tendency	Manufacturer to specify the data
2.3.3	ECT	Manufacturer to specify the data
2.4	**Health,safety and Environment**	
2.4.1	Flash point	135^0C, Min
2.4.2	PCA content Max	3%, Max
2.4.3	PCB content	Not detectable (<2 mg/Kg)

ANNEXURE – E– SPECIFICATION FOR SILICAL GEL BREATHER

This specification is intended to cover the manufacturing, testing at manufacturer's works, supply and delivery of "Silica Gel Breather" to the purchaser.

1.0 Scope of Supply

Silica Gel Breather shall be as per REL specification suitable for use in Power Transformer (Main
Tank conservator & OLTC conservator) & for Distribution Transformer (Tank Conservator)

2.0 General

Silica Gel Breather offered by seller shall be suitable for continuous operation of prevailing climatic conditions as mentioned in Annexure –B

3.0 Specific Requirement

3.1 Breather

1.	Body	Aluminium pressure die caste Short Blasted & Powder Coated
2.	Container	Polycarbonate : 143R grade
3.	Oil Cup	Polycarbonate : 143R grade
4.	Gasket	Nitrile cork rubber for main body & oil cup gasket
5.	Silica Gel	Round ball type of size 2-5 mm (deep Blue)
6.	Paint	Powder Coated
7.	Mounting	Threaded for existing Transformers. Flanged type for New Transformers
8.	Hardware	Stainless Steel
9.	Flange Type, Size & hardware	Flange should be of circular shape with diameter of & with hardware of M10 bolts.

3.2 The indicating grade of Silica Gel, which shall be filled in the breather, is hard Blue Round Ball with considerable absorption power of moisture & hence signaling the saturation degree by changing colour (from Blue to Pink).

3.3 The breather shall have clear visibility of Gel colour & of oil level with dust particles in the oil cup from distance.

3.4 Breather should breathe only from the inlet holes provided for breathing. Air should not enter anywhere from the body of breather.

3.5 Silica Seal shall be applied on gasket for better air tightening.

3.6 Gel removing & refilling method is specially designed to avoid skilled labour requirement at site & consequent air leakages.

3.7 Oil filling indicator on oil cup.

3.8 Application

Transformer Size	Rating	Silica Gel Quantity in KG	
		Main Tank Conservator	OLTC Conservator
Power Transformer	20 & 31.5 MVA	5.0 Kg	1.0 Kg

3.9 Silica Gel

Sl. No	Properties	Requirement
1	Particle Size	Round ball type of size 2.5 mm (deep Blue)
2	Bulk Density	570-700 g/l
3	Moisture Adsorption Capacity 1. R.H. = 100% 2. R.H. = 50% 3. R.H. = 40% 4. R.H. = 20%	25 % (min)
4	Appearance	99.5% (min)
5	Friability	99.5% (min)
6	Chlorides percent by mass (max)	0.04%
7	Sulphates percent by mass (max)	0.5%
8	Cobalt percent by mass (max)	0.5%
9	Ammonium Compounds by mass (max)	0.001%
10	Loss on drying	4% (max)
11	pH of Aqueous extract	5-6.5%
12	Loss on Attrition	< 2.5 %

4.0 Marking

A Sticker label Indicating manufacturer's Name, Sr. No. Gel capacity etc. shall be provided at suitable place. Container may also marked with the Standard mark.

5.0 Testing

Breather container shall be suitably blanked & pressure tested with air at 0.35 Kg/cm for 30 minutes. There shall not be any leakages from gasketted joints. Test certificates from accredited laboratory shall be submitted.

6.0 Prototype

Before starting manufacture of the quantity ordered, the successful bidder shall submit a prototype for approval. Unless the prototype is inspected and approved, manufacturing shall not be started. The necessity of submitting prototype shall be ascertained before starting of manufacturing.

7.0 Packing & Keeping Quality

The material shall be packed in clean, dry & air tight container. The material stored in original air tight containers shall continue to satisfy all the properties of Silica Gel for not less than 6 months from date of packing.

8.0 Compliance Status / Deviation

Bidder shall indicate compliance status for every requirement & feature, on the right hand side margin of the specification.

9.0 Documents Comprising The Bid

The bidder shall complete the bid proposal sheets inclusive of copy of the specification duly filled in with compliance status, quality & operational manuals, Test certificates etc.

Indicating the material to be supplied, a brief description of the goods, their quantity and prices. In absence of these documents, the offer shall be considered incomplete & may be rejected.

ANNEXURE – F – MANUFACTURING QUALITY ASSURANCE PLAN

SL NO	COMPONENT & CHARACTRISTICS	CLASS	TYPE OF CHECK	QUALITY OF CHECK	REFERENCE DOCUMENT	ACCEPTANCE NORMS	FORMAT OF RECORD	AGENCY			REMARKS
								S	M	O	
1	2	3	4	5	6	7	8	9			10
A	**RAW Material**										
1	**Winding Conductor (PICC)**										
1.1	Bare Dimensions & Finish of Conductor	Major	Measurement	1 sample per size per lot	MFR. STD / IS 13730 Part 27	MFR. STD / IS 13730 Part 27	Supplier's TC	P	V	R	
1.2	Increase in dimensions due to Paper covering	Major	Measurement	-DO-	-DO-	-DO-	-DO-	P	V	R	
1.3	Resistivity @ 20°C	Major	Electrical	-DO-	-DO-	-DO-	-DO-	P	V	R	
1.4	No of Layers	Critical	Measurement	-DO-	-DO-	-DO-	-DO-	P	V	R	
1.5	Conductor Tensile strength	Critical	Mechanical	-DO-	-DO-	-DO-	-DO-	P	V	R	
1.6	Conductor Elongation	Critical	Mechanical	-DO-	-DO-	-DO-	-DO-	P	V	R	
1.7	% Overlap of Paper	Critical	Mechanical	-DO-	-DO-	-DO-	-DO-	P	V	R	
1.8	Corner Radius	Critical	Mechanical	-DO-	-DO-	-DO-	-DO-	P	V	R	
1.9	**Kraft Paper Insulation**										
1.9.1	Thickness	Major	Measurement	1 sample per size per lot	MFR. STD/ IEC 60554	MFR. STD/ IEC 60554	Supplier's TC	P	V	R	
1.9.2	Apparent Density	Major	Chemical	-DO-	-DO-	-DO-	-DO-	P	V	R	

SL NO	COMPONENT & CHARACTRISTICS	CLASS	TYPE OF CHECK	QUALITY OF CHECK	REFERENCE DOCUMENT	ACCEPTANCE NORMS	FORMAT OF RECORD	AGENCY			REMARKS
								S	M	O	
1	2	3	4	5	6	7	8	9			10
1.9.3	Air Permeability	Major	Chemical	-DO-	-DO-	-DO-	-DO-	P	V	R	
1.9.4	Tensile Index (Longitudinal and Transverse)	Major	Mechanical	-DO-	-DO-	-DO-	-DO-	P	V	R	
1.9.5	Electrical Strength in Air	Major	Electrical	-DO-	-DO-	-DO-	-DO-	P	V	R	
1.9.6	Ash Content	Major	Chemical	-DO-	-DO-	-DO-	-DO-	P	V	R	
1.9.7	pH of 5% Aqueous Extract	Major	Chemical	-DO-	-DO-	-DO-	-DO-	P	V	R	
1.9.8	Conductivity of 5% Aqueous Extract	Critical	Chemical	-DO-	-DO-	-DO-	-DO-	P	V	R	
1.9.9	Moisture Content	Major	Chemical	-DO-	-DO-	-DO-	-DO-	P	V	R	
1.9.10	Heat Stability	Major	Chemical	-DO-	-DO-	-DO-	-DO-	P	V	R	
1.9.11	Degree of Polymerization	Major	Chemical	-DO-	-DO-	-DO-	-DO-	P	V	R	
1.9.12	Elongation (MD & CMD)	Major	Mechanical	-DO-	-DO-	-DO-	-DO-	P	V	R	
1.9.13	Tear index	Major	Mechanical	-DO-	-DO-	-DO-	-DO-	P	V	R	
2.0	**CRGO Laminations (Watt absorption)**										
2.1	Specific Core Loss	Major	Electrical	Random	MFR. STD/IS 3024	MFR. STD/IS 3024	Supplier's TC	P	V	R	
2.2	Surface Insulation resistance	Major	Electrical	-DO-	-DO-	-DO-	-DO-	P	V	R	

SL NO	COMPONENT & CHARACTRISTICS	CLASS	TYPE OF CHECK	QUALITY OF CHECK	REFERENCE DOCUMENT	ACCEPTANCE NORMS	FORMAT OF RECORD	AGENCY			REMARKS
								S	M	O	
1	2	3	4	5	6	7	8	9			10
2.3	Ageing Test	Major	Measurement	-DO-	-DO-	-DO-	-DO-	P	V	R	
2.4	Stacking Factor	Major	Measurement	-DO-	-DO-	-DO-	-DO-	P	V	R	
2.5	Waviness	Major	Measurement	-DO-	-DO-	-DO-	-DO-	P	V	R	
2.6	Edge Burr	Major	Visual	-DO-	-DO-	-DO-	-DO-	P	V	R	
2.7	Sample testing for Checking Specific Core loss, accelerated ageing test, Surface insulation resistivity, AC permeability and magnetization, stacking factor, Ductility	Major	Electrical	**100%**	MFR. STD/IS 3024	MFR. STD/IS 3024	--	--	P	**W**	Sample will be randomly selected by BSES & will be send for testing at CPRI/ERDA lab.
3.0	**Un-impregnated Laminated Wood**										
3.1	Thickness	Major	Visual	1 sample size / LOT	MFR.D STD/ IEC 61061	MFR.D STD/IEC 61061	Supplier's TC	P	V	R	
3.2	Density	Major	Chemical	-DO-	-DO-	-DO-	-DO-	P	V	R	
3.3	Moisture Content	Major	Chemical	-DO-	-DO-	-DO-	-DO-	P	V	R	
3.4	Oil Absorption	Major	Chemical	-DO-	-DO-	-DO-	-DO-	P	V	R	
3.5	Cross breaking strength	Major	Mechanical	-DO-	-DO-	-DO-	-DO-	P	V	R	
3.6	Compressive Strength	Major	Mechanical	-DO-	-DO-	-DO-	-DO-	P	V	R	

SL NO	COMPONENT & CHARACTRISTICS	CLASS	TYPE OF CHECK	QUALITY OF CHECK	REFERENCE DOCUMENT	ACCEPTANCE NORMS	FORMAT OF RECORD	AGENCY			REMARKS
								S	M	O	
1	2	3	4	5	6	7	8	9			10
3.7	Electric Strength in Oil	Major	Electrical	-DO-	-DO-	-DO-	-DO-	P	V	R	
3.8	Shrinkage in oil	Major	Mechanical	-DO-	-DO-	-DO-	-DO-	P	V	R	
3.9	Tensile Strength	Major	Mechanical	-DO-	-DO-	-DO-	-DO-	P	V	R	
4.0	**Press Boards (Pre-compressed)**										
4.1	Thickness	Major	Measurement	1 sample/Size/LOT	MFR. STD/ IEC 60641	MFR. STD/ IEC 60641	Supplier's TC	P	V	R	
4.2	Tensile Strength (MD & CMD)	Major	Mechanical	-DO-	-DO-	-DO-	-DO-	P	V	R	
4.3	Shrinkage in Air (MD & CMD)	Major	Mechanical	-DO-	-DO-	-DO-	-DO-	P	V	R	
4.4	Moisture Content	Major	Chemical	-DO-	-DO-	-DO-	-DO-	P	V	R	
4.5	Oil Absorption	Major	Chemical	-DO-	-DO-	-DO-	-DO-	P	V	R	
4.6	Electrical Strength in Oil and air	Major	Electrical	-DO-	-DO-	-DO-	-DO-	P	V	R	
4.7	pH of 5% aqueous extract	Major	Chemical	-DO-	-DO-	-DO-	-DO-	P	V	R	
4.8	Conductivity of 5% aqueous extract	Major	Chemical	-DO-	-DO-	-DO-	-DO-	P	V	R	
4.9	Compressibility	Major	Mechanical	-DO-	-DO-	-DO-	-DO-	P	V	R	
4.10	Ash Content	Major	Chemical	-DO-	-DO-	-DO-	-DO-	P	V	R	

SL NO	COMPONENT & CHARACTRISTICS	CLASS	TYPE OF CHECK	QUALITY OF CHECK	REFERENCE DOCUMENT	ACCEPTANCE NORMS	FORMAT OF RECORD	AGENCY			REMARKS
								S	M	O	
1	2	3	4	5	6	7	8	9			10
4.11	Apparent density	Major	Chemical	-DO-	-DO-	-DO-	-DO-	P	V	R	
4.12	Elongation (MD & CMD)	Major	Mechanical	-DO-	-DO-	-DO-	-DO-	P	V	R	
5.0	**Tank and its accessories**										
5.1	Structural steel										
5.1.1	Thickness	Major	Measurement	Random	MFR. STD / IS 2062	MFR. STD / IS 2062	Suppliers TC	P	V	R	
5.1.2	Yield Strength	Major	Mechanical	-DO-	-DO-	-DO-	-DO-	P	V	R	
5.1.3	Tensile Strength	Major	Mechanical	-DO-	-DO-	-DO-	-DO-	P	V	R	
5.1.4	Elongation	Major	Mechanical	-DO-	-DO-	-DO-	-DO-	P	V	R	
5.1.5	Bend test	Major	Mechanical	-DO-	-DO-	-DO-	-DO-	P	V	R	
5.2	**Manufacturing of Tank and acc.**										
5.2.1	Dimension check	Major	Measurement	100%	MFR. Spec/ DRG	MFR. Spec/ DRG	MFR. Fabrication report	P	W	R	
5.2.2	Joint preparation	Major	Measurement	100%	-DO-	-DO-	-DO-	P	V	R	
5.2.3	Assembly and alignment	Major	Visual and measurement	100%	MFR. Spec/ DRG	MFR. Spec/ DRG	MFR. Fabrication report	P	V	R	
5.2.4	DP Test on Welds on	Major	DP Test	100%	-DO-	-DO-	-DO-	P	W	R	

SL NO	COMPONENT & CHARACTRISTICS	CLASS	TYPE OF CHECK	QUALITY OF CHECK	REFERENCE DOCUMENT	ACCEPTANCE NORMS	FORMAT OF RECORD	AGENCY			REMARKS
								S	M	O	
1	2	3	4	5	6	7	8	9			10
	Load bearing members eg. Jack Pads										
5.2.5	Pressure test	Major	Mechanical	On One unit	CBIP	CBIP	Test Report	--	P	W	**STAGE INSPECTION**
5.2.6	Vacuum test	Major	Mechanical	On One unit	CBIP	CBIP	Test Report	--	P	W	**STAGE INSPECTION**
5.2.7	Leakage test										
5.2.7.1	Main Unit	Major	Mechanical	100%	MFR. STD	MFR. STD	Test report	P	W	R	
5.2.7.2	Conservator	Major	Mechanical	100%	MFR. STD	MFR. STD	Test report	P	W	R	
5.2.7.3	Pipes	Major	Mechanical	100%	MFR. STD	MFR. STD	Test report	P	W	R	
5.2.8	Surface preparation	Major	Visual	100%	MFR. STD	MFR. STD	MFR. Fabrication report	P	V	R	
5.2.9	Final Paint Coat (including Primer), Thickness & Shade	Major	Measurement	100%	MFR. STD	MFR. STD	Test report	P	V	R	
5.2.10	Paint Peel off test	Major	Visual	100%	MFR. STD	MFR. STD	Test report	--	P	R	
6.0	**Porcelain insulators**										
6.1	Make and rating	Critical	Visual	100%	IS 8603/IS 2099/App.Drg.	IS 8603/IS 2099/App.Drg.	Supplier's TC	P	V	R	
6.2	Visual inspection for surface smoothness, any	Critical	Visual	100%	-DO-	-DO-	-DO-	P	V	R	

SL NO	COMPONENT & CHARACTRISTICS	CLASS	TYPE OF CHECK	QUALITY OF CHECK	REFERENCE DOCUMENT	ACCEPTANCE NORMS	FORMAT OF RECORD	AGENCY			REMARKS
								S	M	O	
1	2	3	4	5	6	7	8	9			10
	damage, etc.										
6.3	Important dimension including Creepage distance	Major	Measurement	One sample /size / lot	-DO-	-DO-	-DO-	P	V	R	
6.4	All Routine electrical tests	Major	Electrical	100%	-DO-	-DO-	-DO-	P	V	R	
7.0	**Magnetic Oil Gauge**										
7.1	Make and dimensions	Major	Physical	100%	App.Drg./ Supplier Catalogue	App.Drg./ Supplier Catalogue	Supplier's TC	P	V	R	
7.2	Test for level (eg at 30° Max)	Major	Mechanical	100%	-DO-	-DO-	-DO-	P	V	R	
7.3	Switch contact test	Major	Electrical	100%	-DO-	-DO-	-DO-	P	V	R	
7.4	Leakage test	Major	Mechanical	100%	-DO-	-DO-	-DO-	P	V	R	
7.5	Switch operating and setting	Major	Electrical	100%	-DO-	-DO-	-DO-	P	V	R	
7.6	Di-electric test at 2 KV AC between live terminal and body	Major	Electrical	100%	-DO-	-DO-	-DO-	P	V	R	
8.	**Buchholz relay**										
8.1	Make and type	Critical	Visual	100%	App.Drg./ Supplier Catalogue /IS 3637	App.Drg./ Supplier Catalogue /IS 3637	Supplier's TC	P	V	R	

SL NO	COMPONENT & CHARACTRISTICS	CLASS	TYPE OF CHECK	QUALITY OF CHECK	REFERENCE DOCUMENT	ACCEPTANCE NORMS	FORMAT OF RECORD	AGENCY			REMARKS
								S	M	O	
1	2	3	4	5	6	7	8	9			10
8.2	Bore size	Major	Measurement	One/size	-DO-	-DO-	-DO-	P	V	R	
8.3	Porosity and element test	Major	Critical	100%	-DO-	-DO-	-DO-	P	V	R	
8.4	Gas volume and surge test	Major	Mechanical	One/Size	-DO-	-DO-	-DO-	P	V	R	
8.5	HV test at 2 KV AC & IR test	Major	Electrical	100%	-DO-	-DO-	-DO-	P	V	R	
8.6	Continuity for alarm/Trip	Major	Electrical	100%	-DO-	-DO-	-DO-	P	V	R	
9.0	**Marshalling cum cooler control box**										
9.1	Dimensions	Critical	Measurement	100%	MFR. STD / App. DRG.	MFR. STD / App. DRG.	Supplier's TC	P	W	R	
9.2	Make and rating of Components	Major	Visual	100%	-DO-	App Make	Supplier's TC	P	W	R	
9.3	Functional test	Major	Electrical	100%	-DO-	MFR. STD / DRG	Supplier's TC	P	W	R	
9.4	HV test at 2 KV AC for 1 min	Major	Electrical	100%	-DO-	MFR. STD / DRG	Supplier's TC	P	W	R	
9.5	IP 55 test on marshalling cum cooler control box	Major	Environment	--	--	--	Test report	--	--	R	Supplier's Test certificate shall be submitted for review
10.0	**Radiator**										

SL NO	COMPONENT & CHARACTRISTICS	CLASS	TYPE OF CHECK	QUALITY OF CHECK	REFERENCE DOCUMENT	ACCEPTANCE NORMS	FORMAT OF RECORD	AGENCY			REMARKS
								S	M	O	
1	2	3	4	5	6	7	8	9			10
10.1	Dimension, number of sections	Major	Measurement	100%	MFR. DRG	VTD DRG	Supplier's TC	P	V	R	
10.2	Leakage Test with Air	Major	Visual	100%	As per CBIP	As per CBIP	Supplier's TC	P	V	R	
10.3	Paint shade	Major	Visual & Measurement	Random	MFR. Specs /Drg	MFR. Specs /Drg	Supplier's TC	P	V	R	
10.4	Surface Preparation	Major	Measurement	100%	SA 2.5 of ISO 8503/2	SA 2.5 of ISO 8503/2	Supplier's TC	P	V	R	
11	**OLTC and drive mechanism**										
11.1	Make, Rating and model	Major	Visual	100%	MFR. Spec/ IS 8468 /IEC 214-1989	MFR. Spec/ IS 8468 /IEC 214-1989	Supplier's TC	P	V	R	
11.2	Copper Contact surface finish	Major	Visual	100%	IS 8468	IS 8468	Supplier's TC	P	V	R	
11.3	Contact Resistance test	Major	Visual	100%	Supplier's STD	Supplier's STD	Supplier's TC	P	V	R	
11.4	Electrical Routine test	Major	Electrical	100%	IS 8468/ IEC 214	IS 8468/ IEC 214	Supplier's TC	P	V	R	
11.5	Mechanical test on diverter switch including pressure test	Major	Mechanical	100%	-DO-	-DO-	-DO-	P	V	R	
11.6	HV test for Auxiliary	Major	Electrical	100%	-DO-	-DO-	-DO-	P	V	R	

SL NO	COMPONENT & CHARACTRISTICS	CLASS	TYPE OF CHECK	QUALITY OF CHECK	REFERENCE DOCUMENT	ACCEPTANCE NORMS	FORMAT OF RECORD	AGENCY			REMARKS
								S	M	O	
1	2	3	4	5	6	7	8	9			10
	circuit										
11.7	Mechanical test on Tap selector switch with motor drive	Major	Mechanical	100%	-DO-	-DO-	-DO-	P	V	R	
11.8	Pressure test for Oil Compartment	Major	Mechanical test	100%	-DO-	-DO-	-DO-	P	V	R	
12.0	**Transformer Oil**	Major	Testing	One Sample from each lot	Annexure D of BSES spec.	Annexure D of BSES spec.	STC	P	V	R	One sample of oil shall be drawn from **each lot of Transformer** offered for final inspection by BSES representative and same shall be tested at CPRI/ERDA lab as per relevant std.
13.0	**OTI / WTI**										
13.1	Make and Model	Critical	Visual	100%	MFR. STD/App. Drg.	MFR. STD/App. Drg.	Suppliers TC	P	P	R	
13.2	Calibration	Major	Electrical	100%	-DO-	-DO-	-DO-	P	P	R	
13.3	Check for alarm & trip	Major	Electrical	100%	-DO-	-DO-	-DO-	P	P	R	

SL NO	COMPONENT & CHARACTRISTICS	CLASS	TYPE OF CHECK	QUALITY OF CHECK	REFERENCE DOCUMENT	ACCEPTANCE NORMS	FORMAT OF RECORD	AGENCY			REMARKS
								S	M	O	
1	2	3	4	5	6	7	8	9			10
	signal operation against set value										
13.4	HV test	Major	Electrical	100%	-DO-	-DO-	-DO-	P	V	R	
13.5	Switch Setting	Major	Mechanical	100%	-DO-	-DO-	-DO-	P	P	R	
14.0	**Bushing Metal parts**										
14.1	Dimension Checks	Major	Mechanical	100%	MFR. STD /IS 3347	MFR. STD /IS 3347	Supplier's TC	P	V	R	
14.2	Surface Finish	Major	Visual	100%	-DO-	-DO-	-DO-	P	V	R	
15.0	**Current Transformers**										
15.1	Dimensions, make	Major	Measurement	100%	MFR. STD /App. DRG. / IS 2705	MFR. STD /App. DRG. / IS 2705	Supplier's TC	P	P	R	
15.2	Rating and terminal marking	Major	Physical	100%	MFR. APPD. DRG	MFR. APPD. DRG	Supplier's TC	P	P	R	
15.3	Measurement of ratio and phase angle error	Major	Electrical	100%	IS 2705	IS 2705	Supplier's TC	P	V	R	
15.4	High Voltage test	Major	Electrical	100%	-DO-	-DO-	-DO-	P	V	R	
15.5	Inter-Turn insulation test	Major	Electrical	100%	-DO-	-DO-	-DO-	P	V	R	
15.6	Knee Point Voltage	Major	Electrical	100%	-DO-	-DO-	-DO-	P	V	R	Only for CI-PS CT
15.7	Excitation Current	Major	Electrical	100%	-DO-	-DO-	-DO-	P	V	R	Only for CI-PS

SL NO	COMPONENT & CHARACTRISTICS	CLASS	TYPE OF CHECK	QUALITY OF CHECK	REFERENCE DOCUMENT	ACCEPTANCE NORMS	FORMAT OF RECORD	AGENCY			REMARKS
								S	M	O	
1	2	3	4	5	6	7	8	9			10
											CT
15.8	Secondary winding resistance	Major	Electrical	100%	-DO-	-DO-	-DO-	P	V	R	Only for CI-PS CT
15.9	Polarity	Major	Electrical	100%	-DO-	-DO-	-DO-	P	V	R	
16.0	**Valves/ Butterfly valves**										
16.1	Make & operation	Critical	Visual	100%	APP.drg./MFR. STD	APP.drg./MFR. STD	Supplier's TC	P	P	R	
16.2	Leakage test for body	Major	Mechanical	100%	-DO-	-DO-	-DO-	P	P	R	
16.3	Leakage test for top spindle	Major	Mechanical	100%	-DO-	-DO-	-DO-	P	P	R	
16.4	Mounting dimensions	Major	Measurement	100%	-DO-	-DO-	-DO-	P	P	R	
16.5	Material of Body & Seat	Major	Chemical & measurement	1 sample per lot	-DO-	-DO-	-DO-	P	V	R	
17.0	**Air Cell**										
17.1	Make	Critical	Visual	100%	MFR. STD/App. drg.	MFR. STD/App. drg.	Supplier's TC	P	V	R	
17.2	Dimensional check	Major	Measurement	100%	-DO-	-DO-	-DO-	P	V	R	
17.3	Pressure test for 24 hrs. for leakage	Major	Mechanical	100%	-DO-	No Visible Damage	-DO-	P	V	R	
17.4	Inflation and deflation test (10 times)	Critical	Mechanical	100%	-DO-	-DO-	-DO-	P	V	R	

SL NO	COMPONENT & CHARACTRISTICS	CLASS	TYPE OF CHECK	QUALITY OF CHECK	REFERENCE DOCUMENT	ACCEPTANCE NORMS	FORMAT OF RECORD	AGENCY			REMARKS
								S	M	O	
1	2	3	4	5	6	7	8	9			10
18.0	**Pressure relief Valve**										
18.1	Make	Critical	Visual	100%	MFR. STD/ App. Drg.	MFR. STD/ App. Drg.	-DO-	P	P	R	
18.2	Operating pressure	Major	Mechanical	100%	-DO-	-DO-	-DO-	P	P	R	
18.3	Switch Contact test	Major	Electrical	100%	-DO-	-DO-	-DO-	P	P	R	
18.4	Mounting dimensions	Major	Measurement	100%	-DO-	-DO-	-DO-	P	V	R	
18.5	HV test between body & terminal	Major	Electrical	100%	-DO-	-DO-	-DO-	P	V	R	
19.0	**Fan Motor & Cooler Fan**										
19.1	Verification of Make & rating	Major	Physical	100%	MFR. STD/App. DRG.	MFR. STD/App. DRG.	Supplier's TC	P	V	R	
19.2	Input current power speed	Major	Electrical	100%	-DO-	-DO-	-DO-	P	V	R	
19.3	HV test at 2.0 KV	Major	Electrical	100%	-DO-	-DO-	-DO-	P	V	R	
19.4	Insulation resistance test	Major	Electrical	100%	-DO-	-DO-	-DO-	P	V	R	
20.0	**Gasket**										
20.1	Appearance & Finish	Major	Mechanical	1 sample per size per lot	IS 4253-II, 1980	IS 4253-II, 1980	Supplier's TC	P	V	R	
20.2	Hardness, IRHD	Major	Mechanical	-DO-	-DO-	-DO-	-DO-	P	V	R	
20.3	Tensile Strength	Major	Mechanical	-DO-	-DO-	-DO-	-DO-	P	V	R	

SL NO	COMPONENT & CHARACTRISTICS	CLASS	TYPE OF CHECK	QUALITY OF CHECK	REFERENCE DOCUMENT	ACCEPTANCE NORMS	FORMAT OF RECORD	AGENCY			REMARKS
								S	M	O	
1	2	3	4	5	6	7	8	9			10
20.4	Compressibility	Major	Mechanical	-DO-	-DO-	-DO-	-DO-	P	V	R	
20.5	Compression set	Major	Mechanical	-DO-	-DO-	-DO-	-DO-	P	V	R	
20.6	Flexibility	Major	Mechanical	-DO-	-DO-	-DO-	-DO-	P	V	R	
21.0	**Silica gel Breather**										
21.1	Type / model	Major	Visual	100%	MFR. STD /DRG	MFR. STD /DRG	Supplier's TC	P	V	R	
21.2	Color of Gel	Major	Visual	100%	-DO-	-DO-	-DO-	P	V	R	
B	**In Process**										
1	**Winding**										
1.1	Check for Visual, physical and dimensional Parameters and no. of parallel conductors.										
1.1.1	Measurement of axial height, OD & ID& current density calculation.	Major	Measurement	100%	MFR. Data/Drg	MFR. Data/Drg	QC report	--	P	W	
1.1.2	Copper Conductor size (Bare & covered)	Major	Measurement	100%	-DO-	-DO-	-DO-	--	P	W	
	Copper conductor finishing (free of sharp edges and have no	Major	Visual	100%	MFR. STD /DRG	MFR. STD /DRG	QC report				

SL NO	COMPONENT & CHARACTRISTICS	CLASS	TYPE OF CHECK	QUALITY OF CHECK	REFERENCE DOCUMENT	ACCEPTANCE NORMS	FORMAT OF RECORD	AGENCY			REMARKS
								S	M	O	
1	2	3	4	5	6	7	8	9			10
	burrs)										
1.1.3	No. of Turns / Disc	Major	Measurement	100%	-DO-	-DO-	-DO-	--	P	R	
1.2	Winding height	Major	Measurement	100%	-DO-	-DO-	-DO-	--	P	W	
1.3	Visual inspection of Brazed joints as applicable	Major	Visual	100%	-DO-	-DO-	-DO-	--	P	R	
1.4	Tap Leads termination in case of tap winding	Major	Visual	100%	-DO-	-DO-	-DO-	--	P	R	
1.5	Current density calculation	--	--	--	--	--	--	--	P	W	
2.0	**Core Assembly**										
2.1	Visual & Key Dimensional check										
2.1.1	Diagonal distance	Major	Measurement	100%	MFR.Drg	MFR.Drg	QC report	--	P	W	
2.1.2	Window centre distance	Major	Measurement	100%	-DO-	-DO-	-DO-	--	P	W	
2.1.3	Window height	Major	Measurement	100%	-DO-	-DO-	-DO-	--	P	W	
2.2	Stack Thickness	Major	Measurement	100%	-DO-	-DO-	-DO-	--	P	W	
2.3	High Voltage test at 2 KV AC for I min between core & core clamp, Yoke bolt	Major	Electrical	100%	-DO-	-DO-	-DO-	--	P	W	

SL NO	COMPONENT & CHARACTRISTICS	CLASS	TYPE OF CHECK	QUALITY OF CHECK	REFERENCE DOCUMENT	ACCEPTANCE NORMS	FORMAT OF RECORD	AGENCY			REMARKS
								S	M	O	
1	2	3	4	5	6	7	8	9			10
2.4	Pre-Core loss measurement	Major	Electrical	100%	-DO-	-DO-	-DO-	--	P	W	
3.0	**Core-Coil Assembly**										
3.1	Top & Bottom insulation arrangement	Major	Visual	100%	MFR.Data /DRG	MFR.Data /DRG	QC report	--	P	R	
3.2	Lead arrangement	Critical	Visual	100%	-DO-	-DO-	-DO-	--	P	R	
3.3	Tap & Lead End Brazing & Insulation	Critical	Visual	100%	-DO-	-DO-	-DO-	--	P	R	
3.4	Dimension of Coil After Shrinkage	Major	Measurement	100%	-DO-	-DO-	-DO-	--	P	R	
3.5	Verification of Major electrical clearances	Major	Visual & Measurement	100%	-DO-	-DO-	-DO-	--	P	R	
3.6	HV/LV Connection	Major	Visual	100%	-DO-	-DO-	-DO-	--	P	R	
4.0	**Core-Coil Assembly Before Ovening**										
4.1	Initial Ratio test	Major	Measurement	100%	-DO-	-DO-	-DO-	--	P	R	
5.0	**Core-coil assembly during drying**										
5.1	Measurement & recording of temperature & drying time during vacuum treatment.	Major	Visual	100%	MFR.Data /DRG	MFR.Data /DRG	QC report	--	P	R	

SL NO	COMPONENT & CHARACTRISTICS	CLASS	TYPE OF CHECK	QUALITY OF CHECK	REFERENCE DOCUMENT	ACCEPTANCE NORMS	FORMAT OF RECORD	AGENCY			REMARKS
								S	M	O	
1	2	3	4	5	6	7	8	9			10
5.2	Check for completeness of drying	Major	Visual	100%	MFR.Data /DRG	MFR.Data /DRG	QC report	--	P	R	
5.3	Certification of all test	Major	Visual	100%	MFR.Data /DRG	MFR.Data /DRG	QC report	--	P	R	
6.0	**Core-Coil Assembly After Ovening**										
6.1	Ratio Test & Magnetic Balance test	Major	Electrical	100%	-DO-	-DO-	-DO-	--	P	W	
6.2	Recording of time/Temp, Vacuum	Major	Measurement	100%	-DO-	-DO-	-DO-	--	P	R	
6.3	Record of Moisture extract	Major	Measurement	100%	MFR. STD	MFR. STD	QC report	--	P	R	
6.4	Verification of completeness & Drying	Major	Verify	100%	MFR. STD	MFR. STD	QC report	--	P	R	
6.5	Insulation resistance measurement by Megger	Major	Electrical	100%	MFR. STD	MFR. STD	Test report	--	P	R	
6.6	Earthing connection	Major	Visual	-DO-	MFR. STD	MFR. STD	QC Report	--	P	R	
7.0	**Tanking**										
7.1	Electrical clearance arrangement	Major	Measurement	100%	MFR. DRG	MFR. DRG	QC report	--	P	R	
7.2	Verification of Core-Frame Clamping	Major	Visual	100%	-DO-	-DO-	-DO-	--	P	R	

SL NO	COMPONENT & CHARACTRISTICS	CLASS	TYPE OF CHECK	QUALITY OF CHECK	REFERENCE DOCUMENT	ACCEPTANCE NORMS	FORMAT OF RECORD	AGENCY			REMARKS
								S	M	O	
1	2	3	4	5	6	7	8	9			10
	arrangement										
7.3	Core to frame insulation resistance test & HV test at 2 KV for min	Major	Electrical	100%	-DO-	-DO-	-DO-	--	P	R	
8.0	**Final Assembly for testing**										
8.1	Fittings of external accessories	Major	Visual	100%	MFR. STD /DRG	MFR. STD /DRG	Job Card	--	P	R	
8.2	Internal Oil leakage test on main unit	Major	Visual	100%	CBIP	CBIP	QC report	--	P	R	
C	**Final testing**										
1	**Routine Test**										
1.1	Voltage Ratio test	Major	Electrical	100%	IS 2026	IS 2026	Test Report	--	P	W	
1.2	Winding Resistance at all tap corrected to 75°C	Major	Electrical	100%	IS 2026	IS 2026	Test report	--	P	W	
1.3	No Load Loss & Current @90%,100%&110% of rated voltage	Major	Electrical	100%	IS 2026	IS 2026	Test report	--	P	W	To be repeated after type test.
1.4	Impedance Voltage/Short Circuit Impedance(Principal Tap) Load Loss @Principal, Max, Mini Tap	Major	Electrical	100%	IS 2026	IS 2026	Test report	--	P	W	

SL NO	COMPONENT & CHARACTRISTICS	CLASS	TYPE OF CHECK	QUALITY OF CHECK	REFERENCE DOCUMENT	ACCEPTANCE NORMS	FORMAT OF RECORD	AGENCY			REMARKS
								S	M	O	
1	2	3	4	5	6	7	8	9			10
1.5	Induced over voltage	Major	Electrical	100%	IS 2026	IS 2026	Test report	--	P	W	To be repeated after Impulse test
1.6	Separate Source Voltage Test	Major	Electrical	100%	IS 2026	IS 2026	Test report	--	P	W	
1.7	Insulation Resistance &PI(10 min / 1 min)	Major	Electrical	100%	--	--	Test report	--	P	W	By 5 KV Megger PI Shall be more than1.5
1.8	Voltage Vector Relationship & Polarity	Major	Electrical	100%	IS 2026	IS 2026	Test report	--	P	W	
1.9	Magnetic Balance Test	Major	Electrical	100%	IS 2026	IS 2026	Test report	--	P	W	
1.10	Oil leakage test	Major	Visual	100%	CBIP	CBIP	Test report	--	P	W	
1.11	Auxiliary circuit insulation test for OLTC, 2.0 KV AC for 1 min	Major	Electrical	100%	--	Withstand 2 KV for 1 min	Test report	--	P	W	
1.12	Polarity check & Ratio Test of LVWTI CT/ HVWTI CT & NCT	Major	Electrical	100%	IS 2026	IS 2026	Test report	--	P	W	
1.13	Magnetic circuit Test at 2KV between Core & Frame	Major	Electrical	100%	IS 2026	IS 2026	Test report	--	P	W	
1.14	Measurement of auxiliary	Major	Electrical	100%	IS 2026	IS 2026	Test report	--	P	W	

SL NO	COMPONENT & CHARACTRISTICS	CLASS	TYPE OF CHECK	QUALITY OF CHECK	REFERENCE DOCUMENT	ACCEPTANCE NORMS	FORMAT OF RECORD	AGENCY			REMARKS
								S	M	O	
1	2	3	4	5	6	7	8	9			10
	losses(Losses taken by Fan)										
1.15	BDV test on Transformer Oil	Major	Electrical	100%	IS 2026	IS 2026	Test report	--	P	W	
1.16	Routine Test on Tank	Major	Electrical	100%	IS 2026	IS 2026	Test report	--	P	W	
1.17	Power frequency withstand on auxiliary circuit	Major	Electrical	100%	IS 2026	IS 2026	Test report	--	P	W	
1.18	Measurement of Cap & tandelta of Wdg, Oil and HV bushing	Major	Electrical	100%	--	--	Test report	--	P	W	
1.19	Excitation & Knee point Vol. of PS Core of NCT.	Major	Electrical	100%	IS 2026	IS 2026	Test report	--	P	W	
1.20	Routine (Functional) Test on OLTC	Major	Electrical	100%	IS 2026	IS 2026	Test report	--	P	W	
1.21	SFRA	Major	Electrical	100%	IS 2026	IS 2026	Test report	--	P	W	
2.0	**Type test (One unit of each type and rating of Transformer)**										
2.1	Heat Run Test (Temp. Rise Test)	Major	Testing	One Unit	IS 2026	IS 2026	Test Report	--	P	W	
2.2	Impulse withstand Test on all HV & LV Limb for Chopped wave.	Major	Testing	One Unit	IS 2026	IS 2026	Test Report	--	P	W	
2.3	DGA Test Before & After	Major	Testing	One Unit	Relevant std.	Relevant std.	Test Report	--	P	W	

SL NO	COMPONENT & CHARACTRISTICS	CLASS	TYPE OF CHECK	QUALITY OF CHECK	REFERENCE DOCUMENT	ACCEPTANCE NORMS	FORMAT OF RECORD	AGENCY			REMARKS
								S	M	O	
1	2	3	4	5	6	7	8	9			10
	temperature rise										
2.4	Pressure relief device test	Major	Testing	One Unit	MFR. STD	MFR. STD	Test Report	--	P	W	
3.0	**Other test**										
3.1	**Marshalling cum cooler control box**										
3.1.1	BOM verification	Major	Verification	100%	App MFR.Drg	App MFR.Drg	QC report	--	P	W	
3.1.2	Operation / Continuity of Wiring with OTI, WTI operation & other accessories	Major	Electrical	100%	MFR. STD	MFR. STD	QC report	--	P	W	
3.1.3	2 KV (HV test) on Marshalling cum cooler control box	Major	Electrical	100%	MFR. STD	MFR. STD	QC report	--	P	W	
3.1.4	Operation of Instruments(BR)	Major	Electrical	100%	MFR. STD	MFR. STD	QC report	--	P	W	
3.1.5	Visual & Dimensional check	Major	Measurement	100%	APPD MFR.Drg.	APPD MFR.Drg.	QC report	--	P	W	
4.0	**Special Test (One unit of each type and rating of Transformer)**										
4.1	Zero Phase Sequence Test	Major	Testing	One Unit	IS 2026	IS 2026	Test Report	--	P	W	
4.2	Noise Level Test	Major	Testing	One Unit	NEMA TR-1	NEMA TR-1	Test Report	--	P	W	
4.3	No Load Harmonic Test	Major	Testing	One Unit	IS 2026	IS 2026	Test Report	--	P	W	

SL NO	COMPONENT & CHARACTRISTICS	CLASS	TYPE OF CHECK	QUALITY OF CHECK	REFERENCE DOCUMENT	ACCEPTANCE NORMS	FORMAT OF RECORD	AGENCY			REMARKS
								S	M	O	
1	2	3	4	5	6	7	8	9			10
4.4	HV Test on all auxiliary equipment and wiring after complete assembly	Major	Testing	One Unit	--	--	Test Report	--	P	W	
D	**Dispatch & Packing**										
1.1	Identification & packing	Major	Visual	100%	As per packing list	As per packing list	Packing List	--	P	--	
1.2	Check for proper Packing	Major	Visual	100%	As per packing list	As per packing list	Packing List	--	P	--	
1.3	Visual check before dispatch	Major	Visual	100%	As per packing list	As per packing list	Packing List	--	P	--	

LEGEND:

S: Supplier
M: Main Contractor (Manufacturer)
O: Owner (BYPL)

P - Perform
V - Verify
R – Review
W- Witness

ANNEXURE – G – TECHNICAL SPECIFICATION OF MATERIAL TRACKING -GPS DEVICE

Supply of GPS Device shall be in Vendors scope, however it shall be returned to Vendor once Goods are received.

Detailed requirement of GPS Device is as below:

Once the material is dispatched after Final clearance Transport Vehicle shall have GPS Tracking Device and status of dispatch of material shall be sent to all the stake holders via SMS thru GPS Device.

Approve make is Map my India Asset Tracking device.

SCHEDULE – A –GUARANTEED TECHNICAL PARTICULARS (DATA BY SELLER)

Sr.No.	Particular	Specified / Required	Offered
1.0	General		
1.1	Make		
1.2	Type	As per Annexure C of specification	
2.0	Nominal continuous rating, KVA		
2.1	ONAN	As per Cl 11.1 of Annexure C	
2.2	ONAF	As per Cl 11.2 of Annexure C	
3.0	Rated voltage (KV)		
3.1	HV winding	As per Cl 9.1 of Annexure C	
3.2	LV winding	As per Cl 9.2 of Annexure C	
4.0	Rated current (Amps)		
4.1	HV winding, ONAN / ONAF		
4.2	LV winding , ONAN / ONAF		
5.0	Connections		
5.1	HV winding	As per Annexure C of specification	
5.2	LV winding	As per Annexure C of specification	
5.3	Vector group reference	Dyn11	
6.0	Impedance at principal tap rated current and frequency%		
6.1	Impedance (%)	As per Cl. 12.0 of Annexure C	
6.2	Reactance (%)		
6.3	Resistance (%)		
6.4	Impedance at lowest tap rated current and frequency		
6.5	Impedance at highest tap rated current and frequency		
6.6	Transformer X/R ratio		
7.0	Resistance of the winding at 75^0C at principal tap (ohm)		
7.1	a) HV		
7.2	b)LV		
8.0	Zero sequence impedance (Ohm)		
8.1	a) HV		
8.2	b) LV		
9.0	Guaranteed maximum losses at principal tap at full load and 75^0 C without any positive tolerance kW		
9.1	No load losses (max.)	As per Cl 13.0 Annexure C	
9.2	Load losses (max.)	As per Cl 14.0 Annexure C	
9.3	Cooler fan losses (max.)		
9.4	Total I^2R losses of windings @ 75 deg C		
9.5	Total stray losses @ 75 deg C		

9.6	Total losses (max.)		
9.7	No load loss at maximum permissible voltage and frequency (approx.) kW		
10.0	Temperature rise over reference design ambient of 40 ^{0}C		
10.1	Top oil by thermometer ^{0}C	40^0 C	
10.2	Winding by resistance ^{0}C	45^0 C	
10.3	Winding gradient at rated current ^{0}C		
10.3.1	HV		
10.3.2	LV		
11.0	Efficiency		
11.1	Efficiency at 75^0 C and unity power factor %		
11.1.1	At 110% load		
11.1.2	At 100% load		
11.1.3	At 80% load	Not less than 99.5 %	
11.1.4	At 60% load		
11.1.5	At 40% load		
11.1.6	At 20% load		
11.2	Efficiency at 75^0 C and 0.8 power factor lag %		
11.2.1	At 110% load		
11.2.2	At 100% load		
11.2.3	At 80% load		
11.2.4	At 60% load	Not less than 99.5 %	
11.2.5	At 40% load		
11.2.6	At 20% load		
11.3	Maximum efficiency %		
11.4	Load and power factor at which Max efficiency occurs		
12.0	Regulation (%)		
12.1	Regulation at full load at 75^0 C		
12.1.1	At unity power factor		
12.1.2	At 0.8 power factor lagging		
12.2	Regulation at 110% load at 75^0 C		
12.2.1	At unity power factor		
12.2.2	At 0.8 power factor lagging		
13.0	Tapping		
13.1	Type		
13.2	Capacity		
13.3	Range-steps x % variation	As per Annexure C of specification	
13.4	Taps provided on HV winding (Yes/No)	Yes	
14.0	OLTC gear		
14.1	Make		
14.2	Type		
14.3	Reference std		

14.4	No of compartment		
14.5	Mounting arrangement	Side mounted type although External Intank Type is also preferable	
14.6	Rated current Amp		
14.7	Rated step capacity, kVA		
14.8	Short circuit withstand for 2 secs, kA		
14.9	Time required for one step change sec.		
14.10	Rated voltage for motor, V AC		
14.11	Rating of motor		
14.12	Rated voltage for auxiliaries V		
14.13	Consumption of auxiliaries		
14.14	OLTC features as per specification, Yes/No		
14.15	Does the overload rating of OLTC match with that of the transformer under all conditions Yes/No		
16.0	Cooling system		
16.1	Type of cooling	As per Annexure C of specification	
16.2	No. of cooling unit groups		
16.3	Capacity of cooling units		
16.4	Mounting of radiators		
16.5	Number of radiators and Size		
16.6	Type & size of radiator header main valve		
16.7	Type & size of individual radiator valve		
16.8	Total radiating surface, sq mm		
16.9	Thickness of radiator tubes, mm	Minimum 1.2 mm	
16.10	Schematic flow diagram of the cooling system furnished (Yes/No)		
16.11	Type and make of Fan motor		
16.12	No. of fan motor per bank (Working + Standby)		
16.13	Rated Power Input (kW)		
16.14	Rated Voltage, Speed of Motor		
16.15	Efficiency of motor at Full load(%)		
16.16	Locked Rotor current(Amps)		
17.0	Details of tank		
17.1	Material	Robust mild steel plate without pitting and low carbon content	
17.2	Thickness of sides mm		
17.3	Thickness of bottom mm		
17.4	Thickness of cover mm		
17.5	Confirmation of tank designed and tested for vacuum pressure (Ref: CBIP manual) (Yes/No)		
17.5.1	Vacuum mm of Hg. / (kN/m^2)	As per CBIP	

17.5.2	Pressure mm of Hg	Twice the normal head of oil / normal pressure + 35 kN/m^2 whichever is lower , As per CBIP	
17.6	Is the tank lid slopped?	Yes	
17.7	Inspection cover provided (Yes/No)		
17.8	Location of inspection cover (Yes/No)		
17.9	Min. dimensions of inspection cover (provide list of all inspection cover with dimension), mm x mm		
18.0	Core		
18.1	Type:	Core	
18.2	Core material grade	Premium grade minimum M3 or better	
18.3	Thickness of lamination mm	Max. 0.23 mm with insulating coating on both sides	
18.4	Insulation between core lamination		
18.5	Design flux density of the core at rated condition at principal tap,Tesla		
18.6	Maximum flux density allowed in the core at extreme over excitation / overfluxing , Tesla		
18.7	Equivalent cross section area of core, mm^2		
18.8	Guaranteed No load current at 90% / 100% / 110% rated voltage & frequency (Amp)	@ 100% - 0.5% of RFLC @ 110% - 1.0% of RFLC	
18.8.1	HV		
18.8.2	LV		
19.0	Type of winding		
19.1	HV		
19.2	LV		
19.3	Conductor material	Electrolytic copper as per relevant standard	
19.4	Maximum current density allowed, Amp per mm^2	As per Annexure C	
19.5	Gauge/area of cross section of conductor, mm^2		
19.5.1	HV		
19.5.2	LV		
19.6	Maximum current density achieved in winding (LV/HV/HVT) – Amps/ mm^2		
19.7	Insulating material type		
19.7.1	HV turn		
19.7.2	LV turn		
19.7.3	LV- core		
19.7.4	HV-LV		

19.8	Insulating material thickness, mm		
19.8.1	HV turn		
a.	Thickness		
b.	Thermal class		
c.	Dielectric strength		
d.	Moisture content		
e.	Thermal stability		
19.8.2	LV turn	-	
a.	Thickness		
b.	Thermal class		
c.	Dielectric strength		
d.	Moisture content		
e.	Thermal stability		
19.8.3	LV to core		
a.	Thickness		
b.	Thermal class		
c.	Dielectric strength		
d.	Moisture content		
e.	Thermal stability		
19.8.4	HV to LV		
a.	Thickness		
b.	Thermal class		
c.	Dielectric strength		
d.	Moisture content		
e.	Thermal stability		
20.0	Minimum design clearance , mm		
20.1	HV to earth in air		
20.2	HV to earth in oil		
20.3	LV to earth in air		
20.4	LV to earth in oil	-	
20.5	Between HV & LV in Air		
20.6	Between HV & LV in oil		
20.7	Top winding and yoke	-	
20.8	Bottom winding and yoke		
21.0	Insulating oil		
21.1	Quantity of oil Ltrs	-	
21.1.1	In the transformer tank		
21.1.2	In each radiator		
21.1.3	In OLTC chamber		
21.1.4	Total quantity		
21.2	10% excess oil furnished?	Yes	
21.3	Type of oil	New insulating oil as per IS: 335, latest edition and Cl. 4.2.7 of the specification	
21.4	Oil preservation system provided (Yes/No)		

22.0	Bushing		
22.1	Make		
22.2	Type		
22.3	Reference standard		
22.4	Voltage class, kV		
22.4.1	HV side bushing		
22.4.2	LV side line and neutral bushing		
22.5	Creepage factor for all bushing mm / kV	As per Annexure C of specification	
22.6	Rated current , Amp		
22.6.1	HV bushing		
22.6.2	LV line and neutral bushing		
22.7	Rated thermal short current		
22.7.1	HV bushing	As per Annexure C of specification	
22.7.2	LV line and neutral bushing	As per Annexure C of specification	
22.8	Weight Kg		
22.8.1	HV bushing		
22.8.2	LV line and neutral bushing		
22.9	Free space required for bushing removal, mm		
22.9.1	HV bushing		
22.9.2	LV line and neutral bushing		
23.0	Terminal connections		
23.1	HV	As per Annexure C of specification	
23.2	LV	As per Annexure C of specification	
23.3	LV Neutral	As per Annexure C of specification	
24.0	H.V. Cable box/Terminals		
24.1	Suitable for cable/conductor type size	As per Annexure C of specification	
24.2	Termination height , mm	1000 mm , minimum	
24.3	Gland plate dimension mm x mm		
24.4	Gland plate material	Aluminium	
24.5	Gland plate thickness , mm	5 mm minimum	
24.6	Phase to clearance inside box / terminals , mm		
24.7	Phase to earth inside box / terminals , mm		
24.8	Cable box door arrangement as per clause 4.2.9.2		
25.0	L.V line side cable box		
25.1	Suitable for cable type , size	As per Annexure C of specification	
25.2	Termination height , mm	1000 mm , minimum	
25.3	Gland plate dimension mm x mm		
25.4	Gland plate material	Aluminum	
25.5	Gland plate thickness , mm	5 mm minimum	
25.6	Phase to clearance inside box / terminals , mm		

25.7	Phase to earth inside box , mm					
25.8	Cable box door arrangement as per clause 4.2.9.2					
26.0	LV Neutral cable box					
26.1	Suitable for cable type , size	As per Annexure C of specification				
26.2	Termination height , mm					
26.3	Gland plate dimension mm x mm					
26.4	Gland plate material	Aluminum				
26.5	Gland plate thickness , mm	5 mm minimum				
26.6	Phase to clearance inside box, mm					
26.7	Phase to earth inside box , mm					
27.0	Marshalling box cubical provided as per clause no. 4.2.11 of spec. (Yes / no)					
27.1	Mounting of marshalling box	Separate mounted				
28.0	Neutral Current Transformer (NCT)					
28.1	Type					
28.2	Make					
28.3	Reference standard					
28.4	Rated Voltage	12kV				
28.5	CT Ratios	20/25 MVA, Dyn11		25/31.5 MVA, Dyn11		
		Core 1	Core 2	Core 1	Core 2	
		1600/1 A	1600/1A	1600-2000/1 A	1600-2000/1 A	
28.6	Burden ,VA	-	20	-	20	
28.7	Class of Accuracy	PS	5P20	PS	5P20	
28.8	KPV , volts , minimum	40(Rct +8)	-	40(Rct+ 8)	-	
28.9	Resistance, ohm @ 75 deg C, maximum	1	-	1	-	
28.10	Magnetizing current @ Vk/4 , mA , maximum	30	-	100	-	
28.11	Short time withstand current	26.3 kA for 3 sec.				
29.0	Winding current transformer (WCT)					
29.1	Type					
29.2	Make					
29.3	Reference standard					
29.4	CT ratio					
29.5	Burden ,VA	Manufacturer Std.				
29.6	Class of accuracy	Manufacturer Std.				
30.0	Pressure release device					
30.1	Minimum pressure the device is set to rupture					

30.1.1	For main tank		
30.1.2	For OLTC		
31.0	Alarm and trip contact ratings of protective devices		
31.1	Rated/making/ breaking currents , Amp @ voltage for		
31.1.1	PRV for main tank		
31.1.2	PRV for OLTC		
31.1.3	Buchholz relay		
31.1.4	Oil surge relay for OLTC		
31.1.5	Sudden pressure relay		
31.1.6	OTI		
31.1.7	WTI		
31.1.8	Magnetic oil gauge		
32.0	Fittings accessories each transformer furnished as per clause No. (Bidder shall attach separate sheet giving details, make and bill of materials)		
33.0	Painting: as per clause for the transformer , cable boxes, radiator, marshalling box, etc (Yes/No)		
34.0	Over all transformer dimensions		
34.1	Length , mm	6.5 metres maximum	
34.2	Breadth , mm	5.0 metres maximum	
34.3	Height , mm	5.0 metres maximum	
35.0	Transformer tank dimensions		
35.1	Length , mm		
35.2	Breadth , mm		
35.3	Height , mm		
36.0	Marshalling box dimensions		
36.1	Length , mm		
36.2	Breadth , mm		
36.3	Height , mm		
37.0	Weight data		
37.1	Core, kG		
37.2	Frame parts, kG		
37.3	Core and frame, kG		
37.4	Total winding, kG		
37.5	Core and frame winding, kG		
37.6	Tank, kG		
37.7	Tank lid, kG		
37.8	Empty conservator tank , kG		
37.9	Each radiator empty , kG		
37.10	Total weight of all radiator empty , kG		
37.11	Weight of oil in tank , kG		

37.12	Weight of oil in each conservator , kG		
37.13	Weight of oil in each radiators , kG		
37.14	Total weight of oil in radiator , kG		
37.15	OLTC gear including oil , kG		
37.16	Total transport weight of the transformer , kG		
37.17	Total transport weight of the transformer with OLTC and all accessories		
38.0	Volume data		
38.1	Volume of oil in main tank , liters		
38.2	Volume of oil between highest and lowest levels of main conservator ,liters		
38.3	Volume of oil between highest and lowest levels of OLTC conservator, liters		
38.4	Volume of oil in each radiator , liters		
38.5	Total volume of oil in radiators , liters		
38.6	Volume of oil in OLTC , liters		
38.7	Transformer total oil volume , liters		
39.0	Shipping data		
39.1	Weight of heaviest package, kG		
39.2	Dimensions of the largest package (L x B x H) mm		
40.0	Tests		
40.1	All in process tests confirmed as per Cl. (Yes /No)		
40.2	All types tests confirmed as per Cl. (Yes /No)		
40.3	All in routine tests confirmed as per Cl. (Yes /No)		
40.4	All in special tests confirmed as per Cl. (Yes /No)		

SCHEDULE – B –GUARANTEED TECHNICAL PERTICULARS OF TRANSFORMER OIL

Bidder to submit hard copy duly filled & signed along with techno commercial offer. Bidder to submit separate GTP for each type of insulating oil

S no	Item description	Specification requirement	Data by Vendor
1.0	Manufacturer Name		
1.1		Address	
1.2		Contact person	
1.3		Contact telephone no	
2.0	**Function**		
2.1	Viscosity		
2.1.1	Viscosity at 40^0C	15 mm^2/s, Max	
2.1.2	Viscosity at 0^0C	1800 mm^2/s, Max	
2.2	Pour Point	- 10^0C, Max	
2.3	Water content	30 mg/Kg, Max	
2.4	Breakdown voltage		
2.4.1	New unfiltered oil	30 kV, Min	
2.4.2	After filtration	70 kV, Min	
2.5	Density at 20^0C	0.895 g/ml, Max	
2.6	Dielectric dissipation factor at 90^0C	0.005, Max	
2.7	Particle Content	Manufacturer to specify the data	
3.0	**Refining/Stability**		
3.1	Appearance of oil	Clear, free from sediment and suspended matter	
3.2	Acidity	0.01 mg KOH/g, Max	
3.3	Interfacial tension at 27^0C	0.04 N/m, Min	
3.4	Total sulphur content	Manufacturer to specify the data	
3.5	Corrosive sulfur	Not-corrosive	
3.6	Potentially Corrosive sulfur	Not-corrosive	
3.7	DBDS	Not detectable (<5 mg/kg)	
3.8	Inhibitor	Not detectable (<0.01%)	
3.9	Metal Passivator	Not detectable (<5 mg/kg)	
3.10	Other additives	Manufacturer to specify the data	
3.11	2-furfural and related Compounds	Not detectable	

	content	(<0.05 mg/kg) for each individual compound	
4.0	**Performance**		
4.1	Oxidation stability, test duration 164 h		
4.1.1	Total acidity	1.2 mg KOH/g, Max	
4.1.2	Sludge	0.8%, Max	
4.1.3	DDF at 90^0C	0.5, Max	
4.2	Gassing Tendency	Manufacturer to specify the data	
4.3	ECT	Manufacturer to specify the data	
5.0	**Health, safety and Environment**		
5.1	Flash point	135^0C, Min	
5.2	PCA content Max	3%, Max	
5.3	PCB content	Not detectable (<2 mg/Kg)	

SCHEDULE – C–RECOMMENDED SPARES (DATA BY SUPPLIER)

List of recommended spares as following –

Sr No	Description of spare part	Unit	Quantity
1		No	
2		No	
3			
4			
5			
6			
7			

Annexure-E

BSES

Technical Specification of Nitrogen Injection Fire Protection System (NIFPS)

Specification no - BRPL-TS-24-NIFP-R0

Revision		R0
Date		25-Nov-2024
Pages		14
Prepared by:	Javed Ahmed	
Reviewed by:	Abhinav Srivastava	
Approved by:	Gopal Nariya	

Generic Technical Specifications of the Nitrogen Injection Fire Prevention and Extinguishing System (NIFPES) applicable for Oil filled Transformers and Reactors

1. Introduction

1.1 Electrical transformers are the main pillars of the power system network for enabling the transformation of voltage/ current and conveyance of electrical energy (electricity) so that the Utilities are able to supply electricity to consumers with a good degree of reliability and quality. At the same time, the Utilities endeavour to keep their assets in safe and secure conditions by providing protective equipment/systems which would help in properly maintaining the health and preventing damage to the equipment.

1.2 Any failure of transformer would have an adverse impact on the supply of power and satisfactory operation and performance of the power system. In cases involving fire in transformers, power outages, damage to assets, life and property are the common consequences. Transformer may fail because of many reasons, sometimes the failure of transformer leads to the emergence of fire, which becomes quite dangerous resulting into loss of assets, nearby equipment, living beings, and ecology. NIFPES is one of the measures to prevent and extinguish the fire taking place in the transformers.

2. Scope

2.1 Nitrogen Injection Fire Prevention and Extinguishing System (NIFPES) provided by the manufacturer/ vendor shall be complete in all respects. The scope shall cover design, supply, installation, connections, testing, commissioning and after-sales service of the system all associated items specified in these specifications.

2.2 The scope also includes the provision of heat/ fire detectors (sensors) herein after referred as the detector, required pipes, cable connections etc.

2.3 All other components meant for activation and successful operation of the NIFPES shall be provided by the manufacturer.

2.4 Transformer manufacturer/client will provide all the necessary support for the effective installation of NIFPES to each other and the purchaser shall make available the required transformer tripping signals as needed for the successful functioning of the NIFPES. Requisite drawings etc will also be provided by the utilities/manufacturer of the transformer/reactor (to the OEM of NIFPES).

3. Specifications

3.1 Nitrogen Injection Fire Prevention and Extinguishing System (NIFPES) shall be designed to prevent the fire from taking place in the transformer and possible explosion of the transformer tank due to internal faults/ arcing etc. In case of fire inside the transformer tank, the NIFPES shall be capable of mitigating the fire, minimizing the damage to the transformer and thus avoiding the spread of fire.

3.2 NIFPES system shall work on the principle of 'drain and stir' method of transformer oil. On activation of NIFPES, it shall isolate conservator tank oil from the oil in the main transformer tank, drain a pre-determined quantity of oil from the tank top through drain valve to reduce the tank pressure, and inject nitrogen gas from the bottom side of the tank through the inlet valves to create stirring action and reduce the temperature of oil to prevent/ mitigate the fire. On the operation of NIFPES, the quantity of oil removed from the tank shall be such that adequate amount of oil shall remain in the transformer to cover the active part of the transformer i.e. the 'core-coil' assembly. The NIFPES shall be designed in such a way that in case of external fire, the NIFPES may be operated manually, after electrically isolating the transformers from all sides. During operation of NIFPES, the oil flow pumps should also be tripped in case of OFAF/OFWF cooling of transformers in line with discussion with the end user / utilities.

3.3 The detection set point of the detector shall be site configurable.

3.4 Electrical isolation of transformer through master trip in addition to breakers shall be an essential pre-condition for activation of NIFPES

3.5 Operational Controls

The system operation shall be automatic and shall be activated when the pre-set conditions of activation of the system are attained / triggered. .The maximum time period for extinction of fire from commencement of nitrogen injection into the transformer shall be 30 second. In addition to automatic operation, facility for remote operation from the control room / remote control center (RCC) and manual operation from the Fire Extinguishing Cubicle (FEC) shall also be provided. The system shall operate in the following situations:

3.5.1 System Activation in Fire Prevention Mode

3.5.1.1 To prevent fire and explosion in the transformer including that from internal fault/ arcing, signals from the following shall be used to activate the NIFPES:

(i) Operation of any of the protective relays i.e. differential or restricted earth fault (REF) or over current;

AND

(ii) Operation of any of the protective relays [Buchholz Relay or Pressure Relief Valve (PRV) or the signal from Rapid Pressure Rise Relay (RPRR)]

AND

(iii)Operation / Feedback of tripping of associated circuit breakers or Master Trip

3.5.1.2 Transformer shall be electrically isolated and then only the NIFPES shall operate. In case of some problem in main protection system, the NIFPES shall derive the activation signal from the backup protection system.

3.5.1.3 The exact logic for operation of NIFPES activation shall be finalized during detailed engineering and in consultation with the end user.

3.5.2 System Activation in Fire Detection Mode

3.5.2.1 In case of fire detection mode, signals from the following shall be used to activate the NIFPES:

(i) Heat / fire detectors (sensors);

AND

(ii) Operation of any of the protective relays [Buchholz relay or Pressure Relief Valve (PRV) or Rapid Pressure Rise Relay (RPRR)]

AND

(iii) Operation / Feedback of tripping of associated circuit breakers or Master Trip

3.5.2.2 Transformer shall be electrically isolated and then only the NIFPES shall operate. In case of some problem in main protection system the NIFPES shall derive the activation signals from the backup protection system.

3.5.2.3 The exact logic for system activation in fire detection mode shall be finalized during detailed engineering and in consultation with the end user.

3.5.3 Manual operation switch with a proper cover to avoid inadvertent operation of the switch, shall be provided in the control room / remote center and in FEC. Interlock shall be provided so that manual operation shall work only when the transformer is completely electrically isolated. NIFPES shall operate once the circuit breakers are isolated and feedback signal for isolation of breakers is received on NIFPES panel. The manual operation of NIFPES shall override the automatic operational mode and the operator shall ensure the complete isolation of the transformer before activation of the NIFPES.

3.5.4 The NIFPES manufacturer should provide the warning information on the Control Box and Fire Extinguishing Cubicle (FEC) that *"Ensure that HV, IV and LV breakers are open before operating in Manual Mode"* both in Hindi and English and the local language as prevalent.

3.6 Operation of System

3.6.1 On receiving the activation signal, the system shall:

i. Open the quick opening drain valve of the transformer to drain its top layer oil (pre-determined quantity) and shut off the transformer conservator isolation valve (TCIV) to prevent flow of oil from the conservator tank to the main transformer tank; and
ii. Open the valve to inject Nitrogen into the transformer tank to create stirring of oil.

3.6.2 There shall be interlock to prevent activation of the NIFPES, if the transformer is not

electrically isolated. There shall also be provision for isolating the NIFPES during maintenance and /or testing of the transformer.

3.6.3 The system shall be designed in such a manner that Nitrogen purging shall commence only after ensuring that the oil draining and TCIV operation has commenced.

3.7 Technical Particulars

3.7.1 The OEM of NIFPES shall be responsible for design of the complete system and shall submit the drawings and design calculations for the number of detectors, sizing of drain pipe, Nitrogen injection pipe, Nitrogen cylinder capacity, number of injection points etc and get approval from the user. The facility shall be provided to test the system by operation of valves [Nitrogen injection valve, TCIV and Oil Drain Valve (ODV)] when the transformer is in service, without actually draining the oil and injecting Nitrogen in real time operation by obtaining the feedback signal from the valve. The Nitrogen injection scheme shall be designed in such a way that the Nitrogen shall not enter the transformer tank even in case of passing/leakage of valve.

3.7.2 The oil drain mechanism may or may not be a part of the fire extinguishing cubicle.

3.7.3 The user shall provide two distinct station auxiliary DC / AC supplies for control power supply purposes. The system shall work on station DC / AC supply with voltage variation as per relevant standards. The control box of nitrogen injection fire prevention and extinguishing system shall have facility to receive these DC / AC supplies for auto changeover of supply. It shall be the Supplier's/ NIFPES OEM's responsibility to further distribute power to the required locations. In case system operational DC / AC power supply requirement is different than station auxiliary DC / AC supply, then all necessary converters shall be provided by the NIFPES OEM.

3.7.4 Following minimum indications and alarms shall be provided in the control cubicle in the control room:

(a) DC supply 'ON'
(b) AC supply 'ON'
(c) Total System Healthy
(d) DC supply fail
(e) AC supply fail
(f) System out of Service
(g) Differential relay trip
(h) Restricted Earth Fault (E/F) Relay Trip
(i) Overcurrent Relay Trip
(j) PRV trip / RPRR trip
(k) Buchholz Relay trip
(l) Master Relay trip [(HV, IV and LV (Tertiary Voltage)]
(m) Nitrogen cylinder pressure low
(n) Pre-Fire alarm

(o) Heat / Fire detector / Sensor faulty Signal
(p) Heat / Fire Detector / Sensor alarm signal
(q) Nitrogen injection Valve open
(r) Nitrogen injection Valve close
(s) Nitrogen injection Valve leakage
(t) Oil drain Valve open
(u) Oil drain Valve Close
(v) Leakage in Oil drain valve
(w) TCIV Open
(x) TCIV Closed
(y) Cable fault signal for interconnecting cable for transformer trip signals
(z) Auto operation failed
(aa) NIFPES system in Auto Mode
(bb) NIFPES system in Manual Mode
(cc) NIFPES system in Test / Maintenance mode

3.7.5 Other indicators, which supplier / user consider necessary shall also be provided.

3.7.6 The following push buttons shall be provided as a minimum:

(a) Mode Selection Switch, Auto / Manual / (test / Off)
(b) Lamp test push buttons
(c) System reset push button
(d) Detector reset push button, if applicable.
(e) Manual extinction push-button for manual operation of the system
(f) Hooter reset push button

3.7.7 The above indications may be in the form of Lamps / Annunciator Window / Human Machine Interface (HMI) as desired by end user.
3.7.8 Apart from the above list, Nitrogen cylinder pressure indication manometer with adequate number of adjustable 'Normally Opened (NO)' contacts shall also be provided in FEC. In addition to manometer for local reading a transmitter shall also be provided to monitor the reading to be displayed on control box in control room.
3.7.9 In case of fire in the transformer and fulfilling the conditions of defined logic for NIFPES operation for fire extinguishing mode or fire prevention mode, alarm (Audio & Visual) will be available in control room.

3.8 Technical Data Sheet:

3.8.1 The following are the technical requirements of the NIFPES:

Sl. No.	Item	Requirements
1.	Fire detection period on commencement of fire	Maximum 10 second
2.	Fire Extinction period on commencement of Nitrogen	Maximum 30 second

	injection	
3.	Fire detectors'/ sensors' "heat sensing" temperature	Flash point temperature of the transformer oil minus 5 ^{0}C with tolerance of +/- 2^{0}C.
4.	Power supply source (uninterrupted) for: a) Control Box b) Fire extinguishing cubicle	110/220 V DC (+10% /-15%) / 230 V AC 110/220 V DC (+10%/-15%) / 230 V AC
5.	Nitrogen Cylinder and Valve (PESO approved)	Cylinder as per IS:7285 (Part 2) and Valve as per IS:3224 (latest) both having the BIS Mark
6.	Nominal Cylinder Pressure	150 kg /cm^2 (+/- 10%)
7.	Minimum Cylinder Pressure for refilling	50 kg /cm^2
8.	Degree of protection of: (a) FEC (b) Heat (fire) detector / sensor and Signal / Junction box	(a) IP 65 (b) IP 65
9.	Steel Sheet of FEC, Control Box and Signal Box	All panels shall be fabricated from corrosion resistance Stainless Steel (SS 304) grade. The thickness of sheet shall be 3.0 mm minimum.
10.	Color of all panels and Nitrogen Injection pipes	Shade 538 of IS: 5
11.	Heat (fire) detector / sensor	OEM shall furnish the technical details
12.	Minimum distance of FEC from the Transformer	FEC should be at a safe distance from Transformer (preferably 5-7 meters). Firewall (minimum 2 hrs fire withstand capacity) will be provided around FEC with the height of 600 mm from the top of FEC to protect it from fire of the transformer.
13.	For conservator valve of flow-based mechanism, flow rate for closing of flow-based conservator isolation valve	Between 60-70 Ltrs. / Minute (lpm).
14.	Pipes (Oil Drain and Nitrogen Injection)	MS, GI coated, Class C as per IS: 1239, latest Standard.

3.8.2 In case the pressure in the nitrogen cylinder exceeds the rated pressure, there shall be a provision for extracting the excess nitrogen to attain the safe pressure in the nitrogen cylinder.

3.9 Details of Supply of System/ Equipment and Other Related Activities:

3.9.1 The fire extinguishing cubicle (FEC) with base frame and containing at least the following. (However, all other components that are necessary for fast, reliable and effective

working of the fire protection system shall deemed to be included in the scope of supply):

(i) Nitrogen gas cylinder and cylinder valve having the Petroleum and Explosive Safety Organization (PESO) certificates of sufficient capacity.
(ii) Pressure regulator with indicators for nitrogen pressure of the cylinder and actual injection pressure through nitrogen cylinder and manometer with sufficient number of adjustable 'Normally Open (NO)' contacts.
(iii) Oil Drain Assembly including oil drain valve and its equipment for operation, oil drain pipe extension of suitable size and strength for connecting pipes to Oil Storage Tank, along with level switch / oil seepage detecting sensor for detecting leakage in oil drain valve;
(iv) Mechanical release device for oil drain and nitrogen gas release;
(v) Limit switches for monitoring of the systems;
(vi) Panel lighting;
(vii) Flanges on top of the panel for connecting oil drain in case of oil drain mechanism is part of fire extinguishing cubicle (FEC) and nitrogen injection pipes for transformer;
(viii) Fire Extinguishing Cubicle (FEC) shall have proper illumination.
(ix) The heater with thermostat shall be provided in the FEC. Heater shall be operated as per the setting of the thermostat.
(x) Mandatory spares as applicable.

In case, oil drain mechanism is not a part of FEC – the related items shall be as per the Original Equipment Manufacturer's (OEM's) design however, the functional requirements shall have to be met.

The FEC shall be provided with canopy / shed protected from 3 sides to avoid water ingress and protect the FEC from direct sunlight and radiant heat. The canopy / shed shall be designed to cover almost more than half of the FEC height from top.

3.9.2 Control box / cubicle shall be installed in the control room of the substation for monitoring the NIFPES operation, automatic control and remote operation with alarms, indications, switches, push buttons, audio signal etc. Control Box / Cubicle should be microprocessor based / Programmable Logic controller (PLC) based, compatible to be interfaced with user's Supervisory Control and Data Acquisition (SCADA) system in the Substation / Switchyard.

3.9.3 The required number of detectors shall be located at strategic locations as finalized during detailed engineering. The location of detector shall be as per the design of OEM.

3.9.4 All the control / power cables between the NIFPES panel and the transformer, shall be Fire Survival Cable type up to the thermal limit (in case of fire and or explosion). Fire survival cables shall be suitable to withstand a temperature of 750 °C. Further, Technical Data sheet and applicable valid type test report as per applicable latest IS shall be submitted to the user during detailed engineering.

All cables shall be laid in GI conduits / pipes, if desired by the user.

3.9.5 Transformer Conservator Isolation Valve (TCIV) shall isolate the conservator oil from the main tank's oil. This valve shall be located in the piping between the conservator and the Buchholz relay.

3.9.6 The nitrogen gas cylinder shall be of sufficient capacity considering the actual quantity of the transformer oil. The margin of safety shall be 3 times the oil to be drained (as per OEM design), for example if the oil quantity to be drained is 1500 litres (i.e. 1.5 m^3) then 4.5 m^3 volume of nitrogen is required. Considering the rated pressure of the gas filled in the cylinder as150 kg/cm^2, accordingly the capacity of the nitrogen cylinder shall be decided by the OEM of NIFPES in consultation with transformer manufacturer.

3.9.7 SCADA compatibility

i. The NIFPES shall be provided with IEC 61850 / RS 485 / TCP IP compatible port or using suitable converters for integration with user's SCADA system.

ii. The ethernet switch, patch cord, Light Interface Unit (LIU) and Fibre Optic (FO) cable are not included in the present scope.

3.9.8 Drain Oil Storage Tank

A drain oil storage tank for each transformer shall be provided at suitable location with appropriate construction material having appropriate capacity (as decided by the user). All precautions shall be taken so that there is no overflow/spill of the drained oil. Design of the drain system and storage thereof to be provided by the OEM. In case the user has his own design of the drainage system, he can opt for the same.

4.0 Tests

i. Factory Acceptance Test (FAT)

Functional verification of the offered parameters of NIFPES shall be conducted at the works of NIFPES manufacturer. The Test procedure shall be as per **Annexure – A.**

ii. Type Test for Detector:

Type test report of the detector shall be submitted to the user along with the design/drawing documents. The detector shall be tested as per the procedure given below:

Test	Type	Procedure	Requirement	Observed Value

Testing of the detector	Type of the detector along with its make and model number is to be mentioned in this column	1. Detector is to be tested by immersing it in the heating liquid with temperature measurement arrangement or by suspending in hot air oven with temperature measurement. 2. The temperature of the liquid / air is to be increased at the rate of 1 ^{0}C per minute and reading of the thermocouples to be noted. 3. Thermocouple for measuring the temperature is to be provided at the tip / surface of the detector. 4. The temperature of the liquid / air is to be increased till the detector activates.	The detector shall activate at the flash point temperature of the transformer oil minus 5 ^{0}C with tolerance of +/- 2^{0}C	The temperature, at which the detector activates, is to be recorded.

iii. Site Acceptance Test (SAT) /Performance Test

a) SAT / Performance test of the NIFPES shall be carried out after the completion of installation at site. It shall also be ensured that the interfacing of NIFPES with SCADA has been completed by the user before SAT. These tests shall include simulation and verification of the response of the complete system without actual draining of the oil and injection of the Nitrogen gas. In addition to the above, additional mutually agreed tests as considered necessary shall be conducted. SAT shall also include to test the provisions as specified in Para-3.6 "**Operation of System**" above.

b) SAT shall also include demonstration of the system checking by simulation method when transformer is in online condition as mentioned in Para- 3.7 "**Technical Particulars**" above.

c) For flow based TCIV vendor to demonstrate the locking / closing of TCIV valve at specified flow rate as per technical data sheet. Necessary arrangements to demonstrate the requisite flow rate and measuring instruments as required shall be made available by OEM for conducting SAT.

d) Installation and pre-commissioning test after installation of the system shall be carried out jointly by the OEM and the user's representative before the system is put in service. All the system checks as per approved SAT procedure shall be performed to the satisfaction level of the end user / client.

Annexure – A

Format for the Factory Acceptance Test

1. **Visual Inspection:** Visual examination of the NIFPES equipment i.e. Fire Extinguishing Cubicle, Control box/cubicle, Signal Box, Transformer Conservator Isolation Valve, heat/fire detectors, cables, etc shall be made as per the approved drawings.

2. **Functional Test:** Functional test shall be carried out on one (1) set out of the total manufactured lot for the respective order as minimum in presence of user / user nominated inspection agency. Following are the list of critical items to be used in FAT out of manufactured lot for the respective Purchaser Order:

   (i) Fire Extinguishing Cubicle with its internals, Nitrogen cylinder meant for internal testing can be used during FAT testing. However, connection of cylinder shall be in line with regulator valve intended for dispatch.
   (ii) Control Box with its internal components and accessories.
   (iii) Signal box with its internal components and accessories.
   (iv) Detector
   (v) TCIV Valve.
   (vi) ODV Valve.
   (vii) SCADA compatibility of all the signals over RS 485 / IEC protocol as applicable.
   (viii) Pressure and leakage test on Oil storage Tank

3. Functional Test of Transformer Isolation Conservator Valve (TCIV):

Sl. No.	Test	Procedure	Requirement	Remarks
1.	Leakage Test	Immerse the TCIV (Valve body) in the oil at the inlet pressure of 4 kg/cm^2 for 6 hours.	There should be no leakage from TCIV body	
2.	TCIV Close test (A or B as per the Design of TCIV)	**A.** For oil flow rate based TCIV: i. Mount TCIV with approx. 3 degree inclination on test jig ii. Switch ON oil Pump iii. Increase oil flow rate gradually	➢ TCIV should close at flow rate specified herein. ➢ Flap closing shall be visible through transparent glass inspection window. ➢ Normally open (NO) contacts in TCIV should close / TCIV Close indication in control Box should be reflected.	

		B. For electrically operated TCIV: i. Mount TCIV with approximately 3 degree inclination on test jig ii. Generate a set of input signal for the activation of NIFPES system.	➢ TCIV should close. ➢ Flap closing shall be visible through transparent glass inspection window. ➢ Normally open (NO) contactsin TCIV should close/TCIV Close indication in control Box should be reflected.	
3.	Reset Test	Reset the TCIV in the normal position.	➢ Close contact in TCIV should become open/ TCIV open indication in control Box should be reflected. ➢ Flap opening shall be visible through transparent glass inspection window.	
4.	High voltage test	Apply 2 kV AC for 1 minute between terminals and body of TCIV	TCIV should withstand.	

4. Functional Tests for detector:

4.1 The operating temperature shall be as per the requirement mentioned in technical data sheet.

4.2 Live demonstration test: To verify the working of the system, live demonstration is to be conducted in both fire prevention and extinguishing mode. Following are to be ensured:

(i) Demonstration is to be carried out at the works of NIFPES Manufacturer. It shall be the responsibility of NIFPES manufacturer to arrange a suitable location for live testing.

(ii) A dummy tank of minimum 5000 litres oil capacity and filled with oil, should be used as a transformer tank for testing.

(iii) The detector for testing shall be placed as per the design of OEM.

(iv) The FEC and Control Box manufactured for the said Purchase Order are to be used for live testing.

(v) Separate filled Nitrogen cylinder should be used for live tests.

(vi) Testing shall be conducted as per procedure mentioned below:

5. Testing in Fire Prevention Mode

5.1 Procedure:

(i) Oil Drain Pipe, Nitrogen Injection pipe, FEC, Control box / Cubicle, Signal box, TCIV, oil storage tank with all necessary pipes and cable

connections shall be connected with transformer tank.

(ii) Nitrogen gas Cylinder pressure should be recorded.

(iii) The NIFPES System shall be made ON.

(iv) Any one set of input of the fire prevention mode shall be generated by a suitable method.

5.2 Observations/ Results:

(i) After fulfilling of required condition, system gets activated in auto mode.

(ii) Oil Drain shall be started and TCIV shall start closing.

(iii) Nitrogen should be injected.

5.2.1 Following Indications on control box will turn on:

a)	Differential trip / PRV trip/RPRR trip / Buchholz Relay trip / Master Relay trip [HV, IV and LV to ensure that the Circuit Breakers are open] Restricted Earth Fault (REF) Relay Trip / Overcurrent Relay Trip as per logic
b)	Nitrogen Injection valve open
c)	Oil Drain valve open
d)	TCIV Valve closed
e)	Audio Alarm activated

5.2.2 For flow based TCIV valve the LPM at which it closes shall be measured, which shall be in line as mentioned in technical specifications, and the recorded values to be noted.

5.3 Testing in Fire Detection Mode (By igniting the transformer oil of the tank)

5.3.1 **Procedure:**

i. There should be an opening on the dummy transformer tank to ignite the transformer oil.

ii. The detector for testing shall be placed as per the design of OEM.

iii. Oil Drain Pipe, Nitrogen Injection pipe, FEC, Control box, Signal box, TCIV, oil pit with all necessary pipes and cable connections shall be connected with dummy transformer tank.

iv. The NIFPES shall be made ON.

v. The Buchholz Relay or PRV or RPRR Trip and Master Relay trip (HV, IV and LV) Signal shall be activated by a suitable method.

vi. Ignite the transformer oil by any method such as pouring any flammable liquid or any suitable chemical spray and igniting the flame.

vii. Note the time taken between commencement of fire and fire detection (Fire Alarm signal is received) takes place.

viii. Note the time taken between commencement of Nitrogen injection and fire gets extinguished.

5.3.2 **Observations:**

(i) After fulfilling of required conditions of fire extinguishing mode system should get activated in auto fire extinguishing mode.
(ii) TCIV shall start closing and Oil Drain should start.
(iii) Nitrogen injection shall begin.
(iv) Following Indications on control box will turn on:

i)	PRV trip/RPRR trip / Buchholz Relay trip / Master Relay trip [HV, IV and LV] / Fire / Heat Detector as per logic
ii)	Nitrogen Injection valve open
iii)	Oil Drain valve open
iv)	TCIV Valve closed
v)	Audio Alarm activated

5.3.3 **Results:**

Sl. No.	Details	Requirement	Observations
1.	Fire detection period upon commencement of Fire	Maximum 10 seconds	..... Seconds
2.	Fire Extinction period on commencement of Nitrogen injection	Maximum 30 seconds	..... Seconds

****

BSES Rajdhani Power Limited
BSES Bhawan, Nehru Place, New Delhi- 19

TECHNICAL SPECIFICATION

FOR

STRUCTURAL WORK

Prepared by	Alok Mandal	for Mittal	Rev: 0
Reviewed by	Uttam Shukla	U Shukla	Date: 21.11.2025
Approved by	Deepti Sharma	U Shukla	

Scanned with CamScanner

Technical Specification Structural Work

1.0 GENERAL

1.1 The scope of specification covers design fabrication, proto assembly, supply and erection of galvanized steel structures for towers, girders, and equipment support structures, towers which shall be lattice type structures fabricated from structural steel conforming to IS: 2062(latest) The scope shall include supply and erection of all types of structures including bolts, nuts, washers, hangers, shackles, clamps, anti climbing devices, bird guards, step bolts, inserts in concrete, gusset plates equipment mounting bolts, structure earthing bolts, foundation bolts, spring and flat washers, fixing plates and any other items as required to complete the job.

1.2 The connection of all structures to their foundations shall be by base plates and embedded anchor/foundation bolts. All steel structures and anchor anchor/foundation bolts shall be galvanized. The weight of the zinc coating shall be at least 0.610 Kg/m2 for anchor bolts/foundation bolts and for structural members. One additional nut shall be provided below the base plate which may be used for the purpose of leveling.

2.0 DESIGN REQUIREMENTS FOR STRUCTURES

2.1 For design of steel structures loads such as dead loads, live loads, wind loads etc. shall be based on IS: 802 Part 1 Sec 1

2.2 For material and permissible stresses IS: 802, Part-1, Section-2 shall be followed in general. However additional requirements given in following paragraphs shall be also considered.

2.3 Minimum thickness of galvanized tower member shall be as follows:

Member	Minimum thickness (mm)
Leg members, ground wire Peak members/main members	5
Other members	4
Redundant members	4

2.4 Maximum slenderness ratios for leg members, other stressed members and redundant members for compression force shall be as per IS-802

2.5 Minimum distance from hole center to edge to adjacent hole shall be minimum 1.5 X bolt diameter. Minimum distance between center to center of holes shall be 2.5 x bolt diameter.

2.6 The minimum bolt diameter shall be 16 mm.

2.7 Step Bolts

In order to facilitate inspection and maintenance, the structures shall be provided with climbing devices. Each tower shall be provided with step bolts not less than 16mm diameter and 175mm long spaced not more than 450mm apart, staggered on faces on one leg extending from about 0.5M above ground level to the top of the tower. The step bolt shall conform to IS: 10238

2.8 Design Criteria

a) All structures be designed for the worst combination of dead loads, live loads, wind loads as per code IS 802 seismic forces as per code IS : 1893, importance factor of 1.5, loads due to deviation of conductor, load due to unbalanced tension in conductor, torsion load due to unbalanced vertical and horizontal forces, erection loads, short circuit forces shall be calculated considering a fault level of 31.5KA for 3 secs. IEC-865 may be followed for evaluation of short circuit forces.

b) Switchyard girders structure shall be designed for the two conditions i.e. normal condition and short circuit condition. In both conditions the design of all structures shall be based on the assumption that stringing is done only on one side i.e. all the three (phase) conductors broken on the other side. Factor of safety of 2.0 under normal conditions and 1.5 under short circuit condition shall be considered on all external loads for the design of switchyard structures, which are of lattice type.

c) Vertical load of half the span of conductors/string and the earth wires on either side of the beam shall be taken into account for the purpose of design. Weight of man with tools shall be considered as 150KGs for the design of structures.

d) Terminal / line take off girders shall be designed for a minimum conductor tension of 1000Kg per sub conductor per phase for 66KV. The distance between terminal girders and the dead end tower shall be taken as per standard. The design of these terminal girders shall also be checked considering +/- 30 deg deviation of conductor in both vertical and horizontal planes. For other girders the structural layout requirements shall be adopted in design.

e) The girders shall be connected with lattice columns be bolted joints.

f) All support structures used for supporting equipments shall be designed for the worst combination of dead loads, erection load. Wind load/seismic forces, short circuit forces. Short circuit forces shall be calculated considering a fault level of 31.5KA for 3 seconds.

g) Foundation bolts shall be designed for the loads for which the structures are designed

3.0 DESIGN DRAWINGS, BILL OF MATERIAL & DOCUMENTS

3.1 The contractor shall furnish design, drawing and BOMs to the Owner after award of the contract. However contractor shall have to prepare and submit any other drawings, bill of material additionally required during design and construction stage which the Owner feels necessary. In case Owner feels that any design drawing, BOM are to be modified even after its approval, contractor shall modify the design & drawings and resubmit the design drawing, BOM as required in the specification.

3.2 The fabrication drawings are to be provided and furnished by the contractor shall be based on design approved by Owner. These fabrication drawings shall be based on the design approved by the Owner. These fabrication drawings shall indicate complete details of fabrication and erection including all erection splicing details, lacing details, weld sizes and lengths. BOM in the Performa approved by the Owner shall be submitted. Bolt details and all customary details in accordance with standard structural engineering practice whether or not given by the Owner.

3.3 The fabrication work shall start only after the final approval to the design and drawings is accorded by the Owner. The design drawing should indicate not only profile, but section, numbers and sizes of bolts and details of typical joints.

3.4 Such approval shall however not relieve the contractor his responsibility for the safety of the structure and good connections and any loss or damage occurring due to defective fabrication design or workmanship shall be borne by the contractor.

4.0 FABRICATION OF STEEL MEMBERS

4.1 The fabrication and erection works shall be carried out generally in accordance with IS 802. A reference however may be made to IS 800 in case of non-stipulation of some particular provision in IS 802. All materials shall be completely shop fabricated and finished with proper connection material and erection marks for ready assembly in the field.

5.0 PROTO – ASSEMBLY

5.1 The component parts shall be assembled in such a manner that are neither twisted not otherwise damaged and shall be so prepared that the specific camber, if any, is provided. In order to minimize distortion in member the component parts shall be positioned by using the clamps, Clips, lugs, jigs and other suitable means and fasteners (bolts and weld) shall be placed in a balanced pattern. If the individual components are to be bolted, paralleled and tapered drifts shall be used to align the part so that the bolts can be accurately positioned.

5.2 Sample towers, beams and lightning masts and equipment structures shall be trial assembled in the fabrication shop and shall be inspected and cleared by contractor based on the design approval accorded by the Owner before mass fabrication.

5.3 Pursuant to above the BOM's along with proto-corrected fabrication drawing shall be prepared and submitted by the main vendor to Owner as document for information. Such BOM, which shall be the basis for the Owner to carry out inspection.

6.0 BOLTING

6.1 Every bolt shall be provided with two flat and one spring washer under the nut so that no part of the threaded portion of the bolt is within the thickness of the parts bolted together. Locking nut shall be provided with each grouting bolt.

6.2 All steel items, bolts, nuts and washers shall be hot dip galvanized.

6.3 2.0% extra nuts and bolts shall be supplied for erection.

7.0 WELDING

7.1 The work shall be done as per approved fabrication drawings, which clearly indicate various details of joints to be welded, type of weld, length and size of weld, whether shop or site weld etc. Symbols for welding on erection and shop drawings shall be according to IS 813. Efforts shall be made to reduce site welding so as to avoid improper joints due to constructional difficulties.

8.0 FOUNDATION BOLTS

8.1 Foundation bolts for the towers and equipment supporting structures and elsewhere shall be embedded in first stage concrete while the foundation is cast. The contractor shall ensure the proper alignment of these bolts to match the holes in the base plate.

8.2 The contractor shall be responsible for the correct alignment and leveling of all steel work on site to ensure that the towers/structures are plumb.

8.3 All foundation bolts for lattice structures are to be supplied by the contractor.

8.4 All foundation bolts shall be fully galvanized so as to achieve 0.610 kg. Per Sq.m. of Zinc coating as per specifications.

8.5 All foundation bolts shall conform to IS 5624 but the material shall be MS conforming to IS 2062.

9.0 STABILITY OF STRUCTURES

The method of grouting the column bases shall be subject to approval of Owner and shall be such as to ensure complete uniformity of contact over the whole area of the steel base. The contractor will be fully responsible for the grouting operations.

10.0 GROUTING

The method of grouting the column bases shall be subject to approval of Owner and shall be such as to ensure complete uniformity of contact over the whole area of the steel base. The contractor will be fully responsible for the grouting operations.

11.0 GALVANISING

11.1 All structural steel works and support shall be galvanized after fabrication.

11.2 Zinc required for galvanizing shall have to be arranged by the manufacturer. Purity of zinc to be used shall be 99.95% as per IS 209.

11.3 The contractor shall be required to make arrangement for frequent inspection by the Owner as well as continuous inspection by a resident representative of the Owner, if so desired for fabrication work.

12.0 TOUCH UP PAINTING

The touch up primers and paint shall consist of Zinc phosphate / Zinc chromate conforming to the requirements of IS 2074 with a pigment to be specified by the Owner.

13.0 INSPECTION BEFORE DESPATCH

13.1 Each part of the fabricated steel work shall be inspected as per approved quality plans and certified by the Owner or his authorized representative as satisfactory before it is dispatched to the erection site.

13.2 Such certification shall not relieve the contractor of his responsibility regarding adequacy and completeness of fabrication.

14.0 TEST CERTIFICATE

Copies of all test certificates relating to material by the contractor for the works shall be forwarded to the Owner.

15.0 ERECTION

The contractor should arrange on his own all plant and equipment, welding set, tools and tackles, scaffolding, trestles equipments and all other accessories and ancillaries required for carrying out erection without causing any stresses in the members which may cause deformation and permanent damage.

16.0 SAFETY & PRECAUTION

The contractor shall strictly follow at all fabrication, transportation and erection of steel structures, raw m, materials and other tools and tackles, the stipulations contained in Indian standard code for safety during erection of structural steel work.

17.0 DEVIATIONS

Deviation from this specification, if any, shall be clearly brought out in the offer. Unless owner explicitly accepts such deviations, it shall be considered that the offer fully complies with the specification.

Technical Specification

Of

Lightning Arrester

Specification no – BSES-TS-308-LIGAR-R0

Rev:		0
Date:		10 Oct 2025
Prepared by	Hemanshi Kaul	
Reviewed by	Uttam Shukla	
Approved by	Deepti Sharma	

Index

1.0 General Specification…… 03-08

2.0 Annexure – A : Scope & Documentation……09-10

3.0 Annexure – B : Ambient Conditions……....11-11

4.0 Annexure – C1 : Guaranteed Tech. Particulars for 66KV Lightning Arrester.....12-14

5.0 Annexure – C2 : Guaranteed Tech. Particulars for 33KV Lightning Arrester…..15-17

6.0 Annexure – D : Recommended spares (Data by supplier)……18-18

General Specification

1.0.0 Codes & Standards

Materials, equipment and methods used in the manufacture of Lightning Arresters shall conform to the latest edition of following –

National Standards

Standard Code	Standard Description
	Indian Electricity Rules
	Indian electricity act
	CBIP manual
IS : 3070 – Part 3	Lightning Arresters for Alternating Current Systems
IS : 2071 - Part I	Method of high voltage testing
IS : 2629 - 1985	Recommended Practice for Hot-Dip Galvanizing of Iron and Steel
IS : 5621 - 1980	Hollow insulators for use in electrical equipment
IS : 6639 - 1972	Specification for Hexagon Bolts for Steel Structures

International Standards

Standard Code	Standard Description
IEC 60099-4-2001	Metal-Oxide Surge Arresters without gaps for AC Systems

Important Note :

In the event of direct conflict between various order documents, the precedence of authority of documents shall be as follows –

i. Specification including applicable codes, standards
ii. Guaranteed Technical Particulars (GTP)
iii. Approved Vendor Drawings

Sr. No.	Description	Requirement / Rating
2.0.0	**Design Features**	Common for both 66KV and 33 KV Lightning Arresters
2.1.0	Application	To be used for protection of transformers, circuit breakers and other sub-station equipment against lightning and switching surges.
2.2.0	Type of Lightning Arrester	Gap-less metal oxide type (ZnO Type).
2.3.0	Pressure relief device	Pressure relief device of class 40 KA shall be provided.
2.4.0	Accessories	Refer Annexure-A : Scope of Supply.
2.5.0	Mounting	LA mounting vertically on steel structures with insulating bases. Surge counters in weather proof enclosures suitable for mounting on structure of lightning arrester.
2.6.0	Line side Terminal Connectors	Suitable for ACSR Zebra/ Goat conductor (Refer GTP)
2.7.0	Ground Terminal Connectors	Suitable for 50x6 mm GS flat
2.8.0	Surge Counter	Non-resettable type
2.9.0	Name plate Marking	Following minimum information must be marked – i) Name of the manufacturer ii) Type and serial No. iii) Model No. iv) Rated voltage v) Max. continuous Operating Voltage vi) Nominal discharge current vii) Pr. Relief Class viii) Identification mark on each separately housed unit to enable it to be replaced in correct position after the multiunit arrester has been dismantled.
3.0.0	**Approved Make of Components**	Common for both 66KV and 33 KV Lightning Arresters
3.1.0	Insulators	JSI / WSI/ BHEL/ Modern/ Saravana

Sr. No.	Description	Requirement / Rating
4.0.0	**Testing & Inspection**	
4.1.0	Internal Test	Manufacturer shall carry out comprehensive inspection and testing during manufacture of the equipment.
4.2.0	Type test	The product must be of type tested quality. Type test reports shall be submitted for the type, size & rating of equipment offered along with bid. If the manufacturer's lab is accredited by govt./ authorised body then it shall be acceptable for type testing.
4.3.0	Routine test	As per relevant IS / IEC.
4.4.0	Acceptance test	As per relevant IS / IEC.
4.5.0	Test Witness	
4.5.1		The Buyer reserves the right to witness all tests specified on completed product.
4.5.2		The Buyer reserves the right to inspect the product at the Sellers works at any time prior to dispatch, to verify compliance with the specifications.
4.5.3		In-process and final inspection call intimation shall be given in advance to purchaser.
4.6.0	Tests on fitting and Accessories	As per Manufacturer's Standards and relevant IS / IEC.
5.0.0	**Drawing, Data & Manuals**	
5.1.0	To be submitted along with bid	The seller has to submit :
	i)	Tentative GA / cross sectional drawing of product showing all the views / sections.
	ii)	Detailed reference list of customers already using the offered product during the last 5 years with particular emphasis on units of similar design and rating.
	iii)	Completely filled GTP
	iv)	Deviations from this specification. Only deviations approved in writing before award of contract shall be accepted.
	v)	Details of manufacturer's quality assurance standards and program and ISO 9000 series or equivalent national certification.

Sr. No.	Description	Requirement / Rating
	vi)	Type test reports shall be submitted for the type, size & rating of product / equipment offered along with bid. In case the type test report for identical product is not available then type test report of nearby size/ rating shall be submitted for review. They shall be considered valid for 5 years from date of test performed on product /equipment.
	vii)	Complete product catalogue and Manual along with the bid.
	viii)	Recommended spare parts and consumable items for five years of operation with prices and spare parts catalogue with price list for future requirements
	ix)	Bill of material with make, model & quantity of items.
5.2.0	To be submitted after award of contract	The seller has to submit : for buyer's Approval (A) / Reference (R)
	i)	Program for production and testing (A)
	ii)	Guaranteed Technical Particulars (A)
	iii)	Calculations to substantiate choice of electrical, structural, mechanical component size / ratings (A)
	iv)	a) Detailed dimension drawing for all components, ge b) Drawings of major components (A) c) Rating and diagram plate (R)
	v)	Detailed loading drawing to enable the buyer to design and construct foundations (as applicable) (R)
	vi)	Transport / Shipping dimensions with weights (R)
	vii)	Detailed Bill of Materials for all fittings and accessories with their make, model & tag no. etc. (A)
	viii)	Detailed installation and commissioning instructions (R)
	ix)	Quality plan (A)
5.3.0	Submittals required prior to dispatch	The seller has to submit :
	i)	Inspection and test reports, carried out in manufacturer's works (R)
	ii)	Test certificates of all bought out items
	iii)	Operation and maintenance Instruction as well as trouble shooting charts/ manuals
5.4.0	Drawing and document sizes	Standard size paper A0, A1, A2, A3, A4
5.5.0	No of drgs. / Documents required at different stages	As per Annexure- A

Sr. No.	Description	Requirement / Rating
6.0.0	**Packing**	
6.1.0	Packing Protection	Against corrosion, dampness, heavy rains, breakage and vibration
6.2.0	Packing for accessories and spares	Robust wooden non returnable packing case with all the above protection & identification Label
6.3.0	Packing Identification Label	In each packing case, following details are required :
	i)	Individual serial number
	ii)	Purchaser's name
	iii)	PO number (along with SAP item code, if any) & date
	iv)	Equipment Tag no. (if any)
	v)	Destination
	vi)	Manufacturer / Supplier's name
	vii)	Address of Manufacturer / Supplier / it's agent
	viii)	Description and Quantity
	ix)	Country of origin
	x)	Month & year of Manufacturing
	xi)	Case measurements
	xii)	Gross and net weights in kilograms
	xiii)	All necessary slinging and stacking instructions
7.0.0	**Shipping, Handling & Storage**	
7.1.0	Shipping Information	The seller shall give complete shipping information concerning weight, size etc. of each package.
7.2.0	Shipping Constraints	The seller shall ascertain at an early date before the commencement of manufacture, any transport limitations such as weights, dimensions, road culverts, overhead lines, free access etc. from the manufacturing plant to the project site. Bidder shall furnish the confirmation that the proposed packages can be safely transported, as normal or oversize packages, upto the site. Any modifications required in the infrastructure and cost thereof in this connection shall be brought to the notice of the Purchaser.
7.3.0	Transit Damage	The seller shall be responsible for any transit damage due to improper packing.
7.4.0	Handling & Storage	Manufacturer's instructions shall be followed. Detail handling & storage instruction sheet / manual needs to be furnished before commencement of supply.

Sr. No.	Description	Requirement / Rating
8.0.0	**Quality Assurance**	
8.1.0	Vendor quality plan	To be submitted for purchaser approval
8.2.0	Inspection points	To be mutually identified & agreed in quality plan
9.0.0	**Progress Reporting**	
9.1.0	Outline Document	To be submitted for purchaser approval for outline of production, inspection, testing, inspection, packing, dispatch, documentation program
9.2.0	Detailed Progress report	To be submitted to Purchaser once a month containing
	i)	Progress on material procurement
	ii)	Progress on fabrication (As applicable)
	iii)	Progress on assembly (As applicable)
	iv)	Progress on internal stage inspection
	v)	Reason for any delay in total program
	vi)	Details of test failures if any in manufacturing stages
	vii)	Progress on final box up
	viii)	Constraints / Forward path
10.0.0	**Deviations**	
	i)	Deviations from this Specification are only acceptable where the Seller has listed in his quotation the requirements he can't or does not wish to comply with and the buyer has accepted in writing the deviations before the order is placed.
	ii)	In the absence of a list of deviations, it will be assumed by the Buyer that the Seller complies fully with this specification.

Annexure – A

1.0 Scope

Sr. No.	Description	Requirement / Rating
1.0.0	**Scope**	
1.1.0	Main Equipment	Design, manufacture, assembly & testing at manufacturer's works before dispatch, packing & delivery of Lightning Arresters rated up to 66 kV.
1.2.0	Accessories	
	i)	Supporting insulators for LA.
	ii)	Line terminal connectors.
	iii)	Surge counter with leakage current ammeter.
	iv)	Grounding terminal bracket
	v)	Necessary flanges alongwith all stainless steel hardware like nut bolts/ washers etc. for mounting of LA & surge Counter
	vi)	Suitably sized Cu flat or insulated copper cable for connection between LA and surge counter
	vii)	Any other item necessary or usual for efficient performance and satisfactory maintenance under the various operating and atmospheric conditions
1.3.0	Documentation	Submission of all drawings & documents pertaining to the equipment.
1.4.0	Site Supervision	Supervision of testing & commissioning of equipment at site.
1.5.0	Bill of Materials	Complete bill of materials shall be submitted in the following format.

Sr. No.	Purchaser Equipment Tag No. / Sap Code	Equipment Description	Location / Substation Name	Unit	Quantity
			e.g. Santacruz	Nos.	e.g. 1
			e.g. Alaknanda	Nos.	e.g. 6

2.0.0 Document Submission

Submission of drawings, calculations, catalogues, manuals, test reports shall be as follows :

Item Description	Along with offer	For Approval after award of contract	Final after approval	Remarks
Drawings	3 copies (Typical drgs)	4 copies + 1 Soft Copy	6 copies + 1 soft copy in CD	See Clause 5.0.0 for various drawings required
Calculations	3 copies (Typical)	4 copies + 1 Soft Copy	6 copies + 1 soft copy in CD	See Clause 5.0.0 for details
Catalogues	1 copy		6 copies + 1 soft copy in CD	
Instruction manual	1 copy		6 copies + 1 soft copy in CD	
Test Report	2 copies		6 copies + 1 soft copy in CD	Type test and routine test reports

3.0.0 Delivery Schedule

Sr. No.	Description	Requirement / Rating
i)	Delivery period start date	From date of purchase order
ii)	Delivery period end date	As agreed with supplier
iii)	Material dispatch clearance	After inspection by purchaser

Annexure – B

Ambient Conditions :

A) Mumbai

a)	Average grade atmosphere	Heavily polluted , salt Laden, dusty, humid with possibility of condensation
b)	Maximum altitude above sea level	1000 M
c)	Ambient Air temperature	Highest 45 deg C, Average 35 deg C
d)	Minimum ambient air temperature	20 deg C
e)	Relative Humidity	100 % Max
f)	Thermal Resistivity of Soil	150 Deg. C cm/W
g)	Seismic Zone	3
h)	Rainfall	3000 mm concentrated in four months

B) Delhi

a)	Average grade atmosphere	Heavily polluted, dry
b)	Maximum altitude above sea level	1000 M
c)	Ambient Air temperature	Highest 50 deg C, Average 40 deg C
d)	Minimum ambient air temperature	0 Deg C
e)	Relative Humidity	100 % Max
f)	Thermal Resistivity of Soil	150 Deg. C cm/W
g)	Seismic Zone	4
h)	Rainfall	750 mm concentrated in four months

Annexure – C1

Guaranteed Tech. Particulars for 66KV Lightning Arrester

Sr. No.	Description	Data By Purchaser	Data by Supplier
1	Name of manufacturer		
2	Type	Gapless, ZnO type, single pole, heavy duty, station class, pedestal mounted	
3	Model		
4	No. of units.		
5	Installation	Outdoor	
6	Application	Protection of Transformers, circuit breakers, lines and other outdoor S/S equipment.	
7	LA connection to system	Phase to earth	
8	Type of Conductor	ACSR Zebra / Goat	
9	Construction	Single Phase	
10	Rated voltage of arrester (KVrms)	60 KV	
11	Nominal discharge current (Amps) (8x20 micro sec. wave) peak value	10KA	
12	System Particulars		
i)	Highest System Voltage	72.5 KV	
ii)	Frequency	50HZ ± 5%	
iii)	System neutral	Solidly earthed	
iv)	Max. value of temporary over voltage & its max. duration		
	- Insulation level of equipment to be protected	325 KVp	
	- System short circuit level	31.5KA for 3 seconds.	
13	Maximum continuous operating voltage (MCOV)	52KV	
14	Impulse withstand current	100KAp	
15	Long Duration discharge class	3	
16	Minimum single impulse energy capability		
17	Maximum residual voltage at switching impulse current of 1KAp (30/60 micro sec. wave)	136 KVp	

Sr. No.	Description	Data By Purchaser	Data by Supplier
18	Max. residual voltage (1x20 micro sec. wave)		
i)	At 05 KAp		
ii)	At 10 KAp		
iii)	At 20 KAp		
19	Minimum creepage distance	31 mm/KV	
20	Pressure relief class	40KA	
21	Reference current (mA)		
22	Leakage current at COV (mA)		
	Resistive		
	Capacitive		
23	Dry and wet power frequency withstand voltage of arrester insulation (KVrms)		
24	Virtual steepness for front of wave for above (KV/micro sec.)		
25	Ratio of system voltage withstand level to protection level of surge arrester		
26	High current impulse withstand 4/10 micro second peak value (KV)		
27	Long duration current Impulse		
i)	Current peak.		
ii)	Virtual duration.		
28	Temporary Over Voltage Capacity (KVp)		
i)	At 0.1 Sec.		
ii)	At 1.0 Sec.		
iii)	At 10.0 Sec.		
iv)	At 100.0 Sec.		
29	Weight of complete unit (Kg)		
30	Height of complete unit from base to the line side (mm)		
31	Minimum recommended spacing between arresters Centro to Centro (mm)		
32	Clearance required from ground equipment at various heights of arresters unit (mm)		

Sr. No.	Description	Data By Purchaser	Data by Supplier
33	Earthing arrangement provided for earthing side of arresters.		
34	Mounting flanges dimensional details.		
35	Type and range of milli-ampere meter.		
36	Type and specifications of the surge connecters.		
37	Surge counter min. current for recording a lightning stroke	200 Amp	
38	Surge counter max. disch. Current withstand	100KA peak for 4/10 wave shape.	
39	Range of continuous leakage current at rated voltage with variation due to change in temperature & frequency		
40	Size and length of flexible Cu cable for connection between LA & surge counter		
41	Voltage time curve for thermal stability of LA after a stroke	To be provided	
42	Paint shade of surge counter housing	Polyurethane, 692 of IS-5	

Annexure – C2

Guaranteed Tech. Particulars for 33KV Lightning Arrester

Sr. No.	Description	Data By Purchaser	Data by Supplier
1	Name of manufacturer		
2	Type	Gapless, ZnO type, single pole, heavy duty, station class, pedestal mounted	
3	Model		
4	No. of units.		
5	Installation	Outdoor	
6	Application	Protection of Transformers, circuit breakers, lines and other outdoor S/S equipment.	
7	LA connection to system	Phase to earth	
8	Type of Conductor	ACSR Zebra / Goat	
9	Construction	Single Phase	
10	Rated voltage of arrester (KVrms)	30 KV	
11	Nominal discharge current (Amps) (8x20 micro sec. wave) peak value	10KA	
12	System Particulars		
i)	Highest System Voltage	36 KV	
ii)	Frequency	50HZ ± 5%	
iii)	System neutral	Solidly earthed	
iv)	Max. value of temporary over voltage & its max. duration		
	- Insulation level of equipment to be protected	170 KVp	
	- System short circuit level	26.3KA for 3 seconds.	
13	Maximum continuous operating voltage (MCOV)	25KV	
14	Impulse withstand current	100KAp	
15	Long Duration discharge class	3	
16	Minimum single impulse energy capability		
17	Maximum residual voltage at switching impulse current of 1KAp (30/60 micro sec. wave)	70 KVp	

Sr. No.	Description	Data By Purchaser	Data by Supplier
18	Max. residual voltage (1x20 micro sec. wave)		
i)	At 05 KAp		
ii)	At 10 KAp		
iii)	At 20 KAp		
19	Minimum creepage distance	31 mm/KV	
20	Pressure relief class	40KA	
21	Reference current (mA)		
22	Leakage current at COV (mA)		
	Resistive		
	Capacitive		
23	Dry and wet power frequency withstand voltage of arrester insulation (KVrms)		
24	Virtual steepness for front of wave for above (KV/micro sec.)		
25	Ratio of system voltage withstand level to protection level of surge arrester		
26	High current impulse withstand 4/10 micro second peak value (KV)		
27	Long duration current Impulse		
i)	Current peak.		
ii)	Virtual duration.		
28	Temporary Over Voltage Capacity (KVp)		
i)	At 0.1 Sec.		
ii)	At 1.0 Sec.		
iii)	At 10.0 Sec.		
iv)	At 100.0 Sec.		
29	Weight of complete unit (Kg)		
30	Height of complete unit from base to the line side (mm)		
31	Minimum recommended spacing between arresters Centro to Centro (mm)		
32	Clearance required from ground equipment at various heights of arresters unit (mm)		

Sr. No.	Description	Data By Purchaser	Data by Supplier
33	Earthing arrangement provided for earthing side of arresters.		
34	Mounting flanges dimensional details.		
35	Type and range of milli-ampere meter.		
36	Type and specifications of the surge connecters.		
37	Surge counter min. current for recording a lightning stroke	200 Amp	
38	Surge counter max. disch. Current withstand	100KA peak for 4/10 wave shape.	
39	Range of continuous leakage current at rated voltage with variation due to change in temperature & frequency		
40	Size and length of flexible Cu cable for connection between LA & surge counter		
41	Voltage time curve for thermal stability of LA after a stroke	To be provided	
42	Paint shade of surge counter housing	Polyurethane, 692 of IS-5	

Annexure – D

Recommended spares (Data by supplier)

List of recommended spares shall be submitted as follows –

Sr. No.	Description of spare part	Unit	Quantity
1		Nos.	
2		Nos.	
3			
4			
5			
6			

BSES

Technical Specification

Of

High Mast

Specification no – BSES-TS-307-HIGHMT-R0

Rev:		0
Date:		10 Oct 2025
Prepared by	Alok Mandal	
Reviewed by	Uttam Shukla	
Approved by	Deepti Sharma	

1.0 Scope of supply

This specification covers the requirement of design, manufacture and testing of 16M high mast along with accessories and requisite hardware. The scope also includes erection, installation and associated civil work like foundation etc.

2.0 Codes & Standards

All standards, specifications, and codes of practice referred to herein shall be the latest edition including all applicable official amendments and revisions as applicable.

IS: 5	1994	Colour for ready mixed paints and enamels.
IS:694	1990	PVC insulated cables for working voltages upto and including 1100V.
IS:800	1984	Code of practice for general construction in steel.
IS:802	1978 Part-2	Code of practice for use of structural steel in Overhead transmission line towers. Part-2 Fabrication, galvanising, inspection and packing.
IS: 875	1987 Part-3	Code of practice for design loads(other than earthquake) for buildings and structures: Wind loads
IS:2062	1992	Steel for general structural purposes.
IS: 2551	1982	Danger notice plates.
IS:2629	1985	Recommended practice for hot dip galvanising on iron and steel.
IS :2633	1986	Methods for testing uniformity of coating of zinc coated articles.
IS :3961	1967 Part-2	Recommended current ratings for PVC insulated cables. Part-2: PVC insulated and PVC sheathed heavy duty cables.
IS :5133	1969 Part-1	Boxes for enclosure of electrical accessories- Part-1: steel and cast iron boxes.
IS: 5831	1984	PVC insulation and sheath of electric cables.
IS :8130	1984	Conductors for insulated electric cables and flexible cords.
IS :10810	1984	Method of tests for cables.
IS:13703	1993 Part-1	Low voltage fuses for voltages not exceeding 1000V AC or 1500V DC .Part-1:General requirements
IS:13703	1993 Part-2	Low voltage fuses for voltages not exceeding 1000V AC or 1500V DC .Part-2:Supplementary requirements for fuses for industrial applications
BS EN 10-027 (part-1)	1992	Designation systems for steel: steel names, principal symbols
BS EN 10-027 (part-2)	1992	Designation systems for steel: steel numbers
BS 5135		National Electrical Code.
BS-EN 10-027		Indian Electricity rules(relevant safety regulation of CEA) and acts

3.0 Service Conditions

Equipment to be supplied against this specification shall be suitable for satisfactory continuous operation under the following tropical conditions.

Maximum Ambient Temperature (Degree C)	50
Maximum temperature in shade (Degree C)	45
Min. Temperature of Air in Shade (Degree C)	-10
Relative Humidity (Percent)	10 To 100
Maximum annual rain fall (mm)	1450
Maximum Wind pressure (Kg/Sq. M.)	150
Maximum altitude above mean sea level (Meters)	3000
Isoceranic level (days per year)	50
Seismic level (Horizontal Acceleration) Moderately hot and humid tropical climate conducive to rust and fungus growth	0.3g

4.0 Technical Requirement

4.1. Structure

The High mast shall be of continuously tapered, galvanised polygonal cross section, at least 20 sided, presenting a good and pleasing appearance, based on proven In-Tension design, conforming to the standards referred to above, to give an assured performance, and reliable service. The structure shall be suitable for wind loading as per IS - 875 Part -III, 1987.

4.2. Construction

The mast shall be fabricated from special steel plates, conforming to BS-EN10-027, cut and folded to form a polygonal section and telescopically jointed and welded. The welding shall be in accordance with BS-5135. The sections are joined together by slip-stressed-fit method. No site welding shall be done. Only bolted joint shall be done on the mast at the site. The minimum over lap distance shall be 1.5 times the diameter at penetration. The dimensions of the mast shall be decided based on proper design and accordingly design calculations shall be submitted for review / approval.

The mast shall be provided with fully penetrated flange, free from any lamination or incursion. The welded connection of the base flange shall be fully developed to the strength of the entire section. The base flange shall be provided with supplementary gussets between the bolt holes to ensure elimination of helical stress concentration. The entire fabricated mast shall be hot dip galvanised both internally and externally.

4.3. Door Opening

An adequate door opening shall be provided at the base of the mast and the opening shall be such that it permits clear access to equipment like winches, cables, plug and socket, etc. and also facilitate easy removal of the winch. The door opening shall be complete with a close fitting, vandal resistant, weatherproof door, provided with a heavy-duty double internal lock with special paddle key.

4.4. Dynamic Loading for the Mast

The mast structure shall designed as per TR No-7 of Institutions of lightning engineers of UK and shall be suitable to sustain maximum reaction arising from a wind speed as per IS-875 (three second gust), and is measured at a height of 10 meters above ground level.

4.5. Lantern Carriage

A fabricated Lantern Carriage shall be provided for fixing and holding the flood light fittings and control gear boxes. The lantern Carriage shall be of special design and shall be of steel tube construction, the tubes acting as conduits for wires, with holes fully protected by

grommets. (The lantern carriage tube should not be used as conduit. Separate flexible conduits are used from CG Boxes to the Flood Light Fixtures) The Lantern Carriage shall be designed and fabricated to hold the required number of flood light fittings and the control gear boxes, and also have a perfect self balance.

The Lantern Carriage shall be fabricated in two halves and joined by bolted flanges with stainless steel bolts and plastic lock type stainless steel nuts to enable easy installation or removal from the erected mast. The inner lining of the carriage shall be provided with protective PVC arrangement, so that no damage is caused to the surface of the mast during the raising and lowering operation of the carriage. The entire Lantern Carriage is hot dip galvanised after fabrication.

4.6. Junction Box

The junction box shall be cast aluminium or SS, weather proof IP67 junction box. It shall be provided on the Carriage Assembly as required, from which the inter-connections to the designed number of the flood light luminaries and associated control gears fixed on the carriage, is made.

4.7. Raising and lowering mechanism

It will be necessary to lower and raise the Lantern Carriage Assembly to install and maintain the luminaries and lamps. To enable this, a suitable Winch Arrangement shall be provided, with the winch fixed at the base of the mast and the specially designed head frame assembly at the top.

4.8. Winch

The winch shall be of completely self-sustaining type, without the need for brake, shoe, springs or clutches. Each driving spindle of the winch is positively locked when not in use. Individual drum also should be operated for the fine adjustment of lantern carriage. The capacity, operating speed, safe working load, recommended lubrication and serial number of the winch shall be clearly marked on each winch.

The gear ratio of the winch shall be 53 : 1 or as recommended by manufacturer. However, the minimum working load shall not be less than 750 kg. The winch shall be self-lubricating type by means of an oil bath and the oil shall be readily available grades of reputed manufacturers and details of the oil shall be furnished.

The winch drums shall be grooved to ensure perfect seat for stable and tidy rope lay, with no chances of rope slippage. The rope termination in the winch shall be such that distortion or twisting is eliminated and at least 5 to 6 turns of rope remains on the drum even when the

lantern carriage is fully lowered and rested on the rest pads. It should be possible to operate the winch manually by a suitable handle and/or by an external power tool. It would be possible to remove the double drum after dismantling, through the door opening provided at the base of the mast. Also, a winch gearbox for simultaneous and reversible operation of the double drum winch shall be provided as part of the contract.

The winch shall be type tested in a reputed test lab/ Institution and the test certificates shall be furnished before supply of materials. Test certificate shall be furnished by the bidder from the original equipment manufacturer, for each winch in support of the maximum load operated by the winch.

4.9. Head Frame

The head frame, which is to be designed, as a capping unit of the mast, shall be of welded steel construction, galvanised both internally and externally after assembly. The top pulley shall be of appropriate diameter, large enough to accommodate the stainless steel wire ropes and the multi-core electric cable. The pulley block shall be made of corrosion resistant material, and is of the cast Aluminium Alloy (LM-6) or SS. Pulley made of synthetic materials such as Plastic or PVC is not acceptable. Self-lubricating bearings and stainless steel shaft shall be provided to facilitate smooth and maintenance free operation for a long period. The pulley assembly shall be fully protected by a canopy galvanised internally and externally.

Close fitting guides and sleeves shall be provided to ensure that the ropes and cables do not dislodge from their respective position in the grooves. The head frame shall be provided with guides and stops with PVC buffer for docking the lantern carriage.

4.10 Stainless Steel Wire Ropes

The suspension system shall essentially be without any intermediate joint and shall consist of only non-corrodable stainless steel of AISI - 316 or better grade.

The stainless steel wire ropes shall be of 7/19 construction, the central core being of the same material. The overall diameter of the rope shall be more than 6 mm keeping in mind contingency. The breaking load of each rope shall not be less than 2350 kg. The design shall have a factor of safety over 5 for the system at full load. The end constructions of ropes to the winch drum shall be fitted with talurit.

The thimbles are secured on ropes by compression splices. Two continuous lengths of stainless steel wire ropes are used in the system and no intermediate joints are acceptable in view of the required safety. No intermediate joints, either bolted or else, shall be provided on the wire ropes between winch and lantern carriage.

4.11 Electrical System, Cable and Cable Connections

A suitable terminal box shall be provided as part of the supply at the base compartment of the high mast for terminating the incoming cable. The electrical connections from the bottom to the top shall be made by special trailing cable. The cable is EPR insulated and PCP sheathed to get flexibility and endurance. Size of the cable is minimum 5 core 2.5 sq mm copper, in case of failure of any core 2 spare cores shall be available. The cable shall be of reputed make. At the top necessary weatherproof junction box to terminate the trailing cable shall be provided. Connections from the top junction box to the individual luminaries is made by using 3 core 1.5 sq mm flexible PVC cables of reputed make. The system shall have in built facilities for testing the luminaries while in lowered position.

Also, suitable provision shall be made at the base compartment of the mast to facilitate the operation of externally mounted, electrically operated power tool for raising and lowering of the lantern carriage assembly. The trailing cables of the lantern carriage rings shall be terminated by means of specially designed, metal clad, multi pin plug and socket provided in the base compartment to enable easy disconnection when required.

4.12 Power Tool for the Winch

A suitable, high-powered, electrically driven, externally mounted power tool, with manual over ride, together with an operating stand shall be supplied for the raising and lowering of the lantern carriage for maintenance purposes. The speed of the power tool may preferably of slow speed, of 1.5 to 1.8 m/minute, so that vibrations associated with high speed operation are avoided. The power tool shall be single speed, provided with a motor of the required rating, suitable for hand/stand operation. The power tool shall be supplied complete with push button type remote control switch, together with 6 (six) meters of power cable, so that the operations can be carried out from a safe distance of 5 (five) meters. The capacity and speed of the electric motor used in the power tool shall be suitable for the lifting of the design load installed on the lantern carriage.

The power tool stand shall be so designed that it will not only be self-supporting but also aligns the power tool perfectly with respect to the winch spindle during the operations. Also, a handle for the manual operation of the winches in case of problems with the electrically operated tool shall be provided and shall incorporate a torque-limiting device.

A separate torque-limiting device to protect the wire ropes from over stretching shall be provided. It shall be mechanical with suitable load adjusting device. The torque limiter is a requirement as per the relevant standards in view of the overall safety of the system.

4.13 Lightning Finial

One number heavy-duty hot dip galvanised lightning finial shall be provided for each mast. The lightning finial shall be minimum 1.2 m in length and shall be provided at the centre of the head frame. It shall be bolted solidly to the head frame to get a direct conducting path to the earth through the mast. The lightning finial shall not be provided on the lantern carriage under any circumstances in view of safety of the system.

4.14 Aviation Obstruction Lights:

Based on site and project specific requirements, 2 nos. Low Intensity Type-B (as per Table 6.3 of Volume-1, Annexure-14 of ICAO Guideline for Aerodrome Design & Operations) LED type aviation obstruction lights of reliable design and reputed manufacturer shall be provided on top of each mast.

4.15 Earthing Terminals:

Suitable earth terminal pad using twin 12 mm diameter stainless steel bolts shall be provided at a convenient location on the base of the Mast, for lighting and electrical earthing of the mast.

4.16 Luminaries:

The non-integral floodlight luminaries with LED Lamp shall be provided with each mast. Optical compartment of the luminary shall be IP 66 and control gear compartment shall be IP 54 or better. Bajaj, Crompton and Philips make luminaries are approved. Detailed technical brochure shall be provided along with the bid.

4.17 Feeder Pillar:

Feeder pillar required for feeding power to the Lighting mast shall also be supplied along with the mast and its accessories. The feeder pillar is fed from the main switchgear / main lighting distribution board. The outgoings of this feeder pillar are connected to the MCBs in the mast. The feeder pillar shall be FLP or WP IP 54 with rain protection canopy in galvanised CRCA sheet or cast Aluminium body (for FLP) and finished with two coats of epoxy primer and grey enamel paint of shade 631 of IS-5. The feeder Pillar shall comprise of incoming 32 Amp TPN switch, HRC fuses, outgoing 25 Amp SP MCB, Time switch and contactor for automatic on & off of circuit with manual override, TP MCB for power tool contactors for reversing the motor and overload Protection of motor. Feeder pillar shall be mounted on suitable foundation near to the mast.

5.0 Tests

All type test certificates for the tests listed in the relevant standards, conducted on identical masts shall be submitted to BSES for approval. Routine tests & acceptance tests as per relevant IS shall be conducted as per approved Quality Plan.

6.0 Marking / Name Plate

The high mast shall be provided with "BSES" insignia with anodized aluminium plate. Anodized plate showing 24X7 customer care number shall also be provided. Name plate shall include manufacturer name, date of manufacturing, warranty period and other details as per standards.

Annexure A: Guaranteed Technical Parameters

Sl. No.	Particulars	Data by purchaser			Data by seller
1	**Name and address of manufacturer**				
2	**Overall height of high mast**	12 mtrs	16 mtrs	20 mtrs	
2.1	Make				
2.2	Material of construction of shaft	Grade S355 J O as per BSEN 10025 or equivalent			
2.2	Cross section of mast	20 sided, regular continuously tapered polygonal			
2.3	Number of sections	One	Two	Two	
2.3	Minimum thickness of shaft (mm)	4 mm	Bottom section: 5 mm Top section: 4mm	Bottom section: 5 mm Top section: 4mm	
2.4	Length of individual section (mm)	12000 mm	10900mm / 5850mm	10375mm / 10375mm	
2.5	Minimum Base and top diameter	340mm (A/F) and 150 mm (A/F)	450mm (A/F) and 150 mm (A/F)	500mm (A/F) and 150 mm (A/F)	
2.6	Type of joints	No site joints, mast should be delivered in a single section	Telescopic slip joint, stress fitted	Telescopic slip joint, stress fitted	
2.7	Length of overlap	N/A	750mm	750mm	
2.8	Metal protection treatment of fabricated mast section	Hot dip galvanization through single dipping process			
2.9	Thickness of	Minimum 85 microns as per IS:2629			

Sl. No.	Particulars	Data by purchaser			Data by seller
	galvanizations				
2.10	Size of opening door at base	Approx. 250 X 1200 mm			
2.11	Type of locking arrangement and door construction	Anti vandal type			
2.12	Details of struck board inside	Insulated base board			
2.13	Size , material and thickness of cable termination box				
2.14	Minimum size of base plate diameter	540 mm (min.)	650 mm (min.)	680 mm (min.)	
2.15	Minimum size of base plate thickness	25 mm thick			
2.16	Minimum size of anchor plate thickness	8 mm			
2.17	Details of template	Same as anchor plate but 2 mm thick			
3	**Dynamic loading as prevailing at site**				
3.1	maximum wind pressure (basic wind speed)	47m/s as per IS:875, p-3			
3.2	Maximum gust speed time	3 seconds			
3.3	Height above ground level at which wind speed is consider	10 mtrs			
3.4	Factor of safety for wind load	1.25			
3.5	Factor of safety for other load	1.15			
3.6	Application standard for mast design	Technical report #7:2000 by ILE, UK			
4	**Foundation details**				
4.1	Type of foundation	Open raft shallow footing or pile as applicable			
4.2	Size of foundation	as per design conforming to IS:456			
4.3	Design safety factor	2			
4.4	Considered wind speed	180 m /s			
4.5	Depth of foundation	As per requirement of design			
4.6	Average soil bearing capacity	As per site condition			
4.7	Numbers of foundation bolts	6 nos	8 nos		
4.8	PCD of foundation bolts	440 mm (min.)	550 mm (min.)	600 mm (min.)	
4.9	Type of foundation bolt	Tor steel			
4.10	Bolt diameter / length	25mm dia / 750 mm	32mm dia / 1325 mm	40mm dia / 1375 mm	
5	**Lantern Carriage**				

Sl. No.	Particulars	Data by purchaser			Data by seller
5.1	Diameter of Carriage Ring	Suitable to carry up to 4 nos. floodlights	1200 mm	1200 mm	
5.2	Construction	MS Channels / Tube, Hot dip galvanized	Channels 75X40X4mm thick	Channels 75X40X4mm thick	
5.3	Number of joints	As per manufacturer's standard design (2 segments as per Cl no.4.5)	3 segments (2 segments as per Cl no.4.5)	3 segments (2 segments as per Cl no.4.5)	
5.4	Buffer arrangement between carriage and mast	Rubber padded guide ring provided			
5.5	Load carrying capacity	500 kg	750 kg	750 kg	
5.6	Total weight of assembly with fitting	as per design			
6	**Winch**				
6.1	Make of winch				
6.2	Number of drums/ winch	Double drum			
6.5	Gear Ratio				
6.3	Capacity	SWL 500 kg	SWL 750 kg		
6.4	Method of operation	Manual and Inbuilt power tool			
6.6	Operating speed				
6.7	Lubricant Arrangement	Permanent oil bath			
6.8	Type of lubricant				
6.9	Material of construction of gear	Phosphorus Bronze / EN 19			
6.10	Tested load per drum	500 kg	750 kg		
6.11	SWL of winch at 410 rpm	500 kg SWL	750 kg SWL		
7	**Wire rope**				
7.1	Make				
7.2	Grade	AISI 316			
7.3	Number of ropes	3 nos / 5mm (three wire rope)	3 nos / 6 mm (three wire rope)		
7.4	Construction	7./19			
7.5	Diameter of Wire rope	5mm	6mm		
7.6	Factor of safety	Not less than 5	Not less than 6		
7.7	Breaking capacity	Minimum 2350Kgs. X 2			
8	**Cable**				

Sl. No.	Particulars	Data by purchaser	Data by seller
8.1	Type	EPR coated PCP sheathed	
8.2	Material	Multicore copper conductor	
8.3	Make	Finolex, torrent, Polycab, KEI, Havells	
8.4	Current carrying capacity	As per IS 9968 (Part - 1), 1998	
8.5	conductor size	5CX2.5 sqmm.	
9	**Torque limiter**		
9.1	Lifting capacity	Upto 500 kg | Upto 750 kg	
9.2	Adjustable / non adjustable	Adjustable	
10	**Lantern and Fixture**		
10.1	Type Of Lamp	LED, Asymetrical IP65 fitting	
10.1.1	Wattage	400W	
10.1.2	Make		
10.1.3	Model Number		
10.2	Housing	Single piece gravity die-cast	
10.2.1	Material	Aluminium alloy: LM6	
10.2.2	Ingress protection		
10.2.3	For optical compartment	IP:65/IP:66	
10.2.4	For control gear compartment	IP:54 or better	
10.2.5	Dimensions of lantern	As per design standard	
10.2.6	Weight of lantern with control gear	As per design standard	
10.3	Lamp Cover	Perspex/Toughened glass	
10.3.1	Toughened glass		
10.3.2	Class of glass	AA/SSQ	
10.3.3	Nominal thickness	5mm	
10.3.4	Perspex thickness	2.5mm+/-0.4 mm	
10.4	Material of gasket	Slicon Rubber/ Neoprene	
10.5	Lamp holder	Screw type/three pin type	
10.5.1	Material	Porcelain	
10.6	Ballast	Conventional/Open type/ VI/VPI	
10.6.1	Ballast voltage	240V AC	
10.6.2	Minimum open circuit voltage	198V	
10.6.3	Frequency	50 Hz	
10.6.4	Current output(A), at rated voltage		
10.6.5	Voltage to current ratio ( ) +/-0.5%		
10.6.6	Watt loss (W)	To be specified	
10.7	Power factor of lantern	More than 0.95 lag	
10.7.1	Value of capacitor	To be specified	
10.8	Igniter	Three wire	
10.9	Reflector	Anodised/POT	

Sl. No.	Particulars	Data by purchaser			Data by seller
10.9.1	Angle of tilt of lamp	To be specified			
10.9.2	Downward light output ratio	More than 70%			
10.9.3	Angle of throw	As per clause 5.12.5			
10.9.4	Angle of spread	As per clause 5.12.6			
10.9.5	Luminous intensity in C = 0° plane at γ = 90°	Less than 10 Cd/klm			
10.9.6	Luminous intensity in C = 0° plane at γ = 80°	Less than 30 Cd/klm			
10.10	Make of fixture	Bajaj, GE, Philips and CGL			
10.10.1	Nos of fixture provided with high mast	4	5	6	
10.10.2	Type of fixture	Weather proof			
11	**Others**				
11.1	Make of 24 hour Differential Timer Switch	Legrand/ GE/ Schnider/ L&T			
11.2	Make of 32A TPN MCB	GE/ Hager/ Legrand/ Schnider			
11.3	Make of 32A Contactor	L&T/ Schnider/ GE			
11.4	Earth pit	Two numbers of treated earth pit with each mast			
12	GTP and Drawing Submitted	Yes/No			
13	Type Tests Submitted	Yes/ No			
14	Technical Brochure of luminaries submitted	YES / NO			
15	Operation and maintenance manual submitted	YES / NO			

BSES

Technical Specification

Of

Outdoor Switchyard Materials

Specification no – BSES-TS-316-SYDMT-R0

Rev:		1
Date:		19 Nov 2025
Prepared by	Alok Mandal	
Reviewed by	Uttam Shukla	
Approved by	Deepti Sharma	

Technical Specification Outdoor Switchyard Material

1.0 INTENT OF SPECIFICATION

1.1 This specification is intended to cover the design, manufacture, assembly, testing at manufacturer's works, supply & delivery, properly packed for transport F.O.R site of 66KV Outdoor Switchyard Material and Hardware complete with all accessories for efficient and trouble free operation.

1.2 In the event of any discrepancy between listed documents, the stipulation of this specification shall govern.

1.3 The specification shall be read and constructed in conjunction with other sections of bidding document.

2.0 SCOPE OF WORK

2.1 **Scope of Supply**

Type, rating, connections etc. of the materials shall be as detailed in the drawings and annexure. The materials shall be furnished in strict compliance with the same.

2.2 Following materials and hardware's are to be furnished:

a) ACSR ZEBRA Conductor
b) Disc Insulator & Post Insulators
c) Conductor Spacers, Clamps, Connectors.

Any material or accessory, which may not have been specifically mentioned but which is usual and / or necessary shall be supplied free of cost to the Owner.

PG Clamps for ACSR Conductors shall not be acceptable. However, C-Wedge Connector can be offered in place of PG Clamp.

3.0 GENERAL REQUIREMENTS

3.1 **Codes and Standards**

i) All equipment and materials shall be designed, manufactured and tested in accordance with the latest applicable Indian Standards (IS) & IEC Standard except where modified and / or supplemented by this specification.

ii) Equipment and material conforming to any other standard, which ensures equal or better quality, may be accepted. In such cases, copies of the English version of the standard adopted shall be submitted along with the bid.

iii) The electrical installation shall meet the requirements of Indian Electricity Rules as amended upto date and relevant IS Codes of Practice. In addition other rules or regulations applicable to the work followed. In case of any discrepancy, the more restrictive rule shall be binding.

4.0 DESIGN CRITERIA

4.1 All the ACSR conductors, disc and string insulators, clamps & connectors, hardware's etc. will be used in extra high voltage system having characteristics as listed in the annexure.

4.2 All equipments, conductors, hardware's, insulators & clamps etc. will be installed outdoor in a hot, humid & tropical atmosphere.

4.3 The maximum temperature in any part of the clamps, connectors, conductors etc at specified rating shall not exceed the permissible limit as stipulated in the relevant standards.

4.4 All equipments, conductors, clamps, connectors, insulators etc shall be capable of withstanding the dynamic & thermal stresses of maximum short circuit current without any damages or deterioration.

4.5 In order to avoid concentration of stresses, all sharp edges of clamps, connectors etc. shall be rounded off.

4.6 Bi-metallic connectors shall be used for any connection between dissimilar materials.

5.0 SPECIFIC REQUIREMENT

5.1 **Equipment & Materials**

i) Equipment & material shall comply with description, rating etc. as detailed in this specification and annexure.

ii) All accessories, fittings, supports, bolts etc. which form part of the equipment or which are necessary for safe and satisfactory installation and operation of the equipment shall be furnished.

iii) All parts shall be made accurately to standard gauges so as to facilitate replacement and repair. All corresponding parts of similar equipment shall be interchangeable.

iv) After the treatment of steel surfaces damaged during transit sufficient quantity of anti-corrosive paint shall be applied and subsequently finished with two coats of final paint of approved shade.

5.2 **ACSR Conductor**

i) The Aluminum Standard conductor and steel reinforced shall have the technical parameters matching with the requirements given in Annexure. ACSR conductors shall conform to the latest revision of IS-398.

ii) The material for ACSR conductor shall conform to the following:

Aluminum

The Aluminum strands shall be hard drawn from electrolytic Aluminium rods having purity not less than 99.5% and a copper content not exceeding 0.04%.

Steel

The steel wire strands shall be drawn from high carbon steel wire rods and shall conform to the following chemical composition:

Element -% Composition

Carbon - 0.50 to 0.85 Manganese - 0.50 to 1.10 Phosphorous -not more than 0.035 Sulphur -not more than 0.045 Silicon - 0.10 to 0.35

Zinc

The zinc used for galvanizing shall be electrolytic High Grade Zinc of 99.95% purity. It shall conform to and satisfy all the requirements of IS: 209-1979.

5.3 Clamps and connectors

i) All clamps, connectors and hardware's shall be designed manufactured and tested as per relevant standards.

ii) All clamps & connectors for connection with ACSR conductors shall have high tensile Aluminum alloy grade A6 body. U- Bolt and nut for the clamp shall be made of non-magnetic material e.g. chromium steel.

iii) Bolt, nut, washer, shackle etc. required for other purpose shall be of forged steel with adequate strength and the surface shall be so protected as to offer maximum resistance to corrosion. Malleable iron wherever used for any part shall be of best quality and shall correspond to latest amendments of relevant IS.

iv) Various fittings & accessories of the clamps & connectors shall be so designed as to eliminate sharp edges & maintain bright smooth surface. All bolts, nuts, rivets etc. shall have round profiles.

5.4 **Disc Insulator**

i) All disc insulators shall be dimensioned appropriately so as to have the required Electro- Mechanical strength for EHV outdoor duties.

ii) Suspension and tension insulators shall be wet process porcelain with ball and socket connection. Glazing of the porcelain shall be uniform brown colour, free from blisters, burrs and other similar defects. Insulators shall be interchangeable and shall be suitable for forming either suspension or strain strings. Each insulator shall have rated strength markings on porcelain printed and applied before firing.

iii) When operating at normal rated voltage there shall be no electric discharge between conductor and insulator which would cause corrosion or injury to conductors or insulators by the formation of substances due to chemical action. No radio interference shall be caused when operating at normal rated voltage.

iv) Insulating shall be co-ordinated with basis impulse level of the system. The creepage distance shall correspond to very heavily polluted atmosphere (31mm/KV)

v) Porcelain used in insulator manufacture shall be homogeneous, free from lamination, cavities and other flaws or imperfection that might affect the mechanical or dielectric quality and shall be thoroughly vitrified, tough and impervious to moisture.

vi) The design of the insulator shall be such that stresses due to expansion and contraction in any part of the insulator shall not lead to deterioration. All ferrous parts shall be hot dip galvanized in accordance with the latest edition of IS: 209. The zinc coating shall be uniform, adherent, smooth, reasonably bright, continuous and free from imperfection such as flux, ash, rust stains bulky white deposits and blisters.

vii) Bidder shall make available data on the essential features of design including the method of assembly of discs and metal parts, number of discs per insulators, the manner in which mechanical stresses are transmitted through discs to adjacent parts, provision for meeting expansion stresses, results of corona and thermal shock tests, recommended working strength and any special design or arrangement employed to increase life under service conditions.

viii) Insulator hardware shall be of forged steel. Malleable cast iron shall not be accepted except for insulator disc cap. The surface of hardware must be clean, smooth, without cuts, abrasion or projections. No part shall be subjected to excessive localized pressure. The metal parts shall not produce any noise generating corona under operating conditions.

ix) The insulator hardware assembly and clamps shall be designed for 120KN Tensile load. The clamps shall be designed for 700 Kg tensile load. Earth wire tension clamp shall be designed for 1000 Kg tensile load with a factor of safety of two (2).

x) The tension string assemblies shall be supplied along with suitable turn buckle.

6.0 TESTS

6.1 Routine Tests

i) During manufacture and on completion of all equipment, conductors, insulators, clamps, connectors and accessories shall be routine tested as per applicable standards at manufacture's works.

ii) The suspension and tension strings, insulator discs and hardware shall be subjected to the following, acceptance tests and routine tests:

a) Visual examination
b) Verification of Dimensions as per Cl no. 10.5 of IS: 731
c) Temperature cycle test as per Cl no. 10.6 of IS: 731
d) Puncture test as per Cl no. 10.10 of IS: 731
e) Galvanizing test as per Cl no. 10.12 of IS: 731
f) Mechanical performance test as per IEC-575 Cl. 4
g) Test on locking device for ball & socket coupling as per IEC-372 (2)
h) Porosity test as per Cl no. 10.11 of IS: 731

Acceptance Tests

a) Visual examination as per Cl. 5.10 Of IS: 2468 (Part-1)
b) Verification of Dimensions as per Cl. 5.8 Of IS: 2468 (Part-1)
c) Galvanizing / Electroplating test as per Cl. 5.9 Of IS: 2468 (Part-1)
d) Slip strength test as per Cl. 5.4 Of IS: 2468 (Part-1)
e) Shore hardness test for the Elastomer (if applicable as per the value guaranteed by the Bidder)
f) Mechanical strength test for each component (including grading rings and arcing horns).
g) Test on locking devices for ball and socket coupling as per IEC: 372 (2)

Routine Tests on Disc Insulator / Long rod Insulator

a) Visual Inspection as per Cl No. 10.13 of IS: 731
b) Mechanical Routine Test as per Cl No. 10.14 of IS: 731
c) Electrical Routine Test as per Cl No. 10.15 of IS: 731

Routine Tests on Hardware Fittings

a) Visual examination as per Cl. 5.10 Of IS: 2468 (Part-1)
b) Mechanical strength Test as per Cl. 5.11 Of IS: 2468 (Part-1)

Test during manufacture on all components as applicable on Disc Insulator

a) Chemical analysis of zinc used for galvanizing:

Samples taken from the zinc ingot shall be chemically analyzed as per IS: 209. The purity of zinc shall not be less than 99.95%.

b) Chemical analysis, mechanical hardness tests and magnetic particle inspection for malleable casting:

The chemical analysis, hardness tests and magnetic particle inspection for malleable casting will be as per the internationally recognized procedure for these tests. The sampling will be based on heat number and heat treatment batch

Test during manufacture on all components as applicable on hardware fittings

a) Chemical analysis of zinc used for galvanizing

Samples taken from the zinc ingot shall be chemically analyzed as per IS: 209. The purity of zinc shall not be less than 99.95%.

b) Chemical analysis, mechanical hardness tests and magnetic particle inspection for malleable casting:

The chemical analysis, hardness tests and magnetic particle inspection for malleable casting will be as per the internationally recognized procedure for these tests. The sampling will be based on heat number and heat treatment batch

c) Chemical analysis, mechanical hardness tests and magnetic particle inspection for fabricated hardware.

The chemical analysis, hardness tests and magnetic particle inspection for fabricated hardware will be as per the internationally recognized procedure for these tests. The sampling will be based on heat number and heat treatment batch.

iii) The following, acceptance & routine tests and tests during manufacturing shall be carried out on the conductor.

Acceptance Tests

a)	Visual check for joints, scratches etc. and length of conductor	
b)	Dimensional check on steel and Aluminum strands	
c)	Check for lay ratio of various layers	
d)	Galvanizing test on steel strands	

e)	Torsion and Elongation test on steel strands	
f)	Breaking load test on steel and Aluminum strands	
g)	Wrap test on steel and Aluminum strands	IS: 398(Part-V) 1982 Clauses 12.5.2, 12.7 & 12.8
h)	DC resistance test on Aluminum strands	
i)	UTS test on welded joint of Aluminum strands	

NOTE: All the above tests except test mentioned at (i) shall be carried out on Aluminum and steel strands after stranding only

Routine Tests

a) Check to ensure that the joints are as per specification
b) Check that there are no cuts, fins etc. on the strands

iv) The following type, routine & acceptance tests and tests during manufacturing shall be carried out on the earth wire.

Acceptance Tests

a) Visual check for joints, scratches etc. and length of Earth wire
b) Dimensional check
c) Galvanizing test
d) Lay length check
e) Torsion test
f) Elongation test
g) Wrap test
h) DC resistance test : IS: 398 (Part lll) 1976
i) Breaking load test
j) Chemical Analysis of steel

Routine Tests

a) Check that there are no cuts, fins etc. on the strands.
b) Check for correctness of stranding

6.2 **Type Test**

Test certificates for type tests shall be from CPRI/ERDA/NABL approved lab, as stipulated in Indian Standards carried out on similar equipment shall be furnished. If test certificate for any of the type test is not available, the same shall be carried out free of cost from CPRI/ERDA/NABL.

6.3 **Test Witness**

Tests shall be performed in presence of Owner's representative if so desired by the Owner. The contractor shall give at least fifteen (15) days advance notice of the date when the tests are to be carried out.

6.4 **Test Certificates**

i) Certified copies of all tests carried out at works shall be furnished in requisite no. of copies as stated in the condition of contract for approval of the Owner. The certificates shall furnish complete identification, date including serial number of each material and accessory.

ii) Equipment shall be dispatched from works only after receipt of Owner's written approval of shop test reports.

iii) Type test certificate on any equipment, if so desired by the Owner, shall be furnished. Otherwise, the equipment shall have to be type tested, free of charge, to prove the design.

7.0 SPARES

The Bidder shall submit a list of recommended spare parts for three (3) years of satisfactory and trouble free operation, indicating itemized price of each item of the spares.

8.0 DRAWING & DOCUMENTS TO BE FURNISHED

8.1 **To be submitted with each copy of the Bid**

i) Typical general arrangement drawing of the equipment / items.
ii) Technical leaflets on equipment / items expending constructional features.
iii) Type test certificates on similar equipment / items.

8.2 **To be submitted for Approval and Distribution**

i) Dimensional general arrangement drawing showing disposition of various fittings for equipment, accessories, components etc.
ii) Assembly drawing for erection at site with part numbers and schedule of materials.
iii) Type & Routine test certificates
iv) Technical leaflets on equipment / items
v) Back-up calculation for:

a) Selection of equipment / material ratings.
b) Sag-Tension of ACSR.
c) Lighting protection system
d) Selection of rigid bus support spacing.

vi) Any other relevant drawing, documents, calculations and data necessary for satisfactory installation, operation and maintenance.

9.0 DEVIATIONS

Deviation from this specification, if any, shall be clearly brought out in the offer. Unless owner explicitly accepts such deviations, it shall be considered that the offer fully complies with the specification.

Technical Specification Outdoor Switchyard Material

RATINGS & REQUIREMENTS

1.0	**CONDUCTORS**	
1.1	**ACSR Conductor**	
1.1.1	Reference standard :	IS 398
1.1.2	Code Name :	ZEBRA
1.1.3	Type :	ACSR
1.1.4	Overall diameter	28.62mm
1.1.5	Stranding no. of wire and diameter :	54/3.18 (Al) 7/3.18 (St)
	Number of strands Core	1
	1st Layer	6
	2nd Layer	12
	3rd Layer	18
	4th Layer	24
1.1.6	Sectional area of Aluminum :	428.9 sq.mm
1.1.7	Total Sectional area :	484.5 sq.mm
1.1.9	Ultimate Strength (min) :	130.32 KN
1.1.10	Calculated DC resistance at 20 Deg C :	0.06868 ohm/Km

NOTE – The 66KV Main Bus Shall be with TWIN ZEBRA. The equipment bay shall be Single Zebra.

2.0	**GALVANISED STEEL SHIELD WIRE**	
2.1	Reference standard :	IS 398
2.2.	Number of strands	Steel core-1, outer Steel layer-6
2.3	Total sectional area	54.55 sq.mm
2.4	Overall diameter	9.45 mm
2.5	Approximate weight	428 kg/km
2.6	Calculated DC. resistance at 200C	3.37 ohms/km
2.7	Minimum ultimate tensile strength	56 KN
2.8	Direction of lay of outer layer	Right hand
2.9	Minimum tensile strength	110 Kgf/mm2
3.0	**CONNECTORS / CLAMP ASSEMBLY / SPACER**	
3.1	Reference standard :	
3.1.1	Clamp / Connector	IS 5561
3.1.2	Spacer	IS 10162
3.2	Material	Aluminum Alloy A6
3.3	Continuous current carrying capacity (r.m.s) at 50deg C ambient temp.	2000A (min)
3.4	Short time current carrying capacity	31.5KA for 3 sec
3.5	Maximum temperature rise over Ambient of 50	35 deg C

	deg C	
4.0	**INSULATORS**	
4.1	Reference standard	
4.1.1	String Insulators/Insulator fittings	IS 731/ IS 2486
4.1.2	Post Insulators	IS 2544
4.2	Type	Post Insulator-
	Cylindrical solid	
	Core type,	
	Suspension &	
	Tension Insulator	
4.3	Service	Outdoor
4.4	System details	
4.4.1	Voltage	66/72.5KV (Nom/Max)
4.4.2	Nos. of phases	3
4.4.3	Frequency	50Hz
4.4.4	System neutral earthing	Effectively earthed
4.5	Insulation Level	
4.5.1	Dry power frequency withstand	140KV r.m.s
4.5.2	Wet power frequency withstands	140KV r.m.s
4.6	Impulse withstand	325KV
4.7	Creepage	31mm/KV

Bus Post Insulators shall have minimum cantilever strength of 800Kg and minimum torsion moment of 500 Kg.

FITTINGS AND ACCESSORIES OF INSULATORS

Each insulator shall be furnished complete with the fittings and accessories as listed below according to requirement

1. Suspension top fitting
2. Suspension clamp fitting
3. Conductor suspension clamp
4. Tension end fitting
5. Tension (anchor) clamp adopter
6. Conductor tension (anchor) clamp
7. Top metal fitting
8. Bottom metal fitting
9. Nuts, Cotter pin, security clips etc.
10. Forged pin, studs etc.

Other standard accessories which are not specifically mentioned but usually provided with insulator of such type and rating for efficient and trouble free operation.

BSES Rajdhani Power Limited
BSES Bhawan, Nehru Place, New Delhi- 19

TECHNICAL SPECIFICATION

FOR

IT DEVICES FOR GRID COMMUNICATION

DOCUMENT NO.: BRPL-IT-SCADA-0001

Rev.: 02

Prepared by	**Sonia Mittal**	Mittal	**Rev: 1**
Reviewed by	**Uttam Shukla**	Shukla	**Date: 19th Nov., 2025**
Approved by	**Deepti Sharma**	Deepti	

DOCUMENT CONTROL SHEET

DOCUMENT : TECHNICAL SPECIFICATION OF IT DEVICES FOR GRID COMMUNICATION

DOCUMENT NO. : BRPL-IT-SCADA-001

REV. NO. : 02

ENDORSEMENT

Rev No.	Date	Description	GM - IT	HOD - IT
			Prepared by	Approved By
			BSES Rajdhani Power Limited	
02	19.07.2024	3rd	Sonia Mittal (Manager-CES EHV	Abhinav Srivastava HOD – CES EHV
01	02.01.2023	Second issue	Suman Kumar (Asst. V.P.)	Bhuwanesh Dwivedi HOD – SCADA
00	05.02.2019	First issue	Suman Kumar	Mrityunjay Kumar

(This document is a property of BSES Rajdhani Power Limited. This is not transferable and shall not be used for any purpose other than for which it is issued)

Contents

Sr. No.	Clause No.	Description	Page no.
1.	1.0	INTENT OF SPECIFICATION	4
2.	2.0	SCOPE OF SUPPLY AND SERVICES	5
3.	2.1	IT RACK ROOM REQUIREMENT	5
4.	2.2	POWER SUPPLY REQUIREMENTS	5
5.	2.3	EARTHING REQUIREMENTS	5
6.	2.4	IT RACK SPECIFICATION	6
7.	2.5	IT DEVICES	7
8.	3.0	TERMINAL POINTS	7
9.	4.0	EXCLUSIONS	7
10.	5.0	BILL OF QUANTITY AND VENDOR LIST OF EACH ITEM PER RACK FOR EACH GRID	8

POINTS TO BE CONSIDERED DURING DESIGNING OF NEW GRID

1.0 INTENT OF SPECIFICATION

1.1 Tender Specification is intended to cover design, engineering, manufacture, assembly, inspection, shop testing, supply, packing, forwarding to site, unloading, storage and preservation, handling at site, insurance, erection & supervision of erection, pre–commissioning, testing & commissioning, completion of facilities, conducting reliability run tests and performance guarantee tests and handing over the complete IT system to IT department of BSES Rajdhani power limited.

The scope shall also cover the following activities and services in respect of all the equipment and works specified in various sections of this specification.

a) Basic engineering of all equipment and equipment systems.

b) Detailed design of all the equipment and equipment system(s).

c) Providing engineering drawings, data, instruction manuals, as built drawings and other information for owner's review, approval and records.

d) Compliance with statutory requirements and obtaining clearances from statutory authorities, wherever required.

e) Complete manufacturing including shop testing.

f) Packing and transportation from the manufacturer's works to the site including customs clearance, port charges, if any.

g) Receipt, movement to proper storage, storage, preservation and conservation of equipment at the site, movement from storage area to interim/ final foundation location.

h) Supply of spares as per specified list.

i) All items and equipment though not specifically mentioned in the specification, but needed to complete the system to meet the intent of the specification shall be deemed to be included in the scope of the bidder.

It is not the intent to completely specify all details of design and construction, but only to lay down broad sizing and quality criteria for the major equipment and systems and it is expected that the equipments shall conform in all respects to high standards of engineering, design and workmanship and shall be capable of performing in continuous commercial operation up to the contractor's guarantee in a specified manner acceptable to the owner.

2.0 SCOPE OF SUPPLY AND SERVICES

The scope of supply and services shall be complete but not limited to the following:

2.1 IT RACK ROOM REQUIREMENT

2.1.1 Air conditioned room shall be provided for proper functioning of all IT devices. The temperature shall be maintained to 22^0 to 24^0 C

2.1.2 Room size shall be minimum as –

a) Length – 3.5 mtrs
b) Width – 2.5 mtrs.
c) Height – 3 mtrs.

2.1.3 Cable trench/ duct – 200mm wide cable trench/ duct shall be provided below the finished floor for proper routing of cables up to IT rack. 100mm size conduit shall be provided for cable entry from outside of the building to inside cable trench/ duct. The cable trench / duct shall be connected to nearest DCDB for proper power cable routing up to IT rack.

2.1.4 Room door width shall be minimum 4 ft. wide for ease of rack entry and height shall be as per standard norms. Door shall have locking arrangement.

2.1.5 Room's front side shall be provided with glass partition to have the clear view of IT rack from outside the room.

2.1.6 Towers (2nos.) for communication link shall be installed at the roof of the building. The area required for base of the tower shall be 5 ft X 5 ft and the tower load shall be maximum 250 kg. Link shall be delivered by Airtel/ Jio /Sify ISPs.

- ISP based MPLS - 2 Mbps each from Two Vendor for SCADA
- ISP based MPLS 4 Mbps for CCTV survilance

These links delivery shall be directly taken care by owner. Bidder to provide the suitable platform as motioned in the clause for tower erection.

2.2 POWER SUPPLY REQUIREMENTS

2.2.1 Required power supply for communication devices inside the IT rack shall be provided. Two numbers 48V DC power through suitable MCB shall be provided for owner's use in the IT rack this power supply shall be used for communication link's POE devices.

2.2.2 All internal wiring of rack for various ratings of power supply required by other devices i.e switch, routers, cooling fan, light etc shall be provided.

2.2.2 All communication equipments/ devices inside the IT rack shall be on DC power supply.

2.3 EARTHING REQUIREMENTS

2.3.1 Dedicated electronic earthing shall be provided for IT rack and their devices. The earth pit resistance should be between 0.6 ohm to 1 ohm.

2.3.2 Electronic Earthing cable from earth pit to IT rack shall be of minimum 16 sq.mm multi stranded copper cable PVC insulated and internal devices shall be done with minimum of 06 sq.mm multi stranded copper cable PVC insulated.

2.4 IT RACK SPECIFICATION

2.4.1 The design of IT rack and layout of all equipment, terminal blocks etc. shall be based on human engineering considerations, fully keeping in view the convenience of operation and maintenance personnel and shall be subject to Owner's approval during detailed engineering.

2.4.2 Rack shall be free standing/ wall mounting type and have bottom entry for cables to be decided application wise during detailed engineering. The bottom of rack shall be sealed with bottom plate, double compression cable glands and fire proof sealing material to prevent ingress of dust and propagation of fire.

2.4.3 Rack size shall be 12U/15U and made of CRCA sheet with 1.6 mm thickness. The rack shall be of front and back opening with 2 mm thick door frame. Front and back door shall have full length of 3 mm thick glass panel for clear view of inside equipments. Cable gland plate shall be detachable type and of 2mm thickness. Door hinges and locks shall be as per manufacturer standards. Special key type locks are not acceptable. Rack colour shade shall be powder coated RAL 7035.

2.4.4 Two nos. adjustable height tray shall be provided in the rack for routers and ISP devices.

2.4.5 Following are the minimum equipment/ accessories shall be provided in the rack however same shall be decided during detail engineering –

1. DC Power supply converter -

   i) Input source – 48V DC / 220V DC – 1 no. (input supply depends on grid voltage range)

   ii) Output – 12V DC - 2 nos., 48VDC – 2 nos.(for owners use-ISPs), 48V DC/ required supply for router – 1 no. and spare – 1 no.

   iii) Input and output connection shall be of terminal type.

   iv) Input terminals - suitable for 2.5 sq.mm cable

   v) Output terminals - suitable for 1.5 sq.mm cable

2. AC power supply extension board -

   i) Input source – 230V AC – 1 no.

   ii) Output sockets with switch – 230V AC – 5 nos.

3. Rack Fan and filter – size 6"

4. MCB and Terminal blocks – MCB DP type and terminals shall be mounted on DIN rail. Minimum four nos. MCB shall be provided in the rack. One no. for 48 V DC (10A), one no. for 230V AC (10A) and one no. of each rating shall be kept as spare. Terminal blocks shall be fused type and suitable to respective voltage rating and intended cable size mentioned elsewhere in the specification.

2.4.6 All inter panel wiring shall be with FRLS type wires with proper routing inside the cable alley. Cross ferruling shall be provided for easy identification of wires. Cable shall have proper cable tagging.

2.4.7 Panel name plate shall be provided at top portion of front and back doors. It shall be engraved type and made of acrylic plate.

2.5 IT devices

2.5.1 Router – It shall be of industrial grade type. It shall be with 5 years comprehensive warrantee. Brief technical specification is as follows –

a) Make – CISCO / RAD / Fortinet.
b) 2 FO Ports for ISP with Ethernet RJ-45 Convertor
c) 4/6 LAN Ports 100/1000 Mbps
d) Dual Power Supply (DC-DC/ DC-AC) with auto switching
e) 4g/5G SIM based with antenna
f) Built in GPS
g) IP20/40 compliance
h) Industrial Grade - No Fan ,Temperature range upto 70 degree celcius
i) RS-232serial , USB port /ports
j) Supports BGP,OSPF,RIP for MPLS and SDH
k) NMS Monitoring enabled SNMP,Netflow
l) IEC-104 protocol enabled and OT protocol Support
m) 5 Year Onsite warranty with Patch Management and replacement

2.5.2 Switch – Industrial Grade, No Fan, Temp should support upto 70 degree celcius

a) Make – Cisco/Procomm/Siemens
b) 8/16/24 ports, L2 managable
b) Managable and Routed protocol support
c) SNMPV3 support with IP based monitoring. Switch shall be provided with all mounting accessories.

2.5.3 Fiber Device and Cable- LIU 48 Ports *2 , Optical Single mode media convertor *4(DC) , Opical Fiber cable and cable accessories as per requirement Make – D-link .Comspec

The detailed technical specification shall be finalized during detail engineering.

3.0 Terminal Points

3.1 Power supply – From PDB/ DCDB to IT rack including cable supply, erection and termination at both end (PDB/ DCDB and IT rack). PDB/ DCDB details shall be part of Electrical section of technical specification

3.2 LAN cabling – From RTU to IT rack router including CAT 6 cable (armour type) supply, erection and termination at both end (RTU and IT rack). This communication cable shall be of redundant cables.

3.3 SCADA Communication link – Shall be provided by respective ISP upto router WAN ports.

4.0 Exclusions –

4.1 Communication tower/ pole and link.

5.0 Bill of Quantity and vendor list of each item per rack for each grid –

Sr. No.	Item Description	Make / Model No.	Quantity (in nos.)
1	Rack – 12U	Rittal /Pyrotech/Netrack/APC	01
2	Router – Industrial grade	CISCO/ RAD/ Fortinet	01
3	Switch	Cisco/Procomm/Siemens	01
4	Power Supply converter	Meanwell/ Phoenix	01
5	MCB	Havells / Legrand	04
6	Terminal blocks – fused type	Wago/ phoenix	1 lot
7	AC extension board	Havells / Anchor	1
8	Wires for Internal wiring	RR cable, Finolex, Havells	1 lot
9	Spare Terminal blocks with fuses (mounted in the rack)	Wago/ phoenix	20%
10	Terminal fuses of each rating (loose supply)		20%

Technical Specification for

Grid Meters

Specification no – BSES-TS-142-GEM-R0

Rev		**0**
Date		**April 13, 2023**
Prepared BY	Ashish Joshi	
Reviewed BY	Puneet Duggal	
	Vikas Srivastava	
	Lalit Mukhriya	
Approved BY	Gaurav Sharma	
	Manish Jain	

CONTENTS

1. SCOPE....3
2. STANDARDS APPLICABLE....3
3. TECHNICAL REQUIREMENTS AND SPECIFICATION....3
4. CONSTRUCTION OF THE METER....10
5. INFLUENECE QUANTITIES....11
6. COMPONENET SPECIFICATIONS....12
7. SEALING OF THE METER....13
8. CONNECTION DIAGRAM AND TERMINAL MARKING....13
9. GUARANTEE....13
10. TESTS....14
11. MANUFACTURING ACTIVITIVES....14
12. PACKING....15
13. DRAWING & TECHNICAL LEAFLETS....15
14. GENERAL REQUIREMENT FOR MDAS/HES....15
15. AFTER SALES SERVICE....16

1. SCOPE

IEC compliant, Class- 0.2S, Three phase Four wire, 63.5 volts (Phase to Neutral), -/1 Amp and -/5 Amp Static (Electronic), 4 Quadrant Tri-vector Energy Meter and Software for meter reading and analysis.

This specification covers design, manufacturing, testing and supply of high precision 3 phase 4 wire static tri-vector energy meter of accuracy class 0.2s capable of performing functions of energy audit in EHV /sub transmission system and software for meter reading and analysis.

2. STANDARDS APPLICABLE

The meters shall be of class 0.2s class accuracy and shall meet all the requirements specified in standard IEC specifications.

Standard	Details
IS 14697: 1999	Specification for A.C Static Transformer operated Watt Hour & VAR – Hour meters, class 0.2s
CBIP Technical Report No. 325	Specification for A.C. Static Electrical Energy Meters.
IS 15959 (Companion specification)	DLMS Indian Companion Standard – Category 'B' for Ring fencing/Boundary/ABT Metering

3. TECHNICAL REQUIREMENTS AND SPECIFICATION

Meters are required for installation substations, the basic system parameters wherein these meters will be installed shall be as under: -

3.1 Secondary voltage: 63.5 V (P-N) for 3 phase 4 wire Secondary current: -/1 A or -/5 A (as per tender requirement)

3.2 The meter shall be designed for -/1 A or -/5 A (as per tender requirement) CT secondary and 200% overloading.

3.3 The meters shall make use of non volatile memory for storage of all data including billing and tamper data and data shall be retained even if any component fails.

3.4 The meter should not be dependent on the PT supply and should have the provision of auxiliary power supply. 48V to 110V DC/ 230VAC and shall continue to communicate other remaining parameters on auxiliary power supply.

3.5 Computation of demand shall be on the basis of Real Time Clock of the meter.

3.6 Meters covered under this specification shall be fully static type with non volatile memory to register various billing parameters and complete with other features as detailed out in this specifications. Any other design meeting technical specification requirements or features / accuracy etc. better than this specification requirement manufactured as per relevant IEC /Technical Specification shall also be acceptable.

3.7 Meters shall be suitable for accurate measurement and display of energy and other billing parameters within the specified limits of errors under balanced and unbalanced loads conditions in a poly phase network.

3.8 Power factor Range: Meters shall be suitable for measurement of billing parameters with specified accuracy for full power factor range i.e. zero lag unity zero lead.

3.9 KVAh computation shall be on the basis of power factor lag + lead principle.

3.10 Multiplying factor for the CTs & PTs ratios shall be external.

3.11 The display of energy & also demand shall have minimum seven digits with fixed decimal. The energy and demand shall be displayed in kWh, kVAh, kVARh& kW, kVA, kVARh respectively.

3.14 Provision shall be made to read various billing parameters and also load survey data through a meter reading instrument. This arrangement can be through an optical coupler or any other suitable device galvanically isolated from meter circuit. Provision shall be made to seal the optical coupler to ensure proper security.

3.15 Meter shall indicate the connection status on the display for proactive maintenance.

3.15 Meters shall be designed for satisfactory operation with the following supply voltage / frequency 50 Hz).

Voltage – V. ref +20% to -30 %

Frequency – 47.5 Hz to 52.5 Hz (ref. frequency 50 Hz)

(For above voltage and frequency range the meters shall measure, register and display various parameters accurately).

3.16 **Display Parameters**

The data shall be displayed on LCD display which shall be clearly visible from distance in 7 segments 7 digit.

The display parameters on Auto Scroll as well as Push Button shall be as follows:

SN	Parameter
1.	LCD Segment Check
2.	Meter Serial Number
3.	Real Date And Time
4.	Incoming Active Energy (Total)
5.	Outgoing Active Energy (Total)
6.	Incoming Reactive Energy (Total)
7.	Outgoing Reactive Energy (Total)
8.	Incoming Apparent Energy (Total)
9.	Outgoing Apparent Energy (Total)
10.	Three Phase Power Factor (Instantaneous) With Sign
11.	Line Current L1 (Instantaneous)

12.	Line Current L2 (Instantaneous)
13.	Line Current L3 (Instantaneous)
14.	Phase to Neutral Voltages L1 (Instantaneous)
15.	Phase to Neutral Voltages L2 (Instantaneous)
16.	Phase to Neutral Voltages L3 (Instantaneous)
17.	Phase wise Power Factor
18.	Connection status Flag
19.	Frequency
20.	Incoming Active Demand (Instantaneous)
21.	Outgoing Active Demand (Instantaneous)
22.	Incoming Apparent Demand (Instantaneous)
23.	Outgoing Apparent Demand (Instantaneous)
24.	Incoming Reactive Demand (Instantaneous)
25.	Outgoing Reactive Demand (Instantaneous)
26.	Present PT status
27.	Present CT status
28.	Last occurred and restored tamper with date and time
29.	High resolution active import energy
30.	High resolution active export energy
31.	High resolution reactive import energy
32.	High resolution reactive export energy
33.	High resolution apparent import energy
34.	High resolution apparent export energy

3.17 Meter Reading during Power Outage
It shall be possible to read the meter if there is No Power to the meter.

3.18. Maximum Demand Registration
Maximum demand computation shall be based on block interval concept with integration period of 15 minutes.

3.19 The MD integration cycle shall be on the basis of real time.

3.20. **Tamper Features**

Missing Potential – To indicate loss of potential in any or two phases of potential supply. The identification of phase date and time of first occurrence, date and time of last tamper restore and cumulative number of tampering shall be indicated.

Current Unbalance – To indicate there has been unbalance of current beyond the prescribed limits. (As approved by BSES)

Voltage Unbalance – To indicate there has been unbalance of Voltage beyond the prescribed limits. (As approved by BSES)

CT Short/ Open – The meter shall be capable of detecting and recording occurrences and restoration of shorting (bypassing) / opening of any one or two phases of CT.

Current Reversal – The meter shall be capable of detecting and recording occurrence and restoration with date and time if the current is flowing in reverse direction in one or more phases.

Power On/Off – The meter shall be capable to record power on /off events in the meter memory. All potential failure should record as power off event.

Over Current –When load condition at any phase i.e. Line current at any phase goes more than defined limit (as approved by BSES), this will be detected as Over current condition.

High and Low Voltage –The meter should detect under and over voltage events respectively if voltage falls / rise from defined limits. (As approved by BSES)

Snapshots (numerical values) should have Phase wise value of given parameters as voltage, current (Line, Active, Reactive), power factor and active, reactive & apparent energy readings with direction tag as well as the date and time of logging of the occurrence and restoration of all tamper events, subject to meter-memory space as described herein under, should be logged in the meter-memory and available for retrieving through local communication using CMRI or remote communication using the MDAS/HES.

Minimum 200 events (occurrence and restoration where occurrence and restoration shall be counted as separate events) of all tampers with date and time shall be available in the meter memory on first-in, first-out basis.

The values for voltage, current and P.F. etc. for the purpose of logging occurrence and restoration of various types of tamper shall be mentioned.

3.21 Provision should be made for automatic reset of max demand at the end of pre-defined period (eg. Beginning of month, every16th of month etc). Default resetting date is 00:00 hrs, 1st of every month. Billing parameters should be available for last 12 months.

3.22 **Load Survey Capability**

It should be possible to store previous data of 40 days for interval of 15 minutes for parametersand snapshots of energies at 24:00hours as mentioned below:

Load Survey Parameters (15 minute integration for last 40 days)	
S.N0	**Description**
1	Average Active Demand (Outgoing)
2	Average Active Demand (Incoming)
3	Reactive Demand lag While Active Import
4	Reactive Demand lead While Active Import
5	Reactive Demand lag While Active Export
6	Reactive Demand lead While Active Export
7	Average Apparent Demand (Outgoing)
8	Average Apparent Demand (Incoming)
9	Average Active Energy (Outgoing)
10	Average Active Energy (Incoming)
11	Reactive Energy lag While Active Import
12	Reactive Energy lead While Active Import
13	Reactive Energy lag While Active Export
14	Reactive Energy lead While Active Export
15	Average Apparent Energy (Outgoing)
16	Average Apparent Energy (Incoming)
17	Phase Voltage (Instantaneous & Average) L1
18	Phase Voltage (Instantaneous & Average) L2
19	Phase Voltage (Instantaneous & Average) L3
20	Phase Current (Instantaneous & Average) L1
21	Phase Current (Instantaneous & Average) L2
22	Phase Current (Instantaneous & Average) L3
23	Phase wise Power factor
24	Frequency
25	Phase wise Average Active Demand (Outgoing)
26	Phase wise Average Active Demand (Incoming)
27	Power off minutes in integration period

Mid Night Parameters (Snapshot at 24:00 hours for last 40 days)	
1	Active Energy (Import)
2	Active Energy (Export)
3	Reactive Energy (Import)
4	Reactive Energy (Export)
5	Apparent Energy (Import)
6	Apparent Energy (Export)
7	Reactive lag While Active Import
8	Reactive lead While Active Import
9	Reactive lag While Active Export
10	Reactive lead While Active Export

3.23 It should be possible to down load parameters, daily midnight readings and load survey data using BCS and obtain full details of demand and consumption

3.24 Meters shall be four quadrant meters capable of recording active reactive and apparent energy and also demand in all the four quadrants.

3.25 **Communication**

For the output ports available in the meter, standard communication interface shall only be adopted. The Meters shall be Modbus compliant. **However it is preferable if meter have both Modbus and DLMS (IS 15959) protocols selectable at site.** The energy meter shall have a hardwired RS 485 port for serial data communication and galvanically isolated optical communication port, so that it can be easily connected to hand held common meter reading instrument for data transfer with proper security and without error. The energy meter shall have an optional RS 232 port so that there is a provision to subsequently hook the meter directly to a remote metering device such as GPRS/3G/4G Modem etc. The optical port shall be located in front of the meter and shall have adequate sealing arrangement to seal it.Meters covered under this specification will be employed for metering at sub stations. In this case the instantaneous parameters load survey data and tamper information etc will be monitored remotely at central station.

In case any proprietary protocol is used in the meter, It will be obligatory on the part of the bidders to furnish complete details of proprietary protocol to the purchaser so that there may not be any difficulty in extraction of data from the meter through the available ports when connected to the communication bus (prepared for some other data communication purpose). Details of protocol used are necessarily required to be intimated / furnished by the suppliers to purchaser.

The meter supplier shall integrate the meters with existing / planned remote communication system or device, including devices (from any vendor) and set-up used in BSES. The supplier is required to provide an undertaking in this regard.

It shall be possible to download the following parameters from Remote location at a frequency of every 15 minutes -

SN	Description
1.	LCD Segment Check
2.	Meter Serial Number
3.	Real Date And Time
4.	Incoming Average Demand (Active Power) in Last Integration Period
5.	Outgoing Average Demand (Active Power) in Last Integration Period
6.	Incoming Average Demand (Reactive Power) in Last Integration Period
7.	Outgoing Average Demand (Reactive Power) in Last Integration Period
8.	Incoming Average Demand (Apparent Power) in Last Integration Period
9.	Incoming Average Demand (Apparent Power) in Last Integration Period

10.	Incoming Active Energy (Total)
11.	Outgoing Active Energy (Total)
12.	Incoming Reactive Energy (Total)
13.	Outgoing Reactive Energy (Total)
14.	Incoming Apparent Energy (Total)
15.	Outgoing Apparent Energy (Total)
16.	Three Phase Power Factor (Instantaneous) With Sign
17.	Connection status Flag
18.	Line Current L1 (Instantaneous)
19.	Line Current L2 (Instantaneous)
20.	Line Current L3 (Instantaneous)
21.	Phase to Neutral Voltages L1 (Instantaneous)
22.	Phase to Neutral Voltages L2 (Instantaneous)
23.	Phase to Neutral Voltages L3 (Instantaneous)
24.	Phase wise Power Factor
25.	Frequency
26.	Incoming Active Demand (Instantaneous)
27.	Outgoing Active Demand (Instantaneous)
28.	Incoming Apparent Demand (Instantaneous)
29.	Outgoing Apparent Demand (Instantaneous)
30.	Incoming Reactive Demand (Instantaneous) with Sign(“+” for Lag”-“ for Lead)
31.	Outgoing Reactive Demand (Instantaneous) with Sign(“+” for Lag”-“ for Lead)
32.	Cumulative tamper count
33.	Cumulative MD reset Count
34.	Cumulative reactive (Demand & Energy) lag While active import
35.	Cumulative reactive (Demand & Energy) lead While active import
36.	Cumulative reactive (Demand & Energy) lag While active Export
37.	Cumulative reactive (Demand & Energy) lead While active Export
38.	Number of power failures
39.	Cumulative power failure duration.
40.	Present PT status
41.	Present CT status
42.	Last occurred and restored tamper with date and time
43.	Incoming maximum Active demand (Previous Month)
44.	Outgoing maximum Active demand (Previous Month)

45.	Incoming maximum Reactive demand (Previous Month)
46.	Outgoing maximum Reactive demand (Previous Month)
47.	Incoming maximum Apparent demand (Previous Month)
48.	Outgoing maximum Apparent demand (Previous Month)
49.	Incoming Active Energy (Previous Month)
50.	Outgoing Active Energy (Previous Month)
51.	Incoming Reactive Energy (Previous Month)
52.	Outgoing Reactive Energy (Previous Month)
53.	Incoming Apparent Energy (Previous Month)
54.	Outgoing Apparent Energy (Previous Month)
55.	Incoming Active Energy (Previous Month Consumption)
56.	Outgoing Active Energy (Previous Month Consumption)
57.	Incoming Reactive Energy (Previous Month Consumption)
58.	Outgoing Reactive Energy (Previous Month Consumption)
59.	Incoming Apparent Energy (Previous Month Consumption)
60.	Outgoing Apparent Energy (Previous Month Consumption)

3.26 Output device: The meters shall have a test output in the form of a blinking of LED for testing of the meters accuracy. Testing shall also be possible through optical port accessible from the front and can be monitored with meter reading instrument having high resolution display. The meters shall give high resolution energy values directly to meter reading instruments. The resolution will be sufficient to enable conduction of the starting current and accuracy test in less time.

3.27 Meter shall operate and record satisfactorily independent of phase sequence of input supply so long as phase association between voltage and current circuit is in order.

3.28 The performance of meter should not be affected by the external electromagnetic interference such as Electricals discharge of cable and capacitor, harmonics, electrostatic discharges, external magnetic field and injection of DC current in AC circuits etc.

3.29 The basic meter shall be designed for overloading up to 200%.

3.30 No setting point/ setting register etc, shall be provided for adjustment of measurement errors.

4. CONSTRUCTION OF THE METER

Body of the meter shall be designed suitable for projection mounting. The meter should be made of high

quality raw material to ensure higher reliability and longer life. The meter should be compact and reliable in design e.g. to transport and immune to vibration and shocks involved in transportation / handling. The construction of the meter shall be suitable for this purpose in all respects and shall give assurance of stable and consistent performance under all conditions especially during dust storm / heavy rains / very hot days. All insulating material used in the construction of the meter shall be non hygroscopic non ageing and of tested quality. All parts that are likely to develop corrosion shall be effectively protected against corrosion.

SN	Parameters	Technical Requirements
1.	Meter Body	Normally top transparent and base opaque material polycarbonate of LEXAN 143A/943AA or equivalent grade. Should be ultrasonically welded.
2.	Terminal Block	Made of polycarbonate of grade 500R or equivalent grade, Integral part of the meter base, brass or copper current terminals with flat end screw.
3.	Terminal Cover	Transparent terminal cover with provision of sealing through sealing screw.
4.	Resistance of heat and fire	The terminal block and meter case shall have reasonable safety against the spread of fire. They shall not be ignited by thermal overload of live parts in contact with them.
5.	Marking on name plates	"GRID Meter" shall be boldly marked on name plate. Design of Name plate will be approved by BSES before supply of meters.
6.	Meter Sealing	Supplier shall affix minimum one OWN hologram seal on side of meter body. Additionally another seal will be fixed as provided by BSES.
7.	Guarantee	5 years from date of installation or 5.5 years from date of dispatch.
8.	Insulation	A meter shall withstand an insulation test of 8kV.

5. INFLUENECE QUANTITIES

The meter shall work satisfactorily with guaranteed accuracy limit under the presence of the following influence quantities:

a. External Magnetic Field
b. Electromagnetic Field Induction
c. Radio Frequency Interference
d. Unbalanced Load
e. Vibration
f. Waveform 10% of 3rd Harmonics
g. Phase Sequence
h. Voltage Unbalance
i. Electromagnetic H.F Field
j. Temperature & Humidity

6. COMPONENET SPECIFICATIONS

SN	Component Function	Requirement
6.1	Current Transformers	The Meters should be with the current transformers as measuring elements.
6.2	Measurement or computing chips	The Measurement or computing chips used in the Meter should be with the Surface mount type along with the ASICs.
6.3	Memory chips	The memory chips should not be affected by the external parameters like sparking, high voltage spikes or electrostatic discharges.
6.4	Display modules	a) The display modules should be well protected from the external UV radiations. b) The display visibility should be sufficient to read the Meter mounted at height of 0.5 meter as well as at the height of 2 meters c) The construction of the modules should be such that the displayed quantity should not disturbed with the life of display (PIN Type). d) It should be trans-reflective HTN or STN type industrial grade with extended temperature range.
6.5	Communication modules	Communication modules should be compatible for the two RS 232 ports (one for optical port for communication with Meter reading instruments & the other - for the hardwired RS 232 port to communicate with various modems for AMR)
6.6	Optical port	Optical port should be used to transfer the meter data to meter reading instrument. The mechanical construction of the port should be such to facilitate the data transfer easily.
6.7	Power Supply	The power supply should be with the capabilities as per the relevant standards. The power supply unit of the meter should not be affected in case the maximum voltage of the system appears to the terminals due to faults or due to wrong connections.
6.8	Electronic components	The active & passive components should be of the surface mount type & are to be handled & soldered by the state of art assembly processes.
6.9	Mechanical parts	a) The internal electrical components should be of electrolytic copper & should be protected from corrosion, rust etc. b) The other mechanical components should be protected from rust, corrosion etc. by suitable plating/painting methods.
6.10	Battery	Lithium with guaranteed life of 15 years
6.11	RTC & Micro controller	The accuracy of RTC shall be as per relevant standards

SN	Component Function	Requirement
6.12	P.C.B.	Glass Epoxy, fire resistance grade FR4, with minimum thickness 1.6 mm

Note: The components used by manufacturer shall be of reputed make and shall have "Minimum Life"more than the 10 years. The vendor has to certify the same.

7. SEALING OF THE METER

Proper sealing arrangements shall be provided on the meter to make it tamper proof and avoid mishandling by unauthorized person. At least two (2) seals on the body, two (2) seal on the terminals blocks and one seal each on communication ports could be provided. All the seals shall be provided on the front side only.

The meter body cover should be ultrasonically welded with the base such that it would not be opened without breaking / damaging the meter body.

8. CONNECTION DIAGRAM AND TERMINAL MARKING

The connection diagram of the meter shall be clearly shown on inside portion of terminal cover and shall be of permanent nature, Meter terminals shall also be marked and this marking should appear in the above diagram.

8.1 Meter shall have a name plate clearly visible effectively secured against removal and indelibly and distinctly marked with all the essential particulars as per relevant standards i.e.

a. Manufacturer's name and trademark
b. Meter serial number*
c. Type and description
d. Rated current voltage and frequency
e. Relevant IS/ IEC No should be printed along with ISI certification mark.
f. Manufacturer's meter constant shall invariably be indicated duly printed.
g. Name of the utility – "Property of BSES"
h. Purchase order no.
i. Month and year of manufacturing
j. Guarantee Period

Meter serial nos shall be shared by BSES

9. GUARANTEE

The meter shall be guaranteed for the period of five years from the date of commissioning or five and half year from the date of dispatch, whichever is earlier. The meters and also software / MRIs found defective within the above guarantee period shall be replaced / repaired by the supplier free of cost within one month of receipt of intimation.

10. TESTS

10.1 Type Testing of Meters: The offered meter should be strictly in conformance to the tender specification. The offered meters should be fully type tested at NABL accredited Laboratory as per relevant standards.

10.2 Acceptance Test: All acceptance test as per relevant standard shall be carried out in the meter

10.3 Routine Test: All routine testsas per relevant standard shall be carried out in the meter

10.4 Pre Dispatch Inspection: All acceptance tests and inspection of meter / software shall be carried out at the place of manufacture unless otherwise specially agreed upon by the manufacturer and purchaser at the time of purchases. The manufacturer shall offer to the inspector representing the purchaser all the reasonable facilities, free of charge for inspection and testing to satisfy him that the materials is being supplied in accordance with this specifications. The Company's representative / Engineer attending the above testing will carry out testing as relevant Standard and this specification and issue test certificate approval to the manufacturer and given clearance for despatch.

Minimum Testing Facility: Manufacturer should posses fully computerized meter test bench system for carrying out routine and acceptance tests as per relevant standard. In addition this facility should produce test reports for each and every meter.

11. MANUFACTURING ACTIVITIVES

Meter should be manufactured using SMT (surface mount technology) component and by deploying automatic SMT price and place machine and reflow solder process. Further the bidder should own or have assured access (though hire, lease or subcontract) of above facility. Quality should be ensued at the following stages.
(a) At PCB manufacturing stage, each Company shall be subjected to computerized bare Company testing.
(b) At insertion stage all components should under go computerized testing for confirming to design parameters and orientation.
(c) Complete assembled and soldered PVC should under go functional testing using automatic test equipments (ATEs).
(d) Prior to final testing and Calibration all meters shall be subjected to aging test (i.e. metes will be kept in ovens for 72 hours at 55 deg. cent temperature and atmospheric humidity under real life condition at its full load current. After 72 hours meters should works satisfactorily) to eliminate infant mortality. The calibration of meters shall be done in house.The bidders should submit the list of all components used in meter along with the offer.
The suppliershall give 15 days advanced intimation to enable BSES to depute representative for lot inspection and complete all integration activities required by BSES before shipment of material.

12. PACKING

Each meter may be suitably packed in the first instant to prevent ingress of moisture and dust and then placed in cushioned carton of a suitable material to prevent damage due to shocks during transit. The lid of the carton may be suitably sealed. Each meter should be packed in separate cushioned carton. A suitable number of selected cartons may be packed in a case of adequate strength with extra cushioning if considered necessary. The cases may be properly sealed against accidental opening in transit. The packing cases should be marked to indicate the fragile nature of the contents.

13. DRAWING & TECHNICAL LEAFLETS

Following drawings & Documents shall be submitted with the offer:

a. Detailed dimensional drawing of the meter
b. Rating plate
c. Terminal Block dimensional drawing ‘
d. Mounting arrangement drawings, connection diagram
e. Meter box drawing and dimensions
f. Component list
g. Display parameter
h. Type Test Certificates from NABL approved laboratories.
i. Tamper details
j. PIN configuration of Optical to RJ11 connector
k. Manual and SOP/DWI for operation
l. 01 no Meter sample

14. General Requirement for MDAS/HES

MDAS / HES shall have following minimum features -

1. MDAS / HES shall be scalable to meet BSES requirement
2. MDAS / HES shall be hosted / deployed at BSES data center only
3. MDAS / HES shall have User Access Rights Management System so that as per capability and requirement of user, rights could be provided and security keeps maintained.
4. MDAS / HES shall have option to export CDF as per MIOS standard as well as user defined report generation in format of Excel, PDF, XML and CSV for further integration with system
5. MDAS / HES shall maintain the audit trail of all transaction/changes with date and time.
6. Facility for On Demand acquisition of meter data and at user selectable periodicity
7. MDAS / HES application should have cyber security features as per standards
8. Support secure communication at all interface points

9. Store raw meter data for defined duration
10. Maintain time sync with meter and provision to correct RTC as per defined roles
11. Handling of Control signals / event messages on priority
12. Setting of meter configurable parameters
13. Remote configuration of meter parameters as per defined user roles, firmware upgrades remotely, MIS reports and exceptions reports.
14. Selective meters data can be scheduled to pull from MDAS / HES as desired.
15. Ensure data availability of 99.5% at MDAS / HES
16. Ability to attempt meter reading to recover missed reads and intermittent meter reads
17. Ability to receive and store outage and restoration event data from smart meters and outage systems and to log all such events for analysis
18. The MDAS / HES shall enable BSES to deliver reports in standard digital format such as PDF, Excel, etc.
19. MDAS / HES shall have User dashboard for alarms, events, communication status and provision to send email, SMS etc.
20. Display via a GUI the energy usage profile for a single meter or group of meters. The load profile shall illustrate energy consumption and peak demand in user defined intervals for a user-specified time period.

15. AFTER SALES SERVICE

In order to provided prompt and smooth after sales support /service etc. It shall be preferred to post / engage an engineer/ technician in Delhi by the manufacturer, to attend any minor defects immediately and to educate the user about proper installation of meter and programming of MRI base computer taking reading billing data load survey tamper information etc. through MRI and down load to PCs.
Manufacturer shall undertake to replace meter in case of failure within the guarantee period. The meters which are found defective/inoperative within the guarantee period, shall be replaced within six weeks of receipt of report for such defective/inoperative meters. If the defective meters are not replaced within the specified period then the same shall be treated as breach of performance and shall be liable for penalty. Delivery of software for HHU/CMRI before meter delivery is required. Vendor shall also ensure to deliver solution to meet DERC mandate within mutually agreed timeline at both MDAS/HES and CMRI. For any false events recorded in meter, vendor shall depute their representative for field visit within one week and provide the root cause analysis in 2 weeks time.

--End of Doc--

BSES

Technical Specification

For Heat Shrinkable &

GIS Cable Termination Kit

(11 kV, 33 kV, 66 kV XLPE Insulated Cables)

Specification no – BSES-TS-45-TERM-R0

Rev:		0
Pages		22
Date:		19 Apr 2022
Prepared by	Abhishek Vashistha	
	Gautam Deka/Pronab Bairagi	19/4/22
Reviewed by	Puneet Duggal	
	Amit Tomar	
Approved by	Gaurav Sharma	
	Gopal Nariya	

Index

Record of Revision 3
1.0.0 Scope of work 4
2.0.0 Codes & standards 4
3.0.0 Cable Construction 5
4.0.0 Cable Termination Kits 7
5.0.0 Quality Assurance (QA) 12
6.0.0 Deviations 13
7.0.0 Delivery 13
8.0.0 Inspection Expenses 13
9.0.0 Penalty 13
Annexure – A: Guaranteed Technical Particulars (GTP) 14
Annexure – B: Kit Content Table (KCT) 16
Annexure – C: Routine and Acceptance Test 17
Annexure – D: Technical Deviation Sheet 17
Annexure – E: Service Conditions 18
Annexure – F: Bimetallic Aluminium / Copper Lug 19
Annexure – G: Aluminum/Copper Lug For XLPE Cable 20
Annexure – H: SOP 21

Record of Revision

Item/Clause No.	Change in Specification	Approved By	Rev

1.0.0 Scope of work

Heat Shrinkable & GIS Termination Kits, suitable for 11 kV & 33 kV, 66 kV XLPE / PILC cables, shall be designed, manufactured, tested, packed and delivered by the Vendor, as per Purchaser's requirements.

2.0.0 Codes & standards

2.1.0 National Standards:

SL	Standard Number	Title
2.1.1	IS – 13573: 2011	Joints & Terminations of Polymeric Cables for working voltages from 6.6 kV up to and including 33 kV Performance Requirements and Type Tests
2.1.2	IS – 7098 Part 2 : 2011	Cross-linked Polyethylene (XLPE) Insulated PVC sheathed cables : Part 2 : For working voltages from 3.3 kV up to and including 33 kV
2.1.3	IS – 692: 1994	Paper insulated lead-sheathed cables (PILC) for rated voltages up to and including 33 kV specification
2.1.3	IS – 10810: 1984	Methods of test for cables
2.1.4	IS – 7098 Part 3 : 2019	Cross-linked polyethylene insulated thermoplastic sheathed Cables specification: Part 3 - For working voltages from 66 kV up to and including 220 KV

2.1.1 International Standards:

S No.	Standard Number	Title
2.2.1	EA TS – 09 – 13	Electricity Association – Technical Specification -09-13 Material component for use in Electric Power Cable Termination & Joints for System voltage above 1000 V up to 36 kV
2.2.2	IEEE – 48	Standards Test Procedures and requirements for high voltage alternating current cable termination
2.2.3	IEC – 60183	Guide to the selection of high voltage cables
2.2.4	IEC – 885 Part 1-3	Electric test methods for electric cables
2.2.5	IEC – 60840	Power cable with extruded insulation and their accessories for rated voltage above 30 Kv (Um=36 kV) up to 150 KV (Um=170 kV) – test methods and requirements.

3.0.0 Cable Construction

Normal sizes of XLPE cables used in BSES system and the construction features of these cables are indicated below:

a. 11 kV, 3-core x 150 sq mm AL
b. 11 kV, 3-core x 300 sq mm AL
c. 11 kV, 3-core x 400 sq mm AL
d. 11 kV, 3-core x 400 sq mm AL(OFC Embedded)
e. 11 kV, 1-core x 1000 sq mm AL
f. 11 kV, 1-core x 150 sq mm AL HTAB with copper metallic screen
g. 11 kV, 1-core x 150 sq mm AL HTAB with Aluminium wire metallic screen
h. 11 kV, 1-core x 95 sq mm AL HTAB with copper metallic screen
i. 11 kV, 1-core x 95 sq mm AL HTAB with Aluminium wire metallic screen
j. 33 kV, 3-core x 400 sq mm AL
k. 33 kV, 3-core x 400 sq mm AL (OFC Embedded)
l. 33 kV, 1-core x 1000 sq mm AL
m. 66 kV, 1-core x 630 sq mm AL
n. 66 kV, 1 core x 1000 sq mm AL
o. 66 kV, 3-core x 300 sq mm AL
p. 66 kV, 3-core x 300 sq mm AL(OFC Embedded)

PILC type Cables:

3-core 240 or 300 sq. Mm. Al

3.1.0	Conductor	For XLPE : a) Electrolytic Grade stranded Aluminium Conductor / Annealed Copper Conductor b) Grade: H2/ H4 as per IS: 8130/84 (For Al) c) Shape: Compacted Circular d) Class 2 For PILC : a) 11 kV : sector-shaped b) 33Kv: oval-shaped
3.2.0	Conductor Screen	For XLPE : Extruded Semi Conducting material For PILC : 11 kV : no conductor screen 33 kV : carbon paper
3.3.0	Insulation	For XLPE: Extruded TR XLPE For PILC: Layers of impregnated papers

3.4.0	Insulation Screen	**Non Metallic Screen:** For XLPE Insulated cable: a) For 11, 33 U/G cable and HTAB cable - Freely strippable Semi Conducting (without application of heat) b) For 66kV cable - Firmly bonded semi conducting **Metallic Screen:** a) For For 11, 33 & 66 Kv U/G cable – Copper Tape b) For HTAB – option 1 – Copper Tape (old installations) and option 2 – Aluminium wire (new installations) For PILC : a) 11 kV : absent (Belted) b) 33kV: metallised paper tape
3.5.0	Water Swellable Tape	For XLPE: Semi-conducting Water Swellable Tape shall be provided under the copper tape on each core. For PILC : not applicable
3.6.0	Filler	For XLPE: All interstices, including centre interstices filled by PP filler. Note- In special cases, for 66kV 3CX300 sqmm, 33kV, 3CX400 and 11kV 3CX400 cable are with-36 nos. Single mode and 12 nos. Multi modes OFC are also inbuilt as filler.Requirement of cable joint kit with OFC shall be fulfilled as per tender requirement For PILC : a) 11 kV : Crushed paper filler b) 33kV: Jute twine
3.7.0	Over all three cores	XLPE : Binder tape PILCA : 11 kV : belt paper 33kV: Copper Woven Fabric tape
3.8.0	Inner Sheath	For XLPE: Extruded Inner Sheath of Black PVC type ST-2. For PILC : Lead alloy sheath
3.9.0	Bedding Tape	For XLPE: not applicable For PILC: two layers of paper, followed by compounded (bituminized) cotton tape.
3.10.0	Copper Woven Fabric Tape (CWF tape)	For XLPE : not applicable For PILC : a) 11 kV : absent (Belted cable) b) 33 kV : applicable for screened cable
3.11.0	Armour	For XLPE : a) Galvanised Steel round Wires/ Galvanised steel flat strip armour (For 3 core cables) b) Hard drawn Aluminium Wire (For 1 core cables) c) Aluminium or lead sheathed for 1Core 66kV cables For PILC : a) 11 kV double steel tape armour
3.12.0	Binder Tape	For XLPE: Rubberised cotton tape

3.13.0	Outer Sheath	For XLPE: Extruded outer sheath of PVC (ST-2) for 11 kV/ 33 KV and HDPE for 66kV Cable with termite- repellent. For 66kV Cable- HDPE extruded semicon layer or HDPE with graphite layer. For PILC : compounded (bituminised) Jute/PVC
3.14.0	HTAB Cable (1CX150 and 1CX95) core construction	Aluminium conductor-conductor semicon screen- TR XPLE insulation-insulation semicon screen–Water Swell-able tape –Round wire armou installation) / Copper Tape (old installation)) Water Swell-able tape-outer sheath

4.0.0 Cable Termination Kits

General Technical Requirements for Cable Termination Kits are as follows:

4.1.0	Scope	Design, manufacture, testing and supply of Cable Termination Kits for H. T. Power Cables.
4.2.0	Functional Requirements	
4.2.1	Conductor Connection	

Voltage Grade	Cable Size	Application	Material of Lug	Connection Method
11 kV	3Cx150, 3Cx300 and 3Cx400 sq mm	Indoor	Bi-Metal	Crimping
		Outdoor	Bi-Metal/ Aluminium as per tender requirement	Crimping
	1Cx1000 sq mm	Indoor	Aluminium	Crimping
		Outdoor	Aluminium	Crimping
HTAB (indoor not required)	1Cx95	Outdoor	Aluminium	Crimping
	1Cx150	Outdoor	Aluminium	Crimping
33 kV	3Cx400 sq mm	Indoor	Aluminium	Crimping
		Outdoor	Aluminium	Crimping
	1Cx1000 sq mm	Indoor	Aluminium	Crimping
		Outdoor	Aluminium	Crimping
66 kV	3Cx300	Indoor	Aluminium	Crimping
		Outdoor	Aluminium	Crimping
	1Cx630, 1Cx1000 sq mm	Indoor	Aluminium	Crimping
		Outdoor	Aluminium	Crimping

* For Bimetallic Lug Copper portion shall be tinned

		a) For GIS cable termination kits: Plug in type, Conductor connection assembly shall be by standard method of split, silver-plated copper cone and pressure-fit contact assembly or as per manufacturer's standard. b) Top corners of all lugs shall be circular shape not rectangular. Refer Annexure F for details.(Except GIS kit)
4.2.2	Stress Control System	a) The earthed insulation screen of an XLPE cable is terminated at a suitable distance from the conductor. b) The tube is in electrical contact with insulation screen. c) Impedance of the tube shall be constant up to an operating temperature and shall be within the range $1x10^{08}$ ohm-cm to $8x10^{08}$ ohm-cm. d) Length of stress control tube for 11 kV and 33 kV shall be 130 mm and 260 mm respectively or according to insulation tube length. For 66kV termination kits, stress control tube shall be as per type tested design. e) The physical and electrical properties shall conform to ESI 09: 13. f) For GIS cable termination kits Stress control shall be by means of a polymeric stress cone. External profile of the cone shall match inner profile of GIS epoxy bushing. Vendor shall specify the material (EPDM / Silicone) of the cone.
4.2.3	Insulation Protection	a) XLPE insulation shall be protected by means of an outer tube, resistant to tracking and weathering. b) One end of the tube shall be coated internally with red sealant mastic for a length of 50 mm. c) Physical and Electrical properties shall conform to ESI 09: 13. d) Insulation Tube length for termination- shall be 650 mm for both Indoor and Outdoor Termination kits of 11kV, 3CX150, 3CX300 and 3CX400 sqmm cable. All other accessories related to termination shall be according to 650mm insulation tube length.
4.2.3.1	Outer Anti-tracking Tube	Outer length of the tube shall be controlled by providing creepage Extension Shed having the same material composition as the tube. These lengths are given in the table below: Creepage distance shall be 31mm/kV minimum.
4.2.3.2	OFC (66kV, 3CX300 sqmm , 33kV, 3Cx400 sqmm and 11kV, 3Cx400 sqmm cable)	Termination kit for OFC (36 single mode and 12 nos. Multi mode) shall be supplied along with termination kit.

Cable System		Length of tube (mm)		Creepage Extension Shed (No.)	
Voltage	Cores	Indoor	Outdoor	Indoor	Outdoor
11 kV	3 – core	650	650	Nil	2

	1 – core	340	340	NIL	2
33 kV	3 – core	800	1200	2	5
	1 – core	600	600	2	5

4.2.3.3	Oil Barrier Tube (applicable for PILC cable termination)	a) Transparent tube is used for restoring the insulation provided by belt paper, which is terminated at the crotch. b) 33 kV PILC Termination: The oil barrier tube provides an oil-resistant layer to contain impregnating compound within, thus preventing anti-tracking tube coming in contact with the impregnating compound.
4.2.4	Environmental Sealing System	a) Red Sealant Mastic Tape: This tape, used for sealing at ends, shall be synthetic rubber-based and resistant to tracking and weathering. Sufficient quantity of this tape shall be provided. b) Lug-sealing Sleeve: It shall have the same material composition as outer anti-tracking tube. The sleeve shall be fully coated internally with red sealant mastic tape. Length of the sleeve shall be so as to cover half length of the lug barrel and an equal length of track-resistant tube. c) Conductive Break-out: It shall be provided over the crotch for 3-core cables. The break-out base shall overlap PVC outer sheath by a 50 mm. Minimum. d) For GIS termination kits : Environmental sealing of cores below the switchgear shall be by means of a trifurcation kit, consisting of heat shrinkable conductive break-out and heat-shrinkable conductive tube of total length of 6 metres supplied in one roll.

4.2.5	Earth Bond System	Minimum Armour Fault Current Carrying capacity of cbles is as following: 11 kV U/G Cable – 11 kA for 1 sec 33 kV Cable – 31.5 kA for 1 sec 66 kV Cable – 31.5 kA for 1 sec 11 kV HTAB Cable – 11 kA for 1 sec Fault current requirement shall be met by Tinned copper braid as per following: 11 kV U/G cables – Three No's 25 sq mm each 33 kV Cable – Four No's of 50 sq mm each 66 kV Cable – Four No's of 50 sq mm each HTAB Cable with copper tape metallic screen – Three No's of 25 sq mm each Length of the copper braided conductor shall be 750 mm. Each copper braided conductor shall be supplied with copper lug, crimped at one end For HTAB Cable with Aluminium wire metallic screen – Tinned copper braid is not required. 1 No's of Aluminium crimping lug of 120 sq mm cross section area shall be provided instead
4.2.6	Suppression of electrical discharges	Following materials are required for use during cable termination : a) Silicone-based compound Required for filling-in minute services/ surface cracks over XLPE insulation. b) Polymeric mastic Required for application over semicon screen, for, eliminating any air-entrapment at any cut point on the surface. It should have sufficient elongation and electrical properties compatible with stress control tube.
4.2.7	Installation. Instruction Sheet	It shall be in English and Hindi language and shall be provided inside every kit.
4.2.8	Paper Measuring Tap	Required for use during cable preparation / terminations.
4.2.9	Identification Tag (for traceability)	a) An aluminum pouch with paper tag & sealing arrangement at one end shall be provided. b) This tag is required to be tied over the cable at one side of the joint. c) The paper tag shall give following information 1) Vendor kit designation 2) Division 3) Breakdown ID/Shutdown ID/Scheme No. 4) Cable section 5) Type of joint 6) Size of Joint 7) Make of joint 8) Voltage class

		9) Serial no. of kit 10) Vendor lot & batch no 11) Month & year of manufacturing 12) Date of installation 13) Name of jointer 14) Name of vendor supervisor 15) Name of BSES supervisor 16) Remarks In addition to above Stainless Steel Tag shall be provided with following details for straight through joint a. Manufacturing month and year (MM/YY format) b. Manufacturer name i.e Comp c. Manufacturer own sl no for future tracing
4.3.0	Technical Particulars	Vendor shall submit Guaranteed Technical Particulars (GTP) as per Annexure A.
4.4.0	Type Tests	i. Termination Kit shall be of type-tested quality from CPRI/ERDA/KEMA/CESI as per the BIS/IEC/IEEE within last 5 years. ii. In case of type test is more than 5 years old but less than 10 years old, bidder has to give undertaking that there is no changes in design. iii. In case of type test report is more than 10 years old, bidder has to conduct type test from CPRI/ERDA/KEMA/CESI as per the BIS/IEC/IEEE without any cost implications to BSES
4.5.0	Testing & Inspection	
	a) Tests	All the routine and acceptance tests shall be carried out as per ESI guidelines. (Also refer Annexure -C)
	b) Inspection	1) Buyer reserves the right to witness all tests specified on individual H. S. components, Moulded components or completed Cable Termination Kit. 2)Buyer reserves the right to inspect Cable Termination Kit at the Seller's works at any time, prior to dispatch, to verify compliance with the specification. 3) In-process and final inspection call intimation shall be given in 10 days advance to purchaser.
	c) Test Certificates	Three sets of complete Test Certificates (Routine & Acceptance tests) shall be submitted along with the delivery of Cable Termination Kits.
4.6.0	Documents	"Documents" refer to Documents, Data, Manuals, etc. (Scanned copy of signed documents also shall be part of entire soft file (e-file) or CD.)

4.6.1	Along with the Bid	Vendor shall submit signed 3 sets (plus 1 set of soft copy) of following documents: a) GTP (duly filled-in) (as per Annexure - A). b) Cross-sectional drawings for components Assembly c) Type Test Certificates d) Complete Catalogue and Instructions. e) Any other document.
4.6.2	After Award of Contract	Vendor shall submit signed 2 sets (plus 1 set of soft copy) of above mentioned documents within 15 days, for Purchaser's approval.
4.6.3	"As-Built" documents	Final signed "As-built" documents for the equipment in 3 sets (hard copy), 1 no. soft copy and 1 no. CD. These documents shall include signed Routine & Acceptance Test Certificates also.
4.7.0	Packing, Marking, Shipping, Handling and Storage	Every component/kit/box shall be properly sealed/ packed for protection against damage.
a)	Identification Labels:	Markings / Labels shall be on both sides of every packed box. 1) Identification number/type designation (as per manufacturer's standard) 2) Voltage grade, size, description of the Kit (including the voltage grade, size, type of the cables, for which it is to be used) 3) Batch no., lot no., etc. 4) Quantity 5) a) Purchase Order no. & date b) Purchaser's name c) BSES's SAP code number 6) Weight (kg) of each Cable Termination Kit and of each box containing kits. 7) Manufacturer's name 8) Month & Year of Manufacturing 9) Date of packing, Shelf life (if applicable) 10) In case, the termination kit is for RMU, following text shall be written in bold letters, with higher font size : "For RMU Application".
b)	Transit damage	The seller shall be responsible for any transit damage due to improper packing.

5.0.0 Quality Assurance (QA)

5.1.0	Vendor's Quality Plan (QP)	To be submitted for Purchaser's approval.
5.2.0	Sampling Method	Sampling Method for quality checks shall be as per manufacturer's standard practice / ESI guidelines and Purchaser's prior approval shall be taken for the same.
5.3.0	Inspection Hold-Points	To be mutually identified, agreed and approved in Quality Plan.

6.0.0 Deviations

6.1.0.	Deviations	a) Deviations from this specification shall be listed by bidder clause wise along with optional offer and has to submit the list along with bid./quotation. BSES will review the deviations and if BSES is agreed with the deviation, seller has to take written confirmation from BSES on deviation during tender evaluation.. b) In the absence of any list of deviations from the Seller with bid as well as written confirmation from BSES on deviations, it will be assumed by the Buyer that the Seller complies with the Specification fully. c) Any deviations mentioned in any other submitted bid documents (i.e.in filled GTP, Catalog, BSES old approval, buyer's/seller's standards etc) by seller without separate deviation sheets will not consider as a deviation from this tech spec at any stage of contract.

7.0.0 Delivery

7.1.0.	Delivery	Despatch of Material: Vendor shall despatch the material, only after the Routine Tests/Final Acceptance Tests (FAT) of the material witnessed/waived by the Purchaser, and after receiving written Material Despatch Clearance (MDC) from the Purchaser.

8.0.0 Inspection Expenses

Not Applicable

9.0.0 Penalty

Joint/Termination failure under warranty in regards to poor quality joint, poor work man ship, etc. shall be in the account of vendors. All kind of losses due to Joint/Termination failure shall be recovered from vendor.

Annexure – A: Guaranteed Technical Particulars (GTP)

The Seller is deemed to have examined all parts of the Specification documents and to have been fully informed, as to the nature of work and the conditions related to its performance.

S No.	Description	Purchase requirement	Vendor's data
1	Manufacturer's name		
2	Purchase Order no. & date		
3	Guarantee Period (minimum)	60 Months (from date of commissioning) / 66 Months (from date of receipt at Purchaser's store), whichever is earlier	
4	Applicable IS / IEC Standard followed by Vendor (incl. type test standard)		
5	Voltage Grade (kV)		
5.1	Lightning Impulse Voltage Withstand Test		
5.2	4Uo AC voltage withstand test for 4 hours	To be conducted on Installed joint at works	
6	Continuous operating temperature	90 deg. C	
7	Functional Requirements		
7.1	Method of Stress Control and Discharge Suppression		
7.2	Method of Insulation build-up and screening		
7.3	Method of earth bond a) Size and no. of braids b) Size of armour support c) No. of hose clips		
7.4	Method of mechanical protection a) for 3-core Cable b) for 1-core Cable		
7.5	Method of protection against corrosion (type & coating thickness of protective layer on steel mat)		
7.6	Method of conductor continuity a) For crimping connector b) For mechanical connector		

8	Description of items in the Kit, which are imported /sourced From Principal /Sub-suppliers		
9	Names of items in the Kit and their respective shelf life (months I years)		
10	Kit Content Table (KCT) enclosed? (Refer Annexure — B)	Yes / No	
11	Drawing for connector (ferrule) enclosed	Yes / No (If yes, mention the document reference)	
12	Is Annexure - D (Technical Deviation Sheet) duly filled-in?		
13	Packing (Qty) i) Packing of every Kit h) Group Packing	1 no -- No. of Kits per Box -- No. of Boxes	
14	Installation Procedure enclosed?	Yes / No (If yes, mention the document reference)	
15	Quality Assurance Plan (QAP for raw materials, in-process inspection, factory testing) is enclosed?	Yes / No	
16	Whether all heat-shrinkable and moulded components of the kit meet the requirements of and have been tested in accordance with EA TS -09-1 3.(for heat-shrinkable joints)	Yes / No (If yes, details of test report no. /Date /name of test laboratory to be mentioned.)	
17	Type Test Reports (TTR) (Relevant test report no. & date, With type, size, other details of each type of Kit.) a) Prepared Joint: CPRI TTR as per BIS / IEC enclosed? b) Loose Components: CPRI TTR as per EA TS 09-13 enclosed?	 Yes/No Yes/No	

18	Printing details on each of the Heat- shrinkable and Moulded components	(Mention the text, presently printed on each of the component)	
19	OFC kit (For OFC embedded cable only 66Kv, 3CX300 sqmm , 33Kv, 3cx400 sqmm and 11kv, 3cx400 sqmm)	Yes/no	

Annexure – B: Kit Content Table (KCT)

Vendor shall submit KCT as a consolidated table, consisting of all data, such as:

A. Heading

1. Voltage grade, size, description of the Kit
(Including the voltage grade, size, type of the cables, for which it is to be used)

2. Type designation (as per manufacturer's standard)

B. Details / Parameters

(For each component/item of the KCT)
1. Lot no. /Batch no., etc.
2. Item number (manufacturer's standard)
3. Description
a) Material, type, make and grade
b) Dimensions cross sectional area
c) Colour,
d) Other description, if any
4. Function of the item
5. Quantity
6. Make/Name/Location of manufacturer/sub-vendor
7. a) Minimum supplied (or in expanded form) diameter
   b) Maximum freely recovered diameter
8. a) Minimum supplied (or in expanded form) thickness
   b) Maximum freely recovered thickness

C. Notes on the KCT

Markings, printings, other details for individual/group of components are to be mentioned on KCT. For example:
a) Printing of item code, size, batch no., etc.
b) Printing on components
c) Other embossing or engraving, it any.

(Note: Vendor may attach an Annexure, for any additional information, if required.)

Annexure – C: Routine and Acceptance Test

A. Visual Examination

Condition of selected items / components, as per sampling method, shall be recorded. Some of the normal check-points can be as follows:

1. Every component shall be verified in quantity and description as per KCT.
2. All items shall be free from any defects, pin holes, cracks, etc.
3. Metallic components to be free from sharp edges.

B. Measurements of Dimensions

(Required / observed dimension — length, diameter, etc.)

1. Supplied dimensions
2. Recovered dimensions

C. Destructive Testing

On various heat-shrinkable / moulded components of ready Kits

(Items 3 and 4 are applicable only for heat-shrinkable components)

1. Tensile Strength
2. Wall Thickness Ratio
3. Heat Shock
4. Longitudinal Change, after full recovery
5. Ultimate Elongation
6. Low Temperature Flexibility
7. Dielectric Strength
8. Volume Resistivity

D. Routine Test Reports (RTR)

(Typical)

Each RTR shall clearly indicate P.O. no. & date and also BSES's SAP code no. RTR shall record the serial numbers of the kits selected, as per vendor's sampling method. Following details, besides vendor's/manufacturers standard check-points, shall appear in every RTR.

Annexure – D: Technical Deviation Sheet

Sr No.	Clause No.	Deviation

Annexure – E: Service Conditions

(Atmospheric conditions at Site)

1	Delhi	
a)	Average grade Atmospheric Condition:	Heavily Polluted, Dry
b)	Maximum altitude above sea level	1000 M
c)	Ambient Air temperature	Highest 50 deg C, Average 40 deg C
d)	Minimum ambient air temperature	0 deg C
e)	Relative Humidity	90 % Max
f)	Thermal Resistivity of Soil	150 Deg. C cmm
g)	Seismic Zone	4
h)	Rainfall	750 mm concentrated in four months

Annexure – F: Bimetallic Aluminium / Copper Lug

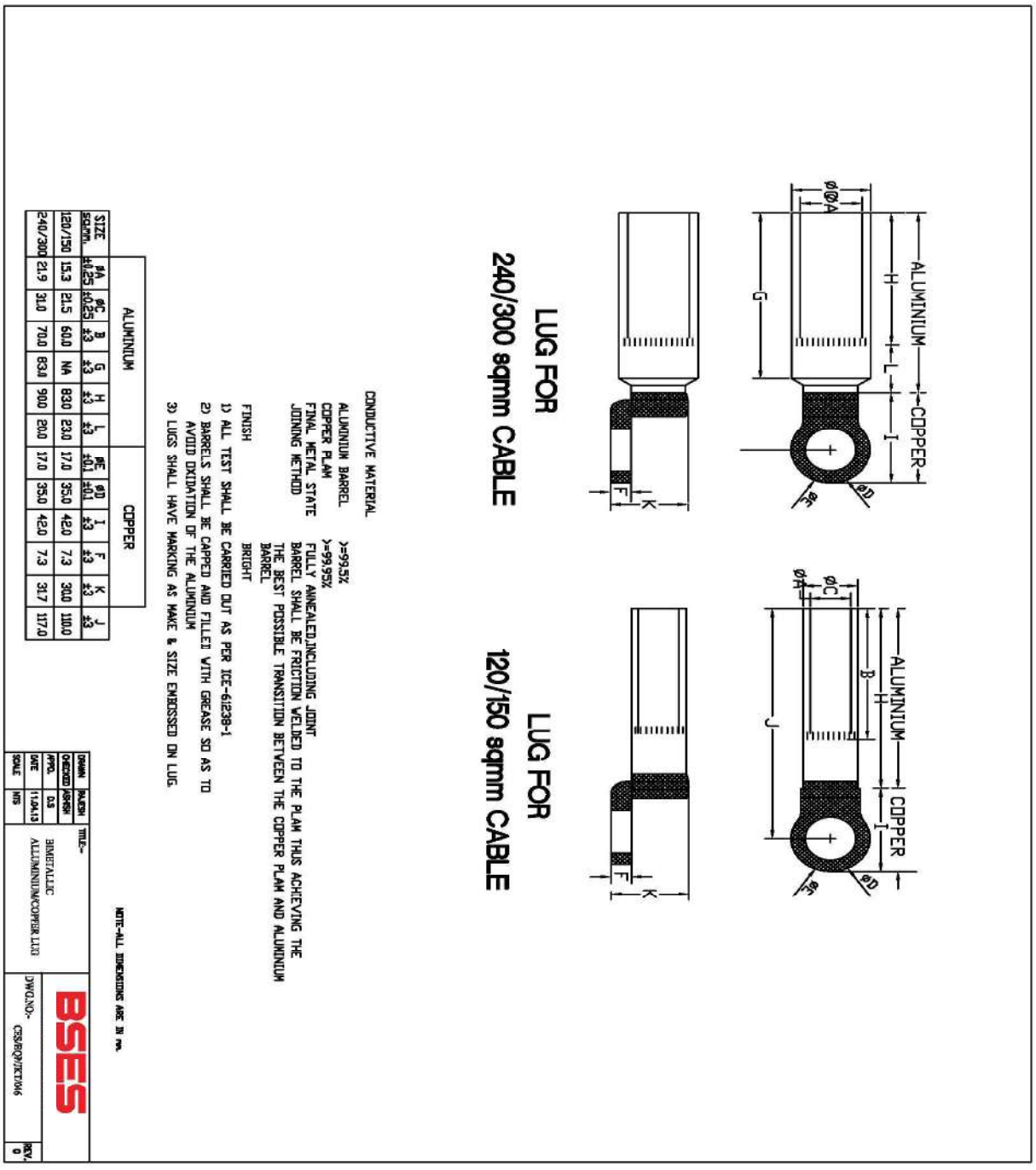

SIZE sq.mm.	ALUMINIUM							COPPER			
	øA ±0.25	øC ±0.25	B ±3	G ±3	H ±3	L ±3	øE ±0.1	øD ±0.1	I ±3	F ±3	K ±3	J ±3
120/150	15.3	21.5	60.0	NA	830	230	17.0	35.0	42.0	7.3	30.0	110.0
240/300	21.9	31.0	70.0	834	900	200	17.0	35.0	42.0	7.3	31.7	117.0

Annexure – G: Aluminum/Copper Lug For XLPE Cable

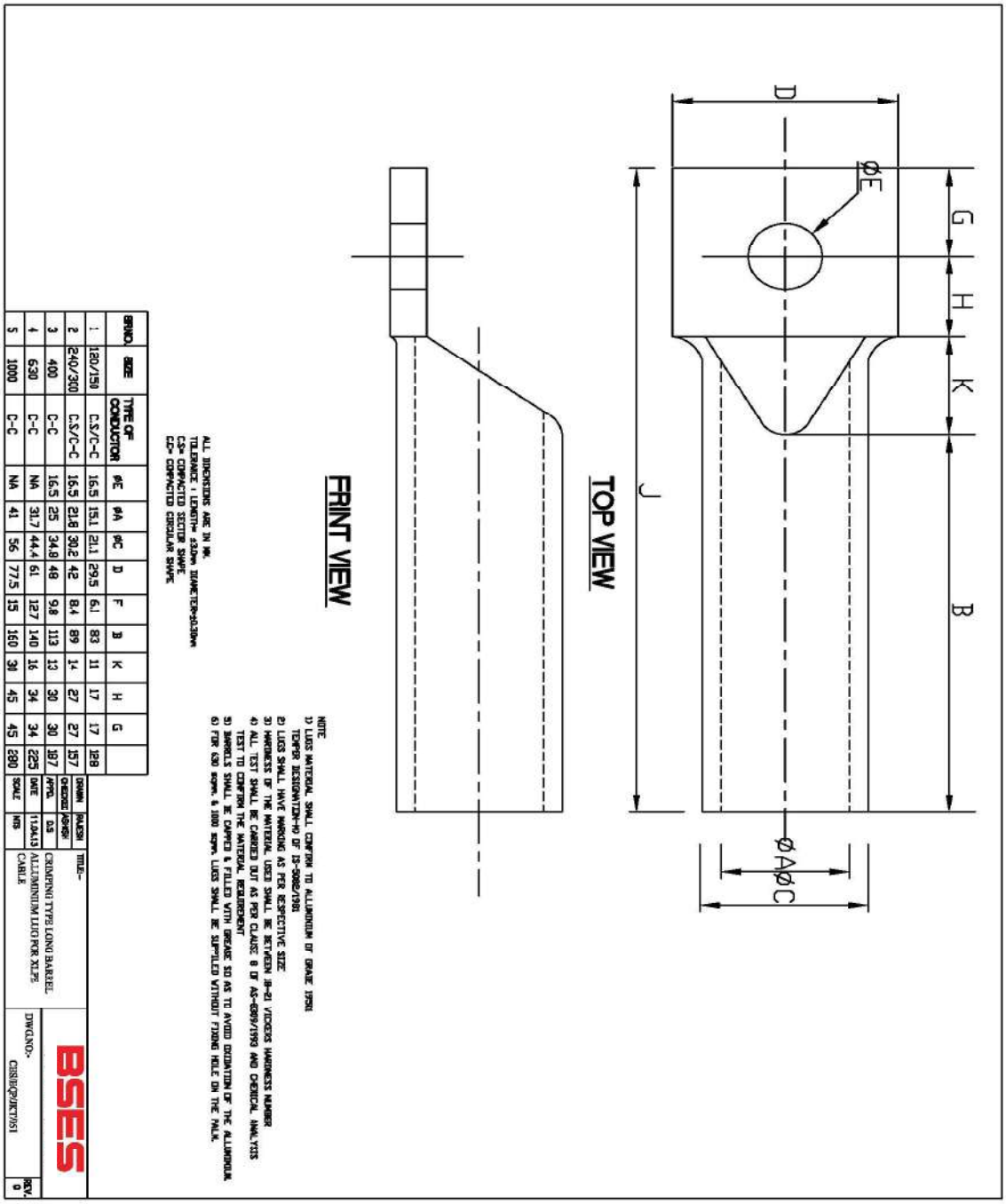

NOTE
1) LUGS MATERIAL SHALL CONFORM TO ALUMINIUM OF GRADE 19201 TEMPER DESIGNATION-H0 OF IS-5082/1981
2) LUGS SHALL HAVE MARKING AS PER RESPECTIVE SIZE
3) HARDNESS OF THE MATERIAL USED SHALL BE BETWEEN 28-32 VICKERS HARDNESS NUMBER
4) ALL TEST SHALL BE CARRIED OUT AS PER CLAUSE 8 OF AS-6809/1990 AND CHEMICAL ANALYSIS TEST TO CONFIRM THE MATERIAL REQUIREMENT
5) BARRELS SHALL BE CAPPED & FILLED WITH GREASE SO AS TO AVOID OXIDATION OF THE ALUMINIUM
6) FOR 630 sqmm & 1000 sqmm, LUGS SHALL BE SUPPLIED WITHOUT FIXING HOLE ON THE PALM.

ALL DIMENSIONS ARE IN MM.
TOLERANCE : LENGTH= ±3.0mm DIAMETER=±0.50mm
CS= COMPACTED SECTOR SHAPE
CC= COMPACTED CIRCULAR SHAPE

SRNO.	SIZE	TYPE OF CONDUCTOR	ØE	ØA	ØC	D	F	B	K	H	G	
1	120/150	C.S./C-C	16.5	15.1	21.1	29.5	6.1	83	11	17	17	128
2	240/300	C.S./C-C	16.5	21.8	30.2	42	8.4	89	14	27	27	157
3	400	C-C	16.5	25	34.8	48	9.8	113	13	30	30	197
4	630	C-C	NA	31.7	44.4	61	127	140	16	34	34	225
5	1000	C-C	NA	41	56	77.5	15	160	36	45	45	280

DRAWN	RAJESH	TITLE-
CHECKED	ASHISH	CRIMPING TYPE LONG BARREL ALUMINIUM LUGS FOR XLPE CABLE
APPD.	DJS	
DATE	11/04/13	
SCALE	NTS	DWG.NO- CESI/EQP/ELECT/051

BSES

REV- 0

Annexure-H

SOP FOR REPAIRING OF CABLE FAULT (Shall be part of PO)		
Sl. No.	Activity	Responsibility
Initiation		
1	Identify and isolate fault and inform GNIIT in case of cable fault	Break down team
2	Updation of the details in OMS against respective feeder tripping event.	GNIIT
Fault Location		
1	Information sent to FLC team and SDO.	GNIIT
2	Mobilize FLC team and cable jointing contractor.	SDO
3	Identification of fault location	FLC Team
Preparation for Jointing		
1	Seeking permission from road owning agency	SDO
2	Payment of RR charges to Road owning agency	Finance
3	Digging	Cable jointing contractor
4	Cut faulty section and Pre-test (HV test) cable for multiple fault	Cable jointing contractor
5	BOQ estimation for jointing work (type, size and length of cable, type of jointing kit)	Cable jointing contractor
6	Filling material reservation slip (MRS) in SAP	SDO
7	Issuing and transporting material from store.	Cable jointing contractor
Jointing		
1	Cable preparation (overlap length of cable, slide of armour, build up with inner sheath etc)	Cable jointing contractor (for jointing details refer to manufacturer instruction manual)
2	Copper tape shields	
3	Core preparation	
4	Location of parts in completed joints	
5	Earthing of connection	
6	Completion of joints	
7	Take Photographs before, during and after jointing and send to CES	SDO
8	Supervision during jointing	SDO
9	Sending failed joint to Division store	Cable jointing contractor
Completion and reporting		
1	Intimate to breakdown team about joint completion.	Cable jointing contractor
2	Conduct HV test	Break down team
3	Restore of Supply through jointed cable	Break down team
4	Backfilling, compaction of excavated soil and removing of excess earth from the site	Cable jointing contractor

5	Completion information in Job Card (Details of work done, material consumption, location, feeder name and joint tag no., date, supervisor name, jointer name) sent to SDO	Cable jointing contractor
6	Above information sent to GNIIT	SDO
7	Send information about GPS location of Cable fault to GIS	SDO
8	Daily report of cable jointing to CES	Division Head
9	Updating of information in OMS including supervisor name, jointer name, feeder name	GNIIT
10	Information to include GPS location of cable fault.	GNIIT

Special Note-

1) Joints to be done preferably during day. In case of constraints, DGM (O&M) to authorize for night time jointing with supervisor
2) Daily joint report to be shared with CES
3) Bi-monthly analysis of faulty joint for ensuring warranty compliance to be organized at circle level by contractor in presence of DGM (O&M) and CES
4) Certification of job card for payment by DGM (O&M) subject to OMS compliance CES to check any gaps.
5) After completion of jointing (33kV and 66kV), all the joints shall be covered with RCC coffin. Coffin shall be filled with white sand complete from the hole provided at the top of the coffin.

BSES

Technical Specification

Of

APPROVED MAKES & VENDORS OF EQUIPMENTS SUPPLY

Specification no – BSES-TS-317-APPEQ-R2

Rev:		2
Date:		28 Nov 2025
Prepared by	Shanmugam B	
Reviewed by	Uttam Shukla	
Approved by	Deepti Sharma	

Contents

1.0 SCOPE 3
2.0 APPROVED MAKES 3

1.0 SCOPE

- This specification applies to the design, engineering, manufacturing/fabrication, assembly, inspection, testing before dispatch, packing, forwarding, supply and delivery at destination by suitable transport, unloading at site, installation and commissioning of Electrical Substation equipments on Turnkey basis and as specified in the following sections of this document.
- All the Technical specification shall be followed for Electrical equipments, RTU/SCADA, DR equipments, etc. for it's detailed engineering wherever applicable and as per BSES requirements & based site conditions.
- All the makes & models Electrical equipment's shall be supplied as per BSES requirements only without cost implications.

2.0 APPROVED MAKES

Technical Specification of Approved Makes & Vendors

S No.	MANUFACTURER & VENDORS	REMARKS
1.0	**POWER TRANSFORMER**	
1.1	BHEL	
1.2	BHARAT BIJLEE LTD	
1.3	CG POWER & INDUSTRIAL SOLUTIONS POWER LTD	
1.4	HITACHI ENERGY LTD	
1.5	SCHNEIDER ELECTRIC INFRASTRUCTURE LTD	
1.6	VOLTAMP TRANSFORMER LTD	
2.0	**STATION TRANSFORMER**	
2.1	CG POWER & INDUSTRIAL SOLUTIONS POWER LTD	
2.2	DANISH POWER LTD	
2.3	MARSONS ELECTRICAL INDUSTRIES	
2.4	SCHNEIDER ELECTRIC INFRASTRUCTURE LTD	
2.5	TOSHIBA	
3.0	**66KV,33KV SF6 GAS INSULATED SWITCHGEAR (GIS)**	
3.1	BHEL	
3.2	CG POWER & INDUSTRIAL SOLUTIONS POWER LTD	
3.3	GE VERNOVA T&D INDIA LTD	
3.4	HYOSUNG T&D INDIA PVT LTD	
3.5	SIEMENS LTD	
3.6	ABB LTD	
4.0	**33KV SF6 GAS SWITCHGEAR**	

4.1	BHEL	
5.0	**33KV, 11KV SWITCHGEAR**	
5.1	ABB LTD	
5.2	CG POWER & INDUSTRIAL SOLUTIONS POWER LTD	
5.3	SCHNEIDER ELECTRIC INFRASTRUCTURE LTD	
5.4	SIEMENS LTD	
6.0	**66KV POWER CABLE**	
6.1	DYNAMIC	
6.2	HAVELLS INDIA LTD	
6.3	KEC INTERNATIONAL LTD (RPG CABLES LTD)	
6.4	KEI INDUSTRIES LTD	
6.5	STERLITE POWER TRANSMISSION LTD	
6.6	UNIVERSAL CABLES LTD	
7.0	**33KV POWER CABLE**	
7.1	DYNAMIC	
7.2	GEMSCAB INDUSTRIES LTD	
7.3	HAVELLS INDIA LTD	
7.4	KEC INTERNATIONAL LTD (RPG CABLES LTD)	
7.5	KEI INDUSTRIES LTD	
7.6	STERLITE POWER TRANSMISSION LTD	
7.7	TORRENT ELECTRICALS LTD	
7.8	UNIVERSAL CABLES LTD	
8.0	**11KV POWER CABLE**	
8.1	DYNAMIC	
8.2	GEMSCAB INDUSTRIES LTD	
8.3	HAVELLS INDIA LTD	
8.4	KEC INTERNATIONAL LTD (RPG CABLES LTD)	
8.5	KEI INDUSTRIES LTD	
8.6	PARAMOUNT COMMUNICATIONS LTD	
8.7	POLYCAB WIRES PVT LTD	
8.8	STERLITE POWER TRANSMISSION LTD	
8.9	TORRENT ELECTRICALS LTD	
8.10	UNIVERSAL CABLES LTD	
9.0	**LT(1.1 KV) POWER, CONTROL & COMMUNICATION CABLES**	
9.1	GEMSCAB INDUSTRIES LTD	
9.2	HAVELLS INDIA LTD	

9.3	KEC INTERNATIONAL LTD (RPG CABLES LTD)	
9.4	KEI INDUSTRIES LTD	
9.5	PARAMOUNT COMMUNICATIONS LTD	
9.6	POLYCAB WIRES PVT LTD	
10.0	**66KV OUTDOOR CIRCUIT BREAKERS**	
10.1	ABB LTD	
10.2	CG POWER & INDUSTRIAL SOLUTIONS POWER LTD	
10.3	SIEMENS LTD	
10.4	GE VERNOVA T&D INDIA LTD	
11.0	**11KV, 66KV OUTDOOR CT, PT**	
11.1	ABB LTD	
11.2	BHEL	
11.3	CG POWER & INDUSTRIAL SOLUTIONS POWER LTD	
11.4	GE VERNOVA T&D INDIA LTD	
11.5	KAPCO ELECTRIC PVT LTD	
11.6	MEHRU ELECTRICAL & MECHANICAL ENGINEERS PVT LTD	
12.0	**33KV, 66KV OUTDOOR CVT**	
12.1	ABB LTD	
12.2	CG POWER & INDUSTRIAL SOLUTIONS POWER LTD	
12.3	GE VERNOVA T&D INDIA LTD	
12.4	MEHRU ELECTRICAL & MECHANICAL ENGINEERS PVT LTD	
12.5	SIEMENS LTD	
13.0	**33KV, 66KV ISOLATORS**	
13.1	ABB LTD	
13.2	SCHNEIDER ELECTRIC LTD	
13.3	SIEMENS LTD	
14.0	**33KV, 66KV LIGHTNING ARRESTER**	
14.1	CG POWER & INDUSTRIAL SOLUTIONS POWER LTD	
14.2	ELECTROLITES POWER PVT LTD	
14.3	LAMCO INDUSTRIES PVT LTD	
14.4	OBLUM ELECTRICAL INDUSTRIES PVT LTD	
14.5	RAYCHEM RPG PVT LTD (Polymer type only approved)	
14.6	SIEMENS LTD	
15.0	**11KV CAPACITOR BANK**	

15.1	ABB LTD	
15.2	CONQUERENT CONTROL SYSTEMS PVT LTD	
15.3	SHREEM ELECTRIC LTD	
15.4	UNIVERSAL CABLES LTD	
16.0	**33KV, 66KV CONTROL & RELAY PROTECTION PANEL**	
16.1	HITACHI ENERGY LTD	
16.2	SCHNEIDER ELECTRIC INFRASTRUCTURE LTD	
16.3	SIEMENS LTD	
17.0	**NUMERICAL CONTROL & PROTECTION RELAYS (Refer CRPTechnical specification for details)**	
17.1	HITACHI ENERGY LTD	
17.2	ABB LTD	
17.3	SIEMENS LTD	
17.4	SCHNEIDER ELECTRIC LTD	
18.1	**REMOTE TERMINAL UNIT (RTU) / SUBSTATION AUTOMATION(SAS)**	
18.2	HITACHI ENERGY LTD	
18.3	SCHNEIDER ELECTRIC INFRASTRUCTURE LTD	
18.4	SIEMENS LTD	
19.0	**DISTURBANCE RECORDER**	
19.1	WIZTRIC	
20.0	**ACDB & BMK**	
20.1	CMKL	
20.2	EATHUN	
20.3	NEC	
20.4	NEPTUNE INDIA LTD	
20.5	POPULAR SWITCHGEARS PVT LTD	
20.6	SHIVALIC	
21.0	**JOINTING & TERMINATION KITS**	
21.1	3M ELECTRO & COMM. INDIA (P) LTD.	
21.2	COMPAQ INTERNATIONAL	Upto 11kV level only.
21.3	RAYCHEM RPG LTD	
21.4	YAMUNA DENSON	All Voltage level expect 3x300Sq.mm 66kV cable

22.0	**INDOOR & OUTDOOR LIGHTING**	
22.1	BAJAJ ELECTRICALS LTD	
22.2	CROMPTON GREAVES LTD	
22.3	SURYA ROSHNI LTD	
22.4	PHILIPS ELECTRONICS INDIA LTD	
22.5	HAVELLS INDIA LTD	
23.0	**OVERHEAD LINE ACCESSORIES (Clamps, Connector, Line Hardware & Accessories)**	
23.1	BURMA	
23.2	KLEMMEN ENGINEERING	
23.3	LEGION	
23.4	RASHTRA UDHYOG LTD	
23.5	RAYCHEM RPG PVT LTD	
24.0	**DISC AND PIN INSULATORS**	
24.1	ADITYA BIRLA INSULATORS	
24.2	BHEL	
24.3	IEC	
24.4	MORDEN INSULATORS LTD	
24.5	W.S.INDUSTRIES	
25.0	**STEEL TUBULAR POLES**	
25.1	ADVANCE STEEL TUBES LTD	
25.2	GOOD LUCK STEEL TUBES LTD	
25.3	FABRICO (INDIA) PVT LTD	
25.4	RAMA STEEL TUBES LTD	
26.0	**STEEL STRUCTURE**	
26.1	TATA STEEL	
26.2	SAIL	
26.3	RINL	
26.4	JSW STEEL	
26.5	NMDC	
27.0	**ACSR CONDUCTORS**	
27.1	DYNAMIC CABLES LTD	
27.2	HINDUSTAN VIDYUT PRODUCTS LTD	
27.3	LUMINO INDUSTRIES LTD	
27.4	MAHAVIR TRANSMISSION LTD	

27.5	ANVIL CABLES PVT LTD	
28.0	**BATTERY BANK (Li Ion / Ni-Cd)**	
28.1	HBL ENGINEERING LTD	Ni-Cd
28.2	AMCO SAFT BATTERIES INDIA PVT LTD	Ni-Cd
28.3	COSLIGHT INDIA TELECOM PVT LTD	Li-Ion
28.4	LOHUM CLEANTECH PVT LTD	Li-Ion
29.0	**BATTERY CHARGER CUM WITH DCDB**	
29.1	CHABI ELECTRICALS	
29.2	MASS TECH CONTROLS PVT LTD	
29.3	CADYNE AUTOMATICS LTD	
29.4	AMARA RAJA ELECTRONICS LTD	
30.0	**CABLE SEALING**	
30.1	MCT BRATTBERG INDIA PVT LTD.	
30.2	ROXTEC INDIA PVT LTD	
30.3	UGA CABLE AND PIPE SEALING SYSTEM INDIA PVT LTD	
32.0	**GAS HANDLING KIT (GIS/BLUE GAS/GREEN GAS)**	
32.1	DILO	
32.0	**NIFPS**	
32.1	CTR	
32.2	EASUN MR TAP CHANGER(P)LTD	
32.3	TRI-PARULEXFIRE PROTECTION SYSTEM	
32.4	VENDERE SALES	
32.5	VIMAL FIRE CONTROLS PVT LTD	
33.0	**FIRE SAFETY**	
33.1	AKS APEX FIREL ENGINEERING PVT LTD	
33.2	AND FIRE & SAFETY PVT LTD	
33.3	FOAM TECH ANTIFIRE PVT LTD	
33.4	SAFEX FIRE SERVICES PVT LTD	
33.5	STAR FIRE & SECURITY SYSTEM PVT LTD	
33.6	RAPID SAFETY SOLUTIONS	
34.0	**AIR CONDITIONING SYSTEM**	
34.1	CARRIER MIDEA INDIA PVT LTD	
34.2	LG ELECTRONICS.	
34.3	VOLTAS	

35.0	**EOT Crane**	
35.1	REVA INDUSTRIES INDIA PVT LTD	
35.2	DEMAG	
36.0	**TRANSFORMER OIL**	
36.1	APAR INDUSTRIED LTD	
36.2	SAVITA OIL TECHNOLOGIES LTD	
36.3	RAJ PETRO SPECIALITIES PVT LTD	
37.0	**HIGH MAST**	
37.1	BAJAJ ELECTRICALS LTD	
37.2	SKIPPER LTD	
38.0	**REINFORCEMENT STEEL**	
38.1	TATA STEEL	
38.2	SAIL	
38.3	JSW STEEL	
39.0	**CEMENT**	
39.1	AMBUJA	
39.2	ULTRA TECH	

BSES Rajdhani Power Limited
BSES Bhawan, Nehru Place, New Delhi- 19

TECHNICAL SPECIFICATION

TRAINING AND INSPECTION

Prepared by	Sonia Mittal	Mittal	Rev: 0
Reviewed by	Uttam Shukla	Shukla	Date: 21.11.2025
Approved by	Deepti Sharma	Deepti	

Training and Inspection

The Scope includes training and inspection of BRPL Officials at site and at OEM's factory on overall product and all its sub-components.

1. Training of BRPL officials

The Scope includes training of BRPL Officials at site and at OEM's factory on overall product and all its sub-components.
BRPL official will include departmental personnel from Operation & Maintenance, Protection, SCADA and Engineering.
Training will include, but not limited to, verbal and written communication on aspects ranging from operation, maintenance, safety, features and functions.
It will be the responsibility of contractor to arrange the following:

i) To arrange Air travel and Taxi for local conveyance at the contractors cost for the engineers/ officers deputed for carrying out the inspection of the material.
ii) To arrange the minimum 4 star accommodation at the contractors cost for the boarding/ lodging and meals thereof for the engineers/ officers deputed for carrying out the inspection of the material.
ii) To depute his competent representative to impart training of the material.

Following Table defines man days required for training of each equipment.

S. No.	Equipment	Training at Site (No. of Days)	Training at Factory (No of Days)	No. of BRPL Representatives for Factory Visit
1	C&R Panels	5	2	3
2	Power Transformer	1	1	2
3	11 kV Panels	1	2	3
4	SCADA – RTU	3	2	2
5	Battery Bank	1	0	0
6	Battery Charger	1	0	1
7	11kV APFC with Controller	2	0	0
10	Video Surveillance System	1	0	0
11	Fire Detection System	1	0	0
12	Fire Suppression System	1	0	0
13	GIS Panels	3	3	4
14	Each of the other equipment/testing instrument	1	0	0

2. Inspection & Testing

2.1 Independent Inspection

BRPL may at his discretion delegate inspection and testing of material to an independent inspector.

2.2. Dates for Inspection and Testing

The Contractor shall give the Owner reasonable notice (minimum 10 days) in writing of the date and the place at which any material will be ready for testing as provided in the Contract and Owner shall attend at the place so named within fifteen (15) days of the date, which the Contractor has stated in his notice. The Owner shall give the Contractor twenty four (24) hours notice in writing of his intention to attend the tests. The above notices shall be given at first by the quickest possible means and confirmed later in writing.

If on receipt of the Contractor's notice of testing, the Owner's representative does not find the material to be ready for testing, the costs incurred for re-deputation of inspector and re-inspection shall also be in Contractor's Scope.

2.3 Inspection charges:

Detailed Breakup of no. of inspectors for each inspection shall be as under.

S. No	Equipment	No of Inspectors
1	Power Transformer	2
2	CRP	3
3	RTU	2
4	HT Panels	2
5	For all other equipments	1
6	For all testing and measuring instruments	2
7	For all Stage inspections	1

It will be the responsibility of contractor to arrange the following:

i) Cost of all the inspections within India and abroad (including re inspections) including flight Tickets, local conveyance, Boarding and lodging (Minimum 4 Star Hotel for India and Minimum 4 Star for Abroad) shall be in scope of Vendor. The Factory visits will be held at OEM Factory only.

ii) To depute his authorized representative to associate during the inspection of the material.

In case of fake call or rejection of material or any other cause, the Owner is not liable for reimbursement of the expenditure so incurred by the contractor.

2.4 Rejection

If as-a-result of the inspection, examination or testing as per approved QAP, the Owner decides that any equipment is defective or otherwise not in accordance with the Contract, he may reject such equipment and shall notify the Contractor there-of, immediately. The notice shall state the Owner's objections with reasons.
The Contractor shall then with all speed make good the defect or ensure that any rejected equipment complies with the Contract.
If the Owner requires such Equipment to be re-tested, the tests shall be repeated under same terms and conditions. All costs incurred for re-deputation of inspector and re-inspection shall also be in Contractor's Scope.

BSES Rajdhani Power Limited
BSES Bhawan, Nehru Place, New Delhi- 19

VOLUME – II

SCHEDULE AND ANNEXURE

Annexure-O

Technical specification for New Grids 24x7 O&M support

Scope:

24x7 (8 Hours per shift) O&M support for equipment supplied by bidder inclusive of GIS and Terminations after Handing over of Grid by Vendor to BRPL for 6 months from the date of handover

O&M Shall cover following

Operation:

- Handling equipment with training (on job) to BRPL staff.
- Knowledge of sequence of operation (bidder to provide flow chart for the same in laminated form so that the same may be pasted on grid notice board).
- Competency level in electrical as well as mechanical operations.

Breakdown:

- Attending any breakdown in equipment supplied and replacement of faulty parts (within 10-12 hrs).
- Presence in experienced engineer during entire restoration sequence till equipment get energized.

General Guidance:

- Work force required to attend the outages – built a QRT (quick response team to attend breakdown during that tenure).
- Tools tackles and spares necessary for attending outage.- 1 set of special tools to be incorporated in tech doc to be handed over to user during HOTO.
- Skill level suitable to carry out the operation for 66kV/33kV.

Manpower Requirement:

- One Operator (Minimum ITI qualified), one Skilled worker and one reliever shall be assigned per shift.
- Qualification documents of Manpower assigned shall be submitted to BRPL for approval.

SCHEDULE – A

GENERAL PARTICULARS

(This shall from part of Technical Bid)

1.0 Bidder

1.1	Name	:	
1.2	Postal Address	:	
1.3	Telegraphic Address	:	
1.4	Telex number / Answer back code	:	
1.5	Phone(s)	:	
1.6	Name and Designation of the person who should be contacted in case of clarifications / details etc. not received expeditiously form the officer mentioned in item 1.6 above	:	
1.7	Brief write-up giving details of the organization, years of establishment and and commercial production activities, manufacturing, fabrication, shop testing, erection, testing, commissioning and after-sales service facilities, key personnel with their qualifications and experience, collaboration agreements, if any number of employees in various categories and last three (3) years turn over	:	
2.0	Bid Validity	:	
3.0	All the Schedules filled-in	:	Yes
4.0	All the Deviations brought out in Schedule – E1and E2	:	Yes
5.0	All the drawings, write-ups, literature, leaflets, calculations, details, etc as called for in the specification attached	:	Yes
6.0	Is the Bidder agreeable to undertake this contract, if deviations stipulated by him are not acceptable to the Purchaser	:	Yes/No

Schedules & Annexure **Schedule A**

Bidders Name : _____

Signature : _____

Name : _____

Designation : _____

Seal of Company Date : _____

SCHEDULE – B

LIST OF DRAWINGS ENCLOSED WITH BID

(This shall form part of Technical Bid)

S.No.	Drawing No	Title
1	2	3

Name of Firm : _____

Signature of Bidder : _____

Designation : _____

Date : _____

Seal of Company

SCHEDULE – C1

11KV INDOOR SWITCHGEAR

Sr. No.	Description	Incomer	Bus coupler	Outgoing	Capacitor	Transformer
1	**Switchgear assembly**					
1.1	Make					
1.2	Type					
1.3	Reference standard					
1.4	Voltage (normal / Max. KV)					
1.5	Frequency (HZ)					
1.6	Short circuit rating					
1.7	Short time current and duration					
A	Impulse withstand (KV peak)					
B	1min. Power freq. withstand test(KV rms)					
2	**Construction**					
2.1	Metal clad construction (Yes / No)					
2.2	Degree of Portion					
2.3	Minimum thickness of sheet metal used (mm)					
2.4	Draw out feature provided for					
A	Breaker with service, test & isolated position - Yes /No					
B	Voltage Transformer- Yes / No					
C	Protection relays -Yes /No					
2.5	Breaker cubicle					
A	Cubical door can be closed with breaker in test and isolated position -Yes / No					
B	Working zone units from floor level (mm)					
2.6	All meters, switchgear & relays flush mounted type -Yes /No					
2.7	Minimum clear space required					
A	Front for breaker withdrawal (mm)					

B	Rear (mm)					
2.8	Typical vertical section					
A	Overall dimensions					
	i. Length (mm)					
	ii. Breath (mm)					
	iii. Height (mm)					
B	Weight (Kg)					
3	**Bus Bar**					
3.1	Make					
3.2	Material & grade					
3.3	Reference standard					
3.4	Cross section area (mm2)					
3.5	Bus connection (joints)					
A	Silver plated -Yes /No					
B	Conventional made with anti oxide grease -Yes /No					
3.6	Rated continuous current amps					
3.7	Maximum temp. rise at rated continuous current DFG C					
3.8	Short time current and duration KA … secs					
3.9	DC resistance at 85 DEG C (Ω/m/Ø)					
3.10	Minimum clearance of bus bar and connection					
A	Phase to phase (mm)					
B	Phase to earth (mm)					
3.11	Bus bar provided with					
A	Insulation sleeve					
B	Phase barriers					
C	Cast resin shrouds for joint					
3.12	Bus bar supported spacing (mm)					
3.13	Bus bar insulators					
A	Make					
B	Type					
C	Reference standard					
D	Voltage class (KV)					
E	Min. creepage distance (mm)					
F	Cantilever strength Kg/mm2					
G	Net weight (Kg)					

4	**Circuit Breaker**					
4.1	Make					
4.2	Type					
4.3	Reference standard					
4.4	Related Voltage					
4.5	Related frequency					
4.6	Related current and its reference ambient temp					
A	Continuous current to limit the max. temp. rise to 55DEG C for silver plated connections and 40DEG C for conventional connections					
4.7	Related operating duty					
4.8	Symmetrical breaking capacity at rated voltage & operating duty KA rms.					
4.9	Rated making current (Kap)					
4.10	Short time current and duration KA … secs					
4.11	Insulation level					
A	Impulse voltage withstand on 1/50 full wave					
A	1min. Power freq. withstand test(KV rms)					
4.12	Maximum overvoltage factor while switching off					
A	Un loaded transformer					
B	Loaded transformer					
C	Un loaded CABLES					
D	Capacitor					
E	Motors					
4.13	Opening time max. No load condition (ms)					
4.14	Number of permissible breaker operation under vacuum loss					
4.15	At 100% breaking capacity					
A	Opening time Max. (ms)					
B	Arcing time max (ms)					
C	Total break time (ms)					
4.16						
A	Make time (Max) (ms)					
B	Total closing time (ms)					

4.17	Total length of contact travel (mm)					
4.18	No. of breaker operation permission without requiring inspection, replacement of contacts and other main parts.					
A	At 100% rated current					
B	At 100% rated breaking current					
4.19	Types of contents					
4.20	Maximum clearance in air (mm) from live part					
4.21	Between phases					
A	Between live parts and ground					
B	Type of arc control device provided					
4.22	Operating mechanism closing					
4.23	Type					
A	No. of breaker operations stored					
B	Trip free or fixed trip					
C	Anti pumping features provided					
4.24	Operating mechanism tripping					
A	Type					
B	No. of breaker operations stored					
C	Trip free or fixed trip					
D	Anti pumping features provided					
4.25	Spring charging motor					
A	Rating					
B	Make					
C	Voltage and permissible variation(%)					
4.26	Closing coil					
A	Voltage (V)					
B	Permissible voltage variation (%)					
C	Closing current at rated voltage (A)					
D	Power at rated voltage (w)					
4.27	Trapping Coil					

A	Voltage (V)					
B	Permissible voltage variation (%)					
C	Tripping current rated voltage (A)					
D	Power at rated voltage (w)					
4.28	Breaker / Accessories Accessories such as control switch indication lamps etc. furnished as specified. (Please attach separate sheet giving details of all Accessories, inter locks and safety shutters)					
A	Mechanical safety interlock					
B	Automatic safety interlock					
C	Operational interlock					
D	Emergency manual trip					
E	Operation counter					
F	Change / discharge indicator					
G	Manual spring charging facility					
H	Auxiliary switch with 6 No + 6 NC for owner's use					
I	Contacts wear indicator					
4.29	Auxiliary Switch					
A	Switch contacts type					
B	Contacts rating at					
	1) Make & Continuous (Amps)					
	2) Break (Inductive) (Amps)					
4.30	Net weighting of the breaker (Kg)					
4.31	Impact load foundation design (to include dead load plus impact value on opening at maximum interrupting rating) (Kg)					
4.32	On vacuum loss (Amps)					
A	Possible load current breaker (Amps)					
B	Possible fault current breaker (Amps)					
4.33	Overall dimensions					

A	Length (mm)					
B	Breath (mm)					
C	Height (mm)					
4.34	Type test report omidentical breaker furnished					
5	**Control & Indications**					
5.1	Push Button Make					
A	Type & Catalog No.					
B	Contact rating at 110V/220V.D.C					
C	Make & continuous (Amps)					
5.2	LED lamps: Make:					
A	Type & Catalog No.					
B	Watts /Voltage					
C	Lamps & lens replaceable from front with glass cover					
5.3	Selector switch: Make:					
A	Type & Catalog No.					
B	Contact rating					
C	Make & continuous (Amps)					
D	Break (Inductive)(Amps)					
6	**Current Transformer**					
6.1	Make					
6.2	Types & Voltage Level					
6.3	Reference standard					
6.4	C.T ratio as specified					
6.5	Short circuit withstand short time current for 1 sec. - KA rms Dynamic current -KA peak					
6.6	Class of insulation					
6.7	Temperature rise					
6.8	Basic insulation level					
6.9	For metering & protection					
A	CT ratio					
B	Class of accuracy					
C	Rated burden VA					
D	Knee point voltage V					
E	Excitation current at V_K / 4					
F	Rated saturating current Amp					
6.10	For differential & restricted earth fault protection					

A	CT ratio					
B	Class of accuracy					
C	Rated burden VA					
D	Knee point voltage V					
E	Excitation current at V_K / 4					
F	Rated saturating current Amp					
6.11	For restricted earth fault protection					
A	CT ratio					
B	Class of accuracy					
C	Rated burden VA					
D	Knee point voltage V					
E	Excitation current at V_K / 4					
F	Rated saturating current Amp					
G	Secondary resistance (Ω)					
6.12	For stand by earth fault protection					
A	CT ratio					
B	Class of accuracy					
C	Rated burden VA					
D	Knee point voltage V					
E	Excitation current at V_K / 4					
F	Rated saturating current Amp					
G	Over current rating continuous % over load (%)					
6.13	For sensitive by earth fault protection (CBCT)					
A	CT ratio					
B	Class of accuracy					
C	Rated burden VA					
D	Knee point voltage V					
E	Excitation current at V_K / 4					
F	Rated saturating current Amp					
G	Over current rating continuous % over load (%)					
7	**Potential Transformer**					
7.1	Make					
7.2	Types & Voltage Level					
7.3	Reference standard					

7.4	Voltage ratio					
7.5	Accuracy					
A	Corer-1					
B	Corer-2					
7.6	Rated burden					
A	Corer-1					
B	Corer-2					
7.7	Over voltage factor					
A	Continuous					
B	30 Seconds					
7.8	Class of insulation					
7.9	Temperature rise over ambient (^{0}C)					
7.10	Basic impulse level (KV peak)					
7.11	Winding connection					
A	Primary					
B	Secondary					
7.12	Fuses					
A	Continuous rating HV / LV (Amp)					
B	Symmetrical fault rating HV /LV KA rms					
C	Make					
7.13	Maximum ratio error at					
A	90% to 100% of rated voltage and 25% to 100% of rated secondary burden at unity power factor					
B	90% to 106% of rated voltage and 10% to 50% of rated secondary burden at 0.2 p.f.					
7.14	Maximum Phase difference at					
A	90% to 106% of rated voltage and 10% to 50% of rated secondary burden at 0.2 p.f.					
B	90% to 106% of rated voltage and 10% to 50% of rated secondary burden at 0.2 p.f.					
7.15	E=Weight (Kg)					
8	**Relay**					
8.1	Manufacture					
8.2	Model Type					

8.3	Draw out type with built in test facilities. Yes/ No					
8.4	Built in test facility Yes /No					
8.5	Type of mounting					
8.6	Reference standard					
8.7	All relays furnished as per drawing and specification					
8.8	All relevant relay leaflets and catalogue furnished					
8.9	Communication port type					
8.10	Auxiliary Supply					
8.11	Measurement and data acquisition feature					
8.12	Control and supervision					
A	IEC protocol					
B	Open protocol feature					
C	Programming facility					
D	Separate output for individual element					
E	Event recording facility number of events					
F	Required software offered					
8.13	C.T.secondary current					
8.14	Self diagnostic feature					
8.15	Modular design					
8.16	Relay details					
8.16.1	Over current					
A	Make					
B	Type					
C	Characteristic available					
D	Range of setting i. Current ii. Time					
E	Range of setting i. Current ii. Time					
F	Rated burden					
8.16.2	Synchronizing check relay					
A	Make					
B	Type					
C	Setting range					
8.16.3	Earth fault					
A	Make					
B	Type					
C	Characteristic available					

D	Range of setting i. Current ii. Time					
E	Rated burden					
8.16.4	Over current (Directional)					
A	Make					
B	Type					
C	Characteristic available					
D	Range of setting i. Current ii. Time					
E	Rated burden					
8.16.5	Earth fault (Directional) if applicable					
A	Make					
B	Type					
C	Characteristic available					
D	Range of setting i. Current ii. Time					
E	Rated burden					
8.16.6	Neutral unbalance relay					
A	Make					
B	Type					
C	Characteristic available					
D	Range of setting i. Current ii. Time					
E	Rated burden					
8.16.7	Under voltage relay					
A	Make					
B	Type					
C	Range of setting i. Current ii. Time					
D	Rated burden					
8.16.8	Over voltage relay					
A	Make					
B	Type					
C	Range of setting i. Current ii. Time					
D	Rated burden					
8.16.9	Busbar differential relay					
A	Make					

B	Type					
C	High impedance / low impedance					
D	Facility of CT radio adjustment possible through software. Yes / No					
E	CT supervision facility available. Yes /No					
8.16.10	Transformer differential relay					
A	Make					
B	Type					
C	High impedance / low impedance					
D	Facility of CT radio adjustment possible through software. Yes / No					
E	Facility of transformer vector group adjustment possible through software. Yes/ No					
F	Setting range					
G	Rated burden					
8.16.11	Restricted earth fault relay					
A	Make					
B	Type					
C	Combined with differential relay. Yes / No					
D	Setting range					
E	Rated burden					
8.16.12	Stand by earth fault relay					
A	Make					
B	Type					
C	Characteristics					
D	Setting range					
E	Rated burden					
9	**Meters**					
9.1	ammeter					
A	Make					
B	Type					
C	Reference standard					
D	Size					
E	Scale					
F	Accuracy class					
9.2	Voltmeter					
A	Make					

B	Type					
C	Reference standard					
D	Size					
E	Scale					
F	Accuracy class					
9.3	Energy Meter					
A	Make					
B	Type					
C	Reference standard					
D	Size					
E	Scale					
F	Accuracy class					
G	Measurement					
H	kWh					
I	kVARh					
J	kVAH					
K	Any Other					
L	Data stored capability					
M	Pulse output facility					
N	Data down loading facility					
10	**Secondary Wiring**					
10.1	Type of insulation					
10.2	Voltage grade					
10.3	Conductor material					
10.4	Conductor Size (minimum) and insulation wiring					
A	Potential circuit					
B	Control & current circuit					
11	**Terminal Block**					
11.1	Make					
11.2	Type					
11.3	Catalog No.					
11.4	20% spare terminal furnished					
12	**Cable Termination**					
12.1	Clearance for power cable termination					
12.2	Removable gland plate					
A	Material for multicore cable					
B	Material for single core cable					
C	Thickness of plate					
13	**Name Plate**					
13.1	Material					

13.2	Thickness					
13.3	Size for					
A	Breaker cubicle					
B	Instrument / devices					
14	**Space heater / plug socket**					
14.1	Cubicle heater					
A	Thermostat controlled					
B	Wattage					
C	Voltage					
D	Resistance (ohms)					
E	Thermostat range					
14.2	Plug Socket					
A	Type					
B	Rating					
14.3	Cubical heater & plug socket circuit provided with MCB's					
15	**A.C. /D.C. Supply**					
15.1	Isolated switches for incoming supply					
A	A.C. Type & rating					
B	D.C. Type & rating					
15.2	Isolated switches at each cubicle					
A	A.C. Supply type & rating					
B	D.C. Supply type & rating					
16	**Tropical Protection**					
16.1	Any Special treatment for tropical protection					
17	**Painting**					
17.1	Finish of switchgear					
A	Inside					
B	Outside					
18	**No. of Accessories furnished**					
A	Breaker lifting & handling trolley					
B	Any other					
19	**Tests**					
19.1	Reference standard					
19.2	Routine test to be performed on switchgear					
19.3	Type test certificates submitted					
20	**Drawing / Data**					

Schedules & Annexure **Schedule C1**

20.1	General arrangement for panel board					
20.2	Foundation Panel					
20.3	Bill of material					
20.4	Cross sectional drawing for every type of switchgear (Add sheets if necessary)					

Bidders Name : _____

Signature : _____

Name : _____

Designation : _____

Seal of Company Date : _____

SCHEDULE – C2

66 kV CONTROL & RELAY PANEL

	Parameter	Technical Particulars	
1.00.00	**CONTROL PANEL BOARD**		
1.01.00	Make		
1.02.00	Type		
1.03.00	Reference Standard		
1.04.00	Construction		
1.04.01	Degree of protection		
1.04.02	Sheet metal thickness mm		
1.04.03	Floor channel sills, vibration damping pads and kick plate furnished?		
1.05.00	Equipment Mounting		
1.05.01	All relays, meters and switches are flush mounted?		
1.05.02	Relays furnished in draw out cases with built in test facilitate?		
1.06.00	Name plate		
1.06.01	Material		
1.06.02	Thickness		
1.06.03	Size for:-		
	Equipment		
	Panels		
1.07.00	Mimic		
1.07.01	Material		
1.07.02	Width		
1.08.00	Internal Illumination		
1.08.01	Volt		
1.08.02	Watt		
1.08.03	Door switched controlled		
1.09.00	Space Heater		
1.09.01	Volt		
1.09.02	Watt		
1.09.03	Thermostat Controlled?		
1.10.00	Plug Socket		
1.10.01	Type		
1.10.02	Rating		
1.11.00	Panel Illumination, space heater & plug socket circuits provided with individual switch fuse units?		
1.12.00	AC/DC Supply - Type & rating of isolating switch fuse units for		
1.12.01	Incoming AC Supply		
1.12.02	Incoming DC Supply		
1.13.00	Internal Wiring		
1.13.01	Wire Type		
1.13.02	Voltage Grade		

1.13.03	Conductor Material		
1.13.04	Conductor Size for		
	i) Current / control circuit		
	ii) Voltage Circuit		
1.13.05	Wires identified at both ends with ferrules?		
1.14.00	Terminal block		
1.14.01	Make		
1.14.02	Type / Catalogue No		
1.14.03	20% spare terminals furnished?		
1.15.00	Ground Bus		
1.15.01	Materials		
1.15.02	Size (mm)		
1.16.00	Painting		
1.16.01	Type of finish		
1.16.02	Colour Shade - Inside/Outside		
1.16.03	Details of Painting procedure finished?		
2.00.00	**BREAKER CONTROL SWITCH**		
2.01.00	Make		
2.02.00	Type		
2.03.00	Reference Standard		
2.04.00	Contact Rating	220V DC	240V AC
2.04.01	Make & Continuous (A)		
2.04.02	Break (inductive) (A)		
3.00.00	**ISOLATING CONTROL SWITCH**		
3.01.00	Make		
3.02.00	Type		
3.03.00	Reference Standard		
3.04.00	Contact Rating	220V DC	240V AC
3.04.01	Make & Continuous (A)		
3.04.02	Break (inductive) (A)		
4.00.00	**METER SELECTOR SWITCH**		
4.01.00	Make		
4.02.00	Type		
4.03.00	Reference Standard		
4.04.00	Contact Rating	220V DC	240V AC
4.04.01	Make & Continuous (A)		
4.04.02	Break (inductive) (A)		
5.00.00	**PUSH BUTTON**		
5.01.00	Make		
5.02.00	Type		
5.03.00	Reference Standard		
5.04.00	Contact Rating		
5.04.01	Make & Continuous (A)		
5.04.02	Break (inductive) (A)		
5.05.00	NO & type of Contacts provided per button		
6.00.00	**LAMPS**		
6.01.00	Make		
6.02.00	Type		
6.03.00	Reference Standard		
6.04.00	Rating:		

6.04.01	Volt		
6.04.02	Watt		
6.04.03	Series Resistance		
6.05.00	10 % Extra lamps furnished?		
6.06.00	Size of lens		
7.00.00	**SEMAPHORE INDICATORS**		
7.01.00	Make		
7.02.00	Type		
7.03.00	Diameter of the Disc		
7.04.00	Operating voltage		
7.05.00	Burden (Watt DC)		
7.06.00	Whether latch in type or supply Failure type		
8.00.00	**INDICATING INSTRUMENT**	**Ammeter**	**Voltmeter**
8.01.00	Make		
8.02.00	Type		
8.03.00	Reference Standard		
8.04.00	Type of Movement		
8.05.00	Accuracy Class		
8.06.00	Scale in Degrees		
8.07.00	VA Burden		
9.00.00	**MULTIFUNCTION METER**		
9.01.00	Make		
9.02.00	Type		
9.03.00	Reference Standard		
9.04.00	Furnished in Draw out Case or not		
9.05.00	Type of Register		
9.06.00	Accuracy Class		
9.07.00	VA Burden		
9.07.01	Current Coil		
9.07.02	Voltage Coil		
10.00.00	**ANNUNCIATOR**		
10.01.00	Make		
10.02.00	Type		
10..03.00	Reference Standard		
10.04.00	No. of Annunciator groups furnished?		
10.05.00	No. of Windows per group		
10.06.00	Overall Dimension of a group (mm)		
10.07.00	Detailed Write-up on Scheme furnished?		
11.00.00	**TRANCDUCERS**		
11.01.00	Whether provided as per specification		
11.02.00	Make		
11.03.00	Type		
11.04.00	Output		
11.05.00	Accuracy		
11.06.00	Response Time		
11.07.00	Power Supply		
11.08.00	Isolation		
11.09.00	Catalogue furnished		

Schedules & Annexure **Schedule C2**

12.00.00	RELAYS	Make	Type
12.01.00	Relays furnished in draw out cases with built in test facilitates?		
12.02.00	Line Protection Panel		
12.03.00	Transformer Panel		
12.04.00	Bus coupler Panel		
12.05.00	Miscellaneous Auxiliary Relays		
12.06.00	Auxiliary Relay, Voltage Operated with		
	4 pair of contacts		
	8 pair of contacts		
12.07.00	Auxiliary Relay, Current Operated with		
	4 pair of contacts		
12.08.00	Catalogue of all relays submitted with bid		

Bidders Name : _____

Signature : _____

Name : _____

Designation : _____

Seal of Company Date : _____

SCHEDULE – C3

BATTERY CHARGER

Sr. No.	Description	Data to be filled by manufacturer
1	Manufacturer equipment type	
2	Conformance to design standards as per specification Yes / No	
3	Conformance to design features as per specification Yes / No	
4	Submitted to deviation sheet for each specification clause no - Yes / No	
5	Panel dimension in mm (length x depth x height)	
6	Panel weight in kg	
7	Panel enclosure protection offered	
8	Voltage regulation as per specification (value to be specified)	
9	Boost charging DC current adjustment range (Value to be specified)	
10	Amount of Ripple in DC in % - output with battery - without battery	
11	Charger efficiency offered	
12	Max temperature rise above ambient	
13	Power factor at rated load	
14	Rectifier bridge as per specification	
15	Heat generated by the panel in Kw	
16	AC MCCB - Make , rating	
17	DC MCCB - Make , rating	
18	Rectifier transformer - Make , rating	
19	Semiconductor rectifier - Make , rating	
20	DC conductor - Make , rating	
21.1	DCDB integral part of charger or separate?	
21.2	MCB for DC distribution boards - Make, rating	
22	Conformance to metering & indication as per specification	
23	Conformance to make of component as per specification	
24	Conformance to mimic diagram, labels & finish as per specification	
25	Submission of component catalogue - Yes / No	
26	DC charger nominal output current - (battery trickle charge + DC load)	
27	DC charger boost charge current	

28	DC battery	
29	DC battery duty cycle	

Bidders Name : _____

Signature : _____

Name : _____

Designation : _____

Seal of Company Date : _____

Annexure C Guaranteed Technical Particulars (Data by Supplier)

Sr. No.	Description	Data to be filled by Manufacturer
1	Battery (as per scope of supply annexure A) – Yes/No	
2	Manufacturer battery type	
3	Conformance to design standards as per specification clause no 2.0 – Yes/No	
4	Conformance to design features as per specification clause no 3.0 & 4.0 – Yes/No	
5	Submission of deviation sheet for each specification clause no – Yes/No	
6.1	Battery GA drawing submitted – Yes/No	
6.2	Battery selection / sizing calculation submitted – Yes/No	
7	Battery rating (C5) offered in Ahr	
7.1	Rating at temperature 27 deg C as per IS	
7.2	Rating at temperature 20 deg C as per IEC	
8.1	Battery rack type offered - steel or FRP	
8.2	Number of steps in a tier	
8.3	Number of tier in rack	
9	Battery bank dimensions in mm (length x depth x height)	
10	Battery cell weight in kg	
11	Battery cell anode - no. of plates & thickness in mm	
12	Battery cell cathode - no of plates & thickness in mm	
13.1	Battery cell nominal voltage	
13.2	Battery cell float charge voltage	
14	Battery cell maximum boost charge voltage	
15	Battery cell end cell voltage	

16	Total battery bank float charging voltage required in volts	
17.1	Total battery bank boost charging voltage required in volts	
17.2	Total time required for boost charging from end cell voltage to rated voltage / capacity	
18	Battery internal resistance (in Ohms) at fully charged condition	
19	Heat generated by battery at rated full load (in Kw)	
20	Electrolyte chemical name	
21	Electrolyte specific gravity at 27 deg C	
22	Recommended topping up frequency (in weeks or months)	
23	Amount of gas evolution in one full charge discharge cycle (in litre / Ahr)	
24	Type of separators used in battery cell	
25	Shelf life period (to retain 90% of energy from full charge condition at 27 deg C)	
26	Total battery bank short circuit fault level (in KA)	
27	Battery bank terminal bus bar with insulating shrouds – Yes/no	

SCHEDULE – C6

11kV AUTO-SWITCHED CAPACITOR BANK

S.No.	Description	
1	Manufacturer equipment type/make	
2	Conformance to design standards as per	
	specification Yes/No	
	- Capacitor Unit	
	- Series Reactor	
	- LA	
	- Isolator	
	- NCT	
3	Conformance to capacitor design requirements as per specification clause no.3.0 to 7.0 - Yes/No	
4	Submission of deviation sheet for each specification clause no. -Yes/No	
5	APP type capacitors offered?	
6	Capacitor bank arrangement / scheme conforming to specification?	
7	Capacitor bank (3 phase system)	
7.1	Capacitor bank (Rated capacitance at 50Hz)	
7.2	Capacitor bank rated voltage – 12Kv	
7.3	Capacitor bank KVAR at 11kV	
7.4	Capacitor bank KVAR at 12kV	
7.5	Capacitor bank line current at rated voltage, continuous operation	
7.6	Designed short circuit withstand capacity for 3sec	
7.7.1	Capacitor bank insulation level at 50Hz	

7.7.2	Capacitor bank impulse voltage withstand	
7.8	One spare single phase capacitor unit offered?	
8	**Capacitor single phase unit**	
8.1	Capacitor single unit capacitance at 50Hz	
8.2	Capacitor single unit rated operating voltage	
8.3	Capacitor KVAR (at rated voltage)	
8.4	Capacitor single unit continuous operating rated current	
8.5	Designed short circuit withstand capacity of single capacitor unit for 3sec	
8.6	Capacitor unit temperature category (required +5/ C)	
9	**Single capacitor unit construction**	
9.1	Enclosure sheet metal CRCA	
9.2	Enclosure sheet metal thickness in mm	
9.3	Hermetic sealing method (pressure welding/gas welding/sealant/ if any other pl. specify)	
9.4	Dimensions of a single capacitor unit	
	Height	
	Length	
	Width	
9.5	Weight of a single capacitor unit	
9.6	Single capacitor unit bushings	
	Type of insulator	
	Creepage distance	
	Clearance between two terminals	
9.7	No. of series group/unit	
9.8	No. of parallel elements/ series group	
9.9	No. of APP layers -double/triple	

9.10	Thickness of APP film	
9.11	Width of APP film	
9.12	Thickness of Al foil	
9.13	Width of Al foil	
9.14	Active width of Al foil	
9.15	Maximum voltage stress per APP layer	
9.16	Element connection method	
9.17	Discharge device	
10	Capacitor bank maximum permissible over voltage	
11	Capacitor power loss at rated voltage	
12	Capacitor tan delta (Tangent of power loss angle) at maximum operating conditions	
13	Guaranteed temperature rise of capacitor above ambient temperature	
14.1	Type of discharge device – internal resistor	
14.2	Discharge device material	
14.3	Value of discharge device	
14.4	Discharge time required to attain residual voltage equal to 50 volts	
15	Capacitor bank overall dimensions	
	Height x Length x Width	
16	Capacitor bank total weight	
17	Capacitor bank clearances	
	i)Phase to Phase	
	ii)Phase to neutral	
	iii)Phase to earth	
18	Tinned copper Bus bar cross-section in sq. mm	

19	Tinned copper Bus bar continuous rating	
20	Bus bar short time withstand capacity in kA for 3sec	
21	Flexible tinned copper connector rating	
22.1	Bus bar support insulator make & type	
22.2	Bus bar support insulator voltage class	
23	Bus bar provided with insulating sleeve and phase barriers?	
24	**Neutral Current transformer**	
24.1	Neutral current transformer make	
24.2	Neutral current transformer outdoor type	
24.3	Cast resin type NCT offered?	
24.4	Neutral current transformer ratio	
24.5	Neutral current transformer accuracy class (0.5 & 5P10min)	
24.6	Neutral current transformer rating(10 & 15VA)	
24.7	Neutral current transformer terminal box ingress protection (IP55min)	
24.8	**Residual Voltage Transformer**	
25	**Series Reactor**	
25.1	Series reactor make	
25.2	Continuous current rating of series reactor	
25.3	Series reactor kVAr rating per phase per star	
25.4	Series reactor rated voltage	
25.5	Type –dry air cooled	
25.6	Short time withstand current capacity for 3sec (min 16 times capacitor rated current at 130% rated voltage)	
25.7	Series reactor single phase unit connected between single phase capacitor units and neural star pint	

25.8	Series reactor power frequency withstand voltage 28Kv MIN	
25.9	Series reactor lightening impulse withstand voltage 75kv min	
26	**Lightning Arrestor**	
26.1	Name of manufacturer	
26.2	Type – Gapless ZnO	
26.3	Rated voltage	
26.4	Nominal Discharge Current	
26.5	Class - III	
26.6	Insulation withstand voltage	
26.7	Crrepage distance	
27	**Vacuum Contactor / switch for Auto Switching**	
27.1	Rated Voltages	
27.2	Rated Continuous Current	
27.3	Rated Capacitor Switching Current	
27.4	Frequency	
27.5	Control supply	
27.6	Type	
27.8	Installation	
27.9	Mechanical Endurance	
27.10	Electrical Endurance	
27.11	Mechanical Indicator	
27.12	Trip lever	
27.13	Closing lever	
28	**Isolator**	

28.1	Name of manufacturer	
28.2	Isolator ratings	
28.3	Type of operation	
28.4	Type	
28.5	Operating mechanism	
28.6	Voltage rating	
28.7	Rated current	
28.8	No.of poles	
28.9	Rated short time current	
28.10	Type of mounting	
28.11	Construction	
28.12	Earth switch provided	
28.13	Auxiliary contacts provided	
28.14	Electrical interlocks	
28.15	Mechanical interlocks	
28.16	Creepage distance	
28.17	Insulation level - Power frequency hstand Voltage - Impulse withstand voltage	
28.18		
	Terminal arrangement a) Incoming suitable for b) Outgoing suitable for	
28.19	Overload capacity	
28.20	Control voltage	
29	Name plate and labels as per specification?	

30	Painting of capacitor and mesh enclosure	
30.1	Shade RAL 7032	
30.2	Material – Pure polyester grade A	
30.3	Minimum thickness (80 microns)	
31	Power cable terminal suitable for 3CX300Sqmm XLPE HT	
32	Space provided for future capacity	

Bidders Name : _____
Signature : _____
Name : _____
Designation : _____
Seal of Company Date : _____

SCHEDULE – C7

LT POWER CABLES

For each size / rating separate GTP need to be furnished.			
S.No.	**Description**	**Buyer's requirement**	**Seller's Data**
1	Make	……	
2	Type (AS PER IS)	A2XFY (Multicore)	
3	Voltage Grade (KV)	1.1	
4	Maximum conductor temperature		
A	Continuous (^{0} C)	90 ^{0}C	
B	Short time (^{0} C)	250 ^{0}C	
5	Conductor		
A	Size (mm^2)	4CX300,4CX50, 4CX25, 4CX10 & 2CX10 Sqmm	
B	No. of wire in each conductors Nos.	As per Manufacturer standard	
C	Dia of wires in each conductors before compaction (mm)	As per Manufacturer standard	
D	Shape of conductor	As per specification	
E	Diameter over conductor (mm)	……	
F	Maximum conductor resistance at 20^0 C (ohm / km)	As per table 2 of IS -7098 Part -1	
6	Insulation		
A	Nominal thickness (mm)	As per table 3 of IS -7098 Part -1	
B	Minimum thickness (mm)	……	
C	Diameter over insulation (mm) Approx	……	
7	Inner Sheath		
A	Minimum thickness	As per table 5 of IS -7098 Part -1	
B	Approx dia over sheath (mm) Approx	……	
8	Galvanized steel Armour	As per table 6 of IS -7098 Part -1	
A	Number of strips	As per manufacturer Std.	
B	Size (Thickness X width) in mm	0.8 x 4	
C	Dia of wire for 2CX10sqmm	1.4mm Min	
D	Dia over Armour -Approx	……	
9	Outer Sheath	As per table 8 of IS -7098 Part -1	
A	Thickness (Minimum)		
B	Colour	Yellow	
C	Weather proof paint (applicable for 2c x 10 sqmm and 4c x 10 sqmm only)	……	
10	Approx. overall dia (mm)	……	
11	End Cap	Required	
12	Continuous current rating for standard I.S. condition laid Direct		

	a. In ground 30 ^{0}C Amps	……	
	a. In duct 30 ^{0}C Amps	……	
	a. In air 40 ^{0}C Amps	……	
13	Short circuit current for 1 sec of conductor (KAmp)	……	
14	Electrical Parameters at Maximum operating temperature		
A	Resistance (Ohm / Km) (AC Resistance)	……	
B	Resistance AT 50 C/s (Ohm / Km)	……	
C	Impedance (Ohm / Km)	……	
D	Capacitance (Micro farad /Km)	……	
15	Recommended minimum bending radius	…….. X O/D	
16	De-rating factor for following Ambient Temperature in	Ground /Air	
	a. At 30 ^{O}C		
	a. At 35 ^{O}C		
	a. At 40 ^{O}C		
	a. At 45 ^{O}C		
	a. At 50 ^{O}C		
17	Group factor for following Nos. of cables laid	Touching Trefoil	
A	3 Nos.		
B	4 Nos.		
C	5 Nos.		
D	6 Nos.		
18	Process of cross linking of polyethylene	Dry cure	

Bidders Name : _____

Signature : _____

Name : _____

Designation : _____

Seal of Company

Date : _____

SCHEDULE – C8

CONTROL CABLES

Sr.	Description	Buyer's requirement	Seller's Data
	Purchase Req. No.	….	
	Guarantee Period: 5 Years	60/66 Months	
1.0	Make	….	
2.0	Type (AS PER IS 1554 part -1)	YWY	
3.0	Voltage Grade (KV)	1.1	
4.0	Maximum Conductor temperature		
A	Continuous (° C)	70°C	
B	Short time (° C)	160°C	
5.0	Conductor		
A	Size (mm2)	2.5 / 4 sq mm	
B	No. of wires in each conductor Nos.	As per Manufacturer standard	
C	Dia. of wires in each conductor before compaction (mm)	As per Manufacturer standard	
D	Shape of Conductor	As per Cl.2.1.1 of specification	
E	Diameter over conductor mm	….	
F	Maximum Conductor resistance at 20 ° C (Ohm/Km)	As per Table 2 of IS 8130	
6.0	Insulation	As per Table 1 of IS:5831 – 1984	
A	Nominal thickness (mm)	As per Cl.2.1.2 of specification & Table 2 of IS 1554(Part-1)	
B	Minimum thickness (mm)		
C	Core Identification	Color of all the cores shall be different	
D	Diameter over Insulation (mm) Approx.	….	

7.0	Inner Sheath	As per Table 2 of IS:5831 – 1984	
A	Minimum thickness (mm)	As per Table 4 of IS 1554(Part-1)	
B	Approx. dia. Over sheath (mm)- Apprx.	….	
8.0	Galvanized Steel Armour	As per Cl 2.1.5 of specification	
A	Number of armour wire	As per Manufacturer Std.	
B	nal Dia of Round Wire	As per Table 5 of IS 1554(Part-1)	
C	Dia. over Armour – Approx.	….	
D	Lay Ratio	….	
E	Confirm minimum 90% coverage (submit calculation)		
9.0	Outer Sheath (FRLS)	As per Table 2 of IS:5831 – 1984	
A	Thickness (Minimum)	As per Table 7 of IS 1554(Part-1)	
B	Color	Black	
10.0	Approx. overall dia. (mm)	….	
11.0	Drum Length & tolerance	As per Spec.Cl. 6.0.0	
12.0	End Cap	Required	
13.0	Drums provide with MS Spindle plate & Nut bolts arrangement	Required	
14.0	Net Weight of cable (Kg/Km.) – Approx.	….	

15.0	Continuous current rating for standard I.S. condition laid Direct		
	a) In ground 30° C Amps	….	
	b) In duct 30° C Amps	….	
	c) In Air 40° C Amps	….	
16.0	Short circuit current for 1 sec of conductor. (KAmp)	….	
17.0	Electrical Parameters at Maximum Operating temperature:		
A	Resistance (Ohm/Km) (AC Resistance)	….	
B	Reactance at 50 C/s (Ohm/Km)	….	
C	Impedance (Ohm/Km)	….	
D	Capacitance (Micro farad / KM)	….	
18.0	Recommended minimum bending radius	…. x O/D	
19.0	FRLS Properties		
	i) Oxygen Index		
	ii) Temperature Index		
	iii) Max Acid Gas Generation		
	iv) Light Transmission / Smoke Density		

Bidders Name : _____

Signature : _____

Name : _____

Designation : _____

Seal of Company Date : _____

SCHEDULE – C9

ILLUMINATION SYSTEM

1	**General**			
+1.01	Make			
*1.02	Applicable Standards			
*1.03	Degree of protection			
2	**Lighting Panel /Feeder Pillarm Box (LP/ELP/DLP/FPB/EPB/LDB/ELDB/ Construction Features)**			
2.01	Make			
2.02	Rated Value (V)			
*2.03	Busbar continuous current rating (A)			
*2.04	Busbar material and cross section	1	2	3
3	**Minimum current breakers :**			
+3.01	Service			
3.02	Make			
+3.03	Type			
*3.04	No. of poles			
*3.05	Rated continuous current (A)			
*3.06	Short time current rating (Ka)			
*3.07	Related Voltage (V)			
*3.08	Breaking Current (Ka)			
4	**Load Breaking Switches**			
4.01	Service			
+4.02	Make			
+4.03	Type			
*4.04	No. of poles			
*4.05	Related Voltage (V)			
*4.06	Rated continuous current (A)			
*4.07	Rated making current (Ka peak)			
*4.08	Rated breaking current (Ka)			
*4.09	Rated short time one (1) second current (Ka)			
*4.10	Rated dynamic current (kApeak)			
5	**Fuses**			
5.01	Service			
+5.02	Make			
*5.03	Type			
*5.04	Standard applicable			
*5.05	Related Voltage (V)			
*5.06	Rated current (A)			
*5.07	Fusing factor			

*5.08	Category of duty			
*5.09	Rupturing capacity (prospective current) (Ka)			
6	**Earth Leakage current Breaker**			
+6.01	Make			
+6.02	Type			
*6.03	No. of poles			
*6.04	Rated continuous current (A)			
6.05	Short time current rating (Ka)			
6.06	Rated Tripping current			
7	**Lighting Fixtures**	Type A	B	C
+7.01	Manufacturer			
+7.02	Type			
7.03	Description of different types			
*7.04	Type and wattage of lamp			
*7.05	Rated life of the lamp			
*7.06	Applicable standards			
	Note:- In case luminaries other than the ones specified in specification are offered, all the deviations shall be listed out otherwise these shall be considered as being fully in line with luminaries specified.			
8	**Receptacles with Switches**	1	2	3
+8.01	Make			
+8.02	Type			
+8.03	Related Voltage (V)			
*8.04	Rated current (A)			
8.05	Technical brochures (Attach brochures and state brochure Nos.)			
9	**Cables / Wire**	1	2	3
9.01	Service			
+9.02	Make			
+9.03	Type			
*9.04	Voltage Grade (V)			
*9.05	Conductor Material			
*9.06	Size of conductors (mm^2)			
*9.07	Current rating of conductors (A)			
9.08	Applicable Standards			
10	**Conduits and Accessories**			
10.01	Make			
10.02	Type			
10.03	Material			
10.04	Applicable Standards			
11	**Lamp and Luminaries**	Incandescent Lamps	Fluorescent Tubes	HPSV Lamps
11.01	Make			

11.02	Type			
*11.03	Lumen output throughout life (Lumen)			
*11.04	Derating factor due to temperature			
*11.05	Derating factor due to aging			
12	**Lighting Poles / Towers**			
12.01	Manufacturer			
12.02	Applicable Standards			
12.03	Material and Painting			
12.04	Height			

Notes :

1. Single asterisk (*) marked particulars are guaranteed.
2. Other particulars are bonafide and may vary slightly upon completion of detailed design.
3. Particulars against items marked * and + shall be furnished with the Bid.

Bidders Name : _____

Signature : _____

Name : _____

Designation : _____

Seal of Company Date : _____

SCHEDULE – C10

AC DISTRIBUTION BOARDS

S.No	Description	Buyers Requirement	Sellers Data
1	**Panel Construction**		
1.1	Enclosure Type	Free standing, indoor, Fully compartmentalized, Metal clad, Vermin Proof	
1.2	Enclosure degree of protection	IP 5X	
1.3	Enclosure Material	CRCA steel	
1.4	Load bearing members	Minimum 2.5 mm thick	
1.5	Doors and covers	Minimum 2.0 mm thick	
1.6	Gland Plate (detachable type)	3.0mm MS detachable type or Aluminum 5.0mm for single core cables	
1.7	Separate compartment for	Bus bar, circuit breaker, incoming cable, outgoing cable PT, LV instruments.	
1.8	Breaker compartment door	Separate with lockable handle	
1.9	Fixing arrangement i. Doors ii. Covers iii. Gasket	 Concealed hinged Bolted with SS bolts Neoprene	
1.10	Panel Base Frame	Steel base frame as per manufacturer's standard.	
1.11	Handle	Removable bolted covers for cable chamber and busbar chamber shall be provided with "C" type handles	
1.12	Space Heater	Required	
1.13	Panel extension possibility	Required	
2	**MCCB**		
2.1	Mounting	Flush Mounted	
2.2	Rated Operational Voltage(V)	415 volt	
2.3	Ultimate breaking Capacity		
2.3.1	630A MCCB	As per requirement	
2.3.2	100A MCCB	As per requirement	
2.4	Rated Service breaking capacity at rated voltage Ics	Ics =100% Icu	
2.5	Rotary handle	Required	
2.6	Interlocking arrangement	Between Incomer MCCBs	
2.7	Trip time	As per requirement	
2.8	Test Certificates	Should have test certificates for breaking capacities from independent test authorities	

		CPRI / ERDA or equivalent	
3	**MCB**		
3.1	Rated Operational Voltage(V)	415 VAC 50 Hz	
3.2	Protection relay/Release	Magnetic thermal release for over current and short circuit protection	
3.3	Breaking capacity	Shall not be less than 10 KA at 415 VAC	
3.4	Mounting	Din mounted	
3.5	MCB classification	As required	
3.6	ISI Marked	The complete range shall be ISI marked	

Bidders Name : _____

Signature : _____

Name : _____

Designation : _____

Seal of Company Date : _____

SCHEDULE – C11

STATION AUXILIARY TRANSFORMER

Sr.	Particulars	Specified / Required	Offered
1.0	General		
1.1	Make		
1.2	Type	Oil immersed, core type, step down located generally outdoor but may be located indoor also with poor ventilation. Bidder shall confirm full rating available in indoor location also	
2.0	Nominal Continuous Rating, KVA		
2.1	HV winding	400kVA	
2.2	LV winding	400kVA	
3.0	Rated voltage (kV)		
3.1	HV Winding	11 kv	
3.2	LV Winding	433 volt	
4.0	Rated current (Amps)		
4.1	HV Winding		
4.2	LV Winding		
5.0	Connections		
5.1	HV Winding	Delta	
5.2	LV Winding	Star with neutral	
5.3	Vector Group reference	Dyn11	
6.0	Impedance at principal tap rated current and frequency, ohm @75 deg C		
6.1	Impedance	5.0 % with IS tolerance	

6.2	Reactance		
6.3	Resistance		
6.4	Impedance at lowest tap at rated current and frequency		
6.5	Impedance at highest tap at rated current and frequency		
7.0	Resistance of the winding at 75^0 C in ohm		
7.1	a) HV		
7.2	b) LV		
8.0	Zero sequence impedance in ohm		
8.1	a) HV		
8.2	b) LV		
9.0	Guaranteed maximum losses at principal tap full load and 75°C without any positive tolerance, kW		
9.1	No load losses (max.)	0.7	
9.2	Load losses (max.)	5.1	
9.4	Total I^2R losses of windings @ 75 deg C, KW		
9.5	Total stray loses @ 75 deg C, KW		
9.6	Total losses (max.), KW	5.8	
9.7	No load loss at maximum permissible voltage and frequency (approx.),kW		
10.0	Temperature rise over reference ambient of 50 ^{0}C		
10.1	Top oil by thermometer ^{0} C	40 ^{0}C	
10.2	Winding by resistance ^{0} C	45 ^{0}C	

11.0	Efficiency		
11.1	Efficiency at 75^0C and unity power factor %		
11.1.1	at 110% load		
11.1.2	at 100% load		
11.1.3	at 80% load		
11.1.4	at 60% load		
11.1.5	at 40% load		
11.1.6	at 20% load		
11.2	Efficiency at 75^0C and 0.8 power factor lag %		
11.2.1	at 110% load		
11.2.2	at 100% load		
11.2.3	at 80% load		
11.2.4	at 60% load		
11.2.5	at 40% load		
11.2.6	at 20% load		
11.3	Maximum efficiency at 75^0C %		
11.4	Load and power factor at which it occurs		
12.0	Regulation , (%)		
12.1	Regulation at full load at 75^0 C		
12.1.1	at unity power factor		
12.1.2	at 0.8 power factor lagging		
12.2	Regulation at 110% load at 75^0 C		
12.2.1	at unity power factor		
12.2.2	at 0.8 power factor lagging		
13.0	Tappings		

13.1	Type	Off Circuit taps on HV winding	
13.2	Capacity	Full capacity	
13.3	Range-steps x % variation	+5% to -5% @ 2.5%	
13.4	Taps provided on HV winding (Yes / No)	Yes.	
13.5	Rated current of rotary switch	60 A	
14.0	Cooling system	-	
14.1	Type of cooling	ONAN	
14.2	No. of cooling unit Groups		
14.3	Capacity of cooling units		
14.4	Mounting of radiators		
14.5	Number of Radiators		
14.8	Total radiating surface , sqmm		
14.9	Thickness of radiator tubes, mm	Minimum 1.2 mm	
15.0	Details of Tank		
15.1	Material	Robust mild steel plate without pitting and low carbon content	
15.2	Thickness of sides mm		
15.3	Thickness of bottom mm		
15.4	Thickness of cover mm		
15.5	Confirmation of Tank designed and tested for Vacuum, Pressure (Ref: CBIP Manual) , (Yes/ No)		
15.5.1	Vacuum mm of Hg. / (kN/m^2)	As per CBIP	
15.5.2	Pressure mm of Hg.	Twice the normal head of oil / normal pressure + 35kN/m^2 whichever is lower, As per CBIP	
15.6	Is the tank lid sloped?	Yes	
15.7	Inspection cover provided (Yes / No)	as per clause 4.2.1.5	
15.8	Location of inspection cover (Yes / No)		
15.9	Min. dimensions of inspection cover (		

	provide list of all inspection cover with dimension), mm x mm		
16.0	Core		
16.1	Type:	Core	
16.2	Core material grade	Premium grade minimum M4	
16.3	Core lamination thickness in mm	0.27 Max	
16.4	Insulation of lamination	With insulation coating on both sides	
16.5	Design flux density at rated condition at principal tap, Tesla		
16.6	Maximum flux density at 10 % overexcitation /overfluxing, Tesla	1.9 Tesla	
16.7	Equivalent cross section area mm²		
16.8	Guaranteed No Load current at 100% rated voltage , Amps		
16.8.1	HV		
16.8.2	LV		
16.9	Guaranteed No Load current At 110% rated voltage, Amps		
16.9.1	HV		
16.9.2	LV		
17.0	Type of Winding		
17.1	HV		
17.2	LV		
17.3	Conductor material	Electrolytic Copper	
17.4	Current density (HV/LV)	Maximum allowed 3.0 A per sqmm. At any tap	
17.5	Gauge/area of cross section of conductor		
17.5.1	a) HV		
17.5.1	b) LV		

17.6	Insulating material		
17.6.1	HV Turn		
17.6.2	LV Turn		
17.6.3	LV Core	-	
17.6.4	HV - LV	-	
17.7	Insulating material thickness, mm		
17.7.1	HV Turn		
17.7.2	LV Turn	-	
17.7.3	LV to Core		
17.7.4	HV to LV		
		-	
18.0	Minimum design clearance, mm		
18.1	HV to earth in Air		
18.2	HV to earth in oil		
18.3	LV to earth in Air		
18.4	LV to earth in oil		
18.5	Between HV & LV in Air		
18.6	Between HV & LV in oil		
18.7	Top winding and yoke		
18.8	Bottom winding and yoke		
19.0	Insulating oil		
19.1	Quantity of oil Ltrs		
19.1.1	In the Transformer tank		
19.1.2	In each radiator		
19.1.4	Total quantity		
19.2	10% excess oil furnished?	Yes	
19.3	Type of Oil	As per BSES Spec Annex -C	
20.0	Bushing / Support Insulator		
20.1	Make	-	
20.2	Type		

20.2.1	HV side	As per Cl. 3.2.7.1 of the spec	
20.2.2	LV side	As per Cl. 3.2.7.2 of the spec	
20.3	Reference Standard		
20.4	Voltage class, kV		
20.4.1	HV side Bushing/ Support Insulator	12 kV	
20.4.2	LV side line and neutral bushing/ Support Insulator	1.1 kV	
20.5	Creepage factor for all bushing / Support Insulator mm/KV	31 mm / kV	
20.6	Rated thermal short time current		
20.6.1	HV bushing	25 times rated current for 2 secs.	
20.6.2	LV line and neutral bushing	25 times rated current for 2 secs.	
20.7	Weight, Kg		
20.7.1	HV bushing		
20.7.2	LV line and neutral bushing		
20.8	Free space required for bushing removal, mm		
20.8.1	HV bushing		
20.8.2	LV line and neutral bushing		
21.0	Terminal connections		
21.1	HV	Cable size as per annexure A 22.0	
21.2	LV	Cable size as per annexure A 23.0	
21.3	LV Neutral	Cable size as per annexure A 23.0	
22.0	H.V. Cable box	Required	
22.1	Suitable for cable type , size	As per annexure A cl. 22.0	
22.2	Termination height, mm	750 mm, minimum	
22.3	Gland Plate dimension, mm x mm		
22.4	Gland Plate material	Aluminium	
22.5	Gland Plate Thickness, mm	5 mm minimum	
22.5	Phase to phase clearance inside box, mm	180 mm	
22.6	Phase to earth inside box, mm	120 mm	

22.7	HV Cable Box Protection Class	IP 55	
23.0	L.V Cable termination arrangement	With cable box	
23.1	Suitable for cable type , size	Cable size as per annexure A cl. 23.0	
23.2	Termination height, mm	1000 mm, minimum	
23.3	Gland Plate dimension, mm x mm		
23.4	Gland Plate material	Aluminium	
23.5	Gland Plate Thickness, mm	5 mm minimum	
23.5	Phase to clearance inside box, mm	25 mm minimum	
23.6	Phase to earth inside box, mm	25 mm minimum	
23.7	LV Cable Box Protection Class	IP 55	
24.0	L.V neutral Cable termination arrangement	Separate cable box not required	
25.0	Current Transformer on LV phases		
25.1	Type		
25.2	Make		
25.3	Reference Standard		
25.4	CT Ratio	As per annexure C cl 21.0	
25.5	Burden, VA	As per Cl. 3.2.9.5 of the spec.	
25.6	Class of Accuracy	As per Cl. 3.2.9.4 of the spec.	
25.7	CT terminal box size	As per Cl. 3.2.9.8.1 of the spec.	
26.0	Pressure release device		
26.1	Minimum pressure the device is set to rupture		
26.1.1	For Main Tank		
27.0	Fittings Accessories Each Transformer furnished as per Clause No 5. (Bidder shall attach separate sheet giving details, make and bill of materials)		

28.0	Painting: as per clause for the transformer, cable boxes, radiator, Marshalling box (Yes/No)		
29.0	Over all transformer dimensions		
29.1	Length, mm	1700	
29.2	Breadth, mm	1500	
29.3	Height, mm	1700	
30.0	Transformer Tank Dimensions		
30.1	Length, mm		
30.2	Breadth, mm		
30.3	Height, mm		
31.0	Weight data		
31.1	Core, kG		
31.2	Frame parts, kG		
31.3	Core and frame, kG		
31.4	Total Winding, kG		
31.5	Core , Frame, Winding, kG		
31.6	Tank, kG		
31.7	Tank lid, kG		
31.8	Empty conservator tank, kG		
31.9	Each radiator empty, kG		
31.10	Total weight of all radiators empty, kG		
31.11	Weight of oil in Tank, kG		
31.12	Weight of oil in Conservator, kG		
41.13	Weight of oil in each Radiators, kG		
31.14	Total weight of oil in Radiators, kG		
31.16	Total Transport weight of the transformer, kG		
32.0	Volume Data		

Schedules & Annexure **Schedule C11**

32.1	Volume of oil in main tank, litres		
32.2	Volume of oil between highest and lowest levels of main conservator, litres		
32.4	Volume of oil in each radiator, litres		
32.5	Total volume of oil in radiators, litres		
32.7	Transformer total oil volume, litres		
33.0	Shipping Data		
33.1	Weight of heaviest package, kG		
33.2	Dimensions of the largest package (L x B x H) mm		
34.3	Tests		
34.1	All in process tests confirmed as per Cl. (Yes/ No)		
34.2	All Type Tests confirmed as per Cl. (Yes / No)		
34.3	All Routine Tests confirmed as per Cl. (Yes/ No)		
34.4	All Special Tests confirmed as per Cl. (Yes/ No)		

Bidders Name : _____
Signature : _____
Name : _____
Designation : _____
Date : _____

Seal of Company

SCHEDULE – C12

GROUNDING & LIGHTNING PROTECTION SYSTEM

S.No.	Description	Unit	Data by vendor
1	**Earth mat**		
a	Material		
b	Size of conductor		
c	Fault withstand current & duration		
2	**Equipment Earthing**		
a	Material		
b	Size of conductor		
3	**Earth Electrode**		
a	Material		
b	Size		
c	Length		
4	**Lightning Protection System**		
a	Material and size of horizontal air termination		
b	Material and size of vertical air termination		
c	Material and size of down conductor		
d	Size of test link		
e	Material of enclosure for test link		
f	Material and size of earth electrode		

Bidders Name : _____

Signature : _____

Name : _____

Designation : _____

Seal of Company Date : _____

SCHEDULE – C13

CABLE ACCESSORIES

1	Cable Accessories	
1.01	Makes	
1.02	Termination kits	
1.03	Straight through joint kits	
1.04	Cable glands	
1.05	Cable lugs	
1.06	Termination blocks	
1.07	Types	
1.08	Termination kits	
1.09	Straight through joints	
1.1	Cable glands	
1.11	Cable lugs	
1.12	Terminal blocks	

Bidders Name : _____

Signature : _____

Name : _____

Designation : _____

Seal of Company Date : _____

SCHEDULE – C14

CABLE TRAYS, ACCESSORIES AND TRAY SUPPORT, CONDUITS, PIPES AND DUCTS

1	**General**	
a	Name of the Contractor	
b	Name of sub contractors, if any	
c	Applicable standards	
2	**Cable Trays and Fittings**	
a	Cable Trays and Fittings	
i.	Make	
ii.	Type	
iii.	Material	
	1. Thickness (mm)	
	2. Thickness of galvanization (microns)	
	3. Zinc coating per sq meter (gms)	
3	**Conduits , Fitting and Accessories**	
a	Pipes with fitting	
i.	Make	
ii.	Type	
iii.	Material	
	1. Thickness (mm)	
	2. Thickness of galvanization (microns)	
b	Flexible conduits with fittings and accessories	
i.	Make	
ii.	Type	
iii.	Material	
	1. Thickness (mm)	
	2. Thickness of galvanization (microns)	

Bidders Name : _____

Signature : _____

Name : _____

Designation : _____

Seal of Company Date : _____

SCHEDULE – C15

GAS INSULATED SWITCHGEAR

Proposed Technical data 66 k V Gas insulated switchgear

Sr. No.	Description		Proposed Data
1.0	Manufacturer		
2.0	Country of origin		
3.0	Type designation		
4.0	Indoor or outdoor		
5.0	Applied standard, publication number and year		
6.0	Segregated-phase type or common enclosure type		
7.0	Rate voltage	kV rms	
8.0	Number of phase		
9.0	Rated lightning impulse withstand voltage	kV peak	
9.1	phase to earth		
9.2	phase to phase		
9.3	across open contact		
10.0	Rated 1 min power-frequency withstand voltage	kV rms	
11.0	Auxiliary circuit 50HZ, 1 min withstand voltage		
12.0	Rated frequency	Hz	
13.0	Rated short time withstand current	kA	
14.0	Rated peak withstand current	kA	
15.0	Degree of protection for auxiliary and control circuit		
16.0	Rated supply voltage of closing and opening device	Vdc	
17.0	Permissible ambient temperature	**0C**	

18.0	Maximum temperature rise at.....A		
19.0	Material of enclosure	Al/alloy/steel	
20.0	Average Thickness	mm	
21.0	Guarantee SF6 gas losses per compartment per year	%	
22.0	Design Maintenance period		
23.0	Rated SF6 gas pressure at 20 **0C**		
24.0	Minimum safe gas pressure at 20**0C** required for safe operation		
25.0	Setting of pressure relief device (20 **0C**)		
26.0	Emergency operation at rated voltage and	yes/no	
27.0	No. of Gas Compartment		
27.1	Bus Bar		
27.2	**Feeder**		
28.0	Heat losses per feeder at rated power	KW	
29.0	Bay width	mm	
30.0	Volume of gas contained in each compartment	M3	
31.0	Burn through time of enclosure for internal fault of 31.5KA	Sec	
32.0	Weight per bay (ready for operation)	Sec	
33.0	Heaviest part	Kg	
34.0	Net total weight	Kg	
35.0	Packing detailed drawing number (to be attached)	Kg	
CIRCUIT BREAKER			
1.0	Manufacturer		

2.0	Country of manufacture		
3.0	Type designation, number of pole		
4.0	Indoor or outdoor		
5.0	Applied standard, publication number and year		
6.0	Catalog number (to be attached)		
7.0	Outline drawing number (to be attached)		
8.0	Rated voltage	kV	
9.0	Rated lightning impulse withstand voltage	kV peak	
10.0	Rated 1 min power-frequency withstand voltage	kV rms	
11.0	Rated frequency	Hz	
12.0	Rated normal current	A	
13.0	Rated short-circuit breaking current	kA	
14.0	Rated short-circuit making current	kA	
15.0	Rated duration of short-circuit	s	
16.0	Rated operating sequence		
17.0	Short-time withstand current, 3 sec	kA	
18.0	Total break time	ms	
19.0	Rated capacitive breaking current	A	
20.0	Rated small inductive breaking current	A	
21.0	Rated out-of-phase breaking current	A	
22.0	Switching over current factor	pu	
23.0	Rated characteristics of short line faults		

23.1	TRV of supply circuit		
23.2	TRV peak value uc		
23.3	time delay td		
24.0	Opening time		
24.1	Maximum		
25.0	Maximum closing time		
26.0	Maximum make time		
27.0	Minimum dead time		
28.0	Gas operating pressure		
28.1	Rated pressure at..... **0C**	Kg/cm	
28.2	Alarm pressure at..... **0C**	Kg/cm	
28.3	Lock out pressure at..... **0C**	Kg/cm	
29.0	Contacts		
29.1	Type of contact		
29.2	Material		
29.3	Surface treatment		
29.4	Maximum temperature rise at.....A	**0C**	
30.0	Guaranteed contact life in terms of number of operation		
31.0	Operating mechanism		
31.1	Type		
31.2	Method of operation (hydraulic, pneumatic or motor operated spring charging)		
31.3	Mechanical life in terms of number of operation		

31.4	Method of interlocking		
31.5	Number of auxiliary contacts, NO/NC		
31.6	Rated voltage of tripping, closing and		
31.7	interlocking coil	vdc	
31.8	Method of interlocking		
32.0	Motor		
32.1	Rated voltage		
32.2	Voltage range in % of rated		
32.3	Number of phase		
32.4	Frequency		
32.5	Power		
33.0	Number of operations within one maintenance period		
33.1	At rated normal current	Recommended	
33.2		Maximum	
33.3	At Rated Breaking capacity	Recommended	
33.4		Maximum	
33.5	Accumulated current per one set	KA	
33.6	Static weight complete set	Kg	
33.7	Dynamic weight complete set	Kg	
33.8	Detailed complete set of drawing to be attached		

CONDUCTOR

S.No.	**Description**		**Proposed Data**	
			Line & Bus coupler	**Transformer Bays**

			Bays	
1.0	Manufacturer			
2.0	Country of manufacture		k V	
3.0	Type designation, number of pole		K V peak	
4.0	Indoor or outdoor		kV rms	
5.0	Applied standard, publication number and year		Hz	
6.0	Catalog number (to be attached)		A	
7.0	Outline drawing number (to be attached)			
8.0	Material			
9.0	Rated voltage			
10.0	Rated lightning impulse withstand voltage			
11.0	Rated 1 min power-frequency withstand voltage			
12.0	Voltage			
13.0	Rated normal current			
14.0	Rated short time withstand current, 1sec.	kA		
15.0	Rated Peak withstand current	Amp		
16.0	Rated capacitive current	Amp		
17.0	Gas operating pressure			
18.0	Rated pressure at..... **0C**	kg/cm		
19.0	First stage alarm pressure at..... **0C**			
20.0	Second stage alarm pressure at..... **0C**			
21.0	Material (Copper or aluminum)			
22.0	Packing detailed drawing number(to be attached)			

DISCONNECTOR				
S.NO.	Description		Proposed Data	
			Bus Disconnector	Other Disconnector
1.0	Manufacturer			
2.0	Country of manufacturer			
3.0	Type designation, number of poles, indoor or outdoor			
4.0	Applied standard, publication number and year			
5.0	Catalog number (to be attached)			
6.0	Outline drawing number (to be attached)			
7.0	Rated voltage	kV		
8.0	Rated lightning impulse withstand voltage			
8.1	To earth and betweenpole	kV peak		
8.2	Across isolating distance	kV peak		
9.0	Rated power frequency withstand voltage, 1 min			
9.1	To earth and between pole	kV rms		
9.2	Across isolating distance	kV rms		
10.0	Rated frequency			
11.0	Rated normal current			
12.0	Rated short time withstand current , 3 sec.	kA		
13.0	Rated duration of short circuit	s		
14.0	Rated peak withstand current	kA peak		

15.0	Rated capacitive breaking current and recovery voltage	A, kV	
16.0	Rated inductive breaking current and recovery voltage	A, kV	
17.0	Closed loop current switching	A, V	
18.0	Gas operating pressure	kA	
18.1	Rated pressure at..... **0C**	kg/cm	
18.2	First stage alarm pressure at..... **0C**	kg/cm	
18.3	Second stage alarm pressure at..... **0C**	kg/cm	
19.0	Contact		
19.1	Type		
19.2	Material		
19.3	Surface treatment		
19.4	Temperature rise at..... **0C**		
20.0	Operating mechanism		
20.1	Type		
20.2	Method of operation		
20.3	Method of interlocking		
20.4	Operating time, close/open	s	
20.5	Number of auxiliary contact, NO/NC		
20.6	Power requirement	W	
20.7	Rated supply voltage	Vac/phase	
	Rated supply frequency	Hz	
	Recommended maintenance period	Year	
	Packing detailed drawing number(to be attached)		

Earthing Switch

S.No.	**Description**		**Proposed Data**

			High Speed	Slow Acting
1.0	Operating speed			
2.0	Manufacturer			
3.0	Country of manufacturer			
4.0	Type designation, number of poles, indoor or outdoor			
5.0	Applied standard, publication number and year			
6.0	Catalog number(to be attached)			
7.0	Outline drawing number(to be attached)			
8.0	Rated voltage	k V		
9.0	Rated lightning impulse withstand voltage	k Vpeak		
10.0	Rated power frequency withstand voltage, 1 min.	k Vrms		
11.0	Rated frequency	Hz		
12.0	Rated short- circuit making current	A		
13.0	Guranteed number of short-circuit making operation			
14.0	Rated short-time withstand current			
15.0	Rated duration of short circuit			
16.0	Rated peak withstand current			
17.0	Gas operating pressure			
17.1	Rated pressure at..... **0C**			
17.2	First stage alarm pressure at..... **0C**			
17.3	Second stage alarm pressure at..... **0C**			
18.0	Contact			
18.1	Type			
18.2	Material			

18.3	Surface treatment			
18.4	Temperature rise at.....A			
19.0	Operating mechanism			
19.1	Type			
19.2	Method of operation			
19.3	Method of interlocking			
19.4	Operating time, close/open			
19.5	Number of auxiliary contact, NO/NC			
19.6	Power requirement	W		
20.0		Vac /Phase		
20.1	Rated supply voltage	Vdc		
20.2	Rated supply frequency	Hz		
21.0	Interrupting capability			
21.1	Inductive current			
21.2	Interrupting current			
21.3	Recovery voltage			
22.0	Capacitive current			
22.1	Interrupting current			
22.2	Recovery voltage			
22.3	Recommended maintenance period			
23.0	Packing detailed drawing number (to be attached)			
24.0	Interrupting capability			

VOLTAGE TRANSFORMER

S.NO.	Description		Proposed Data	
1.0	Manufacturer			
2.0	Country			
3.0	Type designation, number of phases			

4.0	Applied standard, publication number and year				
5.0	Catalog number (to be attached)				
6.0	Outline drawing number (to be attached)				
7.0	Rated voltage	k V			
8.0	Rated Lightning impulse withstand voltage	k V peak			
9.0	Rated power frequency withstand voltage, 1 min	kV rms			
10.0	Rated frequency	Hz			
11.0	Rated burden	VA			
12.0	Rated second voltage	V			
13.0	Metering core				
13.1	Rated output and accuracy class				
13.2	Rated transformation ratio				
13.3	Rated voltage factor				
14.0	Protective core				
14.1	Rated output and accuracy class				
14.2	Rated transformation ratio				
14.3	Rated voltage factor				
15.0	Class of insulation and material	**0C**			
16.0	Maximum temperature rise at.....A	kg			
17.0	Net weight				
18.0	Packing detailed drawing (to be attached)				
Current Transformer					
S.No.	**Description**		**Proposed Data**		
			Line	**Bus Coupler**	**Transformer**

			Bay	Bay	Bay
1.0	Manufacturer				
2.0	Country of manufacturer				
3.0	Type designation, number of phases				
4.0	Applied standard, publication number and year				
5.0	Catalog number (to be attached)				
6.0	Outline drawing number (to be attached)				
7.0	Mounted inside GIS enclosure or on power cables				
8.0	Ring type or bushing type				
9.0	Rated voltage	kV			
10.0	Rated lightning impulse withstand voltage	kV peak			
11.0	Rated power frequency withstand voltage, 1 min	kV rms			
12.0	Rated frequency	Hz			
13.0	Rated primary current	A			
14.0	Rated short time thermal current(3s)	kA			
15.0	Rated dynamic current	kA peak			
16.0	Rated continuous thermal current in percentage of rated primary current	%			
17.0	Class of insulation & material				
18.0	Maximum temperature rise at.....A				
19.0	Metering core				
19.1	Rated transformation ratio				
19.2	Rated output and				

	accuracy class				
19.3	Instrument security factor				
20.0	Protection core				
20.1	Rated transformation ratio				
20.2	Rated output and accuracy class				
20.3	Accuracy limit factor				
21.0	Net weight				
22.0	Packing detailed drawing number (to be attached)				

Sealing End

S.No.	Description		Proposed Data
1.0	Manufacturer		
2.0	Standards		
3.0	Material		
4.0	Rated power frequency voltage	Yes / no	
4.1	(1 min/20 □C)	k V	
5.0	Breakdown dielectric stress	k V /mm	
6.0	Maximum working dielectric stress	k V /mm	
7.0	Impulse withstand voltage	k V	
8.0	Creepage distance (minimum)	mm	
9.0	Expansion devices	Yes / no	
10.0	Splicing method of conductor		
11.0	Compound for internal insulation		
12.0	Nominal weight	Kg /pc	

Bay Board

S.No	Description		Proposed Data
1.0	Manufacturer		
2.0	Type		
3.0	Applied standard, publication number and year		
4.0	Confirm to be supplied according to specification	Yes /no	
5.0	Material		
5.1	Steel thickness (minimum)		
5.2	- door	Mm	
5.3	- side/top/near panels	Mm	
6.0	Surface finish	k V /mm	
6.1	Total Paint thickness(Minimum)		
7.0	Dimension		
7.1	Length		
7.2	Width		
7.3	Height		
8.0	Total net weight		
9.0	Packing detailed drawing number(to be attached)		
Type test certification			
Type test made on identical design of equipment to those offered			Proposed Data
a	Circuit breakers		
	Terminal faults: (Test duties 1,2,3,4 and 5		
	to IEC 56) (with a first phase to clear factor of 1.5)		
	Making current		
	Short-time current		

	Dielectric		
	Temperature rise		
	Mechanical endurance		
	Short-line faults (60%, 75%, 90%)		
	Out-of-Phase tests		
	Capacitance switching		
	Low inductive switching		
	Special tests : Parallel switching		
	Partial discharges		
b)	Disconnectors		
	Short-time current	One second	
		Three second	
	Peak current		
	Dielectric withstand		
	Temperature endurance		
	Capacitance switching		
	Peak current		
c)	Busbars and Connections		
	Short-time current	One second	
		Three second	
d)	**Earthing switches**		
	Short-time current	One second	
		Three second	
	Peak current		
	Making current capability Dielectric withstand		
	Dielectric withstand		
	Mechanical endurance		
	Type Tests Made on Identical Designs of		

	Equipment to Those Offered		
	Interrupting capability for line coupling currents :		
	- capacitive currents		
	- inductive currents		
	Peak current		
	Making current capability Dielectric withstand		

Bidders Name : _____

Signature : _____

Name : _____

Designation : _____

Seal of Company Date : _____

SCHEDULE – C16
POWER TRANSFORMER

Sr.No.	Particular	Specified / Required	Offered
1.0	General		
1.1	Make		
1.2	Type	As per Annexure C of specification	
2.0	Nominal continuous rating, KVA		
2.1	HV winding	As per Annexure C of specification	
2.2	LV winding	As per Annexure C of specification	
2.3	Type of Cooling	ONAN/ONAF	
2.4	Rating available at different cooling	ONAN - 80% ONAF-100%	
3.0	Rated voltage (KV)		
3.1	HV winding	As per Annexure C of specification	
3.2	LV winding	As per Annexure C of specification	
4.0	Rated current (Amps)		
4.1	HV winding		
4.2	LV winding		
5.0	Connections		
5.1	HV winding	As per Annexure C of specification	
5.2	LV winding	As per Annexure C of specification	
5.3	Vector group reference	As per Annexure C of specification	
6.0	Impedance at principal tap rated current and frequency at 75 °C with 100 % Rating (%)		
6.1	Impedance (%)	As per Annexure C of specification	
6.2	Reactance (%)		
6.3	Resistance (%)		
6.4	Impedance at lowest tap rated current and frequency at 75 °C with 100 % Rating (%)		
6.5	Impedance at highest tap rated current and frequency at 75 °C with 100 % Rating (%)		
7.0	Resistance of the winding at 75^0Cat principal tap (ohm)		
7.1	a) HV		

7.2	b)LV		
8.0	Zero sequence impedance (ohm)		
8.1	a) HV		
8.2	b) LV		
9.0	Guaranteed maximum losses at principal tap at full load and 75^0 C without any positive tolerance kW		
9.1	No load losses (max.)	As per Annexure C of specification	
9.2	Load losses (max.)	As per Annexure C of specification	
9.3	Cooler fan losses (max.)		
9.4	Total I^2R losses of winding @ 75 deg C		
9.5	Total stray losses @ 75 deg C		
9.6	Total Load losses (max.)		
9.7	No load loss at maximum permissible voltage and frequency (approx.) kW		
10.0	Temperature rise over reference design ambient of 40 ^{0}C		
10.1	Top oil by thermometer ^{0}C	40^0 C	
10.2	Winding by thermometer ^{0}C	45^0 C	
10.3	Winding gradient at rated current ^{0}C		
10.3.1	HV		
10.3.2	LV		
11.0	Efficiency		
11.1	Efficiency at 75^0 C and unity power factor %		
11.1.1	At 110% load		
11.1.2	At 100% load		
11.1.3	At 80% load		
11.1.4	At 60% load		
11.1.5	At 40% load		
11.1.6	At 20% load		
11.2	Efficiency at 75^0 C and 0.8 power factor lag %		
11.2.1	At 110% load		
11.2.2	At 100% load		
11.2.3	At 80% load		
11.2.4	At 60% load		
11.2.5	At 40% load		
11.2.6	At 20% load		
11.3	Maximum efficiency %		
11.4	Load and power factor at which Max efficiency occurs		
12.0	Regulation (%)		
12.1	Regulation at full load at 75^0 C		
12.1.1	At unity power factor		
12.1.2	At 0.8 power factor lagging		
12.2	Regulation at 110% load at 75^0 C		
12.2.1	At unity power factor		
12.2.2	At 0.8 power factor lagging		

Schedules & Annexure **Schedule C16**

13.0	Tapping		
13.1	Type		
13.2	Capacity		
13.3	Range-steps x % variation	As per Annexure C of specification	
13.4	Taps provided on HV winding (Yes/No)		
14.0	OLTC gear		
14.1	Make		
14.2	Type		
14.3	Reference std		
14.4	No of compartment		
14.5	Mounting arrangement	Side mounted	
14.6	Rated current Amp		
14.7	Rated step capacity, kVA		
14.8	Short circuit withstand for 2 secs, kA		
14.9	Time required for one step change sec.		
14.10	Rated voltage for motor, V AC		
14.11	Rating of motor		
14.12	Rated voltage for auxiliaries V		
14.13	Consumption of auxiliaries		
14.14	OLTC features as per specification, Yes/No		
14.15	Does the overload rating of OLTC match with that of the transformer under all conditions Yes/No		
15.0	Transformer Monitoring relay – REGDA		
15.1	Make		
15.2	Reference standard		
15.3	Overall dimensions, mm		
16.0	Cooling system		
16.1	Type of cooling	As per Annexure C of specification	
16.2	No. of cooling unit groups		
16.3	Capacity of cooling units		
16.4	Mounting of radiators		
16.5	Number of radiators and Size		
16.6	Type & size of radiator header main valve		
16.7	Type & size of individual radiator valve		
16.8	Total radiating surface, sq mm		
16.9	Thickness of radiator tubes, mm	Minimum 1.2 mm	
16.10	Schematic flow diagram of the cooling system furnished (Yes/No)		
16.11	Type and make of Fan motor		
16.12	No. of fan motor per bank (Working + Standby)		
16.13	Rated Power Input (kW)		
16.14	Rated Voltage, Speed of Motor		
16.15	Efficiency of motor at Full load(%)		
16.16	Locked Rotor current(Amps)		
17.0	Details of tank		

17.1	Material	Robust mild steel plate without pitting and low carbon content	
17.2	Thickness of sides mm		
17.3	Thickness of bottom mm		
17.4	Thickness of cover mm		
17.5	Confirmation of tank designed and tested for vacuum pressure (Ref: CBIP manual) (Yes/No)		
17.5.1	Vacuum mm of Hg. / (kN/m^2)	As per CBIP	
17.5.2	Pressure mm of Hg	Twice the normal head of oil / normal pressure + 35 kN/m^2 whichever is lower , As per CBIP	
17.6	Is the tank lid slopped?	Yes	
17.7	Inspection cover provided (Yes/No)	As per clause No 3.2.1.5	
17.8	Location of inspection cover (Yes/No)	As per clause No 3.2.1.5	
17.9	Min. dimensions of inspection cover (provide list of all inspection cover with dimension), mm x mm		
18.0	Core		
18.1	Type:	Core	
18.2	Core material grade	Premium grade minimum M4 or better	
18.3	Thickness of lamination mm	Max. 0.27 mm with insulating coating on both sides	
18.4	Insulation between core lamination		
18.5	Design flux density of the core at rated condition at principal tap, Tesla		
18.6	Maximum flux density allowed in the core at extreme over excitation / over fluxing , Tesla		
18.7	Equivalent cross section area of core, mm^2		
18.8	Guaranteed No load current at 90% / 100% / 110% rated voltage & frequency (Amp)		
18.8.1	HV		
18.8.2	LV		
19.0	Type of winding		
19.1	HV		
19.2	LV		
19.3	Conductor material	Electrolytic copper as per relevant standard	
19.4	Maximum current density allowed, Amp per mm^2	3.0 A/ mm^2	
19.5	Gauge/area of cross section of conductor, mm^2		
19.5.1	HV		
19.5.2	LV		

19.6	Maximum current density achieved in winding (LV/HV/HVT) – Amps/ mm^2		
19.7	Insulating material		
19.7.1	HV turn		
19.7.2	LV turn		
19.7.3	LV- core		
19.7.4	HV-LV		
19.8	Insulating material thickness, mm		
19.8.1	HV turn		
19.8.2	LV turn	-	
19.8.3	LV to core		
19.8.4	HV to LV		
20.0	Minimum design clearance , mm		
20.1	HV to earth in air		
20.2	HV to earth in oil		
20.3	LV to earth in air		
20.4	LV to earth in oil	-	
20.5	Between HV & LV in Air		
20.6	Between HV & LV in oil		
20.7	Top winding and yoke	-	
20.8	Bottom winding and yoke		
21.0	Insulating oil		
21.1	Quantity of oil Ltrs	-	
21.1.1	In the transformer tank		
21.1.2	In each radiator		
21.1.3	In OLTC chamber		
21.1.4	Total quantity		
21.2	10% excess oil furnished?	Yes	
21.3	Type of oil	New insulating oil as per IS: 335, and Cl. 4.2.7 of the specification	
21.4	Oil preservation system provided (Yes/No)	As per Annexure C of specification	
22.0	Bushing		
22.1	Make		
22.2	Type		
22.3	Reference standard		
22.4	Voltage class, kV		
22.4.1	HV side bushing		
22.4.2	LV side line and neutral bushing		
22.5	Creepage factor for all bushing mm / kV	As per Annexure C of specification	
22.6	Rated current , Amp		
22.6.1	HV bushing		
22.6.2	LV line and neutral bushing		
22.7	Rated thermal short current		
22.7.1	HV bushing	As per Annexure C of specification	
22.7.2	LV line and neutral bushing	As per Annexure C of	

		specification	
22.8	Weight Kg		
22.8.1	HV bushing		
22.8.2	LV line and neutral bushing		
22.9	Free space required for bushing removal, mm		
22.9.1	HV bushing		
22.9.2	LV line and neutral bushing		
23.0	Terminal connections		
23.1	HV	As per Annexure C of specification	
23.2	LV	As per Annexure C of specification	
23.3	LV Neutral	As per Annexure C of specification	
24.0	H.V. Cable box/Terminals		
24.1	Suitable for cable/conductor type size	As per Annexure C of specification	
24.2	Termination height , mm	1000 mm , minimum	
24.3	Gland plate dimension mm x mm		
24.4	Gland plate material	Aluminum	
24.5	Gland plate thickness , mm	5 mm minimum	
24.5	Phase to clearance inside box / terminals , mm		
24.6	Phase to earth inside box / terminals , mm		
25.0	L.V line side cable box		
25.1	Suitable for cable type , size	As per Annexure C of specification	
25.2	Termination height , mm	1000 mm , minimum	
25.3	Gland plate dimension mm x mm		
25.4	Gland plate material	Aluminum	
25.5	Gland plate thickness , mm	5 mm minimum	
25.6	Phase to clearance inside box / terminals , mm		
25.7	Phase to earth inside box , mm		
26.0	LV Neutral cable box		
26.1	Suitable for cable type , size	As per Annexure C of specification	
26.2	Termination height , mm		
26.3	Gland plate dimension mm x mm		
26.4	Gland plate material	Aluminum	
26.5	Gland plate thickness , mm	5 mm minimum	
26.6	Phase to clearance inside box , mm		
26.7	Phase to earth inside box , mm		
27.0	Marshalling box cubical provided as per clause no. of spec. (Yes / no)		
27.1	Mounting of marshalling box	Project specific to be filled up (Separate / tank mounted)	

28.0	Neutral Current Transformer (NCT)			
28.1	Type			
28.2	Make			
28.3	Reference standard			
28.4	CT Ratios			
28.5	Burden ,VA			
28.6	Class of Accuracy	PS	5P20	
28.7	KPV , volts , minimum			
28.8	Resistance, ohm @ 75 deg C, maximum			
28.9	Magnetizing current @ Vk/4 , mA , maximum			
28.10	Short time withstand current	26.3 kA for 3 sec.		
29.0	Winding current transformer (WCT)			
29.1	Type			
29.2	Make			
29.3	Reference standard			
29.4	CT ratio			
29.5	Burden ,VA	Manufacturer Std.		
29.6	Class of accuracy	Manufacturer Std.		
30.0	Pressure release device			
30.1	Minimum pressure the device is set to rupture			
30.1.1	For main tank			
30.1.2	For OLTC			
31.0	Alarm and trip contact ratings of protective devices			
31.1	Rated/making/ breaking currents , Amp @ voltage for			
31.1.1	PRV for main tank			
31.1.2	PRV for OLTC			
31.1.3	Buchholz relay			
31.1.4	Oil surge relay for OLTC			
31.1.5	Sudden pressure relay			
31.1.6	OTI			
31.1.7	WTI			
31.1.8	Magnetic oil gauge			
32.0	Fittings accessories each transformer furnished as per clause No. (Bidder shall attach separate sheet giving details, make and bill of materials)			
33.0	Painting: as per clause for the transformer , cable boxes, radiator, marshalling box, RTCC etc (Yes/No)			
34.0	Over all transformer dimensions			
34.1	Length , mm	6.5 meters maximum allowed		
34.2	Breadth , mm	5.0 meters maximum allowed		
34.3	Height , mm	5.0 meters maximum		

		allowed	
35.0	Transformer tank dimensions		
35.1	Length , mm		
35.2	Breadth , mm		
35.3	Height , mm		
36.0	Marshalling box dimensions		
36.1	Length , mm		
36.2	Breadth , mm		
36.3	Height , mm		
37.0	Weight data		
37.1	Core, kG		
37.2	Frame parts, kG		
37.3	Core and frame, kG		
37.4	Total winding, kG		
37.5	Core and frame winding, kG		
37.6	Tank, kG		
37.7	Tank lid, kG		
37.8	Empty conservator tank , kG		
37.9	Each radiator empty , kG		
37.10	Total weight of all radiator empty , kG		
37.11	Weight of oil in tank , kG		
37.12	Weight of oil in each conservator , kG		
37.13	Weight of oil in each radiators , kG		
37.14	Total weight of oil in radiator , kG		
37.15	OLTC gear including oil , kG		
37.16	Total transport weight of the transformer , kG		
37.17	Total transport weight of the transformer with OLTC and all accessories		
38.0	Volume data		
38.1	Volume of oil in main tank , liters		
38.2	Volume of oil between highest and lowest levels of main conservator ,liters		
38.3	Volume of oil between highest and lowest levels of OLTC conservator, liters		
38.4	Volume of oil in each radiator , liters		
38.5	Total volume of oil in radiators , liters		
38.6	Volume of oil in OLTC , liters		
38.7	Transformer total oil volume , liters		
39.0	Shipping data		
39.1	Weight of heaviest package, kG		
39.2	Dimensions of the largest package (L x B x H) mm		
40.0	Tests		
40.1	All in process tests confirmed as per Cl. (Yes /No)		
40.2	All types tests confirmed as per Cl. (Yes /No)		
40.3	All in routine tests confirmed as per Cl.		

	(Yes /No)		
40.4	All in special tests confirmed as per Cl. (Yes /No)		

Bidders Name : _____

Signature : _____

Name : _____

Designation : _____

Seal of Company

Date : _____

SCHEDULE – C17

66 KV OUT DOOR LIGHTNING ARRESTER

Sr. No.	Description	Data By Purchaser	Data by Supplier
1	Name of manufacturer		
2	Type	Gapless, ZnO type, single pole, heavy duty, station class, pedestal mounted	
3	Model		
4	No. of units.		
5	Installation	Outdoor	
6	Application	Protection of Transformers, circuit breakers, lines and other outdoor S/S equipment.	
7	LA connection to system	Phase to earth	
8	Type of Conductor	ACSR Zebra / Goat	
9	Construction	Single Phase	
10	Rated voltage of arrester (KVrms)	60 KV	
11	Nominal discharge current (Amps) (8x20 micro sec. wave) peak value	10KA	
12	System Particulars		
i)	Highest System Voltage	72.5 KV	
ii)	Frequency	50HZ ± 5%	
iii)	System neutral	Solidly earthed	
iv)	Max. value of temporary over voltage & its max. duration		
	- Insulation level of equipment to be protected	325 KVp	
	- System short circuit level	31.5KA for 3 seconds.	
13	Maximum continuous operating voltage (MCOV)	52KV	
14	Impulse withstand current	100KAp	
15	Long Duration discharge class	3	
16	Minimum single impulse energy capability		
17	Maximum residual voltage at switching impulse current of 1KAp (30/60 micro sec. wave)	136 KVp	

Schedules & Annexure **Schedule C17**

Sr. No.	Description	Data By Purchaser	Data by Supplier
18	Max. residual voltage (1x20 micro sec. wave)		
i)	At 05 KAp		
ii)	At 10 KAp		
iii)	At 20 KAp		
19	Minimum creepage distance	31 mm/KV	
20	Pressure relief class	40KA	
21	Reference current (mA)		
22	Leakage current at COV (mA)		
	Resistive		
	Capacitive		
23	Dry and wet power frequency withstand voltage of arrester insulation (KVrms)		
24	Virtual steepness for front of wave for above (KV/micro sec.)		
25	Ratio of system voltage withstand level to protection level of surge arrester		
26	High current impulse withstand 4/10 micro second peak value (KV)		
27	Long duration current Impulse		
i)	Current peak.		
ii)	Virtual duration.		
28	Temporary Over Voltage Capacity (KVp)		
i)	At 0.1 Sec.		
ii)	At 1.0 Sec.		
iii)	At 10.0 Sec.		
iv)	At 100.0 Sec.		
29	Weight of complete unit (Kg)		
30	Height of complete unit from base to the line side (mm)		
31	Minimum recommended spacing between arresters Centro to Centro (mm)		
32	Clearance required from ground equipment at various heights of arresters unit (mm)		

Schedules & Annexure **Schedule C17**

Sr. No.	Description	Data By Purchaser	Data by Supplier
33	Earthing arrangement provided for earthing side of arresters.		
34	Mounting flanges dimensional details.		
35	Type and range of milli-ampere meter.		
36	Type and specifications of the surge connecters.		
37	Surge counter min. current for recording a lightning stroke	200 Amp	
38	Surge counter max. disch. Current withstand	100KA peak for 4/10 wave shape.	
39	Range of continuous leakage current at rated voltage with variation due to change in temperature & frequency		
40	Size and length of flexible Cu cable for connection between LA & surge counter		
41	Voltage time curve for thermal stability of LA after a stroke	To be provided	
42	Paint shade of surge counter housing	Polyurethane, 692 of IS-5	

Bidders Name : _____

Signature : _____

Name : _____

Designation : _____

Seal of Company Date : _____

SCHEDULE – D
LIST OF INSTALLATIONS

S.No.	Purchaser	Project	PF Ref.	Brief Description	Value	Target Commissioning	Commissioned	Performance	Person to whom reference may be made	Remarks
1	2	3	4	5	6	7	8	9	10	11

Bidders Name : _____

Signature : _____

Name : _____

Seal of Company

Designation : _____

Date : _____

SCHEDULE – E1

TECHNICAL DEVIATIONS FROM THE SPECIFICATION

(This shall form part of Technical Bid)

All the technical deviation from the tender specification shall be listed out by the Bidder, para by para in this schedule. Deviation taken in covering letter, standard terms and/or body of the Bid but not listed herein will make the Bid liable for rejection as 'Irresponsive'

S.No.	Section/Sub-Section	Part	Para	Deviation	Justification
1	2	3	4	5	6

Certified that above are the only technical deviations from the tender Specification

Name of Firm : _____

Signature of Bidder : _____

Designation : _____

Date : _____

Seal of Company

SCHEDULE – E2

COMMERCIAL DEVIATIONS FROM THE SPECIFICATION

(This shall form part of Technical Bid)

All the commercial deviation from the tender specification shall be listed out by the Bidder, para by para in this schedule. Deviation taken in covering letter, standard terms and/or body of the Bid but not listed herein will make the Bid liable for rejection as 'Irresponsive'.

S.No.	Section/Sub-Section	Part	Para	Deviation	Justification
1	2	3	4	5	6

Certified that above are the only technical deviations from the tender Specification

Name of Firm : _____

Signature of Bidder : _____

Designation : _____

Date : _____

Seal of Company

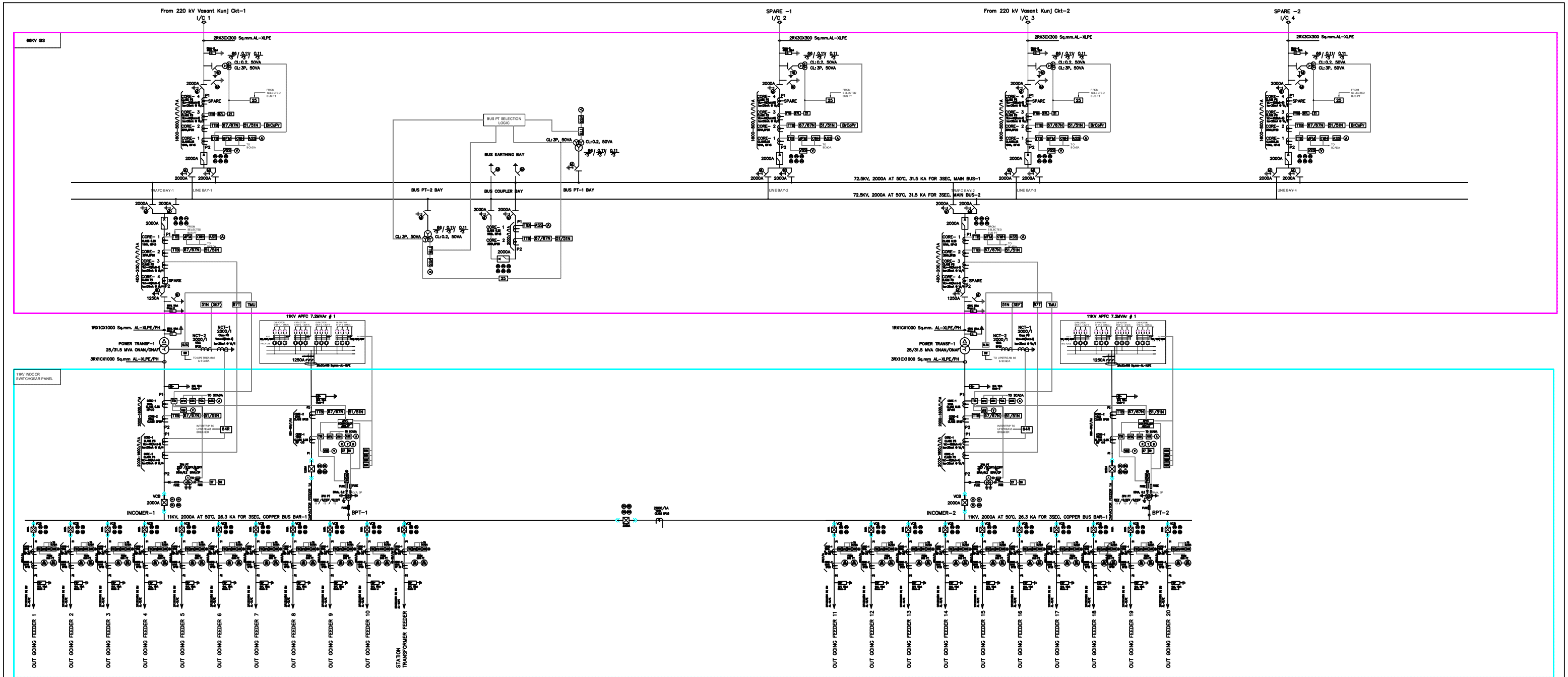

LEGEND

- POWER CIRCUIT
- CONTROL CIRCUIT
- BUSBAR
- LIGHTNING ARRESTOR
- 3 POSITION MOTORISED ISOLATOR WITH EARTH
- POTENTIAL TRANSFORMER
- MOTORISED EARTH SWITCH
- CURRENT TRANSFORMER
- SF6 CIRCUIT BREAKER
- POWER TRANSFORMER
- FUSE
- DRAWOUT TYPE VACCUM CIRCUIT BREAKER
- UNDER VOLTAGE PROTECTION
- OVER VOLTAGE PROTECTION
- MFM MULTI FUNCTION METER
- PQA POWER QUALITY ANALYSER
- KWH ENERGY METER
- KSS AMMETER SELECTOR SWITCH
- A AMMETER
- VSS VOLTAGE SELECTOR SWITCH
- V VOLTMETER
- TTB TEST TERMINAL BLOCK
- 87L LINE DIFFERENTIAL PROTECTION
- 21 DISTANCE PROTECTION
- 25 SYNC-CHECK RELAY
- 64R RESTRICTED EARTH FAULT
- OLTC TAP POSITION & RAISE/LOW ON OLTC
- DIFFERENT SWITCHES ON POWER TRANSFORMER - HV WTI, LV WTI, OTI, Main Tank OSR, SPR, PRV, Buchholz , MOG, OLTC OSR trip, OLTC Out of Step/Stuck Up/Motor trip
- NEUTRAL DISPLACEMENT PROTECTION
- 87/87N DIRECTIONAL OVERCURRENT & EARTH FAULT
- 87/51N OVERCURRENT & EARTH FAULT
- BrCoPr BROKEN CONDUCTOR PROTECTION
- SF6 ABNORMAL PRESSURE PRTECTION
- LOCAL BREAKER BACKUP PROTECTION
- LOCK OUT RELAY
- ANTI PUMPING RELAYN
- BREAKER CONTACT MULTIPLIER
- TRIP CIRCUIT SUPERVISION RELAY

Note:

1. This drawing is tentative and for tendor pupose only.
2. Refer tender specification for further details.

REV. No.	DESCRIPTION	DATE	PRPD. BY	CHKD. BY	APPR. BY
A	FIRST DRAWING	12.03.25	US	US	AS

BSES Rajdhani Power Limited

BSES BHAWAN
Nehru Place, New Delhi - 110019

DRAWN	SK	TITLE:- SLD OF 2X31.5MVA 66/11KV VAMASUNDARI GRID
CHECKED	US	
APPD.	AS	
DATE	12.03.25	DWG No.:- BRPL-DJBRJK-DEE-B-0001
SCALE	NTS	SHEET 1 OF 1

REV. 01 VER 01

GROUND FLOOR

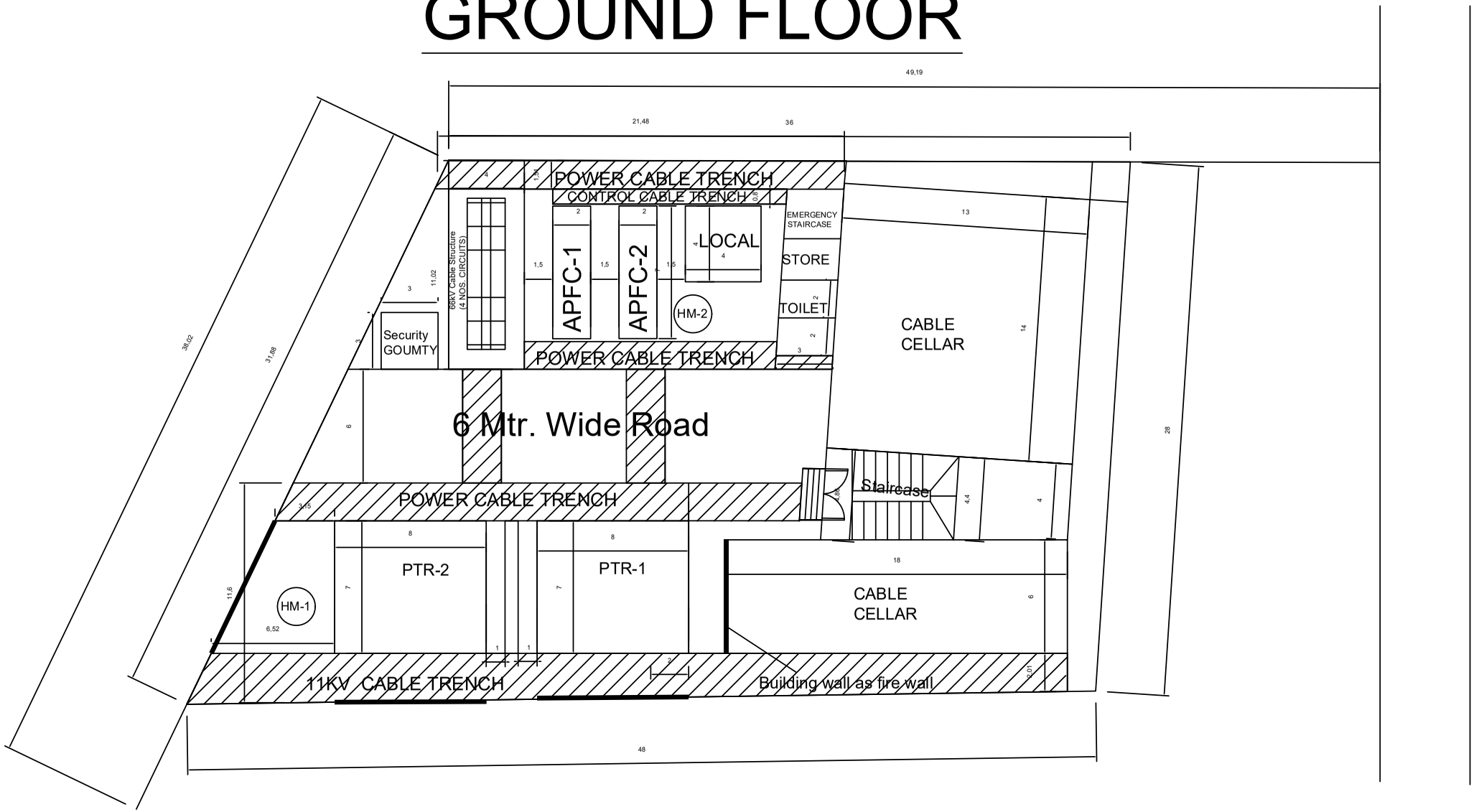

FIRST FLOOR



SECOND FLOOR

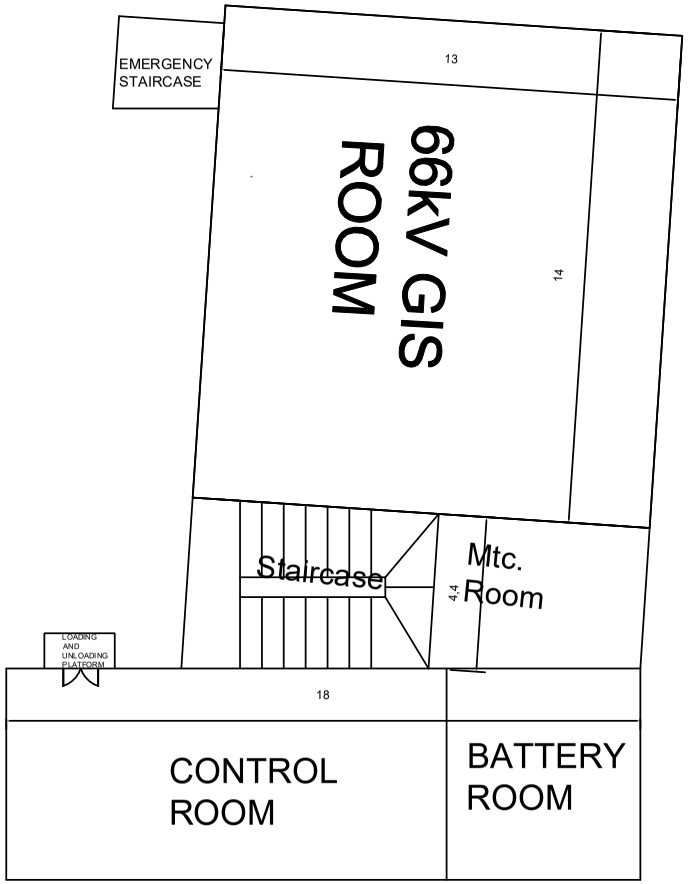

TECHNICAL SPECIFICATIONS OF PACKAGE-B

CONSOLIDATED TECHNICAL REQUIREMENT

FOR

SUPPLY, ERECTION, TESTING & COMMISSIONING

OF

66kV CABLE LAYING WORK (IN-FEED)

Date	Revision	Pages
21.11.2025	R0	12

Index

S. No	Title	Page no
1.00.00	**GLOSSARY LIST**	3
2.00.00	**GENERAL DESIGN CRITERIA**	4
3.00.00	**PACKAGE**	7
3.01.00	**Package – B** Scheme no-1: 02 Nos. 66KV Infeeds from 220KV Sarita Vihar Substation DTL to Molarbandh Substation BRPL by laying of 04 Nos 66KV,3CX300sq.mm. XLPE cables. Scheme no-2: Establishment of 66/11 kV GIS Substation at Vamasundari, rajokari with Infeed provision from 220kV Vasant Kunj (Double Circuit) - 4 No. 66 KV 3CX300 mm2.	
4.00.00	**TECHNICAL SPECIFICATION**	7
1.	Laying of 66kV / 33kV / 11kV / 1.1 kV grade PVC / XLPE cables	
2.	66kV 3 Core cable (66kV, 3CX300 sqmm cable), 33 kV 3Cx400 sq m	
3.	66kV Jointing Kit	
4.	66kV Termination Kit	
5	33kV and 66kV LA	
6	ACSR Conductors	
7	RFID Active and Passive Markers	
8	Chemical Earthing	
9	GI and Earthing pipe, GI strip	
10	C wedge Connectors	
11	PPE Items	
12	1.1kV Power and Control cable	
13	HDPE pipe	
14	Hardware RCC items & Steel items	
15	48 Fibre OFC cable	
5.00.00	**SCHEDULES**	8
Schedule-I	Deviation from Specification	
Schedule-II	Make of Major items	
6.00.00	**Infeed route map, SLD and Layout**	10
	Package –A	
	Package –C	
	Package –D	

1.00.00 GLOSSARY LIST

S. No.	Abbreviation	Description
1	F.O. R.	Freight On Road
2	CT	Current Transformer
3	PT	Potential Transformer
4	kV	Kilo Volts
5	MVAR	Mega Volt Amperes Reactive
6	MVA	Mega Volt Amperes
7	kVA	Kilo Volt Amperes
8	O&M	Operation and Maintenance
9	LOA	Letter of Award
10	FO	Fiber Optic
11	MCD	Municipal Corporation of Delhi
12	DDA	Delhi Development Authority
13	PWD	Public Works Department
14	U/G	Underground
15	HT	High Tension
16	ACSR	Aluminum Conductor Steel Reinforced
17	BOQ	Bill of Quantity
18	GA	General Arrangement
19	RCC	Reinforced Cement Concrete
20	CPRI	Central Power Research Institute
21	ERDA	Electrical Research and Development Association
22	CRP	Control &Relay Panel
23	T&P	Tools & Plant
24	IR	Insulation Resistance
25	OFC	Optical Fiber Cable
26	GAIL	Gas Authority of India Limited
27	IGL	Indraprastha Gas Limited
28	IOCL	Indian Oil Corporation Limited
29	DMRC	Delhi Metro Rail Corporation
30	PPE	Personal Protective Equipment
31	FRLS	Fire Retardant Low Smoke
32	GI	Galvanized Iron
33	GPR	Ground Penetration Radar
34	P/L	Providing and laying
35	P/F	Providing and fixing
36	TAC	Tariff Advisory Committee
37	IS	Indian Standard
38	IEC	International Electro technical Commission

2.00.00 GENERAL DESIGN CRITERIA

2.01.00 General Service condition

a) Maximum ambient temperature (Degree C): 50

b) Minimum ambient temperature (Degree C): 0

c) Relative Humidity (%): 100

d) Maximum annual rainfall (mm): 750

e) Maximum wind pressure (Kg/Sq.m): 150

f) Maximum Altitude above mean sea level (Meters): 1000

g) Seismic level Zone IV as per IS 1893

h) Pollution Level: Heavy/Dry

2.02.00 Code and Standards

Contractor shall follow latest Indian Standards or International Standards. Refer respective equipments specification for applicable standards.

2.03.00 Scope and Services

S.No.	Head	BRPL Scope	Contractor's Scope	Remarks
1	Road Cutting Permission	X	√	Statutory fees will be borne by BRPL
2	Supply, Laying, testing and commissioning of 66kV cable , Cable Jointing , Cable termination including laying , testing and commissioning of OFC joint and OFC termination.	X	√	NA
3	Supply, Laying, testing and commissioning of 33kV Bay consisting 33kV Circuit breaker, 33kV Isolator, 33kV CT & PT, 33kV LA, Bay marshalling kiosk etc.	X	√	NA
4	Permissions from relevant External and Internal Agencies regarding Cable Laying and Commissioning (Traffic Police, GAIL, IGL, IOCL, PWD, CPWD, Pollution Control Board, DMRC, Electrical inspector etc.)	X	√	Statutory fees will be borne by BRPL
5	Supply, Erection, Testing and commissioning of Equipments related to schemes like CT, CVT, CB, Isolator, LA etc. if any.	X	√	As per specifications and Standards
6	Supply and Erection of structure for mounting equipments in the bay like structure for CT, CVT, CB, Isolator, LA etc.	X	√	
7	GPR/Scanning of the whole route (before execution of project and after completion of project) shall be done and the same shall be submitted to BRPL.	X	√	This work shall be done by vendor before execution of job.

CONSOLIDATED TECHNICAL EQUIREMENT FOR SUPPLY, ERECTION, TESTING & COMMISSIONING OF 66kV CABLE LAYING WORK (IN-FEED)

S.No.	Head	BRPL Scope	Contractor's Scope	Remarks
	The report shall be submitted within 15 days after the issue of LOI HDD route depth shall be decided after submission of report			
8	• Drawing Submissions-before execution of project • As built drawing submission- after completion of project	X	√	NA
9	Engineering Approvals	√	X	NA
10	Testing Equipments	X	√	NA
11	Lighting Arrangement	X	√	NA
12	Construction Power and Construction Water	X	√	NA
13	Safety , Security and insurance of Manpower(Labour, Engineers, Supervisors etc)	X	√	Labour should be provided with every safety gear like safety jacket, helmet etc.
14	Various Tools and Tackles related to Job	X	√	NA
15	Transportation of Material and any other tender related work	X	√	NA
16	Cleanliness around project site	X	√	NA
17	Security and Safety of material until handing over the project to BRPL	X	√	NA
18	Providing of Various Machines e.g Crane, Hydra, JCB, Hammer , Cutting Machine etc to complete the project	X	√	NA
19	Providing of Trenchless Machine	X	√	NA
20	Loading and Unloading of material at site including scrap returning to BRPL site	X	√	NA
21	Electrical Inspector Clearance	X	√	Statutory fees will be borne by BRPL
22	Providing of Continuous Steel Barricading with Mobile no of project supervisor, sufficient traffic marshal, becon light, Fluorescent tape, PPE etc. (Mobile no shall be clearly visible on the barricading)	X	√	as per drawing enclosed with specification.
23	Permit to work requesting Agency in BRPL premises	X	√	Permit Should be applied to Engineer In-charge prior to work through proper procedure
24	Permit to work issuing agency inside BRPL Premises	√	X	NA
25	Temporary office and Material Store near work premises	X	√	NA

S.No.	Head	BRPL Scope	Contractor's Scope	Remarks
26	Storage of all kind of Material required for project	X	√	BRPL premises will not provide for any kind of material storage and issuance
27	Dismantling of material at project site, , Dismantled material loading, Unloading and transportation and deposit to BRPL store	X	√	Store location will be within BRPL premises
28	Preparation, updation and submission of PERT chart fortnightly to track activities	X	√	NA
29	Submission of final drawing showing layout of cable in Google map along with of cable joint location with GPS Coordinates	X	√	Approval will be done by BRPL Representative
30	Removal and renaming of existing signboard of other utilities (if any) including painting as per their actual route	X	√	Painting colour and material should be in line with the existing ones for aesthetic look
31	Surface levelling, removal and disposal of excess earth (malwa) after back filling of trench. During execution excavated earth shall be covered with green mat to prevent dust pollution. Also regular Water Sprinkling is to be required at site.	X	√	NA
32	Supply, installation, testing and commissioning of Active and Passive ball markers	X	√	NA
33	Supply & installing of RCC cable route marker, RCC cable joint marker and RCC Coffin for joint. , RCC slab, warning tape etc.	X	√	Shall be designed as per tender document
34	Cable Route Tracer and Marker-supply, testing and commissioning (as applicable)	X	√	NA
35	Sheath Integrity test before Charging of 66kV Cable	X	√	Mandatory
36	All cable drum shall be returnable basis so immediate after laying of cable, empty cable drum shall be removed away from site at their risk and cost by respective bidder from time to time in line with project progress.	X	√	

S.No.	Head	BRPL Scope	Contractor's Scope	Remarks
37	Compliance of instructions/ orders issued by National Green Tribunal/ Central Pollution Control Board/ any other agency related to pollution.	X	√	Any kind of penalty shall be borne by the vendor
38	De-watering of pits	X	√	Scope shall be covered as per execution team requirement.
39	Civil works	X	√	Any kind of civil works related to the project
40	As built drawing	X	√	Page size- A1, 4 sets (CES, TRL, P&C, with final bill)
41	Handling of non- standard drum length	X	√	
42	Route survey, preparation of site plan and profile	X	√	
43	Cross bonding design	X	√	Based on offered cable design
44	ETC including supply of materials, design, consultancy etc of bridge/truss/structure for nallah crossing	X	√	
45	SCADA	X	√	Whole work

Special requirement

1. All jointing Kit shall have “Mechanical Connector” and not “Crimping”.
2. All the joints shall be covered with RCC coffin. Coffin shall be filled with sand. Each coffin or nos. of coffin shall fully cover the joint. Drawing provided only for constructional purpose not showing complete length of coffin. Bidder has to consider coffin length or numbers such that the complete joint shall be covered.
3. Delivery of cable at site and all other associate equipments/accessories have to be aligned as per site requirement and progress.
4. All kind of structural steel shall be GI unless otherwise specified.
5. Make of all kind of materials shall be as per BRPL approved make list, no deviation shall be allowed from make list.

6. The 66kV, 3CX300 , cable is required with OFC embedded inside (OFC cable is of 48 fibre with 36 single mode and 12 multi mode). For OFC cable details please refer attached specification.
7. Depth of HDD shall be decided jointly after submission of GPR report
8. GIS kit shall be suitable for OFC embedded cable
9. Link cable for cross bonding shall be copper, 3.3KV, Size as Mentioned in BoQ

3.00.00 PACKAGE

3.01.00

Package –A

Scheme no-1: 02 Nos. 66KV Infeeds from 220KV Sarita Vihar Substation DTL to Molarbandh Substation BRPL by laying of 04 Nos 66KV,3CX300sq.mm. XLPE cables.

Scheme no-2: Establishment of 66/11 kV GIS Substation at Vamasundari, rajokari with Infeed provision from 220kV Vasant Kunj (Double Circuit) - 4 No. 66 KV 3CX300 mm2.

3.02.00 In-feed route map (attached below)

4.00.00 TECHNICAL SPECIFICATION

Please refer individual Technical Specification

5.00.00 SCHEDULES

SCHEDULE -1
TECHNICAL DEVIATION FROM THE SPECIFICATION
(This shall be part of Technical bid)

Technical deviation from specification if any, shall be listed out in below format

Sl no	Specification cl no	Deviation	Benefit to BRPL

SCHEDULE -II
BRPL APPROVED MAKE LIST OF MAJOR ITEMS

Sl no	Items Description	Approved Make

1	33kV outdoor Circuit Breaker	• ABB Ltd. • Siemens Ltd. • GE • CGPISL
2	33kV Isolator	• ABB LIMITED. • SIEMENS LIMITED. • CROMPTON GREAVES LIMITED.
3	33kV Lightning arrester	• ALSTOM • OBLUM ELECTRICAL INDUSTRIES PVT. LIMITED. • LAMCO INDUSTRIES PVT. LIMITED. • ABB LIMITED • CROMPTON GREAVES LIMITED. • ELECTROLYTE • RAYCHEM
4	33kV Control and Relay Panel	• ABB LIMITED. • SCHNEIDER ELECTRIC LIMITED. • SIEMENS LIMITED.
5	33kV outdoor CT and PT	• CROMPTON GREAVES LIMITED • KAPCO ELECTRIC PVT. LIMITED • MEHRU ELECTRICAL & MECHANICAL ENGINEERS P LIMITED • GE • BHEL • ABB Ltd.
6	33 kV/66kV Jointing and Termination KIT	• Raychem • 3M
7	HDPE Pipes	• Flow well • Tirupati • Narendra Polyplast • Flexi flow • Shivam Irrigation Works Pvt. Ltd. (Shivano) • Safal Polymer pvt ltd • Jindal Sanitations pvt ltd • Rajshree Technoplast pvt ltd.
8	Chemical Earthing	• JMV • Pragati • True Power • Genius Protection • Axis Electrical component
9	33Kv/66kV Jointing and Termination KIT	• Raychem • 3M
10	LDR (Line differential relay) Laying of cable 33 kV 2RX3CX400 SQMM from 220 kV Lodhi Road to NDSE Substation (Route Length- 5500 mtr))	Make- Schneider Model- For NDSE with 50 V DC P54321RULM0K68M

		For Lodhi Road 220 V DC P54331RULM0K68M
11	LDR (Line differential relay) Laying of 02 Nos 33kV 3CX400 sq.mm. XLPE cable from 220 kV RK Puram to R.K.Puram-1 Grid substation.	Make: Schnider / Equivalent in Alstom Model: RKP-1 Grid side – P54321RUHM0K68M -1 No for 50V DC 220kV DTL RK Puram Grid side- b) P54331RUHM0K68M -1 No for 220V DC
12	LDR for other projects	Bidders to take make and model details from BRPL before submission of price bid.

BSES Rajdhani Power Ltd

Route Map, SLD and Layout

Package A

Scheme no-1: 02 Nos. 66KV Infeeds from 220KV Sarita Vihar Substation DTL to Molarbandh Substation BRPL by laying of 04 Nos 66KV,3CX300sq.mm. XLPE cables.

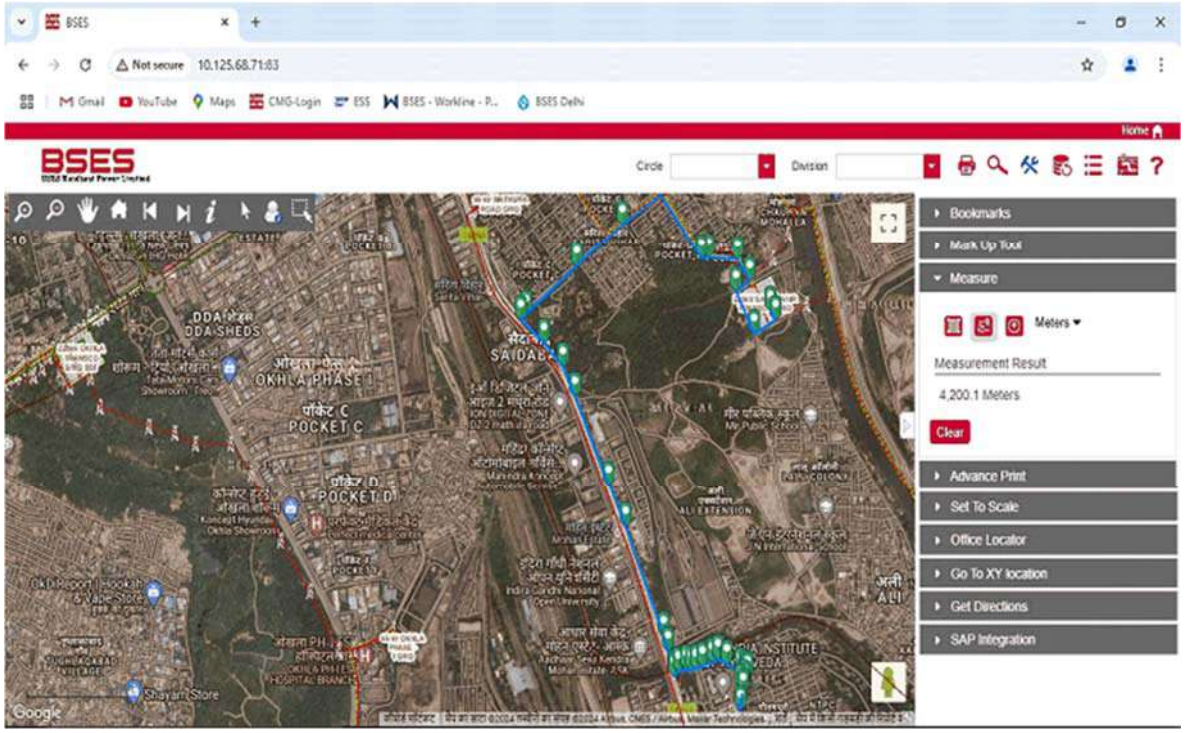

Scheme no-2: Establishment of 66/11 kV GIS Substation at Vamasundari, rajokari with Infeed provision from 220kV Vasant Kunj (Double Circuit) - 4 No. 66 KV 3CX300 mm2.

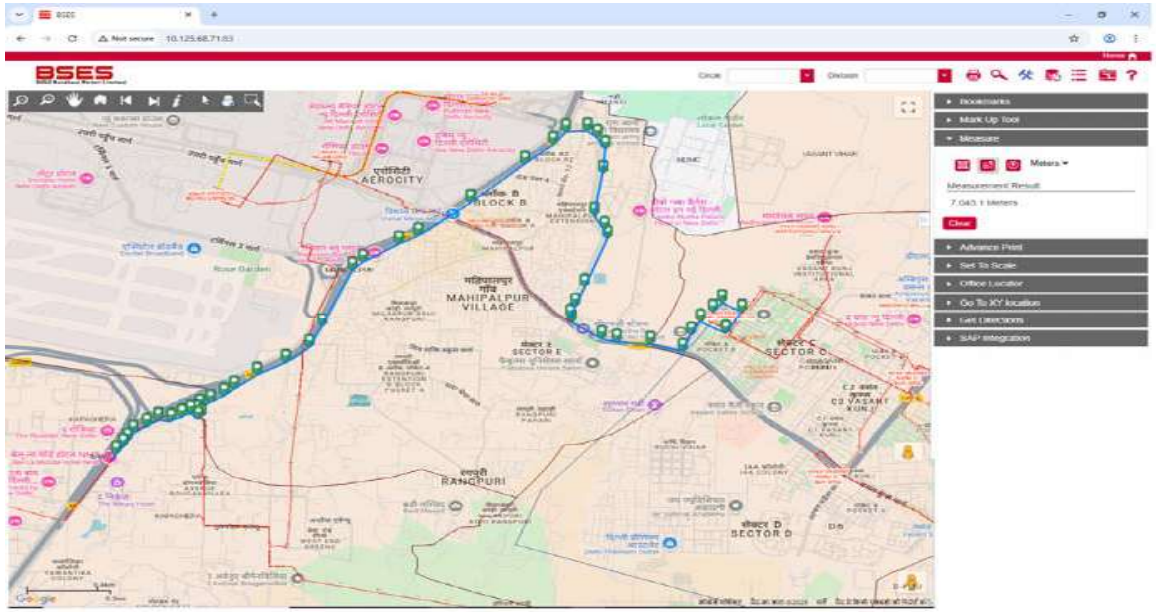

CONSOLIDATED TECHNICAL REQUIREMENT

FOR

SUPPLY, ERECTION, TESTING & COMMISSIONING

OF

66kV & 33 kV CABLE LAYING WORK (IN-FEED)

Date	Revision	Pages
10.11.2025	R0	21

Index

S. No	Title	Page no
1.00.00	**GLOSSARY LIST**	3
2.00.00	**GENERAL DESIGN CRITERIA**	4
3.00.00	**PACKAGE**	7
3.01.00	**Package – B** Scheme no-3: LILO of Vasant Kunj C Block to JNU circuit no 1 & 2 at 220 kV R K Puram by laying 12 nos 66 kV 1CX1000 SQMM XLPE Cables from 220 kV R K Puram to JNU. Scheme no-4: Estimate for Laying of 02 nos 66 kV 3Cx300MM2 XLPE Cables(S/C) for providing additional circuit from 220KV PPK-1 to Bindapur Grid (G-3) & clubbing the existing two circuits into one comprising 2X3X1CX630 sqmm XLPE cable. (Route Length-2000M) Scheme no-5: Estimate for Laying of 02 nos 66 kV 3Cx300MM2 XLPE Cables(S/C) for providing additional circuit from 220KV PPK-1 to G-2 Grid & clubbing the existing two circuits into one comprising 2X3X1CX630 sqmm XLPE cable. (Route Length-3000M) Scheme no- 6: Conversion of 66kV O/H S/C T/L from Pankha Road -Sagarpur Circuit (from pankha Road Grid to Sagarpur Grid) with Route Length - 3100M & And 66kV O/H T-off Circuit of PPk-1 to Rewari Line(Dabri Crossing to Pankha Road) by laying of 02 Nos. 66KV 3Cx300sq.mm. XLPE cable Route Length - 1400 M. Scheme no- 7A: Estimate for conversion of 33 kV D/C O/H Peeragarhi -Mukharjee ckt 1 & 2 Tower line by laying of 3Cx400 sq.mm. XLPE Cables (4 nos cable) from Tower no 1 in front of GGSH to Mukharjee Park Grid having Route length-2800 M. Scheme no- 7B: Estimate for conversion of 33 kV O/H Paschim Vihar -Mukharjee ckt 3 (T-OFF Chaukhandi) by laying of 3Cx400 sq.mm. XLPE Cables (2 nos cable) from Paschim vihar grid to keshopur metro station (Keshopur nalla) & Keshopur sabji mandi to Mukharjee park grid having route length 2000 M & 3000 M. Scheme no- 8: Conversion of 33kV O/H feeder into U/G by laying of double 33kV 3x400 sq.mm. XLPE U/G cable From Malviya Nagar to Shivalik grid.	

	Scheme no- 9 Conversion overhead to U/G of 33kV Pankha Road to Mayapuri Circuit 1 & 2 by laying of 03 nos 33 kv 3x400mm2 XLPE cable	
4.00.00	**TECHNICAL SPECIFICATION**	7
1.	Laying of 66kV / 33kV / 11kV / 1.1 kV grade PVC / XLPE cables	
2.	66kV 3 Core cable (66kV, 3CX300 sqmm cable), 33 kV 3Cx400 sq m	
3.	66kV & 33 kV Jointing Kit	
4.	66kV & 33 kVTermination Kit	
5	33kV and 66kV LA	
6	ACSR Conductors	
7	RFID Active and Passive Markers	
8	Chemical Earthing	
9	GI and Earthing pipe, GI strip	
10	C wedge Connectors	
11	PPE Items	
12	1.1kV Power and Control cable	
13	HDPE pipe	
14	Hardware RCC items & Steel items	
15	48 Fibre OFC cable	
5.00.00	**SCHEDULES**	8
Schedule-I	Deviation from Specification	
Schedule-II	Make of Major items	
6.00.00	**Infeed route map, SLD and Layout**	10
	Package –A	
	Package –C	
	Package –D	

1.00.00 GLOSSARY LIST

S. No.	Abbreviation	Description
1	F.O. R.	Freight On Road
2	CT	Current Transformer
3	PT	Potential Transformer
4	kV	Kilo Volts
5	MVAR	Mega Volt Amperes Reactive
6	MVA	Mega Volt Amperes
7	kVA	Kilo Volt Amperes
8	O&M	Operation and Maintenance
9	LOA	Letter of Award
10	FO	Fiber Optic
11	MCD	Municipal Corporation of Delhi

12	DDA	Delhi Development Authority
13	PWD	Public Works Department
14	U/G	Underground
15	HT	High Tension
16	ACSR	Aluminum Conductor Steel Reinforced
17	BOQ	Bill of Quantity
18	GA	General Arrangement
19	RCC	Reinforced Cement Concrete
20	CPRI	Central Power Research Institute
21	ERDA	Electrical Research and Development Association
22	CRP	Control &Relay Panel
23	T&P	Tools & Plant
24	IR	Insulation Resistance
25	OFC	Optical Fiber Cable
26	GAIL	Gas Authority of India Limited
27	IGL	Indraprastha Gas Limited
28	IOCL	Indian Oil Corporation Limited
29	DMRC	Delhi Metro Rail Corporation
30	PPE	Personal Protective Equipment
31	FRLS	Fire Retardant Low Smoke
32	GI	Galvanized Iron
33	GPR	Ground Penetration Radar
34	P/L	Providing and laying
35	P/F	Providing and fixing
36	TAC	Tariff Advisory Committee
37	IS	Indian Standard
38	IEC	International Electro technical Commission

2.00.00 GENERAL DESIGN CRITERIA

2.01.00 General Service condition

a) Maximum ambient temperature (Degree C): 50
b) Minimum ambient temperature (Degree C): 0
c) Relative Humidity (%): 100
d) Maximum annual rainfall (mm): 750
e) Maximum wind pressure (Kg/Sq.m): 150
f) Maximum Altitude above mean sea level (Meters): 1000
g) Seismic level Zone IV as per IS 1893
h) Pollution Level: Heavy/Dry

2.02.00 Code and Standards

Contractor shall follow latest Indian Standards or International Standards. Refer respective equipments specification for applicable standards.

2.03.00 Scope and Services

S.No.	Head	BRPL Scope	Contractor's Scope	Remarks
1	Road Cutting Permission	X	√	Statutory fees will be borne by BRPL
2	Supply, Laying, testing and commissioning of 66kV cable , Cable Jointing , Cable termination including laying , testing and commissioning of OFC joint and OFC termination.	X	√	NA
3	Supply, Laying, testing and commissioning of 33kV Bay consisting 33kV Circuit breaker, 33kV Isolator, 33kV CT & PT, 33kV LA, Bay marshalling kiosk etc.	X	√	NA
4	Permissions from relevant External and Internal Agencies regarding Cable Laying and Commissioning (Traffic Police, GAIL, IGL, IOCL, PWD, CPWD, Pollution Control Board, DMRC, Electrical inspector etc.)	X	√	Statutory fees will be borne by BRPL
5	Supply, Erection, Testing and commissioning of Equipments related to schemes like CT, CVT, CB, Isolator, LA etc. if any.	X	√	As per specifications and Standards
6	Supply and Erection of structure for mounting equipments in the bay like structure for CT, CVT, CB, Isolator, LA etc.	X	√	
7	GPR/Scanning of the whole route (before execution of project and after completion of project) shall be done and the same shall be submitted to BRPL. The report shall be submitted within 15 days after the issue of LOI HDD route depth shall be decided after submission of report	X	√	This work shall be done by vendor before execution of job.
8	• Drawing Submissions-before execution of project • As built drawing submission- after completion of project	X	√	NA
9	Engineering Approvals	√	X	NA
10	Testing Equipments	X	√	NA
11	Lighting Arrangement	X	√	NA
12	Construction Power and Construction	X	√	NA

S.No.	Head	BRPL Scope	Contractor's Scope	Remarks
	Water			
13	Safety , Security and insurance of Manpower(Labour, Engineers, Supervisors etc)	X	√	Labour should be provided with every safety gear like safety jacket, helmet etc.
14	Various Tools and Tackles related to Job	X	√	NA
15	Transportation of Material and any other tender related work	X	√	NA
16	Cleanliness around project site	X	√	NA
17	Security and Safety of material until handing over the project to BRPL	X	√	NA
18	Providing of Various Machines e.g Crane, Hydra, JCB, Hammer , Cutting Machine etc to complete the project	X	√	NA
19	Providing of Trenchless Machine	X	√	NA
20	Loading and Unloading of material at site including scrap returning to BRPL site	X	√	NA
21	Electrical Inspector Clearance	X	√	Statutory fees will be borne by BRPL
22	Providing of Continuous Steel Barricading with Mobile no of project supervisor, sufficient traffic marshal, becon light, Fluorescent tape, PPE etc. (Mobile no shall be clearly visible on the barricading)	X	√	as per drawing enclosed with specification.
23	Permit to work requesting Agency in BRPL premises	X	√	Permit Should be applied to Engineer In-charge prior to work through proper procedure
24	Permit to work issuing agency inside BRPL Premises	√	X	NA
25	Temporary office and Material Store near work premises	X	√	NA
26	Storage of all kind of Material required for project	X	√	BRPL premises will not provide for any kind of material storage and issuance
27	Dismantling of material at project site, , Dismantled material loading, Unloading and transportation and deposit to BRPL store	X	√	Store location will be within BRPL premises
28	Preparation, updation and submission of PERT chart fortnightly to track activities	X	√	NA

S.No.	Head	BRPL Scope	Contractor's Scope	Remarks
29	Submission of final drawing showing layout of cable in Google map along with of cable joint location with GPS Coordinates	X	√	Approval will be done by BRPL Representative
30	Removal and renaming of existing signboard of other utilities (if any) including painting as per their actual route	X	√	Painting colour and material should be in line with the existing ones for aesthetic look
31	Surface levelling, removal and disposal of excess earth (malwa) after back filling of trench. During execution excavated earth shall be covered with green mat to prevent dust pollution. Also regular Water Sprinkling is to be required at site.	X	√	NA
32	Supply, installation, testing and commissioning of Active and Passive ball markers	X	√	NA
33	Supply & installing of RCC cable route marker, RCC cable joint marker and RCC Coffin for joint. , RCC slab, warning tape etc.	X	√	Shall be designed as per tender document
34	Cable Route Tracer and Marker-supply, testing and commissioning (as applicable)	X	√	NA
35	Sheath Integrity test before Charging of 66kV Cable	X	√	Mandatory
36	All cable drum shall be returnable basis so immediate after laying of cable, empty cable drum shall be removed away from site at their risk and cost by respective bidder from time to time in line with project progress.	X	√	
37	Compliance of instructions/ orders issued by National Green Tribunal/ Central Pollution Control Board/ any other agency related to pollution.	X	√	Any kind of penalty shall be borne by the vendor
38	De-watering of pits	X	√	Scope shall be covered as per execution team requirement.
39	Civil works	X	√	Any kind of civil works related to the project
40	As built drawing	X	√	Page size- A1, 4 sets (CES, TRL, P&C, with final

S.No.	Head	BRPL Scope	Contractor's Scope	Remarks
				bill)
41	Handling of non- standard drum length	X	√	
42	Route survey, preparation of site plan and profile	X	√	
43	Cross bonding design	X	√	Based on offered cable design
44	ETC including supply of materials, design, consultancy etc of bridge/truss/structure for nallah crossing	X	√	
45	SCADA	X	√	Whole work

Special requirement

1. All jointing Kit shall have “Mechanical Connector” and not “Crimping”.
2. All the joints shall be covered with RCC coffin. Coffin shall be filled with sand. Each coffin or nos. of coffin shall fully cover the joint. Drawing provided only for constructional purpose not showing complete length of coffin. Bidder has to consider coffin length or numbers such that the complete joint shall be covered.
3. Delivery of cable at site and all other associate equipments/accessories have to be aligned as per site requirement and progress.
4. All kind of structural steel shall be GI unless otherwise specified.
5. Make of all kind of materials shall be as per BRPL approved make list, no deviation shall be allowed from make list.
6. The 66kV, 3CX300 , 33 kV 3C x400 sqmm cable is required with OFC embedded inside (OFC cable is of 48 fibre with 36 single mode and 12 multi mode). For OFC cable details please refer attached specification.
7. Depth of HDD shall be decided jointly after submission of GPR report
8. GIS kit shall be suitable for OFC embedded cable
9. Link cable for cross bonding shall be copper, 3.3KV, Size as Mentioned in BoQ

3.00.00 PACKAGE

3.01.00

Package –A

Scheme no-1: Estimate for Laying of 02 nos 66 kV 3Cx300MM2 XLPE Cables(S/C) for providing additional circuit from 220KV PPK-1 to Bindapur Grid & clubbing the existing two circuits into one comprising 2X3X1CX630 sqmm XLPE cable. (Route Length-2000M)

Scheme no-2: Estimate for Laying of 02 nos 66 kV 3Cx300MM2 XLPE Cables(S/C) for providing additional circuit from 220KV PPK-1 to G-2 Grid & clubbing the existing two circuits into one comprising 2X3X1CX630 sqmm XLPE cable. (Route Length-3000M)

Scheme no-3: LILO of Vasant Kunj C Block to JNU circuit no 1 & 2 at 220 kV R K Puram by laying 12 nos 66 kV 1CX1000 SQMM XLPE Cables from 220 kV R K Puram to JNU.

Scheme no- 4: Conversion of 33kV O/H feeder into U/G by laying of double 33kV 3x400 sq.mm. XLPE U/G cable From Malviya Nagar to Shivalik grid.

Scheme no- 5: Conversion overhead to U/G of 33kV Pankha Road to Mayapuri Circuit 1 & 2 by laying of 03 nos 33 kv 3x400mm2 XLPE cable

Scheme no- 6: Conversion of 66kV O/H S/C T/L from Pankha Road -Sagarpur Circuit (from pankha Road Grid to Sagarpur Grid) with Route Length - 3100M & And 66kV O/H T-off Circuit of PPk-1 to Rewari Line(Dabri Crossing to Pankha Road) by laying of 02 Nos. 66KV 3Cx300sq.mm. XLPE cable Route Length - 1400 M.

Scheme no- 7: Estimate for conversion of 33 kV O/H Paschim Vihar -Mukharjee ckt 3 (T-OFF Chaukhandi) by laying of 3Cx400 sq.mm. XLPE Cables (2 nos cable) from Paschim vihar grid to keshopur metro station (Keshopur nalla) & Keshopur sabji mandi to Mukharjee park grid having route length 2000 M & 3000 M.

Scheme no- 8: Estimate for conversion of 33 kV D/C O/H Peeragarhi -Mukharjee ckt 1 & 2 Tower line by laying of 3Cx400 sq.mm. XLPE Cables (4 nos cable) from Tower no 1 in front of GGSH to Mukharjee Park Grid having Route length-2800 M.

3.02.00 In-feed route map (attached below)

4.00.00 TECHNICAL SPECIFICATION

Please refer individual Technical Specification

5.00.00 SCHEDULES

SCHEDULE -1
TECHNICAL DEVIATION FROM THE SPECIFICATION
(This shall be part of Technical bid)

Technical deviation from specification if any, shall be listed out in below format

Sl no	Specification cl no	Deviation	Benefit to BRPL

SCHEDULE -II
BRPL APPROVED MAKE LIST OF MAJOR ITEMS

Sl no	Items Description	Approved Make
1	33kV outdoor Circuit Breaker	• ABB Ltd. • Siemens Ltd. • GE • CGPISL
2	33kV Isolator	• ABB LIMITED. • SIEMENS LIMITED. • CROMPTON GREAVES LIMITED.
3	33kV Lightning arrester	• ALSTOM • OBLUM ELECTRICAL INDUSTRIES PVT. LIMITED. • LAMCO INDUSTRIES PVT. LIMITED. • ABB LIMITED • CROMPTON GREAVES LIMITED. • ELECTROLYTE • RAYCHEM
4	33kV Control and Relay Panel	• ABB LIMITED. • SCHNEIDER ELECTRIC LIMITED. • SIEMENS LIMITED.
5	33kV outdoor CT and PT	• CROMPTON GREAVES LIMITED • KAPCO ELECTRIC PVT. LIMITED • MEHRU ELECTRICAL & MECHANICAL ENGINEERS P LIMITED • GE • BHEL • ABB Ltd.
6	33 kV/66kV Jointing and Termination KIT	• Raychem • 3M
7	HDPE Pipes	• Flow well • Tirupati • Narendra Polyplast • Flexi flow • Shivam Irrigation Works Pvt. Ltd. (Shivano) • Safal Polymer pvt ltd • Jindal Sanitations pvt ltd • Rajshree Technoplast pvt ltd.

8	Chemical Earthing	• JMV • Pragati • True Power • Genius Protection • Axis Electrical component
9	33Kv/66kV Jointing and Termination KIT	• Raychem • 3M
10	LDR (Line differential relay) Laying of cable 33 kV 2RX3CX400 SQMM from 220 kV Lodhi Road to NDSE Substation (Route Length- 5500 mtr))	Make- Schneider Model- For NDSE with 50 V DC P54321RULM0K68M For Lodhi Road 220 V DC P54331RULM0K68M
11	LDR (Line differential relay) Laying of 02 Nos 33kV 3CX400 sq.mm. XLPE cable from 220 kV RK Puram to R.K.Puram-1 Grid substation.	Make: Schnider / Equivalent in Alstom Model: RKP-1 Grid side – P54321RUHM0K68M -1 No for 50V DC 220kV DTL RK Puram Grid side- b) P54331RUHM0K68M -1 No for 220V DC
12	LDR for other projects	Bidders to take make and model details from BRPL before submission of price bid.

BSES Rajdhani Power Ltd

Route Map, SLD and Layout

Package B

Scheme no-4: Estimate for Laying of 02 nos 66 kV 3Cx300MM2 XLPE Cables(S/C) for providing additional circuit from 220KV PPK-1 to Bindapur Grid (G-3) & clubbing the existing two circuits into one comprising 2X3X1CX630 sqmm XLPE cable. (Route Length-2000M)



Scheme no-5: Estimate for Laying of 02 nos 66 kV 3Cx300MM2 XLPE Cables(S/C) for providing additional circuit from 220KV PPK-1 to G-2 Grid & clubbing the existing two circuits into one comprising 2X3X1CX630 sqmm XLPE cable. (Route Length-3000M)



Scheme no-3: LILO of Vasant Kunj C Block to JNU circuit no 1 & 2 at 220 kV R K Puram by laying 12 nos 66 kV 1CX1000 SQMM XLPE Cables from 220 kV R K Puram to JNU.

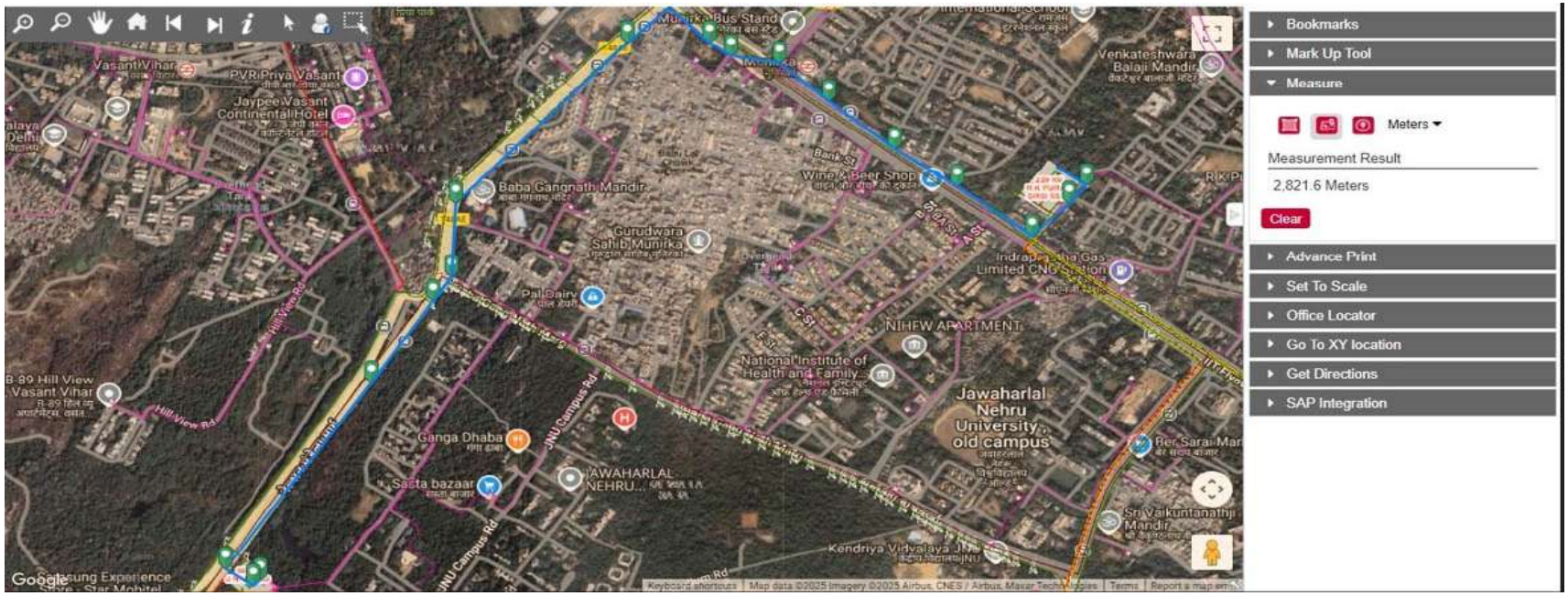

Scheme no- 8: Conversion of 33kV O/H feeder into U/G by laying of double 33kV 3x400 sq.mm. XLPE U/G cable From Malviya Nagar to Shivalik grid.

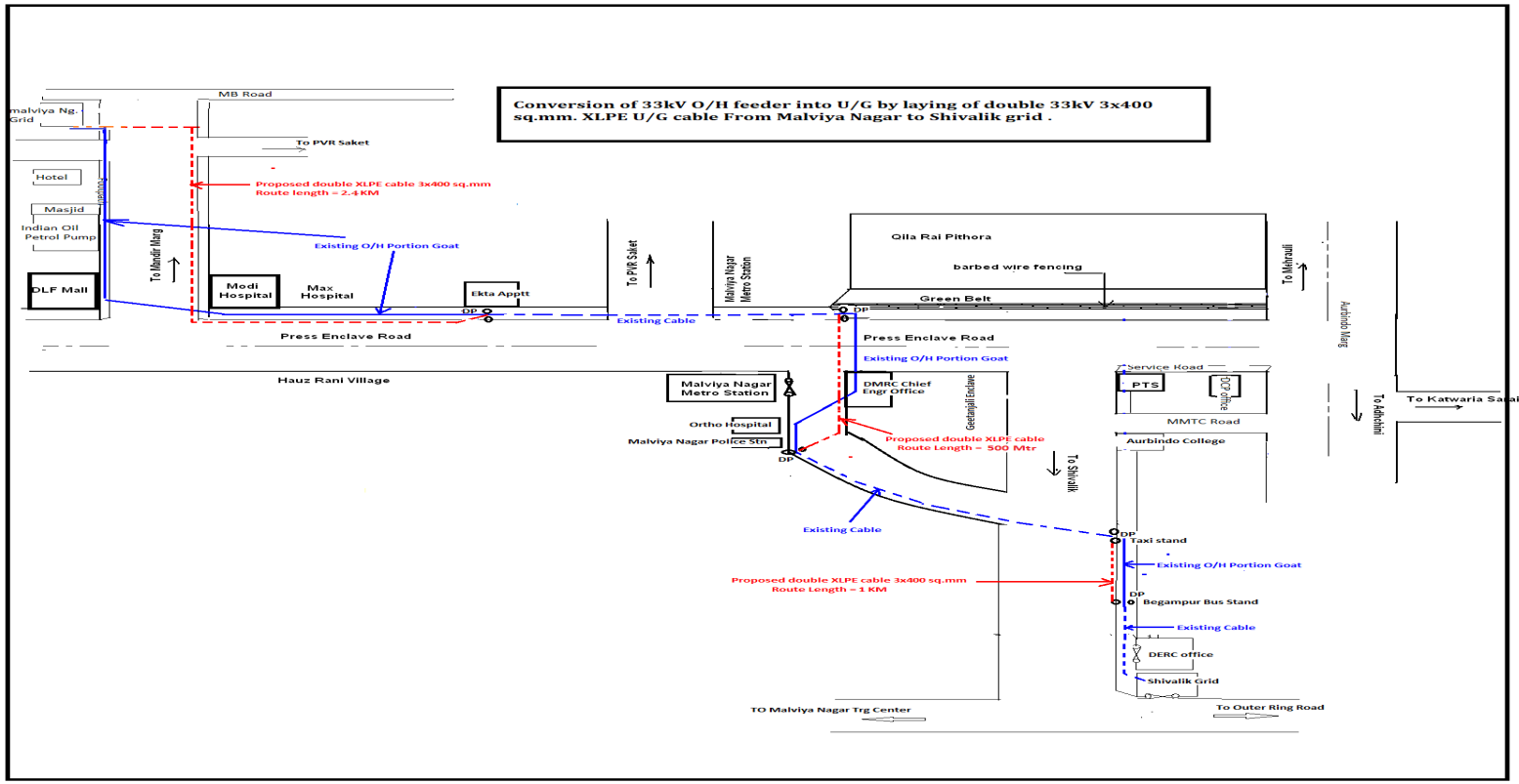

Scheme no- 9: Conversion overhead to U/G of 33kV Pankha Road to Mayapuri Circuit 1 & 2 by laying of 03 nos 33 kv 3x400mm2 XLPE cable

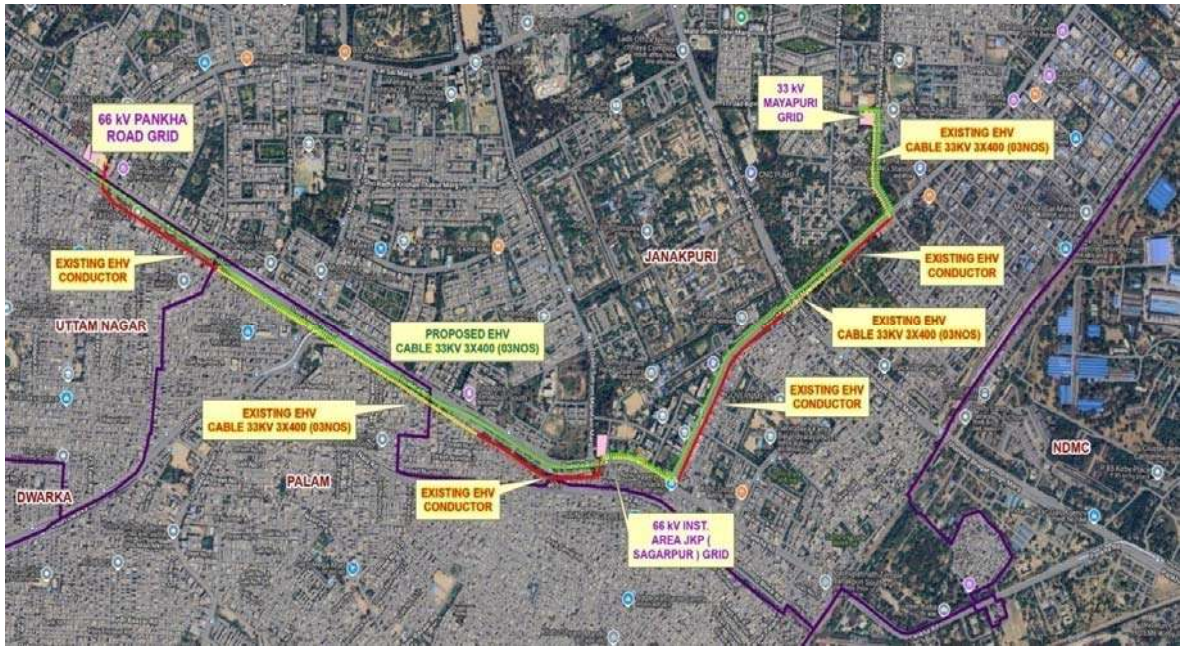

Scheme no- 6: Conversion of 66kV O/H S/C T/L from Pankha Road -Sagarpur Circuit (from pankha Road Grid to Sagarpur Grid) with Route Length - 3100M & And 66kV O/H T-off Circuit of PPk-1 to Rewari Line(Dabri Crossing to Pankha Road) by laying of 02 Nos. 66KV 3Cx300sq.mm. XLPE cable Route Length - 1400 M.

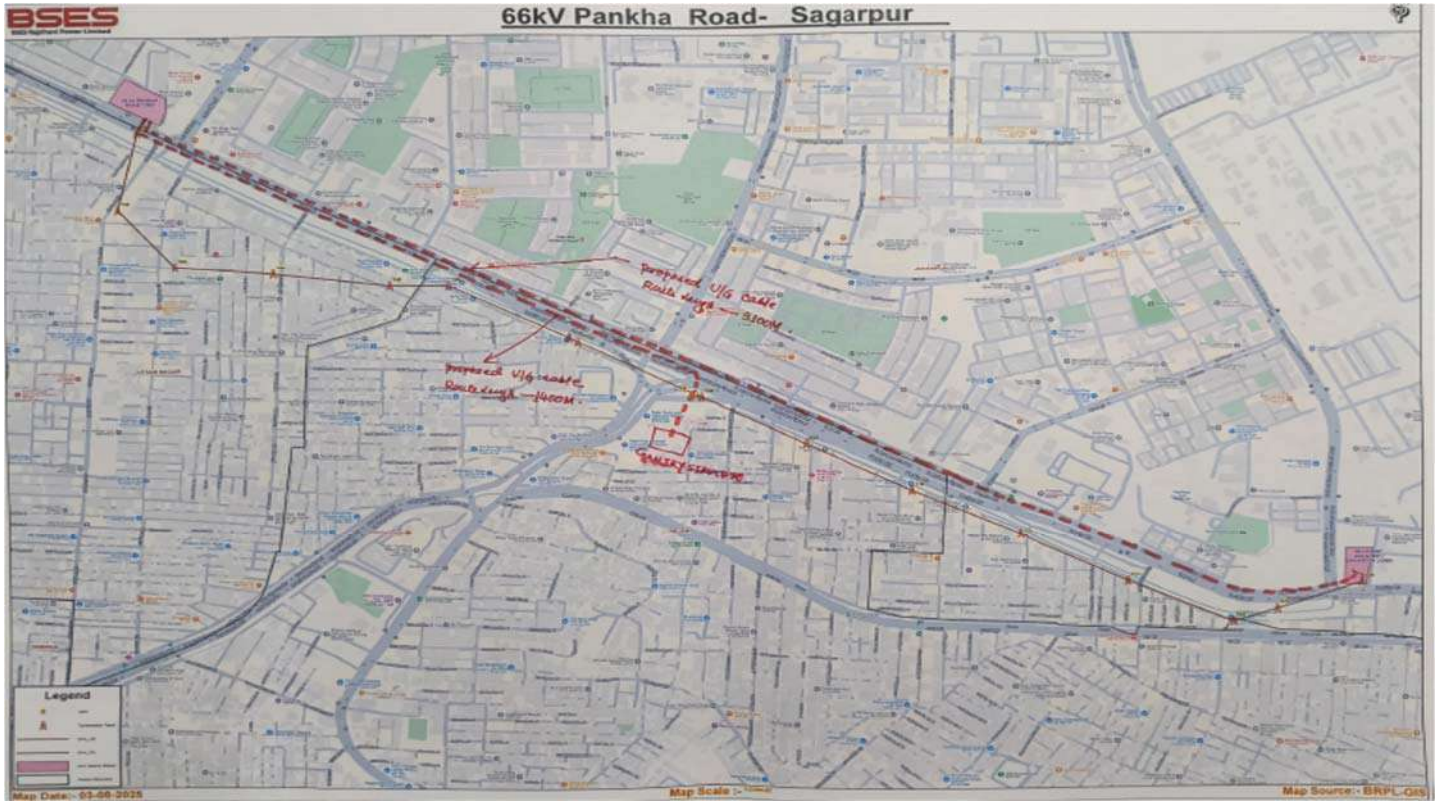

Scheme no- 7B: Estimate for conversion of 33 kV O/H Paschim Vihar -Mukharjee ckt 3 (T-OFF Chaukhandi) by laying of 3Cx400 sq.mm. XLPE Cables (2 nos cable) from Paschim vihar grid to keshopur metro station (Keshopur nalla) & Keshopur sabji mandi to Mukharjee park grid having route length 2000 M & 3000 M.

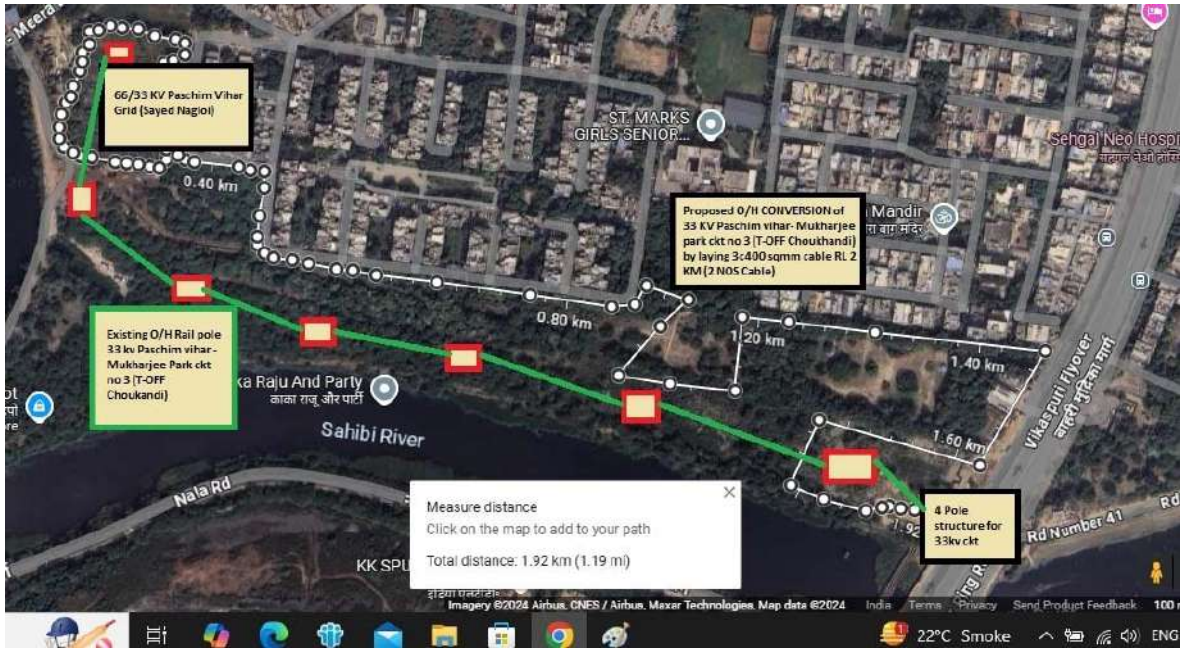


33 kv 4 POLE Rail structure
33 kv Choukhandi grid
0/H RAIL POLE convesion of 33 KV Paschim vihar - Mukharjee Park Ckt no 3 (T-OFF Chaukhandi) by Laying of 3C400 SQMM XLPE Cable Route Length 3 km (2 nos cable)
Measure distance
Click on the map to add to your path
Total distance: 2.90 km (1.80 mi)
33 KV Mukharjee Park Grid
TILAK VIHAR C-BLOCK
Sheikh bhai Clothing
A1Z classic GYM
Bhatta Sahib Rd
J Block Rd
Street Number 4
Maddi Wali Gali
Chand Nagar Main Rd
Gurudwara Rd
Nala
Street No. 19
Gali Number 17
Street No. 1
Gali No. 2
Gali No. 4
Gali No. 6

Scheme no- 7A: Estimate for conversion of 33 kV D/C O/H Peeragarhi -Mukharjee ckt 1 & 2 Tower line by laying of 3Cx400 sq.mm. XLPE Cables (4 nos cable) from Tower no 1 in front of GGSH to Mukharjee Park Grid having Route length-2800 M.



BSES

TECHNICAL SPECIFICATION

FOR

LAYING OF 66 kV / 33 kV / 11 kV / 1.1 KV GRADE PVC / XLPE CABLES

Specification no: GN101-03-SP-06-03

BSES RAJDHANI POWER LTD			
Prepared by	Pronab Bairagi		Rev : 03
Reviewed by	Amit Tomar	31.10.17	Date : 31.10.2017
Approved by	Vijay Panpalia		Pages : 44
Registered Office: BSES Bhavan, Nehru Place, Delhi - 110019			

Index

General Specification 3
1.0.0 Codes & standards 3
2.0.0 Design Guidelines & Parameters for Cable laying.....3
3.0.0 General Guidelines for Laying Cables.....7
4.0.0 Testing 14
5.0.0 Progress Reporting 15
6.0.0 Drawing, Data & manuals.....15
7.0.0 Deviations.....16

Annexure # 1 – DEVIATION REPORT FORMAT.....16
Annexure # 2 – DC HIGH VOLTAGE TEST 16
Annexure # 3 – CABLE TRENCH DETAILS 17
Annexure # 4 – STANDARD ROAD PROFILE 18
Annexure # 5 – ROAD RESTORATION SECTIONAL DRAWINGS.....20
Annexure # 6 – DRAWINGS (CABLE TRENCH AND RCC CABLE COVER).....23
Annexure # 7 – BARRICADING AND SAFETY…….38
Annexure # 8 – ROUTE MARKER AND BARRICADING DRAWING…….38
Annexure # 9- NOTE FOR HDPE PIPE DIAMETER IN CABLE LAYING.....43

General Specification

1.0 Codes & standards

Materials, equipment and methods used in the Laying of 11/33/66KV Cable shall conform to the latest edition of following –

S. No.	Reference No.	Name of Standard
1		Indian Electricity Rules, 1956
2		Indian Electricity Act, 1910
3		Indian Electricity Supply Act, 1948
4		Electricity Laws Act, 1991
5		National Electrical Code (Indian standards Institution)
6	IS 1255	Code of practice for installation and maintenance of Power Cable upto and Including 33KV rating.
7	IS 1554	PVC Insulated Electrical Cables upto 11KV
8	IS 2274	Code of Practice for electrical wiring installation – system voltage exceeding 650V
9	IS 7098 Part II	Crosslinked Polyethylene Insulated PVC sheathed cables for working voltages from 3.3KV upto and including 33KV
10	IS 7098 Part III	Crosslinked Polyethylene Insulated PVC sheathed cables for working voltages from 66KV upto and including 220KV
11	IS 5820	Specification of precast concrete Cable cover.

2.0 Design guidelines and Parameter for cable laying-

S. No.	Parameter	Details
2.1	Selection of Cable Route	The cable route selection shall be done by the concerned supervising engineer by first conducting route survey and selecting a route along with contractor keeping followings in mind: -The side of road which presents the least obstacles and the fewest roadways crossings. -The future consumers and existing cables in the route may influence the cable route. -Railway, road crossings, MCD and other government agencies may also influence in selection of cable route. -Plans for future building projects should be considered. -The route shall be as far as possible away from parallel running gas, water pipes and telephone/telecommunication cables.
2.2	Site Preparation	a) Barricading: • The identified cable route shall be barricaded continually before excavation. • Barricading shall be as drawing laid • Open Trench method shall be adopted as far as possible for trench preparation. b) Excavated Earth:

		• The excavated earth shall be so stored at site, that it shall not cause trouble to running traffic • All excavated earth shall be stored within the barricaded area. • c) Full height fence, barriers, barricades etc. shall be erected around the site in order to prevent the working area from the risk of accidents due to speedy vehicular movement. Same the way barricades protect the road users from the danger due to construction equipment and temporary structures. d) The structure dimensions of the barricades , material and composition, its colour scheme, BSES logo and details shall be in accordance with specification and drawing laid down in the tender documents. e) All the barricades shall be erected as per the design requirements of employer, numbered painted and maintained in good condition and also barricade in charge maintain a barricade register at site. f) All barricades shall be conspicuously seen in the dark/night time by the road users so that no vehicle hits the barricades. Conspicuity shall be ensured by affixing retro reflective strips of required size and shape at appropriate angle at bottom and middle portion of the barricades at a minimum gap of 1000 mm. In addition minimum one red light /red blinker and red beacon light should be placed at the top of each barricade. g) PPP to be provided by vendor to all workers and engineers. **h) Also refer Annexure- 7: Barricading and Safety**
2.3	Clearance	The desired minimum clearances are as follows – - Power cable to power cable – A minimum clearance equal to diameter shall be maintained. Trench drawings shall be referred to for guidance. - Power Cable to control cables – 0.2 M - Power cable to communication cable – 0.3M - Power cable to gas/water main – 0.3 M
2.4	Depth of Cable Laying	The desired minimum depth of laying from ground surface to the top of cable shall be: 650 / 1100V grade XLPE Cables – 75 cm 6.35 / 11KV grade XLPE Cables – 90 cm Low voltage and Control cable - 75 cm 19 / 33KV grade XLPE Cables - 1.2 M 38 / 66KV grade XLPE Cables - 1.5 M Cables at Road crossing - 1.0 M (min.) Cables at railways level crossings (measured from bottom of sleepers to the top of Pipe) - 1.0 M (min.) Whenever there is any obstacle at the laying depth, the cable should be lowered/ raised to cross the obstacle. However variation in the depth is to be approved by BSES. The Contractor shall provide the same in deviation report.
2.5	Width of Cable	The width and depth of Cable Trenches shall depend upon number of

	trenches	circuits and Voltage Grade. Annexure # 3 and drawings of this specification shall be followed.
2.6	Bending Radius of Cables	While pulling of the Cable from the drum or during laying following minimum bending radius shall be maintained so that the cable, in particular the insulation does not get damaged – A) Single Core Cables (PVC & XLPE) Upto 1.1KV grade – 15 X D Above 11KV grade - 20 X D B) Multi Core Cables (PVC & XLPE) Upto 1.1KV grade - 12 X D Above 1.1KV grade – 15 X D Where 'D' is overall diameter of the cable.
2.7	Maximum permissible Tensile Strength for Cables	For cables pulled with Stocking PVC and XLPE SWA Armoured cables P = 30 X D PVC and XLPE AWA Armoured cables P = 20 X D Where P= pulling force in Kgrm, D= Diameter of Cable in mm For Cables pulled by Cable eyes Aluminium conductor – 30 N/mm2 = 3 Kg/sq. mm Copper conductors - 50N/mm2 = 5 Kg/sq. mm Permissible force is calculated by multiplying the above values by cross sectional area (CSA) of conductor of each core and then number of cores.
2.8	Methods of Laying	a) Cables shall be laid in direct in ground, in trenches excavated therein and shall be protected with covers as given in the drawing. Cables shall also be drawn into pipes of ducts or laid in the formed trenches or troughs or on racks or supported in trays or cleats as required by the site exigencies. Where the cables are laid in the formed trenches, the installation shall include removal and replacement of the trench covers and the provision of temporary protective covers on the trenches where they cross the access ways. b) HDPE (PN6,PE80) or RCC ducts shall be used where cable cross roads and railways tracks. Spare ducts for future extensions should be provided. Spare duct should be sealed off. Buried ducts or ducting blocks shall project into footpath or upto the edge of road, where there is no footpath, to permit smooth entry of cable without undue bending. The diameter of the cable conduit or pipe or duct should be at least 1.5 times the outer diameter of the cable. Angular alignment of the duct across road crossings shall be predetermined to maintain safe bending radius when direction of cable trench changes before or after the road. c) The contractor shall lay cable by Horizontal direct drilling (HDD) in main roads and highway with heavy traffic, passage to public property where excavation is not possible. Contractor shall take approval for laying of cable by means of HDD wherever required from the supervising engineer. The cable laid by HDD shall be

		minimized so that it doesn't exceed by 12% of total route length. This is to avoid De-rating of Cables. d) Unless approved by BSES, the contractor shall lay the cables, direct in ground, in single layer. The cables shall be laid with the pre-determined and approved cable route. e) Spacing shall be maintained uniformly between the cables all along the length including the bends, as approved by BSES. To maintain the spacing, suitable non-metallic formers shall be placed uniformly with spacing not exceeding 5 meters. Every bend shall have at least one spacer. f) 75 mm of the sand bed shall be placed at the bottom of cable trench. g) After the cables have been laid the trench shall be filled with the sand and shall be well rammed to a level not less than 75 mm above the top of the cables all throughout the route. h) To protect the cables against external mechanical damage, which may be caused by other agencies, the cable shall be protected by suitable cover. (for drawing of RCC cable cover refer annexure VI). i) The type of the covers shall be as under - 1.1KV Cables – Single layer of brick thickness not less than 75 mm (3 inch) - 11KV Cables – sand stone of thickness not less than 75mm (3 inch). - 33KV Cables shall be protected by reinforced concrete cover of width 300 mm as per attached drawing with thickness not less than 50mm. - 66KV Cables shall be protected by reinforced concrete cover as per attached drawing with thickness not less than 50mm. The RCC cable cover shall be embossed as "BSES EHV CABLE". j) Back fill to be filled up to 75mm and the warning tape shall be installed continuously. The tape shall be yellow in colour with Black / Red lettering of minimum 20mm height. The approved warning message shall be written in English and Hindi/ local language. The minimum thickness and width of the tape should be 300 microns and 150 mm respectively. k) The trench shall be filled-up by loose soft soil (300mm) and Excavated soil as indicated in drawings.
2.9	Cable over	On Bridges the cables are generally supported on wooden cleats and

	Bridges	clamped on steel supports at regular intervals. The cables laid on bridges shall be provided with Sun shield. Approval from appropriate authorities (PWD/railways) as applicable shall be taken by contractor.
2.10	Laying of Single Core Cables	a) The single core cables shall be laid in trefoil formation. Single core cables can be laid individually in HDPE pipe in case of HDD only. (Details of HDPE Pipe as per Annexure-9) b) For single core cables laid in trefoil formation, plastic cable ties shall be used at interval of 1.0 (one) meter throughout the cable length to maintain the trefoil arrangement. c) To balance the inductance, the phase sequence in trefoil format shall be maintained by vendor (for double circuit) d) To prevent magnetic losses (eddy current and hysteresis losses), the base plate of the panels or the terminal box of the equipments, shall have aluminium plate. In case the entry into the building is through GI pipe, a "slit" in the GI pipe shall be necessary. Alternatively GI pipes may altogether be avoided and non-metallic pipes such as PVC or HDPE pipe shall be used. Concrete pipes having steel reinforcement (RCC pipe) are not to be used.
2.11	Earthing of Single Core Cables	a) Single point bonded earthing shall be employed to prevent flow of induced circulating current in the armour and screen and consequential de-rating of cables for feeder less than 2.0 KM. b) For feeder length more than 2 KM, mid point earthing shall be provided.
2.12	Violation of barricading guideline and safety norms	On violation of barricading guideline and safety norms, a fine of Rs.5000 /day shall be imposed. BRPL inspector/engineer in-charge shall be empowered to impose the above penalty.

3.0 General guidelines for Laying Cables

S. No.	Parameter	Details
3.1	General	a) Laying of the cables and handling of the same shall be undertaken, at all times, by adequate staff suitably trained and supplied with all the necessary plant, equipment and tools. b) The contractor shall be responsible for all the route survey, establishment of the position of the joints as per the site exigencies and the drum lengths of cables to be laid. While carrying out the route survey the contractor shall take into account the obstacles on the route whether above or below ground. The cable shall be planned to be laid in an orderly formation, free from unnecessary bends and crossings c) The contractor shall submit a drawing for the complete scheme

		showing the entire route, road crossings, location of joints and also the arrangement of cables to be laid. In case due to site exigencies, cables have to cross over within the trench, the same shall be shown in the drawing. For each and every job, these drawings shall be approved by BSES, prior to commencement of work. d) BSES shall arrange for all the material and manpower required for jointing and end termination. The Contractor shall provide pit, carry out excavation for creation of working space required for jointing by the jointer. All civil works, structural work, clamping and earthing shall be carried out by the contractor, so that the cables and accessories perform satisfactorily during the entire life time. e) The entry and exit of the cables into the building shall be through RCC or GI pipe except for single core cables, which shall be properly sealed and shall be duly supported as per the method and technique approved by BSES, so that the outer sheath of the cable does not get damaged at the entry and exit points. The sealing should be of adequate length so that it minimizes the risk of spreading of fire or ingress of water.
3.2	Handling and Storage of Cable drums (All empty drums are returnable)	a) The cable drums shall be transported upright, so that the weight is distributed on both the flanges. Under no circumstances the cable drum may be laid on its side. During transportation the drums must be properly secured. The cable drums should never be dropped from Lorry or a trailer, so as to prevent damage to the cable drum and also to the cable. Ramp may be used for unloading. The drums may be rolled over short distance, provided the correct direction of rolling as provided on the drum is observed. Alternatively, a mobile crane should be used for lifting and lowering the drum. A chain-pulley arrangement may also be used to lift the drums and deposit the same on ground if required. b) In case the drums are to be stored prior to cable laying, they should be arranged in such a way to leave some space between them for air circulation. It is desirable that the drums stand on battens placed directly under the flanges. Overhead covering is not essential except in heavy rainfall areas or during monsoon. Cable should however be protected from direct rays of sun by leaving the battens on or by providing some form of sunshade. In no case the drums shall be stored in a flat position with flanges horizontal. c) For transportation of the cable drums from storage site to work site, the drum should be mounted on a trailer or an open lorry and unloaded by mobile cranes. d) After cable laying, empty cable drums shall be taken return back by vendor from site at their own risk and cost. Cost of empty drums shall be deducted from vendor account during final settlement.
3.3	Cable Laying	a) The ground over which the drum is positioned at site should be

		properly consolidated and jacks placed on both sizes of the drum to make the pay-off arrangement stable. Suitable arrangement be made to stop the drum rotation, during cable laying preferably by square wooden poles kept temporarily pivoted over cable roller under the flanges which when required can be applied on the flange as a brake by personnel manning the drum. b) The cable should always be paved off from the top of the drum. The drum must be positioned in such a way that the arrow on the drum points opposite to the direction of rotation marked on the drum. c) It must be ensured that the cable is not dragged over sharp object or on the road surface, so as to avoid damage to the outer sheath of the cable. d) The pulling method to be used shall be approved by BSES. Cable supplier's recommended maximum pulling tension shall not be exceeded. e) Rollers shall be placed at intervals and the cable shall be pulled over the rollers. The rollers shall be kept lubricated so that they rotate freely, minimize friction to the cable in motion. Rollers shall be positioned at the bends to minimize side wall friction. The contractor shall ensure that PVC/HDPE sheath of cable is free from damage due to abrasion. f) The cable should not be pulled out from the drum by lifting of the coil while the drum is lying flat on the flange. This leads to twisting of the armour and cores resulting in permanent damage to the cable. g) To avoid ingress of moisture, it must be observed that the end capping of the cables is not damaged. Cut pieces of the cables must be capped immediately, before laying of the same is taken-up.
3.4	Excavation of the Trenches	a) The excavation of the trenches shall be commenced, with proper co-ordination with BSES, so that all the necessary clearances for the route are already obtained from the competent authorities, well in time. b) Before opening of the section of the trench, the contractor shall satisfy himself that the line of the trench is clear of underground obstructions, by taking out trial pits on the line of the trench. c) The exact location of each trench shall be approved on site by BSES. The trenches shall be kept as straight as possible and each trench shall be excavated to approved formation and dimensions. If necessary, the trenches shall be adequate shored by wooden planks and bracing to avoid trench cave-ins which would cause injury to the persons and also damage the cables laid. d) The bottom of each trench shall be firm and of smooth contour. The contractor shall take reasonable precautions to prevent damage to the highway or ground surface from a slip or breaking away of the sides of the trench. e) The trench excavation and filling in shall be so executed that all

		walls, roads, sewers, drains, pipes, cables, structures, places and things shall be reasonably secured against risk of subsidence or injury and shall be carried out to the satisfaction of the authorities concerned. Should, however, a damage to an existing or other services be made, the Contractor will arrange and pay for any necessary repair, to make good the damages. f) Where trenches pass from a footway to a roadway or at other positions where a change of level is necessary, the bottom of the trench shall rise or fall gradually. The rate of rise or fall shall be approved by BSES. g) Contractor shall ensure that during excavation and until restoration has been completed, for reasonable access of persons and vehicles to property or places adjacent to the route. h) When the excavation of the trenches has been accurately executed, the contractor shall inform BSES for approval. Laying of cables or building of structure shall not be started until the contractor has been advised by BSES to proceed with the work.
3.5	Excavated material	a) The materials excavated from each trench shall be placed so as to prevent nuisance or damage to adjacent ditches, drains fences, gateways and other property or things. Excavated material shall be stacked so as to avoid undue interference with traffic. b) Where, owing to traffic or for reasons of safety or other considerations, this is not permissible, the excavated material shall be removed from the site and returned for refilling the trench on completion of laying; surplus material shall be disposed off by the contractor at his own cost.
3.6	Pipes and Ducts	a) Care shall be taken to make the bend of the pipes or duct lines as easy as practicable and in no case of radius less than 3 meters. Where approved, split pipes may be used on bends, the pipes being fitted round the cable after laying. b) All road crossings shall be ducted. This applies to present and future roads as indicated on the route plans. The pipes and the ducts shall be laid in an approved manner and shall be surrounded by 150 mm of PCC (1:2:4) c) Ducts under the road shall be provided by the contractor, by non-disruptive method, if road cutting is not permitted by the concerned authorities Cable laying shall be done by Horizontal Direct drilling method (HDD). d) The cables shall be suitably protected at entry and exit from the pipes, so that the outer sheath does not come in contact with the edges of the pipes / ducts. The pipes and ducts shall have slope so that the seepage water can drain through the small opening provided on the lower side of the pipe sealing. e) The pipes and ducts shall be secured to the base at both ends and at regular interval, throughout the length, so that at no point the ducts or pipes get suspended over the threaded cable, and damage the same, thus defeating the very purpose of providing the pipe / duct.

		f) At all road crossings at least one spare duct / pipe shall be provided for future use. The pipe shall be thoroughly cleaned of obstructions. A draw wire or rope shall be left in each pipe to facilitate the drawing in of the cables. The duct end shall be sealed temporarily to prevent the entry of foreign matter. End caps and permanent markers shall be placed flush with footpath / roadways at both the ends. The pipes and ducts shall be cleaned again immediately before the cables are drawn in. g) The internal diameter of the pipe / duct should be such that the cables occupy only 40% of the area of the pipe / duct to avoid de-rating.
3.7	Joint Bays	The contractor shall provide all help so as to enable jointers to carry out their work efficiently and expeditiously. The method of securing and supporting cable joints and cables also the bonding and earthing thereof, shall be detailed on the drawing. The details shall be approved by BSES prior to commencement or work. The joint position should be staggered.
3.8	Back filling of trenches	a) Filling in of trenches shall not be commenced until BSES has inspected and approved the cables and accessories at site. The inspection should be got done on daily basis so that the trenches do not remain open unnecessarily, to avoid inconvenience to public. b) The trench shall be backfilled after putting all protections for cables. c) Soft soil shall be backfilled for 300 mm above the cable protection cover. d) Caution Tape shall be laid all along the cable route above the soft soil filling. e) Complete backfilling shall be done above the caution tape.
3.9	temporary Reinstatement	a) Where cables routes are in public highways, footpaths, gardens etc., the method of reinstatement will be subject to approval by MCD. All costs incurred will be at the contractor's expenses. b) The contractor shall be responsible for proper permanent reinstatement of the upper levels, which shall be carried out to the satisfaction of BSES and the MCD authorities concerned. c) Before finally leaving site, permanent reinstatement shall be executed by the contractor to the approval of MCD and the property owners and all costs incurred shall be to the contractor's account.
3.10	Permanent Reinstatement of Public Road,	a) In public roads and footways the surfaces and foundations shall be temporarily reinstated by the contractor. After settlement, temporary reinstatement material shall be removed as necessary and the permanent reinstatement shall be carried out to the approval of the appropriate highway authority / MCD. Stone and pre-cast concrete paving kerbs and channels shall also be finally reinstated by the contractor. b) Temporary reinstatement shall be maintained by the contractor until commencement of final reinstatement to ensure that the surface is always safe for the passage of pedestrians and vehicular traffic.

3.11	Identification	All cables shall be identified below the gland at each end, at joint position and at approved positions by means of bands engraved or punched with cable no. feeder name, size of cable, number of cores, phase colour etc. The bands shall be secured fastened in a permanent manner, and shall be made of material able to resist corrosion, dampness and mechanical damage.
3.12	Cable Route Markers	All cables routes shall have markers at suitable location with a gap not exceeding 30 meters. The route markers shall be approved design. Additional markers shall be provided at joint locations with approved markings.
3.13	Cable supports / Clamps	a) The contractor shall supply and install all the supports, racks, trays, cleats, saddles, clips and other parts required to carry and secure the cables, without risk so that there is no undue mechanical load or stress due to weight of the cable at each end. Cleats, saddles and clips shall be of the design as approved by BSES. No cable shall be laid on the trench floor. They shall be run in a neat and orderly manner and the crossing of cables within the trench shall be avoided as far as possible. Where cable runs unavoidably cross, a suitable supporting arrangement shall be provided to maintain an adequate gap between the cables b) Every cable shall be supported at a point not more than 500 mm from its termination.
3.14	Installation of Cables in tunnels / basement / below the panels etc	a) The design of cable support for cables installed in air in cable tunnels, basements etc. shall consist of vertical steel members spaced at approved interval and secured to the walls, floors and ceilings as necessary by means of bolts either cemented in position or expanded into cored holes. Each vertical support shall have bolted to it a number of steel brackets spaced at the intervals and designed to support and retain trays constructed of galvanized sheet steel of adequate section to carry the weight of the cables, plus space for an additional quantity of future cables at least 25% by weight and dimensions in excess of the cables installed under the contract and an additional load of 100 kg at the extremity without distortion. The trays shall be designed with raised edges to retain the cables and shall incorporate an interlocking feature so as to prevent movement between supports. b) The design and construction of all cable cleating and supporting arrangements shall suit the cable system design. The spacing of cable supports shall be approved by BSES. c) Cable run on trays shall be neatly dressed and where not provided with cleats shall be secured by heavy gauge, type approved metal reinforced, clips or saddles. Not more than six cables shall be embraced by one clip. d) Mild steel of appropriate sections, duly painted in an approved manner, shall be used for fabrication of cable supports. The steel shall be free from blisters, scales, laminations or other defects. Before final painting, the steel sections shall be provided with double coat of red primer.

3.15	Cable Protection at overhead Towers or Poles	Where the cables terminate on overhead line poles or towers located outside substation compounds the contractor shall provide suitable cable supporting galvanized steel work attached to the pole or tower and comprising backboard, runners, sheet, steel cover of not less than 3.0mm thickness, stays, cable cleats, anti climbing guard and all incidental items to provide secure protection for the cables. Isolators and Lightning arrestor if required to be installed shall be provided as free issue item to the contractor, however the erection and steel structure required shall be in scope of the contractor.
3.16	Sun Shades	All cables shall be protected from direct solar radiation by ventilated sun shields as approved by BSES.
3.17	Route Plan	a) BSES intents to show all the cable routes, location of joints and other underground obstructions on a GPS map. b) During the progress of the contract works the contractor shall record on a set of route plans and cross section drawings of an approved form, these details so that the same can be transferred on the GPS maps. Such particulars will allow an accurate reference to be made in the case of any fault or projected modification. These records shall show, amongst other data, both indoors and outdoors the exact position of every joint, cable end termination and also the particulars of the depth of the trench, the arrangement of the cables, with cable numbers and the position of all obstructions revealed during the course of excavations. These completed records shall be submitted to BSES within 15 days of completion of any particular route/feeder. The final bill shall not be processed by BSES unless this activity has been completed to the entire satisfaction of BSES
3.18	Site Facilities to be maintained by the Contractor	a) The contractor shall arrange for all the tools and tackles required for cable laying as per this specification. BSES shall arrange for all the material and manpower required for jointing and end termination. b) Illumination and Power supply shall be arranged by the contractor so that the work can be carried out round the clock. c) The contractor shall maintain functional dewatering pumping facility with suitable power supply so as to protect the cables and the joints from ingress of water due to rain or otherwise d) The contractor shall make arrangement to provide suitable scaffolding arrangement to carry out the termination work e) The contractor shall carry out proper barricading of the dug cable route and the joint bays and shall take all necessary precautions to avoid any public hazard f) Also refer Annexure-7: Barricading and Safety.
3.19	Type of Roads and guidelines for road restoration	The typical section of type of Roads (based on width) under PWD and MCD are :- - 20 Feet Wide road - 30 Feet wide road - 40 to 60 Feet Road - Other (which include Kota stone, Agra stone, Cement concrete, interlocking paving tiles, brick road, chequered tiles

		and asphalted road) The drawing are shown in annexure IV The guidelines for road restoration for various type of roads and surfaces are indicated in annexure V as :- - Bituminous road Type I (category I & II) - Bituminous road Type II (category III) - Cement concrete road - Kota/Rajasthan stone Road - Brick Road - Interlocking paving tiles. - Agra stone road - Chequered tiles road - Asphalted road

4.0 Testing

S. No.	Parameter	Details
4.1	Tests to be carried out during and after completion of Cable Laying	Testing of cable before jointing – - Cable shall be tested for Insulation Resistance prior to laying by opening the end and resealing end properly. Testing on complete Cable Installation – a) Insulation resistance of each core shall be measured against all the other cores and the metal screen connected to earth. b) The resistance of the conductor shall be measured. c) DC High voltage. For old cables test voltage shall be 1.5 times rated voltage or less depending on age of cable.(refer annexure # 2 for values) d) Charging of Cable at No-Load at Nominal working voltage for 24 Hours. e) After laying and before termination of cable a sheath test shall be conducted for 66KV Single core Cable as under :- At both ends the cable shall be raised from ground. From the end graphite coat applied over the outer PVC jacket shall be removed with a piece of glass for a length of 300mm. A spiked steel rod with an eye for attaching a wire shall be driven into the ground and connected to a nearby water or hydrant pipe. Insulation resistance of PVC jacket shall be measured between the aluminium wire armour and the spike with a 500/1000V insulation tester. Measured resistance shall not be less than 2.5M OHM per KM. Thereafter 10KV DC shall be applied for one minute in the same way. After the test the armour shall be kept earthed to the steel spike for 15 minutes for discharging residual charge.
4.2	**Statutory**	a) Road cutting permission

	clearance	Road cutting permission shall be taken from competent authority by vendor. How ever official fees shall be paid by BRPL. b) Electrical inspector clearance Electrical Inspector clearance shall be in vendor scope. How ever official fees shall be paid by BRPL.

5.0 Progress Reporting:

S. No.	Parameter	Details
5.1	Detailed Progress report	Progress report to be submitted by Contractor to BSES once in a Week containing i) Excavation status ii) Cable laying status iii) Status of preparedness for Jointing iv) Reason for any delay in total programme v) Details of damage to cable during laying. vi) Progress on final completion / Constraints / Forward path

6.0 Drawing, Data & Manuals:

S. No.	Parameter	Details
6.1	To be submitted After Completion of the Job	As the works is completed the following reports in quadruplicate shall be submitted to BSES for record purpose and shall be incorporated in the 'As constructed Records'. a) Feeder details (sending end, receiving end, SAP number of project etc) - Type of cables, cross section area, rated voltage. Details of construction, cable number & drum number. - Year and month of laying. - Actual total route length, cable length, length between joint to joints or end. - Location of cables and joints in relation to certain fixed reference points, for example buildings, hydrant, boundary stones etc. - Jointing reports detailing the date, weather conditions, jointers and supervising Engineers names, details of type of cable and type of joint or termination, location and joint bay number, ambient temperature. - Results of original electrical measurements and testing on cable installation. - Full written reports will be required of any damage occurring to cable or equipment together with remedial action proposed which will be subject to the approval of BSES.
6.2	Drawing and document sizes	Standard size paper A0, A1, A2, A3, A4

7.0.0 Deviations

Deviations from this Specification shall be stated in writing by the contractor. Written approval shall be obtained from BSES by the contractor. In absence of such a statement, it will be assumed by BSES that the Contractor complies fully with this specification during execution of the job.

Deviation mentioned in any other submitted tender docs like in GTP, QAP, Old PO, old WO, BRPL Standard, vendor standards etc. shall not be considered as a deviation at any stage of contract.

The format for approval of deviation attached in annexure # 1

Annexure # 1 – DEVIATION REPORT FORMAT

S. NO.	Clause No. of Specification	Details about deviation	Reason for deviation	Approved by (Sign & Name)

Annexure # 2 – DC HIGH VOLTAGE TEST

Rated Voltage of cable in KV	Test Voltage Between		Duration in Min.
	Any conductor and metallic sheath / Screen / armour	Conductor to conductor (for unscreened Cables)	
0.65 / 1.1	**3**	**3**	**15 Min**
6.35 / 11	**18**	**30**	
19 / 33	**60**	**----**	
38 / 66	**90**	**----**	

Reference value for DC High voltage Test.

Annexure # 3 – CABLE TRENCH DETAILS

S. No.	Cable Size	Trench		Cable Trench drawing reference
		Width (mm)	**Depth (mm)**	
1	**1.1 kV LT Cables**			
a	3.5Cx150 mm^2 - Single Circuit	**400**	**875**	A – 1 (Drg. # 9)
b	3.5Cx150 mm^2 - Double Circuit	**400**	**875**	A – 1 (Drg. # 9)
c	3.5Cx150 mm^2 - Triple Circuit	**400**	**875**	A – 1 (Drg. # 9)
d	3.5Cx300 mm^2 - Single Circuit	**400**	**875**	A – 1 (Drg. # 8)
e	3.5Cx300 mm^2 - Double Circuit	**400**	**875**	A – 1 (Drg. # 8)
f	3.5Cx300 mm^2 - Triple Circuit	**400**	**875**	A – 1 (Drg. # 8)
2	**11 KV Cables**			
a	3Cx150 / 300 mm^2 - Single Circuit	400	**1055**	A – 2 (Drg. # 6)
b	3Cx150 / 300 mm^2 -Double Circuit	650	**1055**	B – 1 (Drg. # 7)
3	**33 kV Cables**			
a	3Cx400 mm^2 - Single Circuit	**400**	**1235**	A – 3 (Drg. # 3)
b	3Cx400 mm^2 - Double Circuit	**650**	**1235**	B – 2 (Drg. # 4)
c	3Cx400 mm^2 - Quadruple Circuit	**650**	**1235**	B – 2 (Drg. # 5A)
d	3Cx400 mm^2 - Quadruple Circuit	**650**	**1545**	B – 3 (Drg. # 5B)
e	3Cx400 mm^2 - Quadruple Circuit	**1200**	**1235**	C – 1 (Drg. # 5C)
4	**66 kV Cables**			
a	1Cx630/1000 mm^2 - Single Circuit	**650**	**1445**	B – 4 (Drg. # 1)
b	1Cx630/1000 mm^2 - Double circuit	**1200**	**1445**	C – 2 (Drg. # 2)
c	3Cx300 mm^2 - Double circuit	**1200**	**1445**	C – 2 (Drg. # 2A)

Annexure # 4 – Standard Road Profile

STANDARD ROAD PROFILE
20' - 00 " FEET WIDE ROAD (Road type 1)

Sketch 1 of 4

1 **20 mm thick** Pre-Mix Carpet
2 **75 mm thick** WBM 53mm to 22.5 mm stone aggregate
3 **75 mm thick** WBM 63mm to 45 mm stone aggregate
4 **100 mm thick** WBM 90mm to 65 mm stone aggregate
5 Compacted Earth

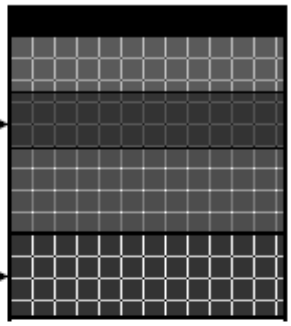

Sketch 2 of 4

30' - 00 " FEET WIDE ROAD (ROAD TYPE II)

1 **20 mm thick** Pre-Mix Carpet
2 **75 mm thick** WBM 53mm to 22.5 mm stone aggregate
3 **75 mm thick** WBM 63mm to 45 mm stone aggregate
4 **100 mm thick** WBM 90mm to 65 mm stone aggregate
5 Compacted Earth

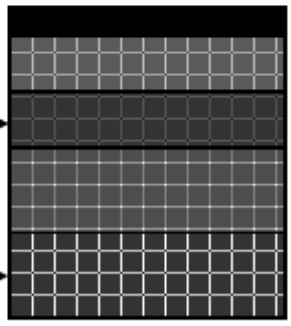

Section X-X '

Sketch 3 of 4

40'-00 " TO 60'-00" FEET WIDE ROAD

1 **50 mm thk.**(Dense Asphaltic coat) (DAC)
2 **50 mm thk.**(Dense Bituminous)
3 **20 mm thick** Pre-Mix Carpet
4 **75 mm thick** WBM 53mm to 22.5 mm stone aggregate
5 **75 mm thick** WBM 63mm to 45 mm stone aggregate
6 **75 mm thick** WBM 63mm to 45 mm stone aggregate
7 **75 mm thick** WBM 63mm to 45 mm stone aggregate
8 **100 mm thick** WBM 90mm to 65 mm stone aggregate
9 Compacted Earth

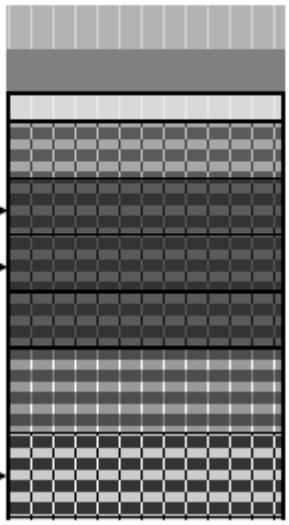

Section A-A '

Sketch 4 of 4

General drawing for cases other than roads.

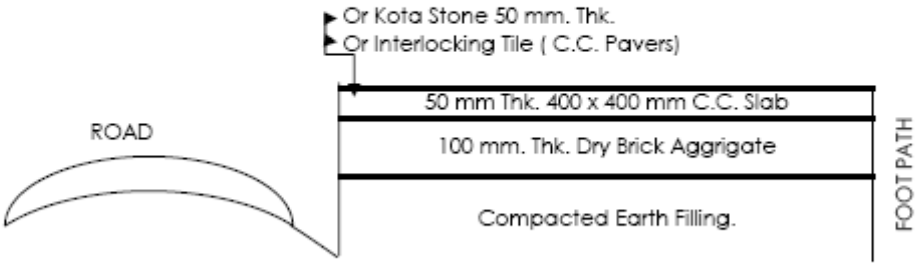

Details of Foot Path Along roads under PWD & MCD.

Annexure # 5 – Road Restoration Sectional Drawing

ROAD RESTORATION SECTIONAL DRAWINGS

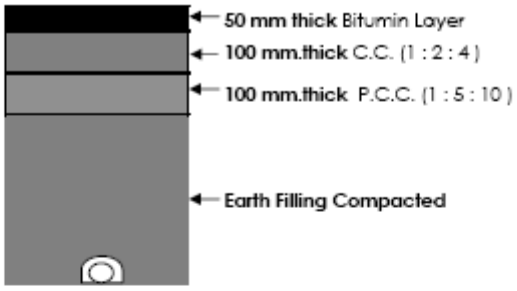

Bituminious Road Type - I (Category 1 & 2) Road width 20 to 30 feet and 30 to 40 feet.

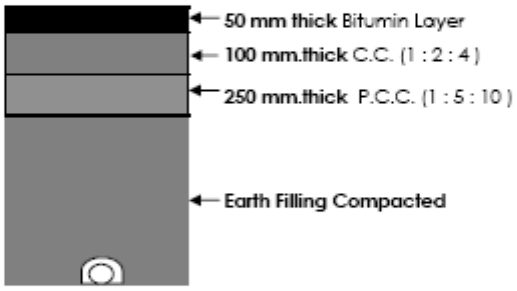

Bituminious Road Type - II (Category 3)

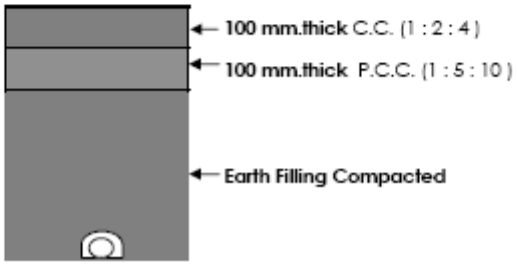

Cement Concrete Road

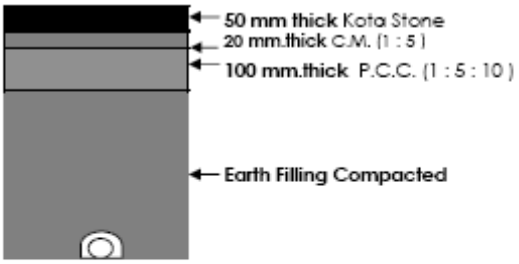

Kota / Rajasthan stone Road

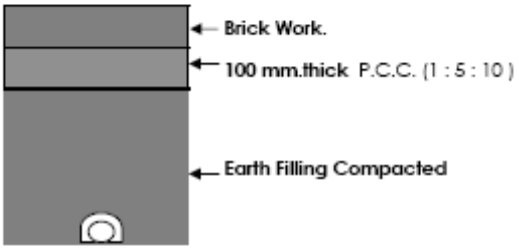

Brick Road

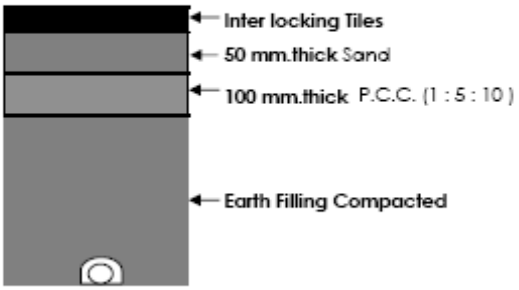

Interlocking Paving Tiles

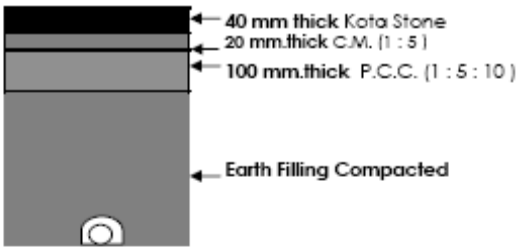

Agra stone Road .

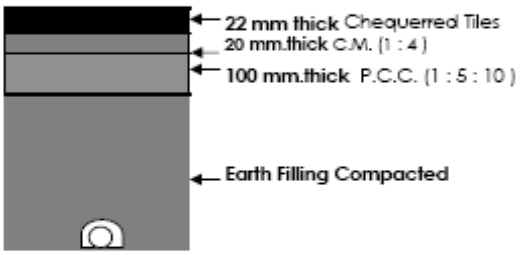

Chequerred Tiles .

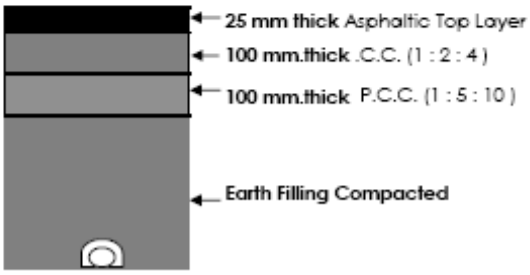

Asphaltic Road .

Annexure # 6 – DRAWINGS (CABLE TRENCH AND RCC CABLE COVER)

DRAWING # 1

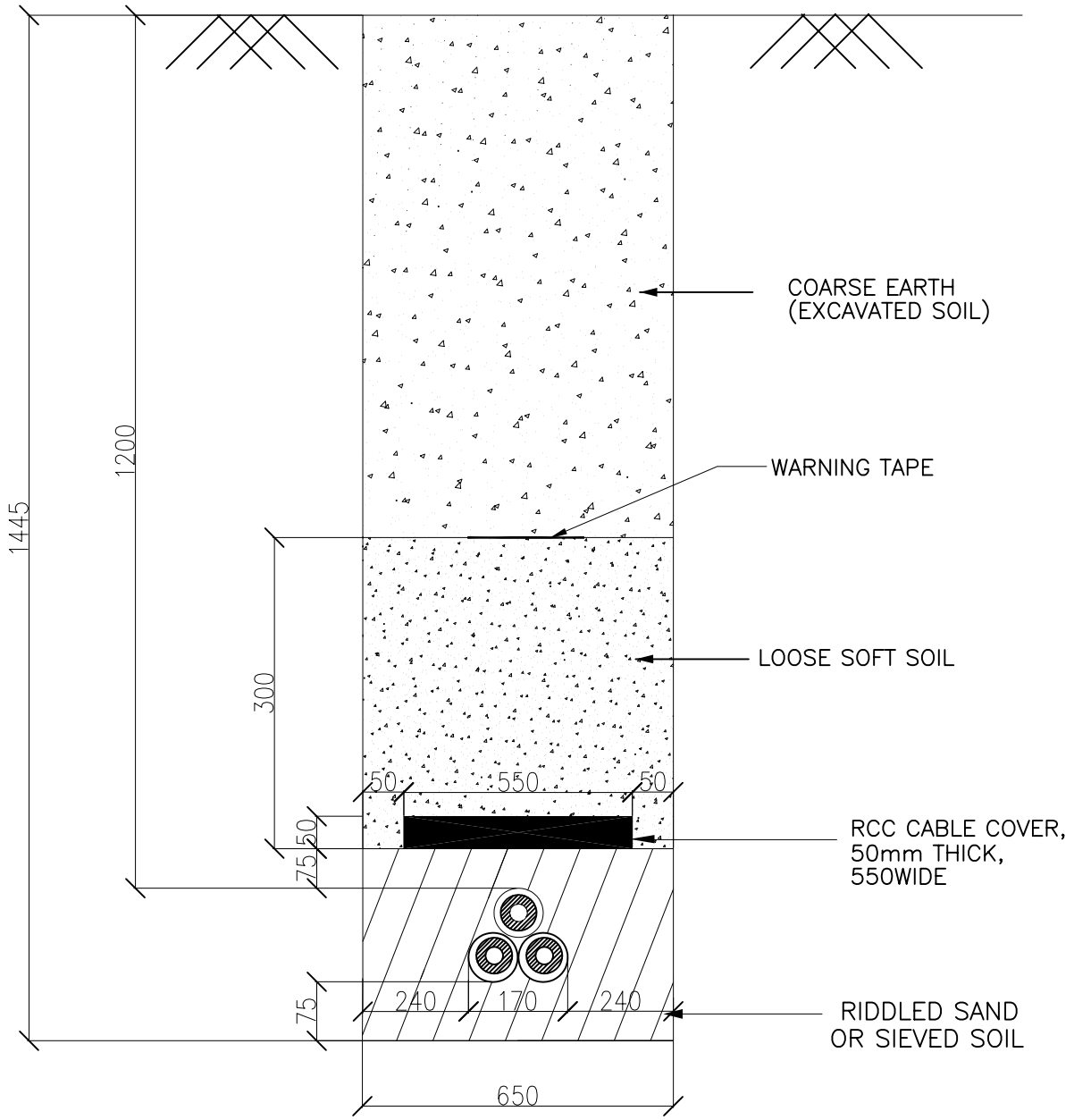

TYPICAL DETAILS FOR 66KV BURRIED CABLE FOR SINGLE CIRCUIT
TYPE – B 4

DRAWN	DS	TITLE:– TRENCH DRAWING FOR 1C X 630 Sq. mm 66KV SINGLE CIRCUIT XLPE CABLE	BSES
CHECKED	SGD		
APPD.	D.GUHA		
DATE			REV. 00
SCALE			

DRAWING # 2

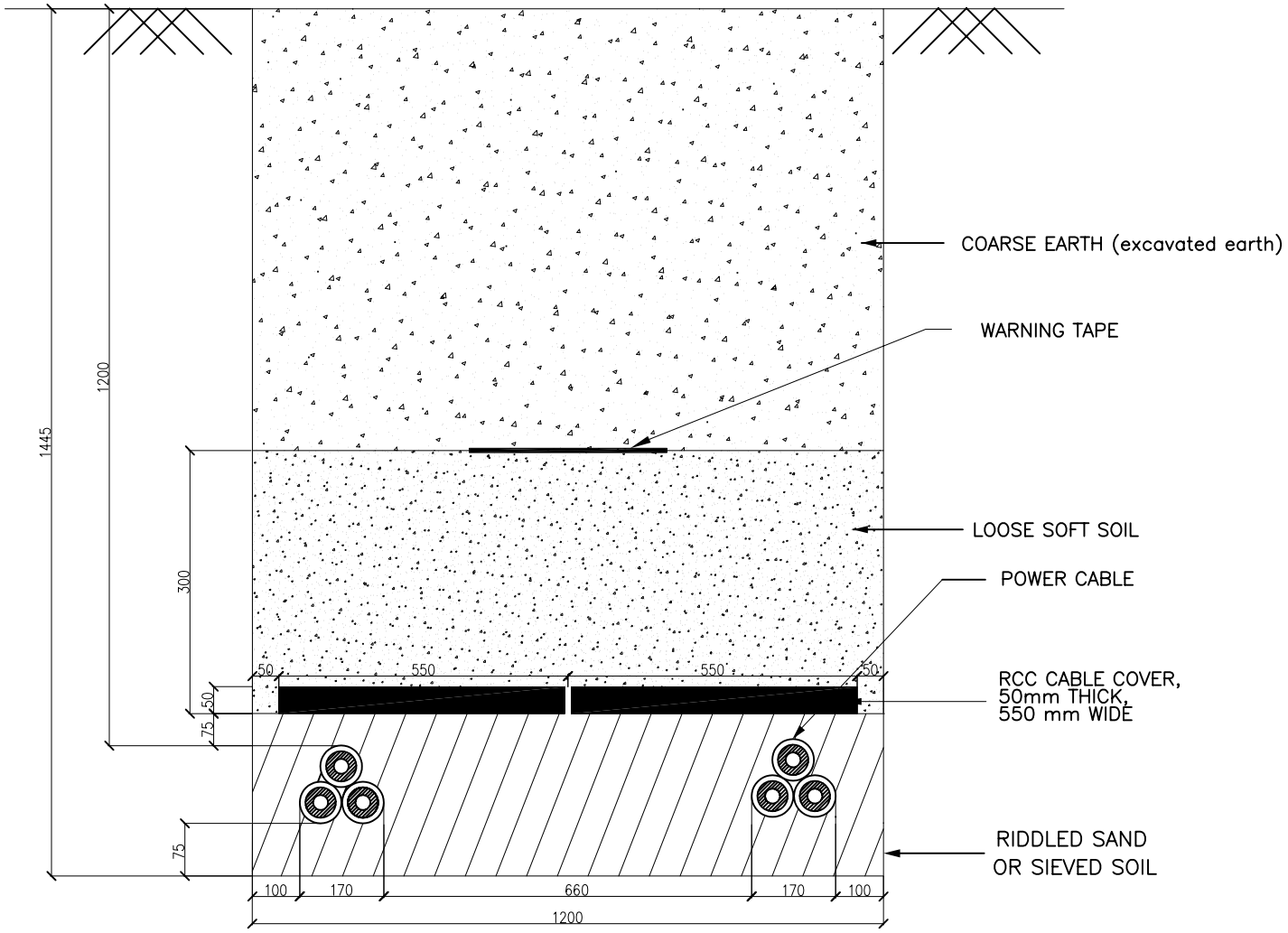

TYPICAL DETAILS FOR 66KV BURRIED CABLE FOR TWO CIRCUIT
TYPE – C 2

DRAWN	DS	TITLE:– TRENCH DRAWING FOR 1C X 630 Sq. mm 66KV DOUBLE CIRCUIT XLPE CABLE	BSES
CHECKED	SGD		
APPD.	D.GUHA		
DATE			REV. 00
SCALE			

DRAWING # 2 A

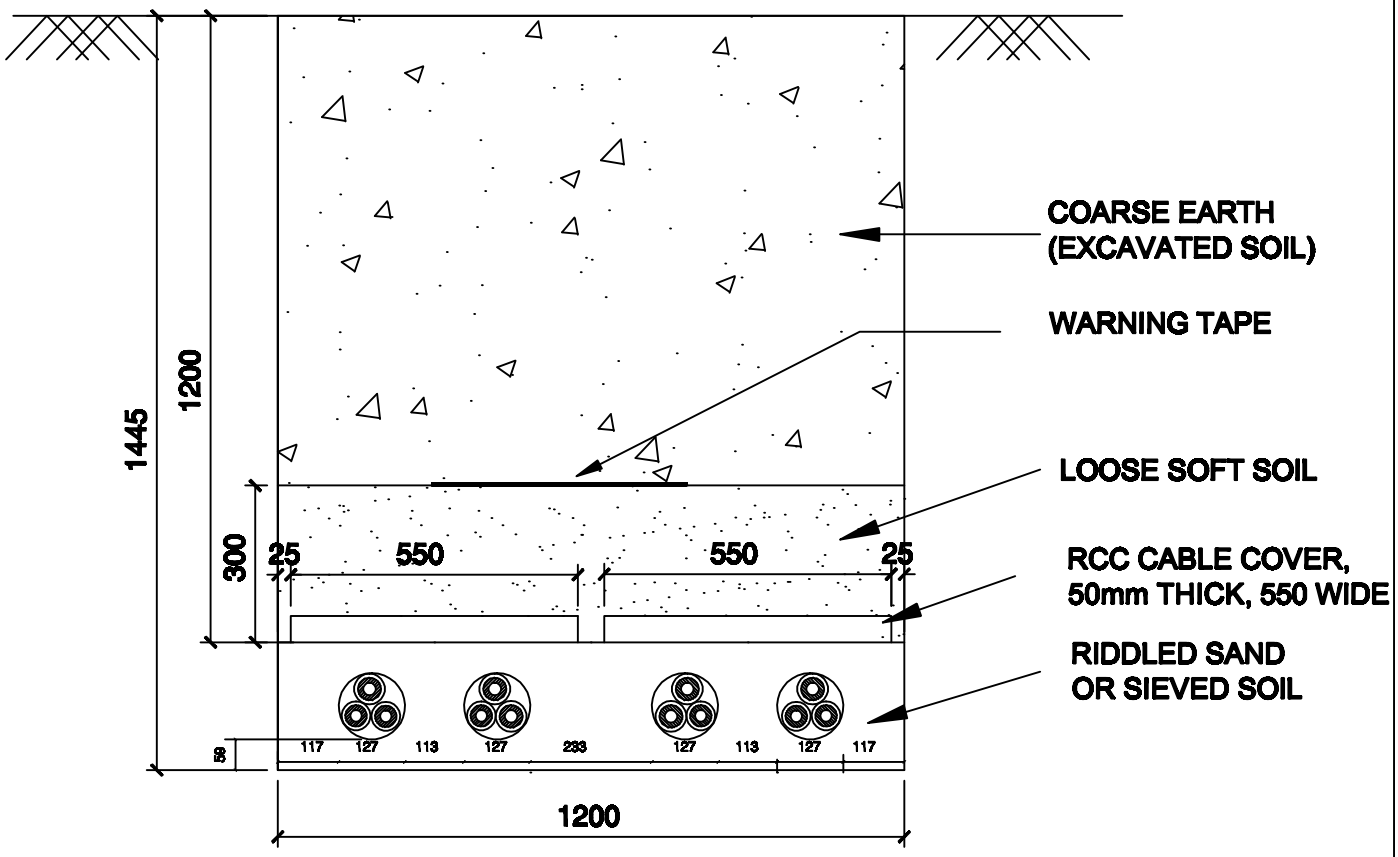

TYPICAL TRENCH SECTION DETAILS FOR 66KV SINGLE CORE 300 Sq. mm. BURRIED CABLE FOR DOUBLE CIRCUIT

TYPE - C 2

DRAWN	SAURABH	TITLE:–	BSES Rajdhani Power Limited
CHECKED	A.S	TYPICAL TRENCH SECTION DETAILS FOR 66KV SINGLE CORE 300 mm BURRIED CABLE FOR DOUBLE CIRCUIT	
APPD.	K.S		
DATE	09.01.15		REV. 00
SCALE			

DRAWING # 3

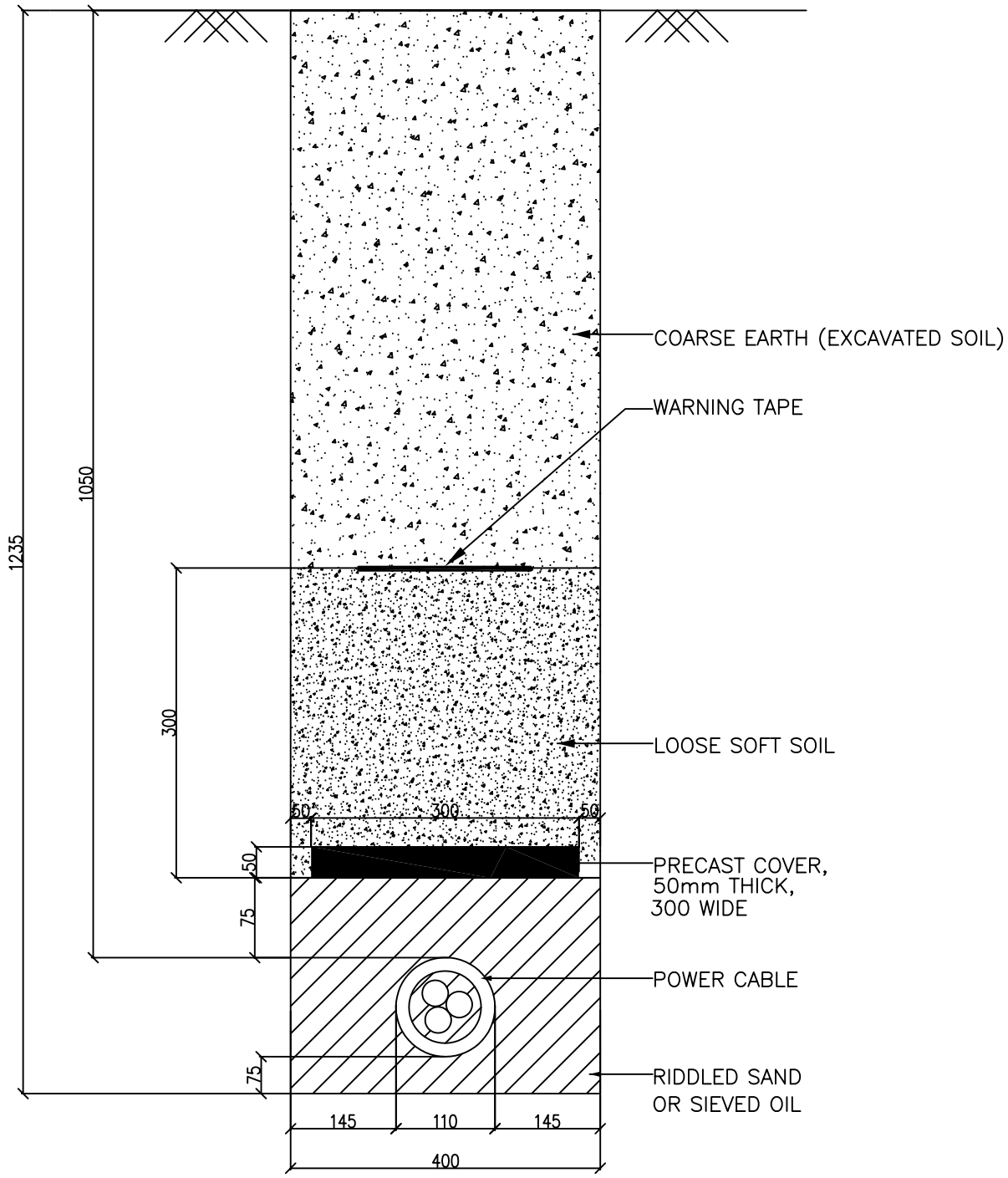

TYPICAL DETAILS FOR 33KV BURRIED CABLE FOR SINGLE CIRCUIT

TYPE – A 3

DRAWN	DS	TITLE:–	BSES
CHECKED	SGD	TRENCH DRAWING FOR	
APPD.	D.GUHA	33KV 3CX 400 mm sq.	
DATE		SINGLE CIRCUIT	REV. 00
SCALE		XLPE CABLE	

DRAWING # 4

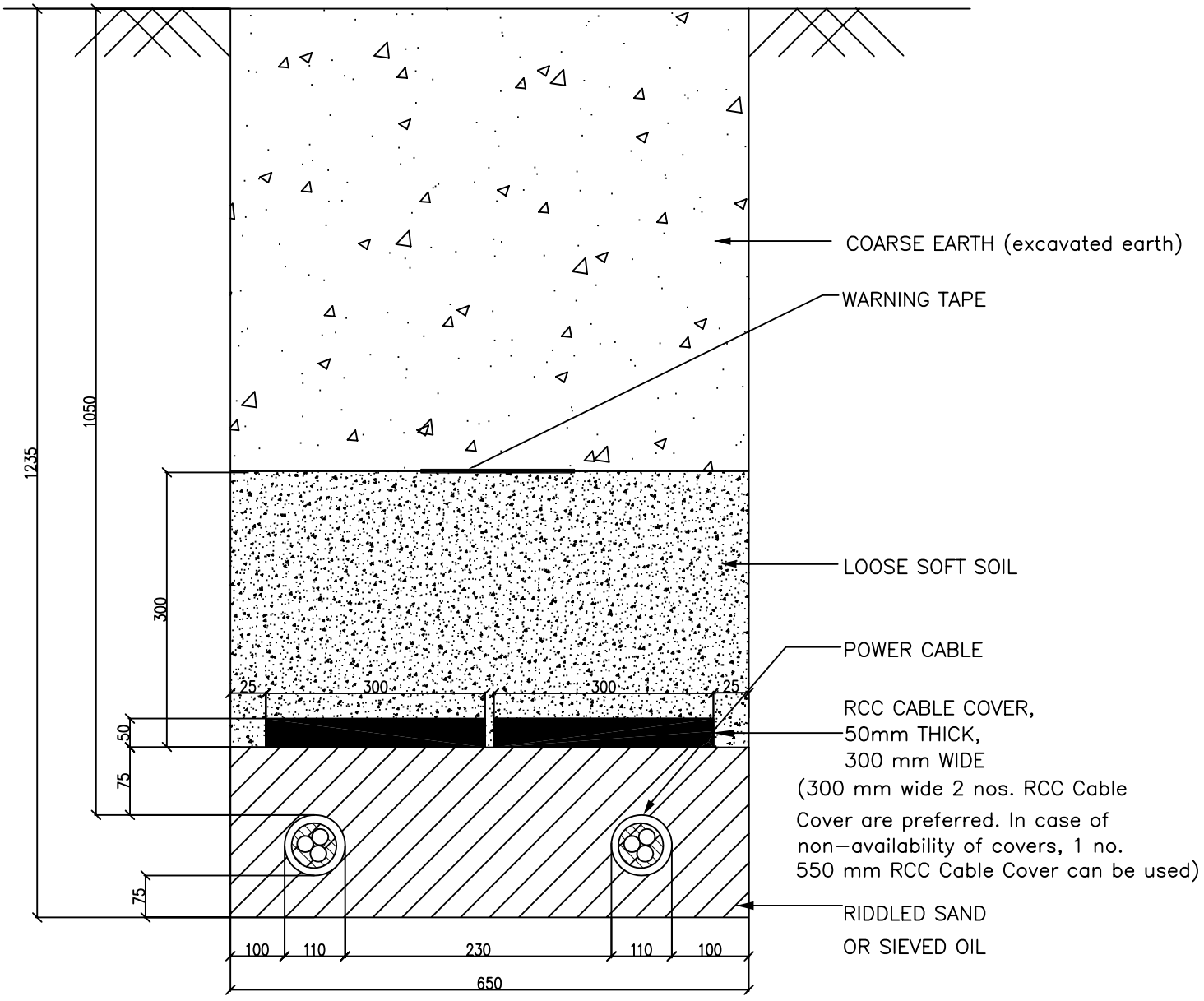

TYPICAL DETAILS FOR 33KV BURRIED CABLE FOR TWO CIRCUIT

TYPE – B–2

DRAWN	DS	TITLE:– TRENCH DRAWING FOR 3C X 400MM2, 33KV DOUBLE CIRCUIT XLPE CABLE	BSES
CHECKED	SGD		
APPD.	D.GUHA		
DATE			REV. 00
SCALE			

DRAWING # 5 A

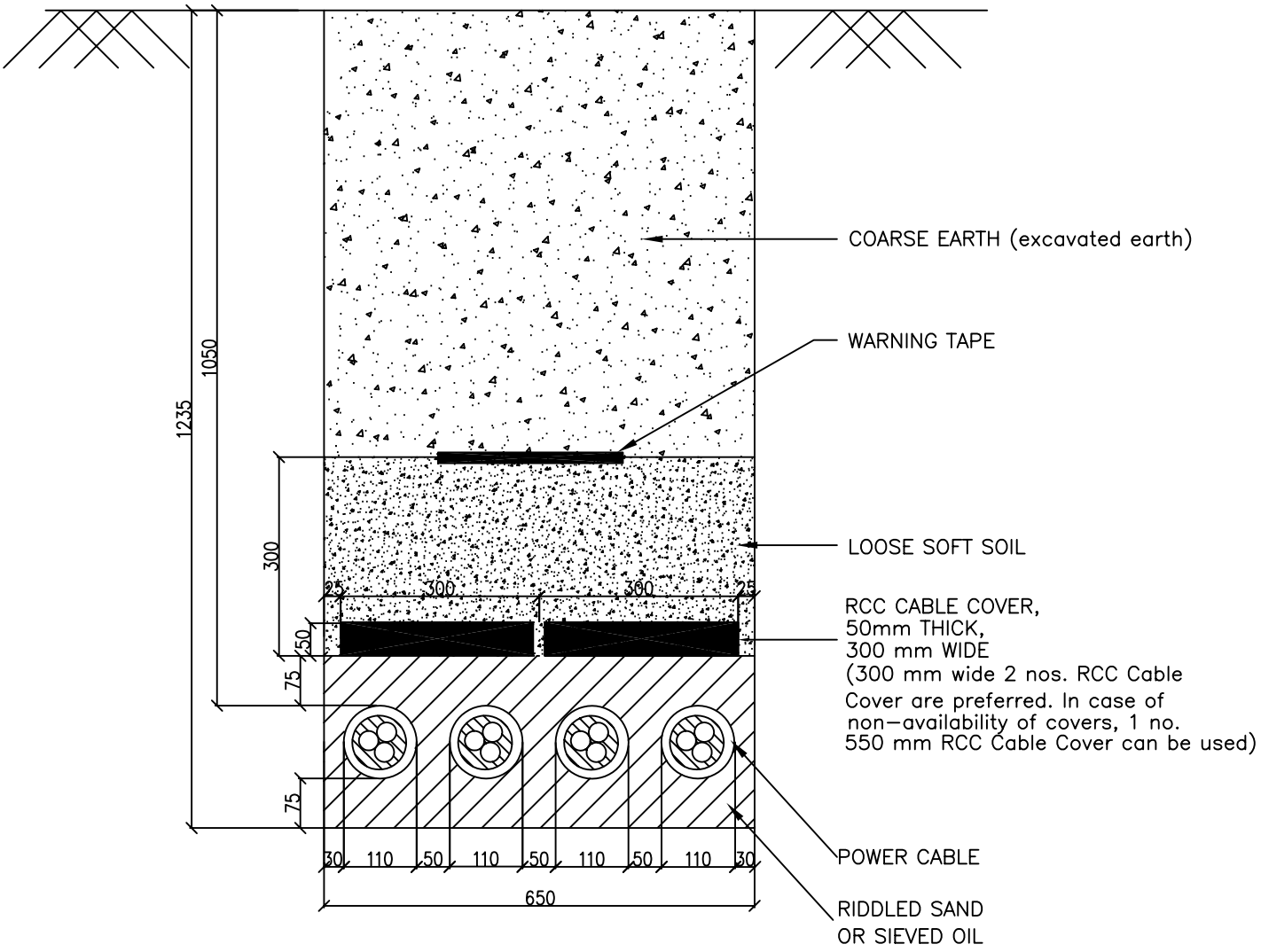

TYPICAL DETAILS FOR 33KV BURRIED CABLE FOR FOUR CIRCUIT
TYPE – B 2

DRAWN	DS	TITLE:–	BSES
CHECKED	SGD	TRENCH DRAWING FOR	
APPD.	D.GUHA	3C X 400MM2, 33KV	
DATE		FOUR CIRCUIT	REV. 00
SCALE		XLPE CABLE	

DRAWING # 5 B

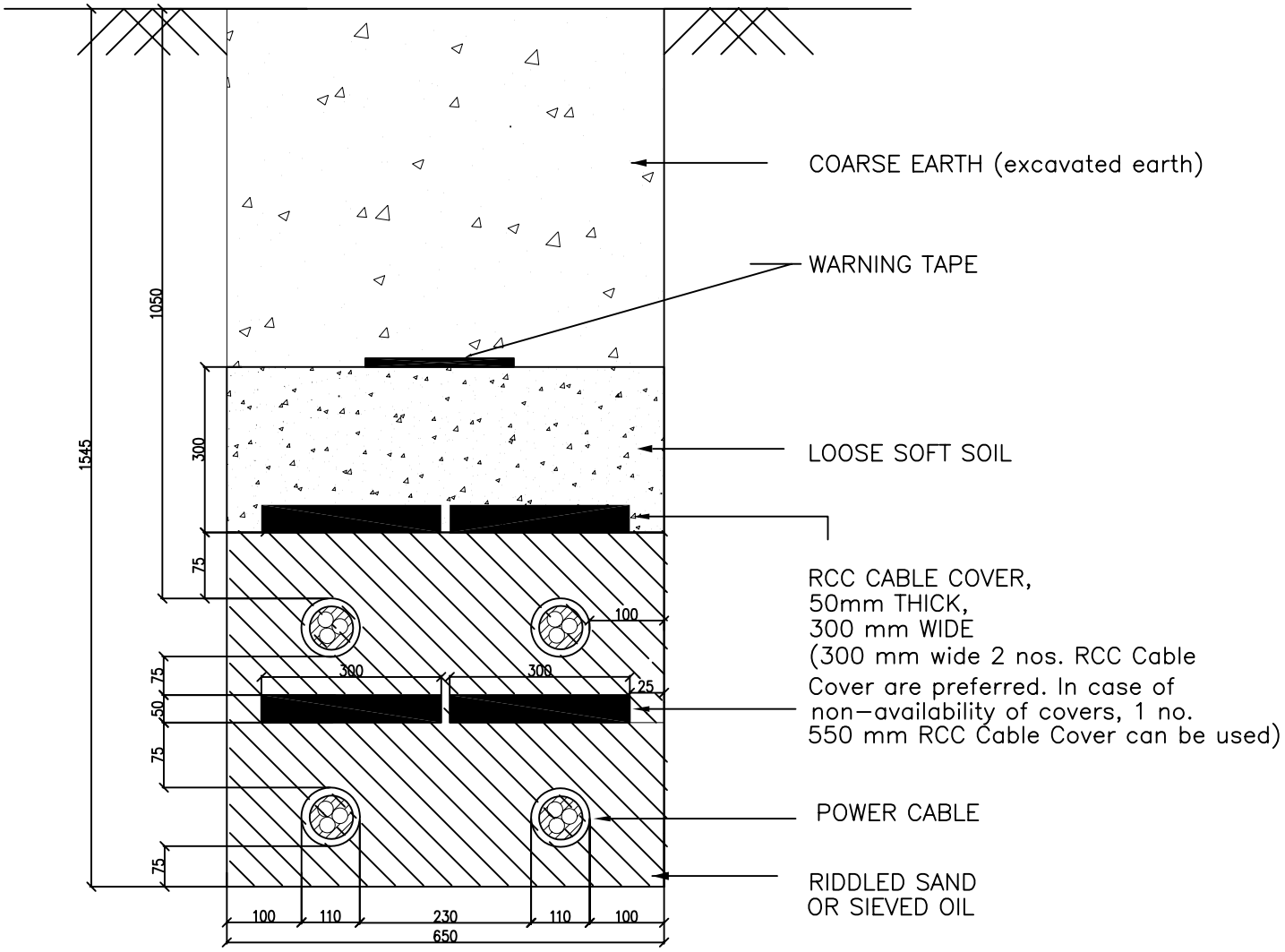

TYPICAL DETAILS FOR 33KV BURRIED CABLE FOR FOUR CIRCUIT
TYPE – B 3

DRAWN	DS	TITLE:–	BSES
CHECKED	SGD	TRENCH DRAWING FOR	
APPD.	D.GUHA	3C X 400MM2, 33KV	
DATE		FOUR CIRCUIT	REV. 00
SCALE		XLPE CABLE	

DRAWING # 5 C

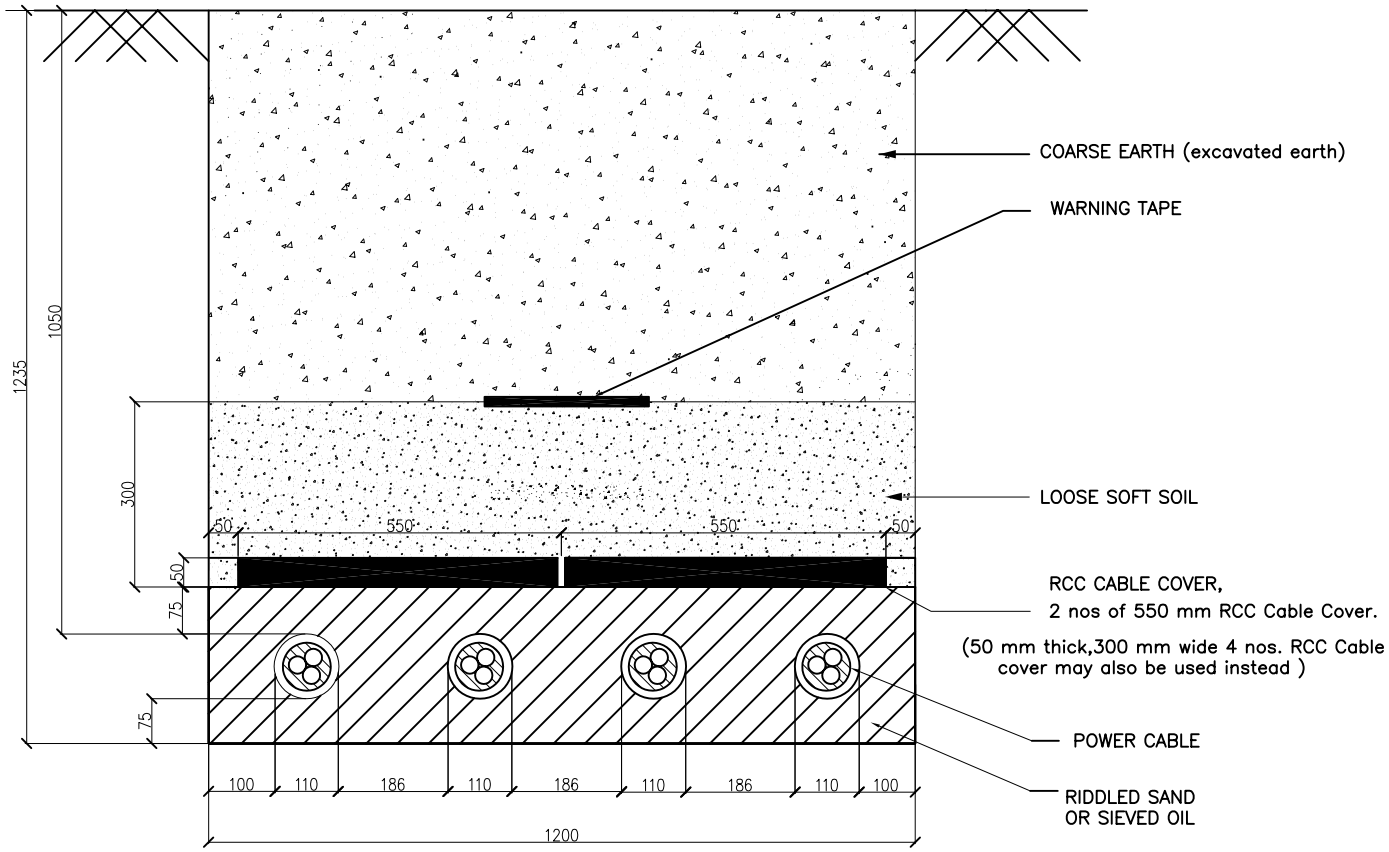

TYPICAL DETAILS FOR 33KV BURRIED CABLE FOR FOUR CIRCUIT
TYPE – C 1

DRAWN	DS	TITLE:–	BSES
CHECKED	SGD	TRENCH DRAWING FOR	
APPD.	D.GUHA	3C X 400MM2, 33KV	
DATE		FOUR CIRCUIT	REV. 00
SCALE		XLPE CABLE	

DRAWING # 6

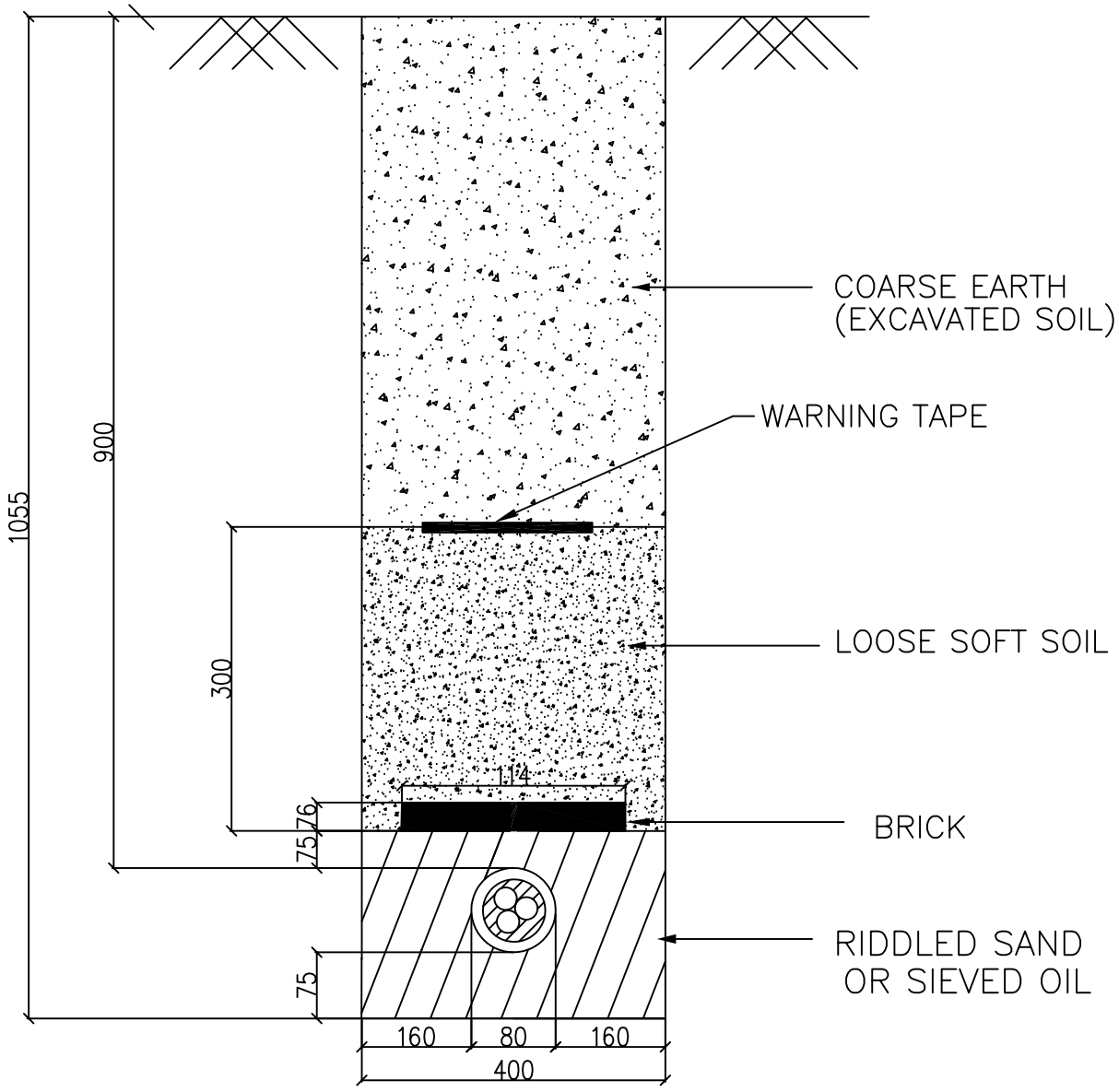

TYPICAL DETAILS FOR 11KV BURRIED CABLE FOR SINGLE CIRCUIT

TYPE – A 2

DRAWN	DS	TITLE:–	BSES
CHECKED	SGD	TRENCH DRAWING FOR	
APPD.	D.GUHA	3C X 300 Sq. mm	
DATE		11KV SINGLE CIRCUIT	REV. 00
SCALE		XLPE CABLE	

DRAWING # 7

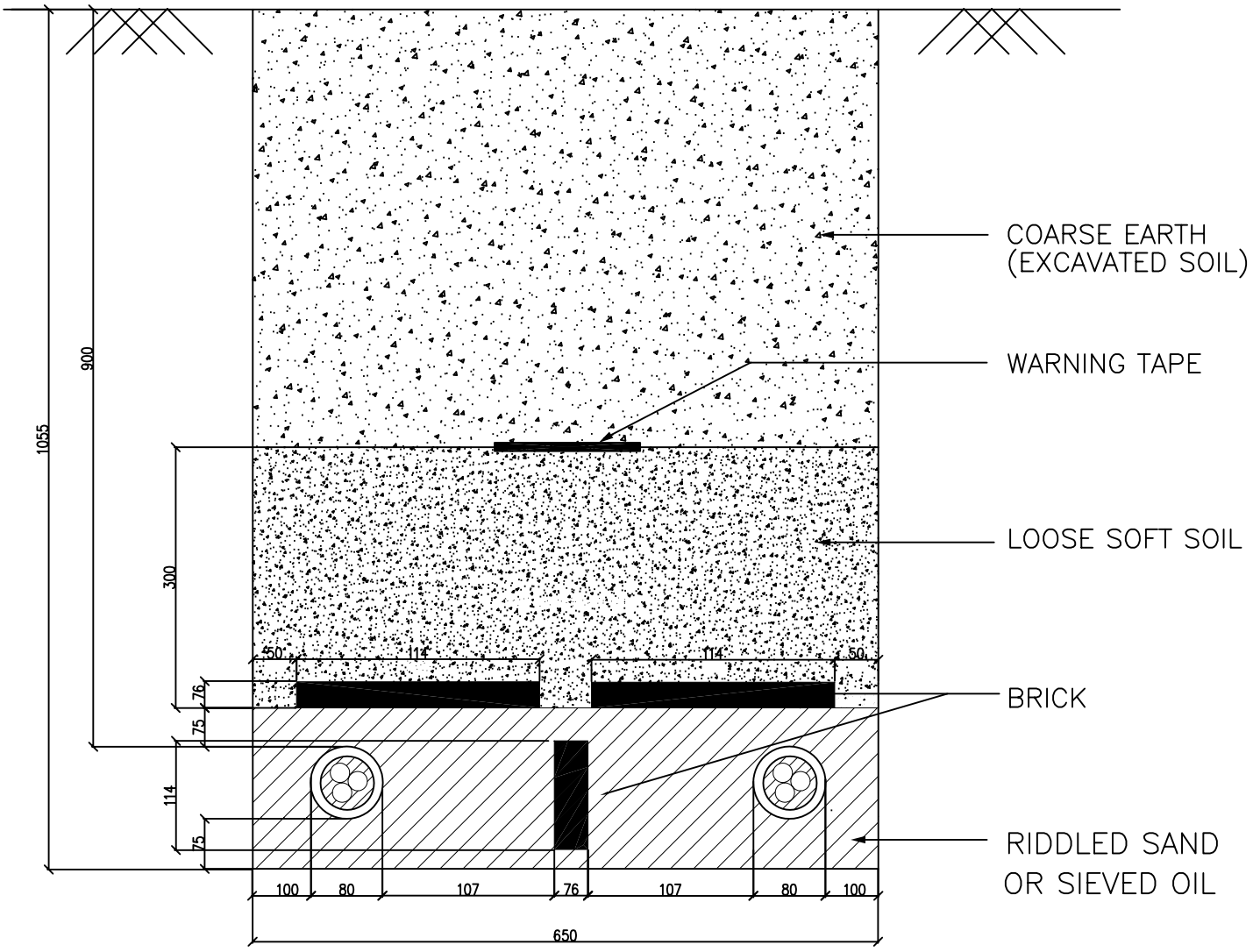

TYPICAL DETAILS FOR 11KV BURRIED CABLE FOR TWO CIRCUIT

TYPE – B 1

DRAWN	DS	TITLE:– TRENCH DRAWING FOR 3C X 300 mm Sq. or 3C X 150 mm sq II KV DOUBLE CIRCUIT XLPE CABLE	BSES
CHECKED	SGD		
APPD.	D.GUHA		
DATE			REV. 00
SCALE			

DRAWING # 8

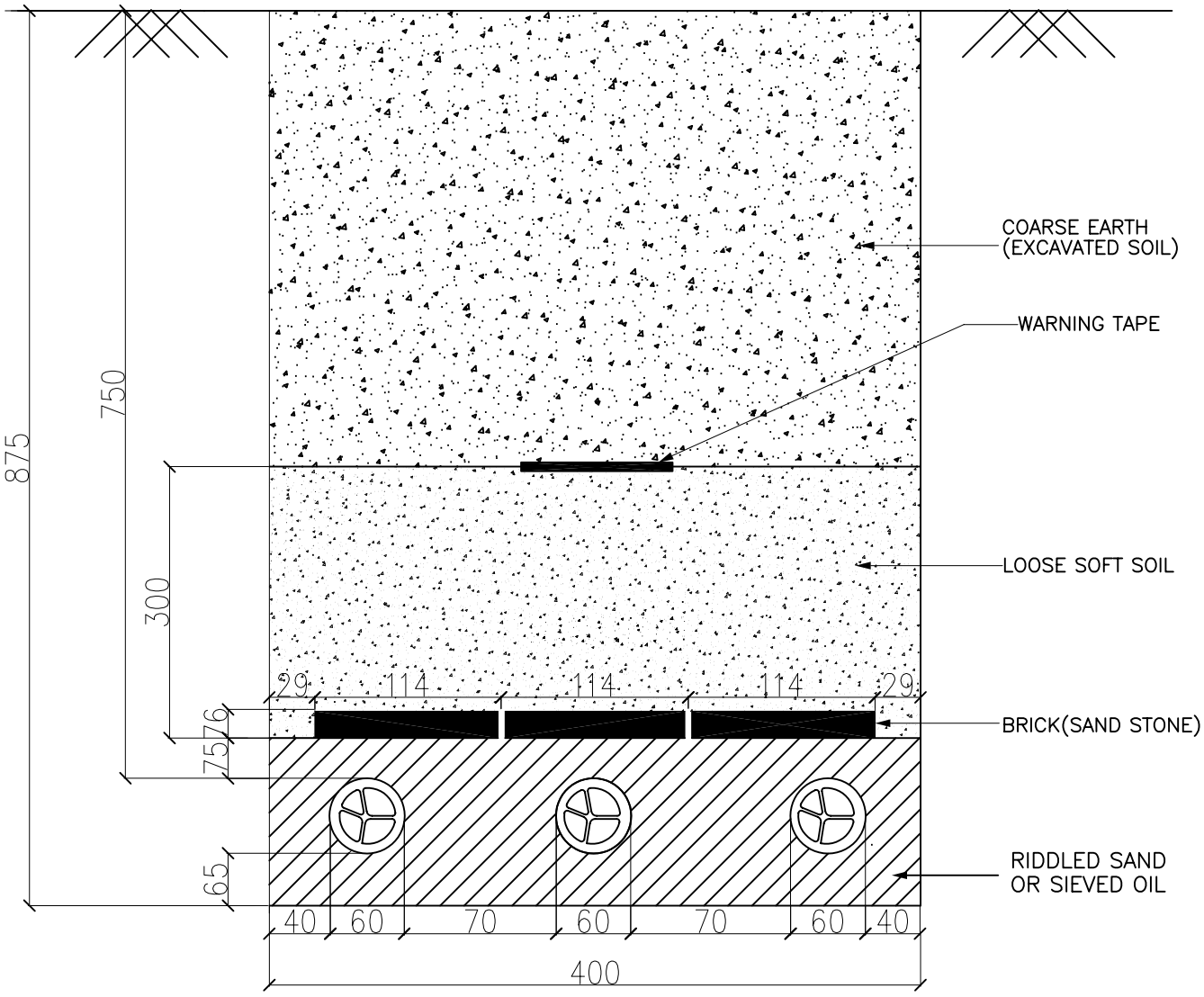

TYPICAL DETAILS FOR 1.1KV BURRIED CABLE
TYPE – A 1

DRAWN	DS	TITLE:– TRENCH DRAWING FOR 3.5Cx300Sqmm 1.1 KV XLPE CABLE	BSES
CHECKED	SGD		
APPD.	D.GUHA		
DATE			REV. 00
SCALE			

DRAWING # 9

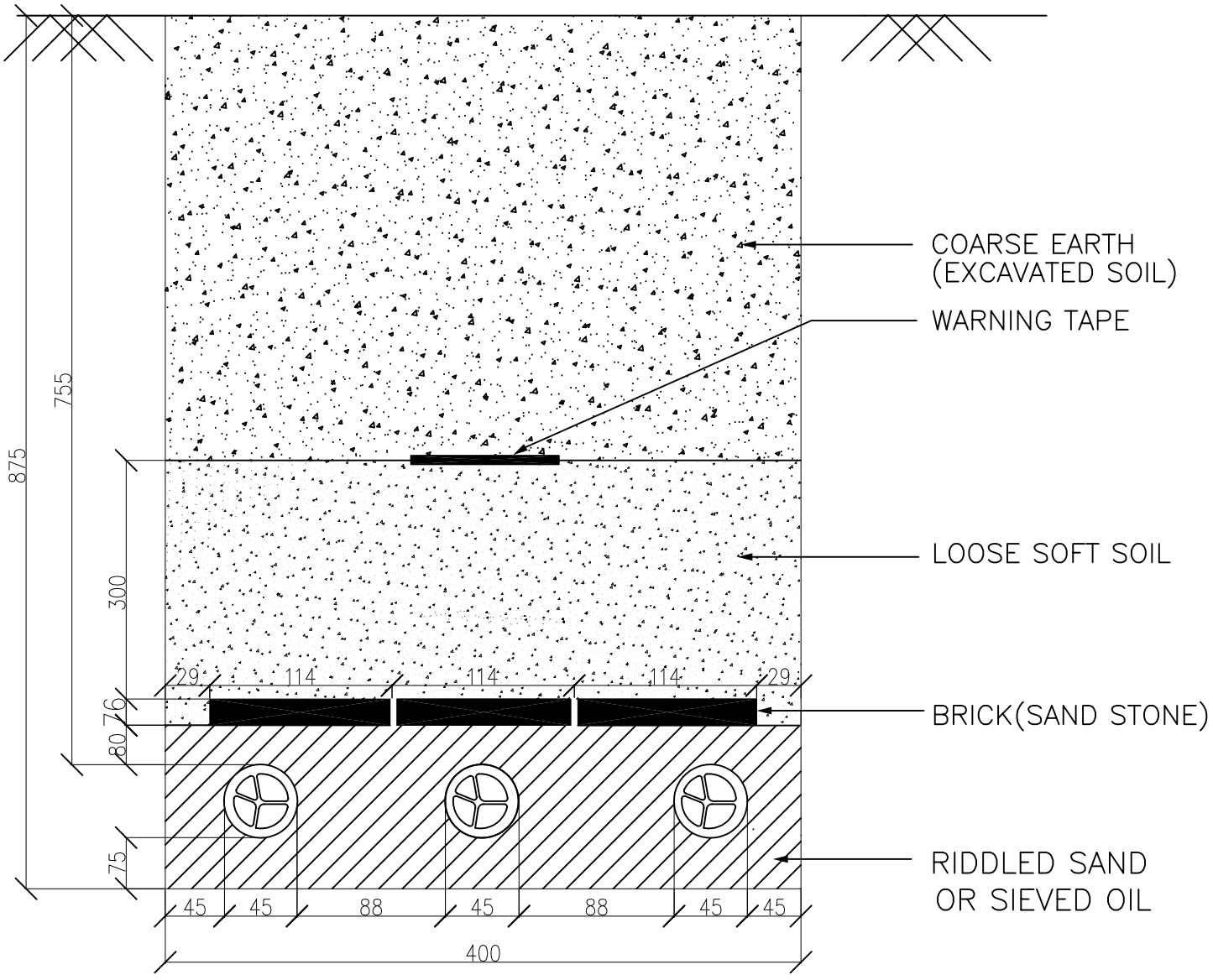

TYPICAL DETAILS FOR 1.1KV BURRIED CABLE
TYPE – A 1

DRAWN	DS	TITLE:–	BSES
CHECKED	SGD	TRENCH DRAWING FOR	
APPD.	D.GUHA	3.5Cx150Sqmm 1.1 KV	
DATE		XLPE CABLE	REV. 00
SCALE			

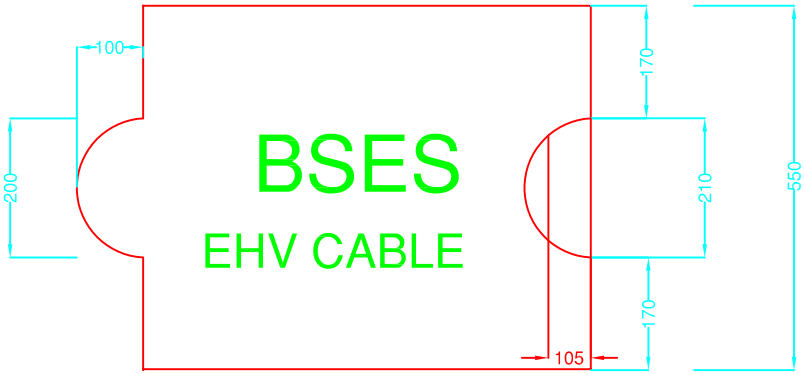

PLAN



ELEVATION

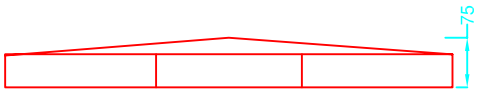

SIDE VIEW

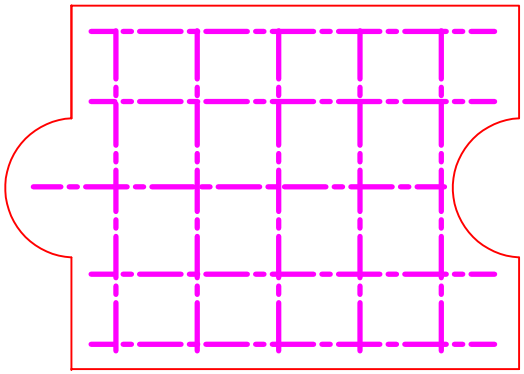

NOTE -

(i) All dimensions are in MM.

(ii) Concrete Mix 1 : 2 : 4

(iii) MS rod - 6 MM Ø

CABLE COVER FOR EHV CABLES TYPE - A.

1. STEEL ROD - AS PER IS 432/1139

2. CONCRETE MIX SHALL BE NOT LESS THAN M200 GRADE AS PER IS 456.

3. MOULDING SHALL BE WITH COMPACTION NOT LESS THAN 7 MN/Sq.m.(70 kgf/Sqcm)

DRAWN		TITLE:– CABLE COVER FOR EHV CABLE TYPE – A	BSES
CHECKED			
APPD.			
DATE			REV. 00
SCALE			



PLAN

1. STEEL ROD - AS PER IS 432/1139
2. CONCRETE MIX SHALL BE NOT LESS THAN M200 GRADE AS PER IS 456.
3. MOULDING SHALL BE WITH COMPACTION NOT LESS THAN 7 MN/Sq.m.(70 kgf/Sqcm)



ELEVATION

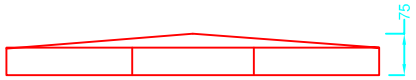

SIDE VIEW

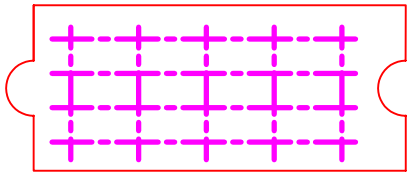

NOTE -

(i) All dimensions are in MM.

(ii) Concrete Mix 1 : 2 : 4

(iii) MS rod - 6 MM Ø

CABLE COVER FOR EHV CABLES TYPE B.

DRAWN		TITLE:– CABLE COVER FOR EHV CABLES TYPE – B	BSES
CHECKED			
APPD.			
DATE			REV. 00
SCALE			

Annexure-7: Barricading and Safety

1. Dimensions of barricading- Height- 2 mtr, Length- 1.5 mtr. Refer drawing enclosed with tech spec for more details.
2. There shall not have any gap in between two barricades. Edge to edge shall be intact.
3. LED Bacon light shall be placed at 1st and 4th barricade and same shall be continue
4. Name, painting, colour, clean ness etc. shall be done on regular basis.
5. Vendor to ensure that traffic management shall not be excuse of work execution. The contactor shall not undertake loading and unloading at carriageways obstructing the free flow of vehicular traffic and encroachment of existing roads by the contactor applying the excuse of work execution.
6. Full height fence, barriers, barricades etc. shall be erected around the site in order to prevent the working area from the risk of accidents due to speedy vehicular movement. Same the way barricades protect the road users from the danger due to construction equipment and temporary structures.
7. The structure dimensions of the barricades , material and composition, its colour scheme, BSES logo and details shall be in accordance with specification and drawing laid down in the tender documents.
8. All the barricades shall be erected as per the design requirements of employer, numbered painted and maintained in good condition and also barricade in charge maintain a barricade register at site
9. All barricades shall be conspicuously seen in the dark/night time by the road users so that no vehicle hits the barricades. Conspicuity shall be ensured by affixing retro reflective strips of required size and shape at appropriate angle at bottom and middle portion of the barricades at a minimum gap of 1000 mm. In addition minimum one red light /red blinker and red beacon light should be placed at the top of each barricade.
10. No dust deposit at the front side of barricades.
11. Cable drum shall be returnable and vendor shall take it back (by bye back process) from site at their own risk and cost.
12. Once cable lying complete of a drum, within two days empty drum shall be removed from site by bye back process.
13. Trained traffic marshal with all PPE and traffic control light (Red and Green) shall be placed at site for 24x7.
14. No excuse of theft (beyond 6 hrs. of FIR) shall be acceptable.
15. During execution of job, any damage to other agency's properties shall be counted in vendor account and necessary action shall be taken by vendor to recover, repair etc.
16. Excess earth shall be removed from site after back filling. Site to be cleared to avoid flowing of dust. Barricades to be removed from site with in 24 hrs. after completion of job.
17. During non working hrs. vendor to ensure presence of supervisor for controlling any event from locals.
18. PPEs

    - Helmets

- Mask
- Jacket
- Shoes
- First Aid Box etc.

Shall be available at site 24x7. Zero tolerance on absence of PPEs to the working personnel. No excuse shall be acceptable in this regards.

19. GPR/Scanning shall be done by vendor of whole the route and same shall be submitted to BRPL. This work shall be done by vendor before execution of job.
20. Jointing TAT- Jointing to start within 48 hrs. and shall be completed by 96 hrs.+1 day.
21. Lifting of cable drums with hydraulic machine, pulling of cable from top end of drum with pulling machine (hydraulic winch) is mandatory.
22. Violation on barricading guideline and safety norms, a fine of Rs.5000 /day shall be imposed. BRPL inspector/engineer in-charge shall be empowered to impose the above penalty.

Annexure # 8 – ROUTE MARKER AND BARRICADING DRAWING

DETAIL OF HT CABLE ROUTE MARKER (RCC) - BSES

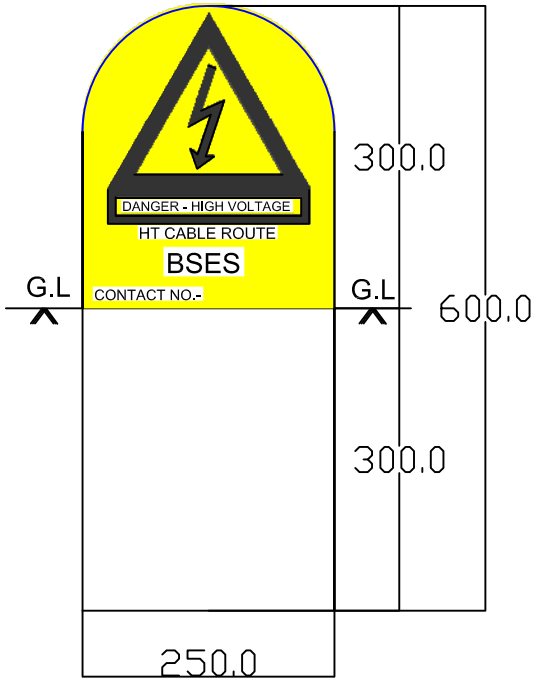

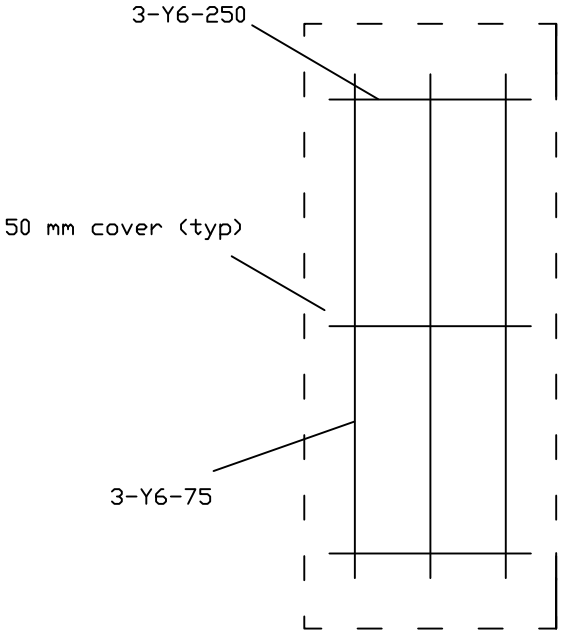

Notes:-

1	RCC Cable route marker with 6 mm Dia. Road and M25 concrete grade.
2	The litter/number shall be engraved on both the side route marker.
3	All dimentions are in mm unless specified.
4	Thickness of RCC shall be 75mm.
5	Yellow colour shall be visible above ground level.
6	Each route marker to be placed at an internal 50 mtr. and at every turn of route.
7	All kind of paint on route marker shall be in the scope of manufacturer.

DRAWN	R.K.JANA
CHECKED	P.B
REVIEWED	M.B
APPO.	K.A
DATE	16.08.16

TITLE:-

DETAIL OF HT CABLE ROUTE MAKER (RCC).

BSES Rajdhani Power Ltd.

DWG. NO.

BSES-RM-RCC-01, R0

BARRICADING FOR CABLE LAYING WORK

NOTE:

1. Barricading shall provided through out the route length as well as project location.
2. Plate shall be MS
3. Supervisour name, ph no, work in progress, shall be mentioned at every 1st and 4th plate of barricading through out the route.
4. Becon Light shall be provided through out the length.
5. Traffic marshal shall be Provided for traffic control by vendor.
6. Violation of safety norms and barricading shall be reviewed by BRPL and shall impose fine of Rs.5000/day as well as termination of work and short close of award.
7. After finishing of job vendor shall take return all the plate at their own risk and cost.
8. PPE's like Helmet, Mask, Jacket, safety boot etc. shall be provided vendor to all worker.

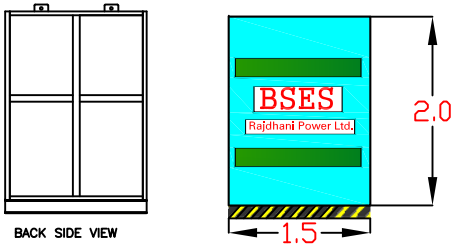

BACK SIDE VIEW

FRONT SIDE VIEW

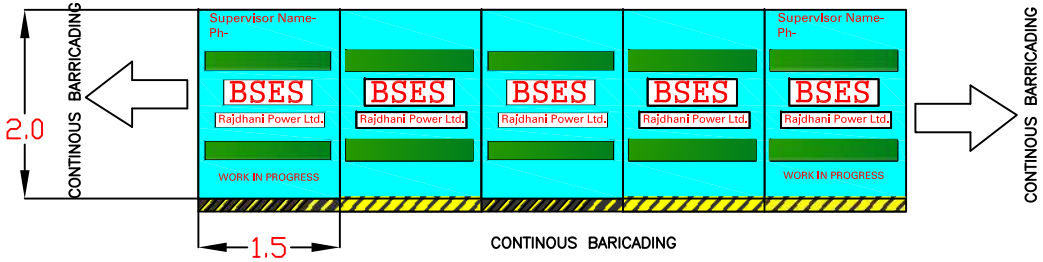

DRAWN	R.K.JANA	TITLE:– DRAWING–BARRICADING FOR CABLE LAYING WORK	BSES Rajdhani Power Limited
CHECKED	P.B.		
REVIEWED	A.S.		
APPD.	V.P.		
DATE	29.06.17		

Annexure#9-Note for HDPE Pipe Diameter in Cable Laying

1) Primarily our intent for laying cable will be through open trench only.
2) Trench dimensions shall be as per the standards which mentioned as below table

Sl. no.	Cable	Trench Details (mm)		
		Depth (single and double run)	Width (Single Run)	Width (Double Run)
1	LT Cable	875	400	400
2	11 kv	1055	400	650
3	33 kv	1235	400	650
4	66 Kv	1445	650	1200

3) QC team will do stage inspection after completion of digging to validate the depth of trench and will give approval for issuing of cable.
4) Execution in charge to ensure the cable laying work.
5) QC team will also inspection the laying work to validate the laying as per standards before back filling.
6) In case of site constraints, trench less cable laying shall be allowed as per the followings-
   a) Cable laying up to 50 mtr through trenchless will be allowed with approval of circle head (O&M) for road crossing or site constraints. Site photos of constraints shall be reviewed before approval by circle head.
   b) Absence of permission for digging- written disapproval by road owing agency and appropriate approval by circle head (for O&M Jobs), by O&M head (for 11kV, P&C job) and by EHV head (for EHV Jobs)
   c) The size of HDPE (PN6, PE80) pipe shall be as per the guidelines of IS-1255, 1983, clause no-6.3.4.3. Details mentioned below in below table-

Sl. No	Cable	Recommended Dia of HDPE pipe (mm)
1	66kV, 3CX300	225
2	66kV, 1CX630	180
3	66kV, 1CX1000	180
4	33kV, 3CX400	180
5	11kV, 3CX300	160
6	11kV, 3CX150	160

d) In-case of using lower size of HDPE pipe due to site conditions, the deviation for using lower HDPE pipe from above table, written approval must be taken through technical committee. Photos of the challenges while apparently the same will be reviewed by technical committee.

(However, HDPE pipe size with less than 1.5XOD of cable shall not be allowed at any stage)

BSES

Technical Specification

For

66kV, 3CX300 sq mm Cable

Specification no – BSES-TS-39-3C66-R0

Rev.		0
No. of Pages		30
Date		25 Apr 2022
Prepared by	Gautam Deka/ Pronab Bairagi	25/04/22
	Abhishek Vashistha	
Reviewed by	Puneet Duggal	
	Amit Tomar	25/04/22
Approved by	Gaurav Sharma	
	Gopal Nariya	

Index

Sl no	Description	Page no
1	General Specification	3
2	Annexure A: Scope, Documentation and Delivery Schedule	11
3	Annexure B: Service Conditions	12
4	Annexure C: General Technical Particulars (GTP)	13
5	Annexure D : List of BSES approved Sub-Vendors	18
6	Annexure E: General Arrangement Drawing for End-sealing Cap	20
	Annexure F: General Arrangement for Cable pulling eye	21
7	Annexure G: BSES format (typical) for Quality Assurance Plan (QAP) for EHV Cables	22
8	Annexure H: Testing and manufacturing process requirements w. r. t. TR- XLPE insulation	30
9	Annexure I: Deviation format	30

1.0 Scope

This specification covers technical requirements of design, manufacture, testing at manufacturer's works, packing, forwarding, supply and unloading at stores/site, performance of 66 kV 3Cx300 sq. mm cable complete with all accessories for trouble free and efficient operations.

2.0 Applicable Standard

The equipment covered by this specification shall unless otherwise stated, be designed, manufactured and tested in accordance with latest revisions of relevant Indian Standards /IEC and shall conform to the regulations of local statutory authorities.

Indian Standards

IS 7098 (Part-3)-1993	Specification for Cross-linked polyethylene insulated PVC sheathed Cables Part: 3 - For working voltages from 66 kV upto and including 220 kV
IS 8130-2013	Specification for Conductor for insulated electric cables & flexible Cords
IS 5831-1984	Specification for PVC insulation and sheath of electric Cables
IS : 3975 -1999	Mild steel wires, formed wires and tapes for Armouring of Cables
IS: 5216	Guide for Safety procedures and practices in electric works
IS: 10418-1982	Specification for Drums for Electric Cables

IEC Standards

IEC-60228: 2004	Conductor for insulated cables
IEC-60502 (Part-2): 2005	Power cables with extruded insulation and their accessories for rated voltages for rated voltages from 6 kV (Um = 7,2 kV) up to 30 kV (Um= 36 kV)
IEC-60811: 1990	Test methods for insulations and sheaths of electric cables and cords.
IEC 60840: 2004	Power cables with extruded insulation and their accessories. Test methods and requirements.

3.0 Cable Design Features

S.NO	DESRIPTION	REQUIREMENT
3.1	Manufacturing process	The cable shall be manufactured by "Triple head extrusion process". The conductor screen, Insulation & Insulation screen shall all be extruded in tandem to ensure homogeneity and reduction of voids, in the insulation and the screening system of the cable, whereby enhancing the life of the cable. The cable shall be strictly manufactured by "**Dry Cured and Dry-Cooled**" process.
3.2	Conductor	Electrolytic grade Aluminum conductor shall H2 grade, class-2 in accordance with IS 8130/IEC 228. The shape of conductor shall

		be compacted, stranded, and circular.
3.3	Longitudinal water sealing of conductor	Shall be achieved by water swelling yarns/tapes in the interstices of the conductor. The fiber/yarn shall turn into jelly/swell, when in contact with water making the conductor water tight as per IEC 60502-2.
3.4	Semi conducting water blocking tape	Semi-conducting water blocking tapes shall be applied over the conductor, suitable for continuous operating conductor temperature of 90 deg C.
3.5	Conductor Screen	The conductor screen shall consist of extruded semi conducting compound which shall be fully compatible with the conductor and extruded insulation. Outer surface of semiconductor screen shall be super smooth, and firmly bonded to the overlaying insulation. The minimum Thickness of conductor screen shall be 0.8 mm
3.6	Insulation	The extruded XLPE insulation shall TREE-RETARDANT and of very high degree of purity with nominal thickness of 11 mm. The minimum thickness at any point shall not be less or more than 10% of the nominal value. Percentage eccentricity of the insulation shall not be more than 10%. The insulation properties shall be stable under Thermal conditions arising out of continuous operation at conductor temperature of 90 deg C rising momentarily to 250 Deg C under short circuit conditions.
3.7	Insulation Screen	The insulation screen shall consist of extruded semi conducting Compound which shall be fully compatible with extruded insulation. Insulation screen shall be firmly bonded to the insulation The minimum Thickness of insulation screen shall be 0.8 mm
3.8	Make of insulation and semi conducting screen	TR-XLPE of Dow/Borealis/Hanwa (any deviation to above shall not be acceptable unless and until it has been specially approved by BSES prior to sourcing of compounds and manufacturing of cable).
3.9	Core	The ovality of the core shall not be more than 5%.
3.10	Inner Longitudinal water sealing bedding	Semi-conducting water swellable tapes shall be applied over the extruded semi-conducting core screening. Nominal Thickness of the Swellable Tape = 0.3 mm The swell speed shall be greater 12mm/minute
3.11	Metallic Screen	The metallic Screen shall consist of a layer of annealed copper tape of minimum 0.1mm thickness and shall be applied over the semi-conducting water-swellable tape with minimum 10% overlap.

3.12	Inner Longitudinal water sealing bedding (2nd layer)	Semi-conducting water swellable tapes shall be applied over the metallic screen again with a minimum overlap of 10 %. Nominal Thickness of the Swellable Tape = 0.3 mm The swell speed shall be greater 12mm/minute
3.13	Core Identification	Cores shall be identified by coloured strips (Red, Yellow, Blue), applied helically / longitudinally over the copper tape. The coloured strips shall carry the name of manufacturer permanently printed at close intervals; this is to provide additional identification of manufacturer of the cable.
3.14	Optical Fiber Cable (as one of the fillers)	Clause deleted
3.15	Fillers	Fillers used in 3-Core cables shall be of PP Fillers grade along with sufficient water blocking yarn to make it water tight construction.
3.16	Laying up of Cores	All the 3-Core, along with Fillers, water-blocking yarn shall be laid in the suitable right hand lay.
3.17	Inner Sheath	Extruded PE ST7 confirming to requirements of IEC 60502-2 with latest amendments. The minimum thickness of the inner sheath shall be 1.5 mm. A non-conducting water blocking tape with approx. 10% overlap shall be applied over the inner sheath.
3.18	Armour	The armour shall be of galvanized round steel wires of minimum 4 mm dia complying the requirements of IS 3975:1999 with latest

		amendments. The armour wires shall be applied with minimum 90% coverage. The joints in the armour round wires shall be made by brazing or welding and the surface irregularities shall be removed. A joint in the wire shall be at least 300 mm from the nearest joint in any other armour wire in the completed cable. The short circuit capacity of armour shall be 26.3 kA for 3 second.
3.19	Binder Tape	Rubberized cotton tape shall be wrapped with approx. 10% overlap over armour
3.20	Outer Sheath	The outer sheath shall consist of extruded black colored HDPE type ST 7 as per IEC 60502-2 with anti termite protection. The minimum thickness shall be 3 mm at any point. Semi conductive layer either extruded or graphite coating shall be provided over the Outer Sheath.
3.21	Cable Rating	The cable size shall be suitable to carry rated load current on 66 kV continuously without exceeding the maximum conductor temperature of 90 deg. C.
3.22	Drum Length	300m ± 5 % (short lengths not acceptable except the last length and minimum acceptable short length shall be 100m). The Overall tolerance - 2 % for the total cable length of the entire order Manufacturer shall not be allowed to put two cable pieces of different short length in same cable drum.
3.23	Embossing	The extruded outer sheath shall be embossed with meter marking at interval of 1 metre. The ”A” end meter marking and “Z” end meter marking and the drum lengths shall be printed on the drum flange along with other markings. The outer sheath shall also be embossed with (min.) a) Voltage designation b) Type of construction/cable code (i.e. A2XCEW2Y) c) Number of core and nominal cross sectional area. d) Type of cable “Electric Cable”. e) Manufacturers name & trade mark f) Name of buyer (e.g. BSES) g) Month & year of manufacturing h) Batch no / Lot no. and Drum no i) Sequential length marking. j) Purchase Order Number and Date Progressive length marking shall start from zero for each drum.
3.24	Joints and Terminations	The 3-Core Joints and Terminations to be used with the cable shall be with proven design and fully type tested as per IS 60840. The Joints and Terminations match or exceed all technical performance parameters of the specified cable.

		The Joints and Terminations would be either Heat Shrink, Cold-Shrink or Pre-moulded type.

4.0 Quality Assurance

4.1	Vendor quality plan	To be submitted for purchaser approval
4.2	Inspection points	To be mutually identified & agreed in quality plan

5.0 Inspection & testing

5.1	Routine test	Each drum length of cable shall be subjected to the following tests
		- Measurement of the electrical resistance of the conductor shall be carried out as per the provisions of Clause 10.5 of IEC 60840/ IS 10810 part 5 The measurement shall be made on the conductors of each cable length. The D.C. resistance of the conductor at 20 deg. C shall not exceed the maximum value specified in IEC 60228 / IS 8130.
		- High voltage test as per clause 9.3 of IEC-60840/ 20.17 of IS 7098(Part-3):1993
		- Partial discharge test shall be carried out as per clause 9.2 of IEC Publication No.60840/20.10 of IS 7098(Part-3):1993
		- Measurement of capacitance as per clause 10.10 of IEC60840/ 20.18 of IS 7098(Part-3):1993
		Impulse voltage test of one drum and Physical dimension of each and every layer along with component.
		- Test on the outer jacket as per Clause 3 of IEC 60229
5.2	Type test	The cable and the associated accessories like Joints and Terminations of same voltage, design and number of cores shall be of Type Tested from CPRI/ERDA as per IEC 60840:2004 /IS7098-III:1993 with latest amendments . Type test report (from CPRI/ERDA only) of not more than five (5) years old shall be submitted for the same type, size and voltage rating of the cable offered, along with the bid.
		All type tests shall be carried out in accordance with Clause 12 of IEC-60840 / Clause 19.1 of IS 7098-III and in accordance with the sequence prescribed therein.
5.3	Short Circuit Test of Armour	The bidder shall furnish short circuit test report of 26.3 kA for 3 seconds from CPRI/ERDA for the same voltage, size and design

		of cable. This short circuit test shall be preceded and succeeded by high voltage, Partial Discharge, Armour Resistance and Conductor Resistance Test. Test report shall not be more than five (5) years old.
5.3	Acceptance Tests	Shall be conducted as per IEC: 60840: 2004 / IS: 7098-III: 1993 and approved QA plan for each lot of cable.
5.4	Special Tests	The following tests shall be carried out as special tests
		Conductor examination as per Clause 10.4 of IEC-60840 for conformance of IEC 60228/IS 8130.
		Measurement of thickness of insulation as per Clause 10.6 of IEC- 60840 and Clause 8 of IEC-60811-1-1./ IS 10810 part 6
		Measurement of thickness and overall dimensions of sheath as per Clause 8 of IEC-60811-1-1./ IS 10810 part 6
		Measurement of dimensions of Armour as per Clause 10.7 of IEC-60840/IS 10810 part 36
		Measurement of external diameter as per Clause 8.3 of IEC-60811-1-1
		Hot set test for TR-XLPE insulation as per Clause 10.9 of IEC-60840/ IS 10810 Part 30
		Degree of cross-linking as per ASTM D 2768-01, void and contamination as per 20.1 of IS 7098 (Part-3), abrasion resistance as per BS 7835
		Sheath Integrity Test
5.5	Inspection	The buyer reserves the right to witness all tests specified on completed cables
		The buyer reserves the right to inspect cables at the Seller's works at any time prior dispatch, to verify compliance with the specifications.
		In-process and final inspection call intimation shall be given in advance to purchaser.
		In the event of any discrepancy in the test reports i.e test reports not acceptable or any type tests(including special / assitional tests,if any) not carried out , same shall be carried out without any cost implication to BSES before dispatch of cable.
5.6	Test certificates	Three sets of complete test certificates shall be submitted along with the dispatch documents.

6.0 Drawings, Data & manuals

6.1	To be submitted along with bid	The seller has to submit:
		a) Cross sectional drawing of cable.
		b) Completely filled GTP
		c) Type test certificates
		d) Dimensional drawing for pulling eye
		e) Fault level calculation
		f) Complete cable catalogue and manual
		g) Armour Coverage Calculations
		f) Short Circuit Test Certificate
6.2		Within 15 days, the seller has to submit four sets of above mentioned drawings along with one soft copy for buyer's approval.
6.3	Submittals required prior to dispatch	a) Inspection and test reports, carried out in manufacturer's works (R)
		b) Test certificates of all bought out items.
6.4	Drawing and document sizes	Standard size paper A0, A1, A2, A3, A4
6.5	No. of drwgs. / Documents required at different stages	As per Annexure – A

7.0 Shipping, Handling and Site support

7.1	Packing	The cable shall be wound on non-returnable steel drums of suitable size of minimum hub diameter of 15D (where D is the overall diameter of the cable) and packed conforming to international standards. The drum shall be fully enclosed by suitable packing preferably PP sheeting. Cable shall have sea worthy packing in case cables are dispatched by shipping lines.
7.2	Pulling eye & sealing of Cable ends	A cable pulling eye shall be provided at "Z" end of cable on each drum. Suitable fillings/putty shall be used for sealing gap between outer sheath and pulling eye. Heat shrinkable sleeves with the pulling eye shall also be provided. The pulling eye shall be directly connected to the conductor and be capable to withstand a tensile load of 30N / sq mm of conductor area. The "A" end of the cable shall be sealed with heat shrinkable cap. Drawing of the pulling eye shall be submitted along with the bid for review.
7.3	Drum identification label	The following information shall be marked on the drum:
		- Drum identification number.
		- Trade name or trade mark; if any
		- Name of manufacturer and buyer
		- Nominal sectional area of the conductor of the cable
		- Type of cable and voltage for which it is suitable

		- Length of the cable on the drum, with “A” end and “Z” end markings.
		- Purchase order number with SAP item code.
		- Year and month of manufacturing.
		- Direction of rotation of drum (an arrow) and
		- Net weight of cable in drum and gross weight of cable with drum.
		- Batch no or Lot no.
7.4	Shipping	The seller shall give complete shipping information concerning the gross weight, size of each packing.
7.5	Handling & Storage	Manufacturer instruction shall be followed. Detail handling & storage instruction sheet / manual needs to be furnished before commencement of supply.
7.6	Transit damage	The seller shall be responsible for any transit damage due to improper packing.

8.0 Progress reporting

8.1	Outline Document	To be submitted for purchaser approval for outline of production, inspection, testing, packing, dispatch, documentation programmer.
8.2	Detailed Progress report	To be submitted to Purchaser once a month containing a) Progress on material procurement. b) Progress on internal stage inspection c) Reason for any delay in total program d) Details of test failures if any in manufacturing stages e) Progress on final box up. f) Constraints / forward path

9.0 Deviations

9.0	Deviation from the Specification.	Deviations from this Specification shall be stated in writing with the tender by reference to the Specification clause/GTP/Drawing and a description of the alternative offer. In absence of such a statement, it will be assumed by the Buyer that the Seller complies fully with this specification.

<u>Type Test Required After Award of PO:</u>

Type test on one cable drum of each type/rating from any lot shall be conducted at CPRI/ERDA on sample basis as per relevant IS/IEC. Sample shall be sealed by BSES during inspection of cable. This type test is applicable subject to BSES requirement and cost shall be borne by BSES

Annexure – A

Scope, Documentation and Delivery schedule

Document/Drawing submission shall be as per the matrix given below:

a. All documents/drawings shall be provided in soft copy only in returnable Pen drives
b. Language of the documents shall be English only.
c. Incomplete submission shall be liable for rejection.
d. Document check sheet compliance shall be the first sheet for each submission stage i.e. Technical bid, Drawing Approval, Pre Dispatch, Pre closure
e. No submission is acceptable without check list compliance.
f. Deficient/ improper document/ drawing submission shall be liable for rejection.
g. Order of documents shall be strictly as per the check list.
h. Any document not included in the below table but necessary for detailed engineering shall be deemed to be included in bidder's scope

S.No.	Detail of Document	For Tender	For Approval/Review	Final Submission
1	Guaranteed Technical Particulars (GTP)	Required	Required	Required
2	Deviation Sheet, if any	Required	Required	Required
3	Detailed cross sectional drawing of cable and drum	Required	Required	Required
4	Installation Instructions		Required	Required
5	Manual/Catalogue	Required	Required	Required
6	Cable de-rating factors		Required	Required
7	Type test reports of offered type and rating of cable	Required	Required	Required
8	BIS certificate	Required		
9	Make of Raw Materials	Required	Required	Required
10	Inspection and test reports, carried out in manufacturer's works			Required
11	Routine Test Certificates			Required
12	Test certificates of all the raw materials			Required

Annexure – B: Service Conditions

1.0.0	Delhi Atmospheric conditions	
a)	Average grade atmosphere :	Heavily polluted, dry
b)	Maximum altitude above sea Level	1000 M
c)	Ambient Air temperature	Highest 50 deg C, Average 40 deg C
d)	Minimum ambient air Temperature	Deg C
e)	Relative Humidity	90 % Max
f)	Thermal Resistivity of Soil	150 Deg.C cm/W
g)	Seismic Zone	4
h)	Rainfall	750 mm concentrated in four months

Annexure – C: Guaranteed Technical Particulars (Data by Supplier)

Sr.	Description	Unit	Data specified by the purchaser	Data to be filled by the manufacturer
1	Name of manufacturer			
2	Country of manufacturer			
3	Type of cable			
4	Standard according to which cable is manufactured			
5	Rated voltage	kV	38/66	
6	Highest system voltage	kV	72.5	
7	System frequency	Hz	50	
8	No of phases per circuit	Nos	3	
9	System earthing		Solidly Grounded	
10	Rated short time current of Conductor	kA		
11	Rated short time current of Armour	kA	26.3 for 3 sec	
12	Rated short time current of metal screen	kA		
13	Rated short time current of armour and screen	kA		
14	Duration of short circuit current	Sec	1	
15	Impulse withstand voltage 1.2/50 micro sec wave	kVp	325	
16	Power frequency withstand Voltage	kV(rms)	95 for 30 minutes	
17	Conductor			
a	Nominal cross sectional area	sqmm	300	
b	Type class of conductor.		Compacted Stranded Circular	
C	Material of conductor		Aluminum	
D	Flexibility class of conductor		Class -2	
E	Minimum numbers of strands	Nos		
F	Diameter of strands before compaction. (nominal / Minimum)	Mm / mm		
G	Material of longitudinal water sealing filling of conductor			
18	Details of semi conducting tape over the conductor			
19	Conductor Screen			
a	Material and type			
b	Minimum thickness	mm	0.8	
	Make and grade of semi conducting compound.			
20	Insulation			

	Material of Insulation		TR-XLPE	
	Nominal thickness	Mm	11	
	Minimum thickness		9.9	
	Make and grade of insulation Compound			
	Maximum dielectric stress at the conductor surface	kV/mm		
21	Insulation screen			
a	Material and type			
b	Minimum thickness	mm	0.8	
c	Make and grade of semi conducting compound.			
22	Inner water swellable semi conducting tape			
a	Nominal thickness	mm	0.3	
b	Minimum swell height in one minute.	mm	12 mm in one Minute	
c	Overlap	%	10 min	
23	Min thickness of copper tape	mm	0.1	
a	width of copper tape	mm		
b	Overlap of copper tape	%	10 min	
24	outer water swellable semiconducting tape			
a	Nominal thickness	mm	0.3	
b	Minimum swell height in one minute.	mm	12 mm in one Minute	
c	Overlap	%	10 min	
25	Nominal diameter over Laying up	mm		
26 a	Removed	Yes/No No. No.		
26 b	No. & Material of balance fillers	No./material	/ PE ST 7	
27	No. of water blocking yarns and denier	No./material		
28	Material of the inner sheath		PE ST 7	
29	Method of Extrusion	mm	Sleeve/Tube	
30	Minimum thickness of inner sheath	mm	1.5	
31	Nominal diameter over inner Sheath	mm		
32	Non conducting water blocking tape over inner sheath			

a	Nominal thickness	mm	0.3	
b	Overlap	%	10 min	
33	Armour			
	Nominal Diameter	mm	4	
	No. of wires			
	Armour coverage			
	Area of Armour			
	Short circuit capacity of Armour	kA/3 sec	26.3	
	Binder tape over Armour		RC tape	
34	Outer jacket			
	Material and type		HDPE type ST 7	
	Minimum thickness	mm	3	
	Colour		Black	
35	Semiconducting coating outer jacket	Extruded/Graphite coating		
36	AC test voltage at works for insulation.	kV(rms)	95	
37	DC test voltage for outer jacket	kV(DC)	25	
38	Overall dia of completed single core cable	mm		
39	Weight per metre of complete Cable	kg/m		
40	Short circuit capacities with maximum conductor temperature of 250Deg C : (conductor temperature of 90 Deg C at the commencement of short circuit) 0.5 second duration 1 second duration 2 second duration 3 second duration	kA		
41	Minimum radius of bend round: which cable can be laid a) Direct burial in ground b) In ducts	mm		
42	Maximum D.C .resistance of: conductor per KM at 20 deg. C	Ohm/km	0.100	
43	Maximum AC resistance of: conductor per KM at 90 deg. C	Ohm		
44	Equivalent star reactance per KM: of 3 phase circuit at 50 Hz	Ohm		
	Maximum electrostatic capacitance : Per KM of cable	pf		
45	Maximum continuous current carrying :	Amp		

	Capacity per circuit when laid in ground as per the following parameters -Maximum continuous conductor temperature of 90Deg C -Maximum conductor temperature during short circuit of 250 Deg C -Ground temperature of 30 Deg C -Soil resistivity of 150 DegCcm/ Watt -Depth of laying of 150cm			
46	Maximum continuous current carrying : Capacity per cable when laid in air with ambient temperature of 40DegC and other parameters as per Sl no 49	Amp		
47	Rating factors for ambient air temperature attached(Yes/No)			
48	Rating factors for ground temperature attached(Yes/No)			
49	Rating factors for phase spacing in flat formation attached(Yes/No)			
50	Rating factors for grouping of cable laid in ground in horizontal formation attached(Yes/No)			
51	Rating factors for grouping of cable laid in ground in tri-foil touching formation attached(Yes/No)			
52	Rating factors for thermal resistivity of soil attached(Yes/No)			
53	Rating factors for depth of laying attached(Yes/No)			
54	Max. power factor of charging KVA of : cable when laid direct in the ground at normal voltage frequency at conductor temperature at 90Deg .C			
55	Max. dielectric power loss of cable per :	Watt/km		

	KM of 3 phase circuit laid direct in ground at normal voltage, frequency and maximum conductor temperature of 90 Deg C			
56	Impedance per KM of 3 phase circuit : at 50 C/s and maximum conductor temperature. a) Positive and negative sequence b) Zero sequence	Ohm		
57	Standard drum length of cable	Metres	300 +/- 5% (short lengths not acceptable except the last length	
58	The overall quantity tolerance	-2 %		
59	Cable to be wound on non returnable steel drum.	Yes / no	Yes	
60	Normal delivery length	Metres		
61	Cable pulling Eye to be provided at “Z” end			
62	Tensile load withstand capacity for pulling eye		30 N / sqmm	
63	Approximate shipping weight for the normal deliver length with the drum size (flange dia. in mm and width in mm):	kg		
64	Drum size (Flange dia X flange width X hub dia)			
65	Embossing details on outer jacket			
66	Sequential marking at every meter.		Provided	
67	Process of cross linking of polyethylene.			
68	Removed			

Annexure - D

List of Sub-Vendors

Ser. No.	Raw Materials		Name of the Suppliers
1.	XLPE Compound	1	Dow Chemicals , U.S.A.
		2	Borealis , Sweden
		3	Hanwha , South Korea
2.	Semi-Conducting Compound	1	Dow Chemicals, U.S.A.
		2	Borealis , Sweden
		3	Hanwha , South Korea
3.	Conductor Water-Blocking tapes / yarn / powder	1	Lantor
		2	Geca
		3	Miracle
		4	Scapa
		5	Sneham International
4.	Water-Swellable Tapes (Pre-slitted)	1	Lantor
		2	Geca
		3	Miracle
		4	Scapa
		5	Sneham International
5.	Aluminium Rod	1	Bharat Aluminium Co. Ltd. (BALCO)
		2	Hindustan Aluminium Co. Ltd. (HINDALCO)
		3	National Aluminium Co. Ltd. (NALCO)
		4	Vedanta (Sesa Sterlite)
6.	Copper Tape	1	Aggarwal Metal
		2	Indian Smelting
		3	Luvata Swedan

		4	Outokumpu Copper Strip AB, Swedan
7	Galvanized Steel Wires / Strips	1	Tata
		2	Balaji
		3	Systematic
		4	Mica Wires Pvt Ltd.
		5	Bansal Industries
8	PVC Compound	1	Kalpana
		2	Universal
		3	SCJ Plastic
		4	Sriram Polytech
		5	Shri Ram Vinyl, Kota
9	P. P. Fillers	1	Vijoy Polymers
		2	Yash Polymers
		3	AVSL Industries
10	Core Identification Tape	1	AVSL Industries
		2	Yash Polymer
		3	Vijoy Polymers
11	PE Compound	1	Borealis
		2	Shakun
		3	Kalpana

DIMENSIONS

SIZE	A EXP.(Min.)	A REC.(Max)	B EXP.(Min.)	C EXP.(Min.)	D EXP.(Min.)	LC %	T (WALL REC. ± 20 %)
EC 120/150	75	34	120	105	50	± 10	4.2
EC 240/300	100	62	130	110	70	± 10	3.5
EC 400	145	75	155	120	70	± 10	4.6

EXP - Expanded (as supplied), REC - Recovered freely, LC - Longitudinal Change,T - Wall Thickness, EC - End Cap

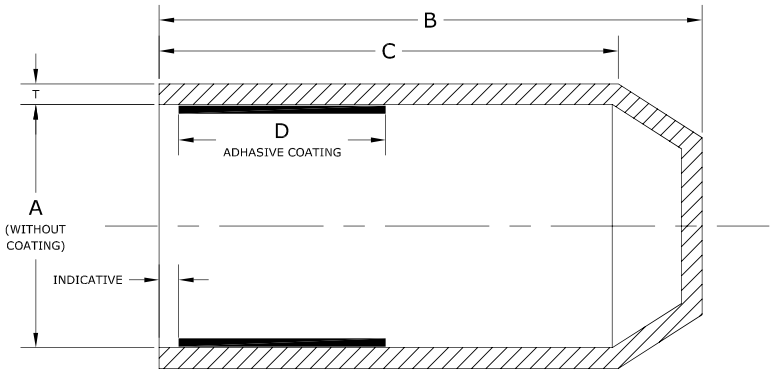

END CAP
(AS SUPPLIED)
SECTIONAL VIEW

MATERIAL SPECIFICATIONS

	Characteristics	Test Class	Value	Test Method
A	**Physical Properties**			
1	Specific Gravity	Type	1.05 ± 0.2	ASTM D-1505
2	Water Absorption	Type	1 % (max)	ASTM D-570 / ISO 62
3	Tensile Strength	Routine	10 N /sqmm (min)	ASTM D-412 / ISO 37
4	Ultimate Elongation	Routine	300% (min)	ASTM D-412 / ISO 37
5	Hardness	Type	45 shore D ± 3	ASTM D-2240
6	**Thermal Test**			
B	Thermal Ageing (120°C for 500 hrs)			
1	Tensile Strength	Type	8 N/sqmm (min)	ASTM D-412 / ISO 37
2	Ultimate Elongation	Type	200% (min)	ASTM D-412 / ISO 37
C	**Electrical Properties**			
1	Volume Resistivity	Type	10^{12} ohm-cm. (min)	ASTM D-257 / IEC 93
2	Dielectrical Strength	Type	10 kV/mm. (min)	ASTM D-149 / IEC 243
3	Dielectric Constant	Type	5 (max)	ASTM D-150 / IEC 250

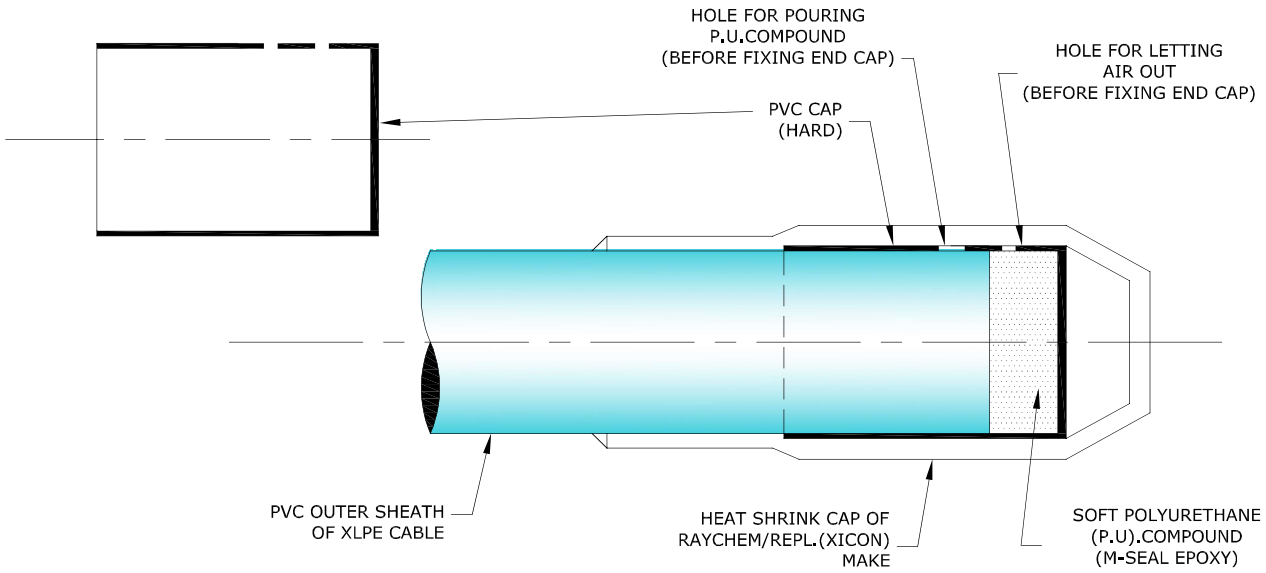

END CAP
(AFTER HEAT SHRINKING OVER THE CABLE END)

Note : 1) All dimension in mm
2) Colour Black
3) Size as mentioned in the table shall be stencilled on respective item

BSES

DRAWING No. MISC/E/4-1131/1698

SCALE :NOT TO SCALE | DATE: 09-05-2011

END SEALING CAP
(FOR XLPE CABLE)

DRAWN BY: | CHECKED BY: | APPROVED BY:

REVISIONS

Addl V.P.

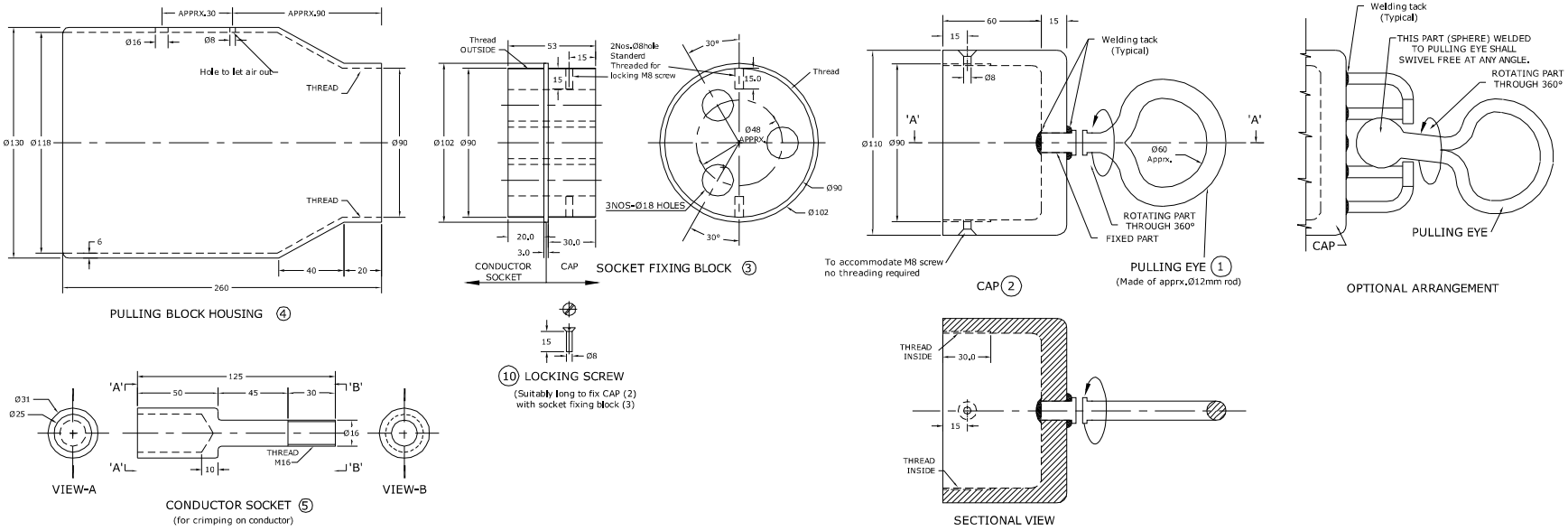

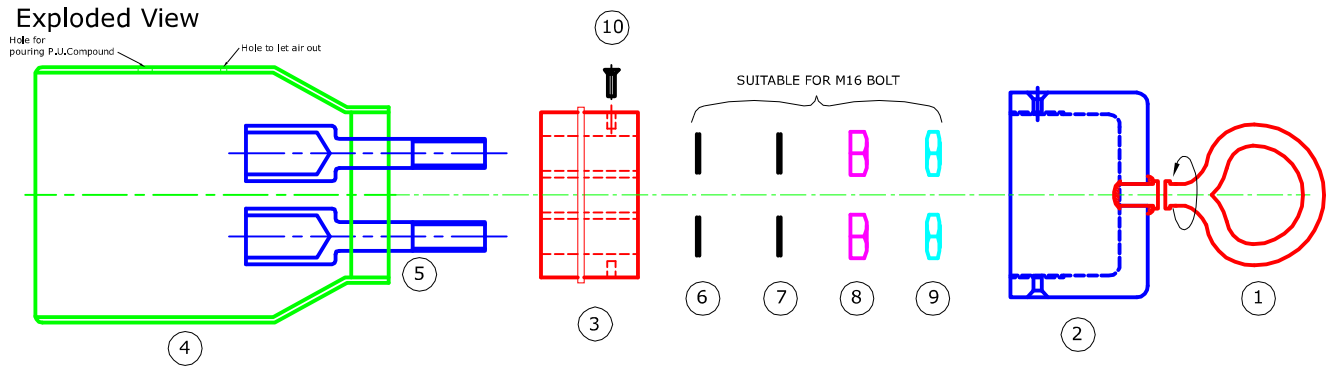

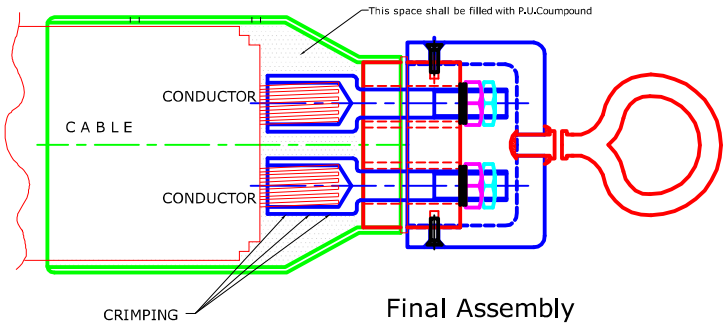

EXAMPLE:
1) For cable size 33kV, 3/C X 400sq mm Al XLPE.
2) Diameter over conductor : 23.8mm apprx.
   Overall diameter : 108±3mm apprx.
   Pulling force applicable on the cable : 30 N/sq mm
   Pulling eye shall withstand total force of : 36000N+Safety margin

NOTE:
1) All Dimensions are in mm, unless otherwise stated.
2) This drawing is typical / indicative.Separate dimensioned drawing for cable pulling eye assembly, suitable for required size & rating of cables, shall be submitted for approval,prior to manufacturing.
3) After fixing cable pulling eye, P.U.(Poly-Urethane) Compound shall be poured to occupy inner spaces to avoid ingress of Water / Moisture.
4) After P.U.Compound oozes/flows out from the cable side,the same edge shall be sealed with suitable sleeve/Tape.

NO.	DISCRIPTION	QTY.	MATERIAL
10	LOCKING SCREW	2	M.S.Zinc-Plated
9	LOCK NUT	3	M.S.Zinc-Plated
8	NUT	3	M.S.Zinc-Plated
7	SPRING. WASHER	3	M.S.Zinc-Plated
6	PLAIN WASHER	3	M.S.Zinc-Plated
5	CONDUCTOR SOCKET	3	AL.
4	PULLING BLOCK HOUSING	1	M.S.Zinc-Plated
3	SOCKET FIXING BLOCK	1	M.S.Zinc-Plated
2	CAP	1	M.S.Zinc-Plated
1	PULLING EYE	1	M.S.Zinc-Plated

BSES

DRAWING No. MISC/E/4-1133/1699

SCALE :NOT TO SCALE | DATE: 09-05-2011

CABLE PULLING EYE ASSEMBLY (TYPICAL)

DRAWN BY: | CHECKED BY: | APPROVED BY:

REVISIONS

Addl V.P.

ANNEXURE-G

QUALITY ASSURANCE PLAN (QAP)
FOR 66 kV EHV CABLES

S. NO.	COMPONENT & OPERATION	CHARACTERISTICS	CLASS	TYPE OF CHECK	QUANTUM OF CHECK	REFERENCE DOCUMENT	ACCEPTANCE NORMS	FORMAT OF RECORD	AGENCY			Remark
									SV	MFR	BSES	
1	2	3	4	5	6	7	8	9	10	11	12	13
	Legend : SV : Sub-Vendor of Cable Manufacturer, MFR : Cable Manufacturer, MPS : Material Purchase Specification,											
	P : Perform, W : Witness, V : Verification											
A	**RAW MATERIAL**											
1	Aluminium/Copper Rod	a) Tensile strength	Major	Physical	Sample	MPS	MPS	Reg./Sheet	P	P/V	V	
		b) Resistivity	Major	Electrical	Sample	MPS	MPS	Reg./Sheet	P	P/V	V	
		c) Diameter	Major	Physical	Sample	MPS	MPS	Reg./Sheet	P	P/V	V	
		d) Chemical composition	Major	Chemical	Sample	MPS	MPS	Test certificate	P	V	V	
		e) Surface finish	Major	Visual	Sample			-	P	P	_	
2	PVC Compound	a) Tensile Strength	Major	Physical	Sample	MPS	MPS	Reg./Sheet	P	P/V	V	
		b) Elongation at break	Major	Physical	Sample	MPS	MPS	Reg./Sheet	P	P/V	V	
		c) Thermal stability	Major	Physical	Sample	MPS	MPS	Reg./Sheet	P	P/V	V	
3	**TR-XLPE** Compound (Borealis/Dow chemical/ Hanwa)	a) Packing	Minor	Visual	100%	MPS	MPS	-	P	V	-	
		b) Tensile Strength	Major	Physical	Sample	MPS	MPS	Reg./Sheet	P	P/V	V	
		c) Elongation at break	Major	Physical	Sample	MPS	MPS	Reg./Sheet	P	P/V	V	
		d) Hot set test	Major	Physical	Sample	MPS	MPS	Reg./Sheet	P	P/V	V	
		e) Volume Resistivity	Major	Electrical	Sample	MPS	MPS	Reg./Sheet	P	P/V	V	
		f) Cure Curve (Max. Torque)	Major	Physical	Sample	MPS	MPS	Reg./Sheet	-	P	V	
		g) Density	Major	Physical	Sample	MPS	MPS	Reg./Sheet	P	P/V	V	
4	Semi-conducting Compound (Borealis/Dow chemical/ Hanwa)	a) Packing	Minor	Visual	100%	MPS	MPS	-	P	V	-	
		b) Volume Resistivity	Major	Electrical	Sample	MPS	MPS	Reg./Sheet	P	P/V	V	
		c) Tensile Strength	Major	Physical	Sample	MPS	MPS	Reg./Sheet	P	P/V	V	
		d) Elongation at break	Major	Physical	Sample	MPS	MPS	Reg./Sheet	P	P/V	V	
		e) Cure Curve (Max. Torque)	Major	Physical	Sample	MPS	MPS	Reg./Sheet	-	P	V	
		f) Density	Major	Physical	Sample	MPS	MPS	Reg./Sheet	P	P/V	V	
5	Copper tape	a) Thickness & width	Major	Physical	Sample	MPS	MPS	Reg./Sheet	P	P/V	V	
		b) Tensile Strength	Major	Physical	Sample	MPS	MPS	Reg./Sheet	P	P/V	V	
		c) Elongation at break	Major	Physical	Sample	MPS	MPS	Reg./Sheet	P	P/V	V	
		d) Resistivity	Major	Electrical	Sample	MPS	MPS	Reg./Sheet	P	P/V	V	
6.	Armour wires/strips (Galvanised steel)	a) Dimensions	Major	Physical	Sample	MPS	MPS	Reg./Sheet	P	P/V	V	
		b) Surface condition/finish	Major	Visual	Sample	MPS	MPS	Reg./Sheet	P	P/V	V	
		c) Tensile Strength	Major	Physical	Sample	MPS	MPS	Reg./Sheet	P	P/V	V	
		d) Elongation at break	Major	Physical	Sample	MPS	MPS	Reg./Sheet	P	P/V	V	
		e) Torsion test for round wire	Major	Physical	Sample	MPS	MPS	Reg./Sheet	P	P/V	V	
		f) Wrapping test	Major	Physical	Sample	MPS	MPS	Reg./Sheet	P	P/V	V	
		g) Mass of zinc coating	Major	Physical	Sample	MPS	MPS	Reg./Sheet	P	P/V	V	
		h) Uniformity of zinc coating	Major	Physical	Sample	MPS	MPS	Reg./Sheet	P	P/V	V	
		i) Adhesion test	Major	Physical	Sample	MPS	MPS	Reg./Sheet	P	P/V	V	
		j) Resistivity test	Major	Electrical	Sample	MPS	MPS	Reg./Sheet	P	P/V	V	
7	Water Swellable	a) Dimensions	Minor	Physical	Sample	MPS	MPS	Reg./Sheet	P	P/V	V	

QUALITY ASSURANCE PLAN (QAP)
FOR 66 kV EHV CABLES

S. NO.	COMPONENT & OPERATION	CHARACTERISTICS	CLASS	TYPE OF CHECK	QUANTUM OF CHECK	REFERENCE DOCUMENT	ACCEPTANCE NORMS	FORMAT OF RECORD	AGENCY			Remark
									SV	MFR	BSES	
1	2	3	4	5	6	7	8	9	10	11	12	13
	Legend : SV : Sub-Vendor of Cable Manufacturer, MFR : Cable Manufacturer, MPS : Material Purchase Specification,											
	P : Perform, W : Witness, V : Verification											
	tape	b) Swelling height	Major	Physical	Sample	MPS	MPS	Reg./Sheet	P	P/V	V	
		c) Resistivity	Major	Electrical	Sample	MPS	MPS	Reg./Sheet	P	P/V	V	
		d) Weight	Major	Physical	Sample	MPS	MPS	Reg./Sheet	P	P/V	V	
8	Steel Drum	a) Dimension	Major	Meas.	1 sample per size	IS 10418 / Purchase order		-	P	P	-	
		b) Finish & workman ship	Minor	Visual	1 sample per size	Compliance to standard Engineering norms & free from surface defects		-	P	P	-	
9	Binder tape	a) Dimensions & material	Minor	Physical	Sample	MPS	MPS	-	P	P	-	
10	Polypropylene filler	a) Size	Minor	Physical	Sample	Purchase order	Purchase order	-	P	P	-	
11	Heat shrinkable end cap	a) Bore diameter	Major	Physical	1 sample per size	--	--	-	-	P	-	
		b) Length of end cap	Minor	Physical	1 sample per size	--	--	-	-	P	-	
B	**PROCESS INSPECTION**											
1	Wire Drawing	a) Diameter	Major	Physical	Sample			Reg./Sheet	-	P	V	
		b) Surface finish	Major	Visual	100 %	Smooth & free from defects		--	-	P	-	
		c) Tensile test (for Al)	Major	Physical	Sample	IS: 8130/84	IS: 8130/84	Reg./Sheet	-	P	V	
		d) Elongation test (for Cu)	Major	Physical	Sample	IS: 8130/84	IS: 8130/84	Reg./Sheet	-	-	V	
		e) Wrapping test (for Al)	Major	Physical	Sample	IS: 8130/84	IS: 8130/84	Reg./Sheet	-	P	V	
2	Stranding	a) No. of wires/strands	Major	Physical	At the time of m/c setting			Reg./Sheet	-	P	V	
		b) Lay length & Lay direction	Major	Physical	-do-			-	-	P	V	
		c) Dia of conductor	Major	Physical	During setting & once in each shift			Reg./Sheet	-	P	V	
		d) Surface finish	Major	Visual	100 %	No surface defects and free from sharp edges, scratches, grease, oil etc.		-	-	P	-	
3	Core extrusion (Conductor screen, Insulation & insulation screen)	a) Compound Make/Grade	Major	Visual	During m/c setting			-	-	P	-	Insulation screen shall be freely strippable, without application of heat.
		b) Thickness of insulation & extruded S.C. layers	Major	Physical	During m/c setting after stabilisation	Tech. Data Sheet / IS 7098/III	Tech. Data Sheet / IS 7098/III	Reg./Sheet	-	P	V	
		c) Surface finish	Minor	Visual	100 %	Smooth & free from defects		-	-	P	-	
		d) Printing on outer semi- conducting layer	Major	Visual	100 %	"DO NOT HEAT, FREELY STRIPPABLE"		-	-	P	-	
		e) Tensile Strength	Major	Physical	Sample	IS 7098/III	IS 7098/III	Reg./Sheet	-	P	V	
		f) Elongation at break	Major	Physical	Sample	IS 7098/III	IS 7098/III	Reg./Sheet	-	P	V	
		g) Hot set test	Major	Physical	Sample	IS 7098/III	IS 7098/III	Reg./Sheet	-	P	V	
		g1) Ovality of core	Minor	Physical	Sample	Tech. Data Sheet	Tech. Data Sheet	Reg./Sheet	-	P	V	

QUALITY ASSURANCE PLAN (QAP)
FOR 66 kV EHV CABLES

S. NO.	COMPONENT & OPERATION	CHARACTERISTICS	CLASS	TYPE OF CHECK	QUANTUM OF CHECK	REFERENCE DOCUMENT	ACCEPTANCE NORMS	FORMAT OF RECORD	AGENCY			Remark
									SV	MFR	BSES	
1	2	3	4	5	6	7	8	9	10	11	12	13
	Legend : SV : Sub-Vendor of Cable Manufacturer, MFR : Cable Manufacturer, MPS : Material Purchase Specification,											
	P : Perform, W : Witness, V : Verification											
		h) Eccentricity of insulation	Minor	Physical	Sample	Tech. Data Sheet	Tech. Data Sheet	Reg./Sheet	-	P	V	
		i) Core diameter	Minor	Physical	Sample	Tech. Data Sheet	Tech. Data Sheet	Reg./Sheet	-	P	V	
		j) Void & contamination test for insulation (Silicon Oil test)	Major	Physical	Sample			-	-	P	V	
		k) Wafer boil test for extruded semi-conducting layers	Major	Physical	1 sample/lot	BIS draft Specn	BIS draft Specn	Reg./Sheet	-	P	V	
4	Taping - water Swellable semi-conducting	a) Dimensions	Minor	Physical	Sample	Tech. Data Sheet	Tech. Data Sheet	-	-	P	-	
		b) Tape Application (Overlap)	Minor	Visual	During m/c setting	Suitable overlap	Suitable overlap	-	-	P	-	
5	Taping - Copper tape	a) Width & Thickness of tape	Major	Physical	During m/c setting	Tech. Data Sheet	Tech. Data Sheet	Reg./Sheet	-	P	V	
		b) Number of tapes	Major	Visual	During m/c setting	Tech. Data Sheet	Tech. Data Sheet	Reg./Sheet	-	P	V	
		c) Tape application (Overlap)	Minor	Visual	During m/c setting	Tech. Data Sheet	Tech. Data Sheet	-	-	P	-	
6	Laying up	a) Identification of cores	Major	Visual	During m/c setting	Tech. Data Sheet	Tech. Data Sheet	-	-	P	-	Cores shall be laidup with PP fillers & suitable tape binder shall be provided over laid up assembly
		b) Direction of lay, core Sequence & Lay length	Major	Visual	During m/c setting	IS 7098/III, PIL- W-02	IS 7098/III, PIL- W-02	-	-	P	-	
		c) Application of binder tape	Minor	Visual	During m/c setting	Tech. Data Sheet		-	-	P	-	
		d) Shape of laid up assembly	Minor	Visual	100%	Reasonably circular	Reasonably circular	-	-	P	-	
7	Inner sheath	a) Material & type	Major	Visual	During m/c setting	Tech. Data Sheet	Tech. Data Sheet	-	-	P	-	
		b) Thickness	Major	Physical	During m/c setting & drum change	Tech. Data Sheet & IS 7098/III	ech. Data Sheet & IS 7098/III	Reg./Sheet	-	P	V	
		c) Surface finish	Minor	Visual	100 %	Surface shall be smooth & free from defects		-	-	P	-	
		d) Colour of inner sheath	Major	Visual	100 %	Tech. Data Sheet	Tech. Data Sheet	-	-	P	-	
8	Armouring	a) Dimension of armour wires/strips	Major	Physical	During m/c setting	Tech. Data Sheet	Tech. Data Sheet	Reg./Sheet	-	P	V	No negative tol. on strip thickness/wire diameter
		b) No. of armour strip/wire	Major	Counting	During m/c setting	Tech. Data Sheet	Tech. Data Sheet	Reg./Sheet	-	P	V	
		c) Armour coverage	Minor	Visual	During m/c setting	IS 7098/III	IS 7098/III	-	-	P	-	
		d) Direction of lay	Major	Visual	During m/c setting	IS 7098/III	IS 7098/III	-	-	P	-	
		e) Lay length/Gear setting	Minor	Visual	During m/c setting			-	-	P	-	
		f) Surface finish	Major	Visual	100 %	No cross over/over riding of wire/strip		-	-	P		
9	Outer sheath/Rewinding	a) Material & type	Major	Visual	During m/c setting	Tech. Data Sheet	Tech. Data Sheet	-	-	P	-	
		b) Anti rodent & termite additives	Major	Visual	Each loading			Reg./Sheet	-	P	V	

BSES

QUALITY ASSURANCE PLAN (QAP)
FOR 66 kV EHV CABLES

S. NO.	COMPONENT & OPERATION	CHARACTERISTICS	CLASS	TYPE OF CHECK	QUANTUM OF CHECK	REFERENCE DOCUMENT	ACCEPTANCE NORMS	FORMAT OF RECORD	AGENCY			Remark
									SV	MFR	BSES	
1	2	3	4	5	6	7	8	9	10	11	12	13
	Legend : SV : Sub-Vendor of Cable Manufacturer, MFR : Cable Manufacturer, MPS : Material Purchase Specification,											
	P : Perform, W : Witness, V : Verification											
		b) Thickness	Major	Physical	Each length	Tech. Data Sheet	Tech. Data Sheet	Reg./Sheet	-	P	V	
		c) Overall diameter	Major	Physical	Each length	Tech. Data Sheet	Tech. Data Sheet	Reg./Sheet	-	P	V	
		d) Surface finish & colour of sheath	Major	Visual	100 %	Surface smooth & free from defects. Colour as per Tech. Data Sheet		-	-	P	-	
		e) Cable length verification	Major	Visual	Each length	Manufacturing Plan	Manufacturing Plan	-	-	P	-	
		f) Marking	Major	Visual	Each length	As per approved GTP/cross sectiona drawing		Reg./Sheet	-	P	V	
C	**FINAL INSPECTION**											
1	Routine tests	a) High Voltage	Critical	Electrical	100 %	IS 7098/III	IS 7098/III	Test Report	-	P	V	
		b) Conductor Resistance	Critical	Electrical	100 %	IS 8130/84	IS 8130/84	Test Report	-	P	V	
		c) Partial Discharge	Critical	Electrical	100 %	IS 7098/III	IS 7098/III	Test Report	-	P	V	
		d) Impulse	Critical	Electrical	One sample per lot			Test Report		P	V	
		e) Armour Coverage	Critical	Physical	One sample per lot			Test Report		P	V	
		f) Physiacal Dimensions	Critical	Physical	One sample per lot			Test Report		P	V	
		g) Freely Strippable insulation screen (Strippability Test)	Major	Physical	One sample per lot	Factory Standard	Factory Standard	Test Report	-	P	V	
2	Stage Inspection	Wire Drawing	Major	Visual	100 %	Tech. Data Sheet	IS/IEC	Test Report	-	P	W	Stage Inspection shall be conducted subject to BSES requirement
		Extrusion process	Major	Visual	100 %	Tech. Data Sheet	IS/IEC	Test Report	-	P	W	
		Raw maerial inspection at factory	Major	Physical	100 %	Tech. Data Sheet	IS/IEC	Test Report	-	P	W	
		Wrapping of Aluminium	Major	Physical	100 %	Tech. Data Sheet	IS/IEC	Test Report	-	P	W	
		Tensile test for Aluminium	Major	Physical	100 %	Tech. Data Sheet	IS/IEC	Test Report	-	P	W	
		a) Annealing test for copper	Major	Physical	Appendix A to IS 7098/III, each lot sample basis	IS 8130/84	IS 8130/84	-	-	P	V	Verification of process records.
		b) Tensile test for aluminium	Major	Physical		IS 8130/84	IS 8130/84	-	-	P	V	
		c) Wrapping test for aluminium	Major	Physical		IS 8130/84	IS 8130/84	-	-	P	V	Tests N/A on finished conductor.
		d) Conductor resistance test	Major	Electrical	Appendix A to IS 7098/III, each lot sample basis	IS 8130/84	IS 8130/84	Test Report	-	P	W	
		e) Test for thickness of insulation & sheath	Major	Physical		IS 7098/III & Tech. Data sheet	IS 7098/III & Tech. Data sheet	Test Report	-	P	W	
		f) Hot set test for insulation	Major	Physical		IS 7098/III	IS 7098/III	Test Report	-	P	W	

BSES

QUALITY ASSURANCE PLAN (QAP)

FOR 66 kV EHV CABLES

S. NO.	COMPONENT & OPERATION	CHARACTERISTICS	CLASS	TYPE OF CHECK	QUANTUM OF CHECK	REFERENCE DOCUMENT	ACCEPTANCE NORMS	FORMAT OF RECORD	AGENCY			Remark
									SV	MFR	BSES	
1	2	3	4	5	6	7	8	9	10	11	12	13
	Legend : SV : Sub-Vendor of Cable Manufacturer, MFR : Cable Manufacturer, MPS : Material Purchase Specification,											
	P : Perform, W : Witness, V : Verification											
		g) Tensile strength & Elongation at break of insulation & outer sheath	Major	Physical		IS 7098/III & IS 5831/84	IS 7098/III & IS 5831/84	Test Report	-	P	W	
		h) Partial discharge test	Critical	Electrical		IS 7098/III	IS 7098/III	Test Report	-	P	W	
		i) High voltage test	Critical	Electrical		IS 7098/III	IS 7098/III	Test Report	-	P	W	
		j) Insulation resistance (Volume resistivity) test	Major	Electrical		IS 7098/III	IS 7098/III	Test Report	-	P	W	
		k) Tests for dimension of armour wires/strips	Major	Physical		IS 3975, IS 10810 Pt. 36 & Tech. Data sheet		Test Report	-	P	W	
		l) Test for anti termite & anti rodent property of outer sheath	Major	Physical		Tech. Data Sheet	Tech. Data Sheet	Reg./Sheet	-	P	W	
		m) Rewinding of cable on drum	Major	Visual		To check cable appearance, drum appearance, cable winding, packing, embossing/printing/sequential marking		Reg./Sheet	-	P	W	
		n) Void & contamination test for insulation (Silicon Oil test)	Major	Physical				Reg./Sheet	-	P	W	
3	Acceptance tests	o) Wafer boil test for extruded semi-conducting layers	Major	Physical				Reg./Sheet	-	P	W	
		p) Freely Strippable insulation screen	Major	Physical		Factory Standard	Factory Standard	Test Report	-	P	W	
		q) Water Penetration test (WPT) on core (i.e.Logitudinal Water Blocking Test)	Major	Physical	Each Lot Sample Basis	IEC:60502	IEC:60502	Test Report	-	P	W	**Test shall be conducted for leakage of water through conductor.**
		r) Armour coverage	Major	Physical		As per data sheet & FS	As per data sheet & FS	Test Report	-	P	W	
		s) Ovality	Major	Physical		As per data sheet	As per data sheet	Test Report	-	P	W	
		t) Eccentricity	Major	Physical		As per data sheet	As per data sheet	Test Report	-	P	W	
		u) Mass & uniformity & zinc coating on armour	Major	Physical		As per data sheet & FS	As per data sheet & FS	Test Report	-	P	W	
		v) Resistivity of Strip armour	Major	Electrical		As per data sheet & FS	As per data sheet & FS	Test Report	-	P	W	
		w) Swelling height of water swellable tape	Major	Physical		As per data sheet & FS	As per data sheet & FS	Test Report	-	P	W	
		x) Flammability test	Major	Physical		As per IS-78098/II/2011	As per IS-78098/II/2011	Test Report	-	P	W	
		y)Impulse withstand test	Critical	Electrical		IS 7098/III	IS 7098/III	Test Report	-	P	W	

QUALITY ASSURANCE PLAN (QAP)
FOR 66 kV EHV CABLES

S. NO.	COMPONENT & OPERATION	CHARACTERISTICS	CLASS	TYPE OF CHECK	QUANTUM OF CHECK	REFERENCE DOCUMENT	ACCEPTANCE NORMS	FORMAT OF RECORD	AGENCY			Remark
									SV	MFR	BSES	
1	2	3	4	5	6	7	8	9	10	11	12	13
	Legend : SV : Sub-Vendor of Cable Manufacturer, MFR : Cable Manufacturer, MPS : Material Purchase Specification,											
	P : Perform, W : Witness, V : Verification											
		z) Ageing & Water absorption test(Gravimetric) on Insulation & Outer sheath	Major	Physical		IS 5831/84	IS 5831/84	Test Report	-	P	W	
		z1) Heating Cycle with Potential	Critical	Electrical	sample basis, once per PO			Test Report	-	P	W	
		z2) Raw Material Verification in all aspects	Major	Physical	Each Lot					P	W	
4	Type tests at vendor's works	a) Tests on conductor										
		i) Annealing test for copper	Major	Physical		IS 8130/84	IS 8130/84	-	-	P	V	Verification of process records. Tests N/A on finished conductor.
		ii) Tensile test for aluminium	Major	Physical		IS 8130/84	IS 8130/84	-	-	P	V	
		iii) Wrapping test for aluminium	Major	Physical		IS 8130/84	IS 8130/84	-	-	P	V	
		iv) Conductor resistance test	Major	Electrical		IS 8130/84	IS 8130/84	Test Report	-	P	V	
		b) Tests for armouring wires/strips										
		i) Dimensions of wire/strip	Major	Physical		IS 3975, IS 10810 Pt. 36 & Tech. Data sheet		Test Report	-	P	W	
		ii) Tensile strength & Elongation at break	Major	Physical		IS 3975	IS 3975	Test Report	-	P	W	Only for Steel wires/strips
		iii) Torsion test for wire	Major	Physical		IS 3975	IS 3975	Test Report	-	P	W	
		iv) Winding test for strip	Major	Physical		IS 3975	IS 3975	Test Report	-	P	W	
		v) Uniformity of zinc coating	Major	Chemical		IS 3975	IS 3975	Test Report	-	P	W	
		vi) Mass of zinc coating	Major	Chemical		IS 3975	IS 3975	Test Report	-	P	W	
		vii) Resistivity of wire/strip	Major	Electrical		IS 3975	IS 3975	Test Report	-	P	W	
		c) Test for thickness of insulation & sheath	Major	Physical		IS 7098/III & Tech. Data sheet	IS 7098/III & Tech. Data sheet	Test Report	-	P	W	
		d) Physical tests for insulation									W	
		i) Tensile strength & Elongation test	Major	Physical		IS 7098/III	IS 7098/III	Test Report	-	P	W	
		ii) Ageing in air oven	Major	Physical		IS 7098/III	IS 7098/III	Test Report	-	P	W	
		iii) Hot set test	Major	Physical		IS 7098/III	IS 7098/III	Test Report	-	P	W	
		iv) Shrinkage test	Major	Physical		IS 7098/III	IS 7098/III	Test Report	-	P	W	
		v) Water absorption (gravimetric)	Major	Physical	One sample per Tender	IS 7098/III	IS 7098/III	Test Report	-	P	W	
		e) Physical tests for outer sheath									W	
		i) Tensile strength & Elongation test at break	Major	Physical		IS 5831/84	IS 5831/84	Test Report	-	P	W	
		ii) Ageing in air oven	Major	Physical		IS 5831/84	IS 5831/84	Test Report	-	P	W	
		iii) Shrinkage test	Major	Physical		IS 5831/84	IS 5831/84	Test Report	-	P	W	

QUALITY ASSURANCE PLAN (QAP)
FOR 66 kV EHV CABLES

S. NO.	COMPONENT & OPERATION	CHARACTERISTICS	CLASS	TYPE OF CHECK	QUANTUM OF CHECK	REFERENCE DOCUMENT	ACCEPTANCE NORMS	FORMAT OF RECORD	AGENCY			Remark
									SV	MFR	BSES	
1	2	3	4	5	6	7	8	9	10	11	12	13
	Legend : SV : Sub-Vendor of Cable Manufacturer, MFR : Cable Manufacturer, MPS : Material Purchase Specification,											
	P : Perform, W : Witness, V : Verification											
		iv) Hot deformation test	Major	Physical		IS 5831/84	IS 5831/84	Test Report	-	P	W	
		v) Loss of mass in air oven	Major	Physical		IS 5831/84	IS 5831/84	Test Report	-	P	W	
		v) Heat shock test	Major	Physical		IS 5831/84	IS 5831/84	Test Report	-	P	W	
		vi) Thermal stability test	Major	Physical		IS 5831/84	IS 5831/84	Test Report	-	P	W	
		f) Electrical tests in sequence									W	
		i) Partial discharge test	Critical	Electrical		IS 7098/III	IS 7098/III	Test Report	-	P	W	
		ii) Bending test	Major	Physical		IS 7098/III	IS 7098/III	Test Report	-	P	W	
		iii) Partial discharge test	Critical	Electrical		IS 7098/III	IS 7098/III	Test Report	-	P	W	
		iv) Dielectric power factor as a function of voltage	Major	Electrical		IS 7098/III	IS 7098/III	Test Report	-	P	W	
		v) Dielectric power factor as a function of temperature	Major	Electrical		IS 7098/III	IS 7098/III	Test Report	-	P	W	
		vi) Heating cycle test	Major	Electrical		IS 7098/III	IS 7098/III	Test Report	-	P	W	
		vii) Dielectric power factor as a function of voltage	Major	Electrical		IS 7098/III	IS 7098/III	Test Report	-	P	W	
		viii) Partial discharge test	Critical	Electrical		IS 7098/III	IS 7098/III	Test Report	-	P	W	
		ix) Impulse withstand test	Critical	Electrical		IS 7098/III	IS 7098/III	Test Report	-	P	W	
		x) High voltage test	Critical	Electrical		IS 7098/III	IS 7098/III	Test Report	-	P	W	
		g) Insulation resistance (Volume resistivity test)	Major	Electrical		IS 7098/III	IS 7098/III	Test Report	-	P	W	
		h) Flammability test	Major	Physical		IS 7098/III	IS 7098/III	Test Report	-	P	W	
D	**PACKING & MARKING**											
1	Packing & Marking	a) Cable end sealing	Major	Visual	100 %	IS 7098/III/ Agreement	IS 7098/III/ Agreement	-	-	P	W/V	BSES representative may verify these characteristics on randomly selected drums.
		b) Pulling eye at leading end- removed from vendor scope, end cap shall be provided at both the end of cable	Major	Visual	100 %	As per agreement	As per agreement	-	-	P	W/V	
		b) Stencilling/Marking on drum	Minor	Visual	100 %	IS 7098(Part 2):2011/ Agreement	IS 7098(Part 2):2011/ Agreement	-	-	P	V	

QUALITY ASSURANCE PLAN (QAP)
FOR 66 kV EHV CABLES

S. NO.	COMPONENT & OPERATION	CHARACTERISTICS	CLASS	TYPE OF CHECK	QUANTUM OF CHECK	REFERENCE DOCUMENT	ACCEPTANCE NORMS	FORMAT OF RECORD	AGENCY			Remark
									SV	MFR	BSES	
1	2	3	4	5	6	7	8	9	10	11	12	13
	Legend : SV : Sub-Vendor of Cable Manufacturer, MFR : Cable Manufacturer, MPS : Material Purchase Specification,											
	P : Perform, W : Witness, V : Verification											

Note

1. Checks specified above for Raw Material, In-Process and Final Inspection shall be as relevant to the specific cable construction.
2. Number of samples shall be selected as per Factory Standard/Agreement wherever 'sample' is indicated for extent of check.
3. Plant standards shall be followed in case Technical Data Sheet does not include requirements for characteristics to be checked.
4. BSES may witness Raw material and in process inspection in addition to Routine/Acceptance tests at any time/stage of manufacturing.
5. BSES's Inspector may randomly select a cable drum for type testing at vendor's works.
6. For each of the offered lot for inspection, BSES may randomly select one cable drum for testing of end cap "Destructive testing" to verify adhesion of sealing cap to cable outer sheath. .
7. All factory Type Tests shall be Witnessed by BSES

ANNEXURE-H

Testing and manufacturing process requirements w. r. t. TR- XLPE insulation

All cables made with TR-XLPE Insulation should be tested and/or certified to meet the following performance parameters as per ANSI /ICEA S-94-649 after one year AWTT.

Property	Units	Requirements Values
Min. Avg. Electrical Breakdown Strength(qual. test)	Kv/mm	> 25
Impulse Strength	Kv/mm	> 83
Water Tree Length	mm	0.25
Max. Bowtie Tree Density	(Number per 16.4 cu. cm)	Maximum 15 (0.12-0.25 mm range)

Manufacturing processes to produce high-quality cables with the following characteristics:

- Cure consistency with hot set/creep less than 100%
- No voids larger than 75 microns per 16.4 cubic cm
- No ambers larger than 250 microns per 16.4 cubic cm
- No contaminants larger than 125 microns and less than 5 between 50-125 microns per cubic 16.4 cubic cm tested.
- Neutral indent on cable is less than 375 microns
- Cable insulation concentricity greater than 90% tested
- No protrusions greater than 75 microns at the conductor shield and 125 microns at the insulation shield

ANNEXURE-I

Sl. No.	Document Name	Clause No.	Deviation	Reason	Merit to BSES

BSES

Technical Specification

for

33 kV 3Cx400 sq mm cable

Specification No: BSES-TS-09-33CBL-R0

Rev:		0
Date:		8 Apr 2022
Prepared by	Abhishek Vashistha	
	Gautam Deka/Pronab Bairagi	
Reviewed by	Puneet Duggal	
	Amit Tomar	
Approved by	Gaurav Sharma	
	K. Sheshadri	

Index

Sl no	Description	Page no
1	General Specification	3
2	Annexure A: Scope, Documentation and Delivery Schedule	17
3	Annexure B: General Technical Particulars (GTP)	18
4	Annexure C: List of BSES approved Sub-Vendors	25
5	Annexure D : Service Conditions	27
6	Annexure E: General Arrangement Drawing for End-sealing Cap	28
7	Annexure-F General Arrangement Drawing for Cable pulling eye	29
8	Annexure G: BSES format (typical) for Quality Assurance Plan (QAP) for H. T. Cables	30
9	Annexure H: Testing and manufacturing process requirements w. r. t. TR- XLPE insulation	38
10	Annexure I: Deviation format	38

General Specification

1.0.0 Codes & Standards

The cables shall be designed, manufactured and tested in accordance with the following National Standards and IEC Standards.

National Standards

IS 7098 Part-2	Cross linked polyethylene (XLPE) insulated PVC sheathed cables for working voltages from 3.3 kV up to and including 33 kV.
IS 5831 : 1984	PVC insulation & sheath of electric cables.
IS 10810 : 1984	Methods of test for cables.
IS 8130 : 1984	Conductors for insulated electric cables and flexible cords.
IS 3975 : 1999	Mild steel wires, formed wires and tapes for armouring of cables.
IS 0462 (Part 1) / 1983	Fictitious Calculation Method for determination of dimensions of protective covering of cables

International Standards

IEC 60183	Guide to the selection of high voltage cables
IEC 60228	Conductors of insulated cables. Guide to the dimensional limits of circular conductors.
IEC 60332 - 3	Tests on electric cables under fire conditions. Part 3: Tests on bunched wires or cables.
IEC 60502 - 2	Power cables for rated voltages from 6 kV (Um = 7.2 kV) up to 30 kV (Um = 36 kV)
IEC 60811 Pts 1 through 5	Common test methods for insulating and sheathing materials of electric cables.
IEC 885 Pts 1 through 3	Electric test methods for electric cables.
IEC 28	International Standard of Resistance for Copper
IEC 332	Test on Electric Cables under fire conditions

2.0.0 Cable Construction Features

This Specification generally covers following types / sizes of XLPE H. T. Cables used in BSES network in Delhi Discom area, mostly under-ground (buried, with chances of flooding by water) or for laying on racks, in ducts, trenches, conduits, and so on.

Note: (Ref.: Table stating Cable sizes given below.)

Cable Code:

As per IS, cable designations comprise of following codes / options, as applicable for this Specification:

(N.A. - Not applicable for Specification)

-	(with Copper conductor)	(N.A.)
A	Aluminium conductor	
---	---	---
2X	XLPE insulation	
---	---	---
W	Steel round Wire armour	(N.A.)
W W	Double steel round Wire armour	(N.A.)
Wa	Non-magnetic round Wire armour	
F	Steel formed wire (strip) armour	
FF	Double steel formed wire (strip) armour	(N.A.)
Fa	Non-magnetic formed wire (strip) armour	(N.A.)
-	(“un-armoured” or without armour)	(N.A.)
---	---	---
Y	PVC outer sheath	

Sr. No.	Description	Conductor Material	Cable Code
1.	33 kV, 3C x 400 sq. mm.	Al	A 2X W Y

Description of each item mentioned in the Specification (the text, BOQ, GTP or any site specific requirement) shall be followed, along with IS: 7098 – Part 2.

2.1.1	**Conductor**	a) Electrolytic Grade Stranded Aluminium Conductor b) Grade: H2 as per IS: 8130 / 1984 (For Al) c) Stranded, compacted and circular in shape

		d) Class 2 e) "Longitudinal Water-Blocking Arrangement" (or water-tight construction or water barrier protection) shall be provided within the Conductor by water swelling yarns/tapes in the interstices of the conductor. The fiber/yarn shall turn into jelly/swell, when in contact with water making the conductor water tight as per IEC 60502-2 f) Semi-conducting water blocking tapes shall be applied over the conductor, suitable for continuous operating conductor temperature of 90 deg C. g) All detailed constructional features shall be shown in the cross-sectional drawing.
2.1.2	**Conductor Screen**	Extruded semi-conducting material. (Also refer Cl. 2.1.3.) (Tapes are not acceptable)
2.1.3	**Insulation**	a) Extruded XLPE (Cross-Linked Poly-Ethylene) Insulation, with water-tree retardant (WTR) property b) The required compound used shall be from BSES-approved sub-vendors and not from any other (refer Annexure – C). c) Uniform thickness of insulation shall be within the permissible values as per IEC Standards; eccentricity check shall be carried out to ensure this. d) Insulation Color : natural
2.1.4	**Insulation Screen**	a) Freely-strippable semi-conducting screen, which should not require application of heat for its removal.

		(Refer Cl. 2.1.3.) b) Text "Do not Heat - Freely Strippable" to be printed on insulation screen (at every 600 mm interval). c) Round shape over the outer semi-con shall be within the permissible limits as per IEC standards; Ovality check shall be carried out to ensure this. d) Compound used shall be suitable for the operating temperature of the Cable and shall be compatible with the insulation used.
2.1.5	**XLPE Process**	
2.1.5.1	33 KV	Dry Cure and Dry Cooling process only.
2.1.5.2	Extrusion	The Conductor Screen, Insulation and Insulation Screen shall be extruded simultaneously, in a Single One-Time Process (i.e. as a triple-head extrusion) to ensure homogeneity of layers over the conductor, and absence of voids.
2.1.5.3	Make of Compounds for Insulation and Semi-conducting	Any deviation from Approved Makes mentioned in Annexure-C shall not be acceptable, unless the deviation has been specifically approved by BSES, prior to sourcing the compounds and taking up manufacturing of cable.
2.1.6	**Water-Swellable Tape**	a) Semi-Conducting Water-Sellable Tape shall be provided, under the copper tape, on each core. b) Nominal thickness : 0.3 mm c) Weight: 118 gm / sq. m apprx. d) Swell height: ≥ 12 mm in 1 min. e) Compatible to strippable / non-strippable semi-con, over which it is applied.
2.1.7	**Core Identification**	a) For 3-core cables, cores shall be identified by coloured strips (Red, Yellow, Blue), applied

		helically / longitudinally below the copper tape. The coloured strips shall carry the name of manufacturer permanently printed at 1 meter intervals; this is to provide additional identification of manufacturer of the cable.
2.1.8	**Copper Tape**	Copper Tape of minimum thickness 0.1 mm shall be applied helically over the layer formed after application of insulation screen, water-swellable tape and identification strip. Zero Negative tolerance in thickness of copper tape
2.1.9	**Filler**	a) All interstices, including center interstices shall be filled by PP filler. b) PP Filler shall be non-hygroscopic, not having any effect on other compounds used, stable at cable temperatures, etc. c) PVC filler is not acceptable. d) Filler is not applicable for single-core cables.
2.1.10	**Binder Tape**	As per manufacturer's standard
2.1.11	**Inner Sheath**	Extruded Inner Sheath of Black PVC type ST-2 (IS 5831)
2.1.12	**Armour**	a) For 3-core Cables : Galvanised Steel round wire armour b) Minimum area of coverage of armouring shall be 90 % (min.). At any time, the gap between any two adjacent armour wires shall not be more than the diameter of wire. c) Zero negative tolerance is for : • Diameter of armour wire

2.1.13	**Binder Tape**	Rubberised cotton tape
2.1.14	**Outer Sheath**	a) Extruded outer sheath of PVC (ST-2 as per IS 5831) with termite-repellant and anti-rodent properties. Color - Blue (Outer Sheath shall be FRLS-type, if chosen by purchaser.)
		b) Shape of the cable over the outer sheath shall be circular, when manufactured / completed. Regular Ovality check shall be carried out at factory, to detect any abnormality. Manufacturing quality shall be such that cable will retain its circular shape, even after it is laid at site.
		c) The Outer Sheath shall be embossed as well as laser printed with following minimum text at a interval of 1 mtr: 1. The voltage designation 2. Type of construction / cable code (e.g. A2XWY) 3. Manufacturer's Name and Trade-mark 4. Number of cores and nominal cross-sectional area of conductor 5. Name of buyer / purchaser, 6. Month & Year of manufacturing 7. IS reference, i.e. IS : 7098 8. Batch No. / Lot No. (For traceability purpose, in case of any, in case of any manufacturing defect or otherwise arising in the cable in future.) 9. Purchase Order Number & date 10. Word ' FRLSH ', in case the cable is of FRLSH type. Note: o Drum no and Progressive length marking

		shall be provided by Laser printing at every meter with proper contrast in colouring • Progressive (sequential) length marking of cable shall be at every meter, starting from zero for every drum
2.1.15	**Pulling-eye Assembly** and **Sealing-end Cap** (for Cables)	a) A cable pulling-eye assembly Drg. No. MISC/E/4-1131/1699 (see Annexure-F) shall be provided at the loose end (outer end) of the cable on each drum. Sealing material shall be filled in inside the spaces / gaps between the pulling-eye assembly and cable outer sheath. Further, a heat-shrinkable sleeve shall be provided over the pulling-eye assembly and outer sheath of cable. b) Other end (inner end) of the cable shall be sealed as per MISC/E/4-1131/1698 (see Annexure-E.) One PVC cap with Polyurethane compound shall be provided as primary sealing and heat-shrink end-cap shall form a secondary sealing over the PVC cap.
3.0.0	(This number not used.)	
4.0.0	**Testing & Inspection**	Tests shall be carried out in accordance with IS 7098 (Part-2).
	a) Type Tests	<u>1) To Qualify in Tender:</u> Cables must be of type tested quality. Type Test Reports shall be submitted for the type, size and voltage rating of cable offered in the bid. For participation in the tender Type Test report shall be submitted from CPRI/ERDA only and shall not be more than 5 years old from the date of tender. If the report is more than 5 years and

		but less than 10 years old than bidder to submit undertaking that there is no design changes from the Type test conducted. 2) Type Test Required After Award of PO: Type test on one cable drum of each type/rating from any lot shall be conducted at CPRI/ERDA on sample basis as per relevant IS/IEC. Sample shall be sealed by BSES during inspection of cable. This type test is applicable subject to BSES requirement and cost shall be borne by BSES.
	b) BSES QAP (Typical)	In general, all tests mentioned in the BSES QAP (Characteristics – Typical) mentioned in Annexure-G shall be included in the Routine Tests, Type Tests and Acceptance Tests stated above.
	c) Routine Tests	1. Measurement of Electrical Resistance 2. HV Test with power frequency AC voltage 3. PD test 4. "Strippability Test" at both the ends of cable for each drum, to check the freely-strippable property of the Insulation Screen (outer semi-con). 5. Impulse voltage test of one drum 6. Armour coverage measurement 7. Physical test-Dimensions of each and every layer and components. Test results from the above tests must appear in the documents forwarded by the vendor for Inspection call / waiver.
	d) Inspection	1. The Buyer reserves the right to witness all tests specified on completed cables. 2. The Buyer reserves the right to inspect cables at Sellers works at any time prior to dispatch, to verify compliance with the specifications. 3. In-process (stage inspection) and final

		inspection call intimation shall be given sufficiently in advance to the purchaser. 4. Minimum lot size of Cables to be offered for inspection shall be mutually agreed between Purchaser and Vendor, before placing the order. Vendor shall raise inspection call only after a minimum lot size is ready and with due factory routine tests already carried out.
	e) Acceptance Tests	Acceptance Tests shall be conducted as per Cl. 18.2 of IS 7098 (Part-2) and the approved Quality Assurance Plan (QAP) in each lot of cables. Following tests shall also be carried out during the Acceptance Tests : a) "Wafer Boil Test" for checking integrity of semi-conducting layers. b) "Void-and-contamination Test" for the Insulation c) "Strippability Test" at both the ends of cable for each drum, to check freely-strippable property of the Insulation Screen (outer semi-con). d) "Water Penetration Test (WPT)", as per applicable IEC standards, to check adequacy of water-blocking arrangement provided inside the conductor. e) Heating cycle test along with potential shall be applicable on sample basis once in a PO. Jointing and Termination kits required for this test shall be in the scope of bidder. f) Impulse voltage test Internal type test shall be carried out once against each tender, on sample basis at manufacturer lab.
	f) Test Certificates (TC)	Three sets of complete Test Certificates (Routine tests and Acceptance tests) shall be submitted along with the delivery of cables. Soft copy of the TCs shall be separately e-mailed to

		the Purchaser. **Note :** Make/grades of critical materials (such as, for conductor screen, insulation, insulation screen, etc.), actually used during manufacturing of cables for order-on-hand, shall be clearly stated in the TCs forwarded by the Manufacturer, enabling references in future.
5.0.0	**Drawing, Data and Manuals**	a) Refer Annexure-A regarding Document Submission. b) Cross-Sectional Drawing shall show every feature of construction, including the thickness / diameter over every layer. This drawing shall also state the text to be embossed over the outer sheath - i.e. type/size, etc. of the cable, drum no./lot no., sequential marking over every meter, printing text on outer semi-con ("Do Not Heat-Freely Strippable"), font sizes to be used, additional text, if any, etc. Also, drum details, markings to be made on both sides of the drum, and so on.
5.0.1	Documents to be submitted along with bid	The vendor shall submit : a) Cross-sectional drawing b) GTP (all data to appear) c) Type Test certificates d) Dimensional drawing for pulling eye e) Fault Level Calculation for armour and copper tape screen f) Complete Cable Catalogue and Manual g) Armour Coverage Calculation
5.0.2	Documents after award of contract	Within 15 days, the seller has to submit four sets of above-mentioned drawings, along with one soft copy

		for buyer's approval.
5.0.3	Final As-Built Drawings	One soft copy of all documents, including type & routine test certificates.
6.0.0	**Drum length & tolerance**	Cable length per drum
6.0.1	a) 33 KV, Three core	a) 300 mtr +/- 5 %
6.0.2	Overall tolerance	- 2 % for the total cable length for the entire order.
6.0.3	Short length of cables	Manufacturer shall take prior approval from Purchaser for any supply of short length cables. For 33 KV, cables, minimum acceptable short length cable can be 150 meter In any case, manufacturer shall not put two cable pieces of different short lengths in same cable drum.
7.0.0	**Packing, Shipping, Handling & Storage**	
	a) Packing	1. Both the ends of the cables shall be properly sealed to prevent any deterioration of the cable, due to ingress of water, etc. 2. Cable inner end (starting end) shall project, outside the completely wound cable, by sufficient length enabling verify cable details, including the initial length marking. 3. Similarly, outer end of the cable shall be saddled / secured to the drum properly to prevent any external damage to the end at any time. 4. Before putting on wooden planks, protective covers (thick plastic sheets, etc.) shall be secured over the wound cable, to avoid any abrasion by wooden planks, over the outer sheath of the cable. Alternatively PP sheets can

		be put as protective covers. 5. After providing the protective covers, the cable drums shall be finally closed by wooden planks (with saddles), without leaving any gaps between the planks; i.e. 100 % covering shall be ensured.
	b) Drum Identification Markings:	Direct marking (i.e. text painting through stencils, etc.) shall be done on the drums, instead of attaching labels, which may be misplaced/lost over a period of time. 1. Drum identification number 2. Cable voltage grade 3. Cable code (e.g. A2XWY, etc.) 4. Number of cores and cross sectional area 5. Cable quantity, i.e. cable length (metre) 6. Purchase order number & date 7. SAP item code 8. Total weight of cable and drum (kg) 9. Manufacturer's Name 10. Buyer's name 11. Month & Year of Manufacturing 12. Direction of rotation of drum 13. Cable length final end-markings (i.e., reading at the inner end and reading at the outer end, just before packing, shall be marked on the drum.)
	c) Shipping information	The seller shall give complete shipping information concerning the weight, size of each package
	d) Transit damage	The seller shall be responsible for any transit damage due to improper packing.
	e) Type of Drum	Non Returnable Steel drums, as per relevant IS / IEC. (Steel drums shall be with M.S. spindle plate with nut-bolts)
	f) Cable Drum handling	The drums shall be with M.S. spindle plate (with nut-

		bolts) of adequate size to suit the spindle rods, normally required for handling the drums, according to expected weight of the cable drums.
8.0.0	**Quality Assurance Plan (QAP)**	
8.0.1	Vendor's QAP	Manufacturer shall submit QAP in line with BSES QAP format (Annexure-G) for purchaser's approval.
8.0.2	Inspection Points	To be mutually identified and agreed upon in QAP.
9.0.0	**Progress Reporting**	
9.0.1	Outline Document	To be submitted for purchaser's approval for outline of programmes for production, stage-inspection, testing, final inspection, packing, dispatch and documentation.
9.0.2	Detailed Progress Report	To be submitted to Purchaser once a month containing: i) Progress on material procurement ii) Progress on fabrication (as applicable) iii) Progress on assembly (as applicable) iv) Progress on internal stage-inspection v) Reason for any delay in total programme vi) Details of test failures, if any, during manufacturing stages. vii) Progress on final box-up Constraints / Forward Path
10.0.0	**Deviation**	a) Deviations from this specification are only acceptable, where the Seller has listed in his quotation the requirements he cannot, or does not, wish to comply with, and the Buyer has accepted, in writing, the deviations before the order is placed. b) In the absence of any list of deviation, it will be

		assumed by the Buyer that the Seller complies fully with this specification. c) Any deviations mentioned in any other submitted bid documents (i.e.in filled GTP, Catalog, BSES old approval, buyer's/seller's standards etc) by seller without separate deviation sheets with BSES acceptance, will not be considered as a deviation from this tech spec at any stage of contract.

Annexure – A

Scope, Documentation and Delivery schedule

Document/Drawing submission shall be as per the matrix given below:

a. All documents/drawings shall be provided in soft copy only in returnable Pen drives
b. Language of the documents shall be English only.
c. Incomplete submission shall be liable for rejection.
d. Document check sheet compliance shall be the first sheet for each submission stage i.e. Technical bid, Drawing Approval, Pre Dispatch, Pre closure
e. No submission is acceptable without check list compliance.
f. Deficient/ improper document/ drawing submission shall be liable for rejection.
g. Order of documents shall be strictly as per the check list.
h. Any document not included in the below table but necessary for detailed engineering shall be deemed to be included in bidder's scope

S.No.	Detail of Document	For Tender	For Approval/Review	Final Submission
1	Guaranteed Technical Particulars (GTP)	Required	Required	Required
2	Deviation Sheet, if any	Required	Required	Required
3	Detailed cross sectional drawing of cable and drum	Required	Required	Required
4	Installation Instructions		Required	Required
5	Manual/Catalogue	Required	Required	Required
6	Cable de-rating factors		Required	Required
7	Type test reports of offered type and rating of cable	Required	Required	Required
8	BIS certificate	Required		
9	Make of Raw Materials	Required	Required	Required
10	Inspection and test reports, carried out in manufacturer's works			Required
11	Routine Test Certificates			Required
12	Test certificates of all the raw materials			Required

Annexure - B

GUARANTEED TECHNICAL PARTICULARS
(GTP)

Note:

1) For every type / size of cable, every data shall be mentioned.
2) Seller may submit separate GTP for every type / size of cable, as suitable.
3) GTP requirements are generally as per IS : 7098 (Part-II).
4) GTP shall be read in line with purchaser's Project Site Specific Requirement.

Sr. No.	Description	Buyer's requirement	Unit	Seller's Data
1.0	Purchase Req. No.	-		
2.0	Guarantee Period (Min.)	60 Months (from date of commissioning) / 66 Months (from date of receipt at purchaser's store) whichever is earlier		
3.0	Applicable IS / IEC Standard followed by vendor	IS 7098 Part-2 / IEC 60502-2		
4.0	Make	-		
5.0	**Type**			
	a) 33 kV, 3c x 400 sq. mm.	A2XWY		
6.0	**Voltage Grade**			
	a) 33 kV, 3c	19 / 33	kV	
7.0	Maximum Conductor temperature			
A	Continuous	90	deg. C	
B	Short time	250	deg. C	
8.0	**Conductor**			
A	Material and Grade	As per Cl. 2.1.1		
B	Size	As shown under 5.0 above		
C	Wires in each conductor	As per Table 2 of IS 8130	Nos.	
D	Conductor Shape	As per Cl. 2.1.1		

Technical Specification for 33 kV 3Cx400 sq mm cable

E	Dia. of wires in each conductor before compaction	Manufacturer Standard	mm	
F	Diameter over conductor		mm	
G	Maximum Conductor resistance at 20 ° C			
	c) 33 kV, 3c x 400 sq. mm.	0.0778	ohm/km	
H	Longitudinal Water Blocking Arrangement within conductor	Is it provided and shown in the cross-sectional drawing? (Yes / No)		
I	Semiconducting water blocking tape over conductor	Yes/No		
J	Short circuit current-carrying capacity of conductor		kA for 1 sec.	
9.0	**Conductor Screen** (inner semi-con)			
A	Material & type	As per Cl. 2.1.2		
B	Thickness (min)	0.50	mm	
C	Diameter over conductor screen		mm	
D	Make and grade of semi-conducting compound			
10.0	**Insulation**			
A	Insulation Material	As per Cl. 2.1.3		
B	Nominal thickness			
	33 kV, 3c	8.8	mm	
C	Minimum thickness			
	b) 33 kV, 3c	7.82	mm	
D	Diameter over Insulation (Approx.)		mm	
E	Make and grade of Insulation compound			
F	Eccentricity	As per IEC standards	%	
G	Water-tree retardant property	Required		
11A.	**Insulation Screen** (outer semi-con)			
a.	i) Thickness of freely strippable Semi conducting screen	0.50	mm	
	ii) Make and grade of semi-conducting compound			
	iii) Printing	As per Cl. No. 2.1.4 (Yes / No)		
	iv) Ovality of the core	As per IEC Standards	%	

Technical Specification for 33 kV 3Cx400 sq mm cable

b.	Diameter over Insulation Screen (apprx.)		mm	
11B.	**Water-Swellable Tape** (if required by Purchaser)			
	a) Thickness b) Weight c) Swell height d) Compatible to strippable / non-strippable semi-con, over which it is applied. e) Make & Grade f) Pre-slitted packed tapes from sub-vendors approved by BSES	a) 0.3 mm b) 118 gm / sq. m c) ≥ 12 mm in 1 min. d) Yes / No e) Pl. state f) Yes / No		
11C.	**Cable Core identification** a) By coloured strips over cores applied helically / longitudinally b) Manufacturer's name shall be permanently printed on the strips, at close intervals.			
11D.	**Copper Tape**			
	i) Dimensions	a) Thickness : 0.1 +/- 5 % b) Width : 50 mm C) Overlap: 20% d) No Negative tolerance on thickness of copper tape	Mm	
	ii) Fault current-carrying capacity of copper tape	Manufacturer's Standard (Calculation sheet shall be attached)	… kA for … sec.	
11E.	Diameter over laid up core (apprx.)		mm	
12.0	**Filler** (Material and type)	As per Cl. 2.1.9 (Specify no. & size of filler at center & core interstices)		

Technical Specification for 33 kV 3Cx400 sq mm cable

	a) 33 kV, 3c x 400 sq. mm.			
12A.0	**Binder Tape**	over laid-up cores		
13.0	**Inner Sheath**			
A	Material and type	As per Cl. 2.1.11		
B	Minimum thickness			
	a) 33 kV, 3c x 400 sq. mm.	0.7	mm	
C	Approx. dia. over inner sheath		mm	
14.0	**Armour**			
A	Material			
	33 kV, 3Cx400	G. I. Round wire	No.	
B	Armour – GI round wire a) Minimum Dia of wire b) Number of wire (min.)	 a) 4.00 (zero negative tolerance) b) As per manufacturer calulation	 mm nos.	
C	Approx. Equivalent Area		sq. mm.	
D	Area covered by armour	Min. 90 % Calculation shall be attached.	%	
E	Dia. over armour - apprx.		Mm	
F	Fault current carrying capacity of armour	Calculation sheet shall be attached.	… kA for … sec.	
15.0	**Outer Sheath**			
A	Material and type	As per Cl. 2.1.14		
B	Thickness (min.)	** As per Table-5 of IS 7098 Part-2		
	a) 33 kV, 3c x 400 sq. mm.	**	mm	
C	Color	Blue		
D	Embossing (details as per Cl. 2.1.14)	Yes / No		
E	FRLS Properties	As per customer's requirement		
16.0	Approx. overall diameter		mm	
17.0	Standard drum length with tolerance			
	a) 33 kV, 3c x 400 sq. mm.	300 +/- 5%	meters	
17A	Overall order tolerance	- 2 % for the total		

		cable length for the entire order.		
18.0	**Cable Drum**			
a.	Type of drum	Steel (Specify the relevant IS / IEC followed for drum design)		
b.	Markings on the drum (as per Cl. 7.0.0)	On both faces		
18A.0	**Cross-Sectional Drawing** (ref. Cl. 5.0.0)	Is drawing submitted, showing every feature of constructions? (Yes / No)		
19.0	**a. Sealing-end Cap (provided at both ends)**	Yes/No Is manufacturer's / Sub-Vendor's drawing submitted? (Yes / No)		
	b. Cable pulling eye at one end and Sealing end cap at other end	Yes/No Is manufacturer's / Sub-Vendor's drawing submitted? (Yes / No)		
20.0	**Weights**			
	a) Net weight of cable (apprx.)		kg / km	
	b) Weight of empty drum	300 mtr	Kg	
	c) Weight of Cable with drum	300 mtr	kg	
	d)Drum size	300 mtr	mm	
	e)Drawing of Drum	Required	--	
21.0	Continuous current rating for standard I. S. condition laid Direct			
	a) In ground 30° C		Amp	
	b) In duct 30° C		Amp	
	c) In air 40° C		Amp	
22.0	(not used)			
23.0	Electrical Parameters at Maximum Operating temperature:			
A	AC Resistance		ohm / km	
B	Reactance at 50 c/s		ohm / km	
C	Impedance		ohm / km	
D	Zero sequence impedance		ohm / km	
E	Positive sequence		ohm / km	

Technical Specification for 33 kV 3Cx400 sq mm cable

	impedance			
F	Negative sequence impedance		ohm / km	
G	Capacitance		micro-farad / km	
H	Conductance		Amperes per volts	
I	Inductive susceptance		mho	
J	Capacitive susceptance		ohms	
24.0	Recommended minimum bending radius	15 x O. D.	mm	
25.0	De-rating factor for following Ambient Temperatures :	Ground / Air		
	a) At 30° C			
	b) At 35° C			
	c) At 40° C			
	d) At 45° C			
	e) At 50° C			
26.0	Group factor for following numbers of cables laid :	Touching Trefoil		
	a) 3 Nos.			
	b) 4 Nos.			
	c) 5 Nos.			
	d) 6 Nos.			
27.0	Recommended pressure for laying cable using power winch	30 N / mm2	N / sq. mm.	
28.0	Process of Cross-linking of Polyethylene			
	a) 33 kV, 3c x400	Dry Cure and Dry Cooling process only		
29.0	**Type test** (TTR - Type Test Report)	Is copy of latest valid TTR for respective sizes enclosed? (Yes / No)		
30.0	**Quality Assurance Plan** (QAP)	Is QAP Format (Annexure-F), duly filled in and enclosed? (Yes / No)		

31.0	**List of Sub-Vendors** for construction items (Annexure-C)	Is this list enclosed for BSES approval? (Yes / No)		

Annexure - C

List of Sub-Vendors

for critical items

Vendor to state sub-vendors' names for other items, wherever approved names are not mentioned, for purchaser's approval during pre-order / post-order stages.

Ser. No.	Raw Materials		Name of the Suppliers
1.	XLPE Compound	1	Dow Chemicals , U.S.A.
		2	Borealis , Sweden
		3	Hanwha , South Korea
2.	Semi-Conducting Compound	1	Dow Chemicals, U.S.A.
		2	Borealis , Sweden
		3	Hanwha , South Korea
3.	Conductor Water-Blocking tapes / yarn / powder	1	Lantor
		2	Geca
		3	Miracle
		4	Scapa
		5	Sneham International
4.	Water-Swellable Tapes (Pre-slitted)	1	Lantor
		2	Geca
		3	Miracle
		4	Scapa
		5	Sneham International
5.	Aluminium Rod	1	Bharat Aluminium Co. Ltd. (BALCO)
		2	Hindustan Aluminium Co. Ltd. (HINDALCO)
		3	National Aluminium Co. Ltd. (NALCO)
		4	Vedanta (Sesa Sterlite)

6.	Copper Tape	1	Aggarwal Metal
		2	Indian Smelting
		3	Luvata Swedan
		4	Outokumpu Copper Strip AB, Swedan
7	Galvanized Steel Wires / Strips	1	Tata
		2	Balaji
		3	Systematic
		4	Mica Wires Pvt Ltd.
		5	Bansal Industries
8	PVC Compound	1	Kalpana
		2	Universal
		3	SCJ Plastic
		4	Sriram Polytech
		5	Shri Ram Vinyl, Kota
9	P. P. Fillers	1	Vijoy Polymers
		2	Yash Polymers
		3	AVSL Industries
10	Core Identification Tape	1	AVSL Industries
		2	Yash Polymer
		3	Vijoy Polymers
11	PE Compound	1	Borealis
		2	Shakun
		3	Kalpana

Annexure - D

Service Conditions

(Atmospheric / Soil conditions at Site)

A.	**Delhi**	
a)	Average grade atmospheric condition	Heavily polluted, dry
b)	Average grade soil condition	
c)	Maximum altitude above sea level	1000 M
d)	Air temperature Ambient	i) Highest : 50 deg C ii) Average : 40 deg C iii) Minimum : 0 deg C
e)	Relative Humidity	100 % max
f)	Thermal Resistivity of Soil	150 deg. C . cm / W max.
g)	Seismic Zone	4
h)	Rainfall	750 mm concentrated in four months

ANNEXURE E

DIMENSIONS

SIZE	A EXP.(Min.)	A REC.(Max)	B EXP.(Min.)	C EXP.(Min.)	D EXP.(Min.)	LC %	T (WALL REC. ± 20 %)
EC 120/150	75	34	120	105	50	± 10	4.2
EC 240/300	100	62	130	110	70	± 10	3.5
EC 400	145	75	155	120	70	± 10	4.6

EXP - Expanded (as supplied), REC - Recovered freely, LC - Longitudinal Change,T - Wall Thickness, EC - End Cap

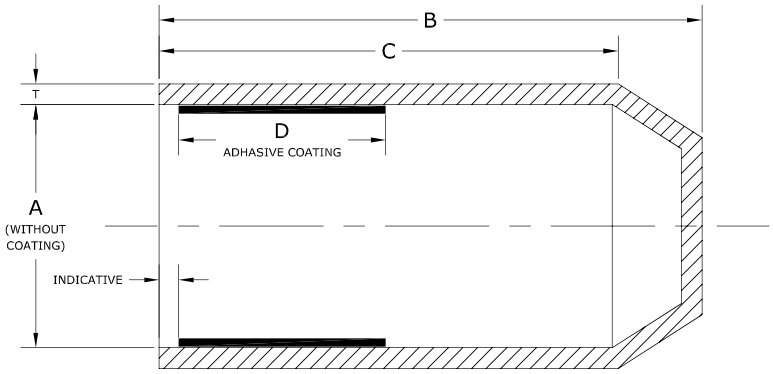

END CAP
(AS SUPPLIED)
SECTIONAL VIEW

MATERIAL SPECIFICATIONS

	Characteristics	Test Class	Value	Test Method
A	**Physical Properties**			
1	Specific Gravity	Type	1.05 ± 0.2	ASTM D-1505
2	Water Absorption	Type	1 % (max)	ASTM D-570 / ISO 62
3	Tensile Strength	Routine	10 N /sqmm (min)	ASTM D-412 / ISO 37
4	Ultimate Elongation	Routine	300% (min)	ASTM D-412 / ISO 37
5	Hardness	Type	45 shore D ± 3	ASTM D-2240
6	**Thermal Test**			
B	Thermal Ageing (120°C for 500 hrs)			
1	Tensile Strength	Type	8 N/sqmm (min)	ASTM D-412 / ISO 37
2	Ultimate Elongation	Type	200% (min)	ASTM D-412 / ISO 37
C	**Electrical Properties**			
1	Volume Resistivity	Type	10^{12} ohm-cm. (min)	ASTM D-257 / IEC 93
2	Dielectrical Strength	Type	10 kV/mm. (min)	ASTM D-149 / IEC 243
3	Dielectric Constant	Type	5 (max)	ASTM D-150 / IEC 250

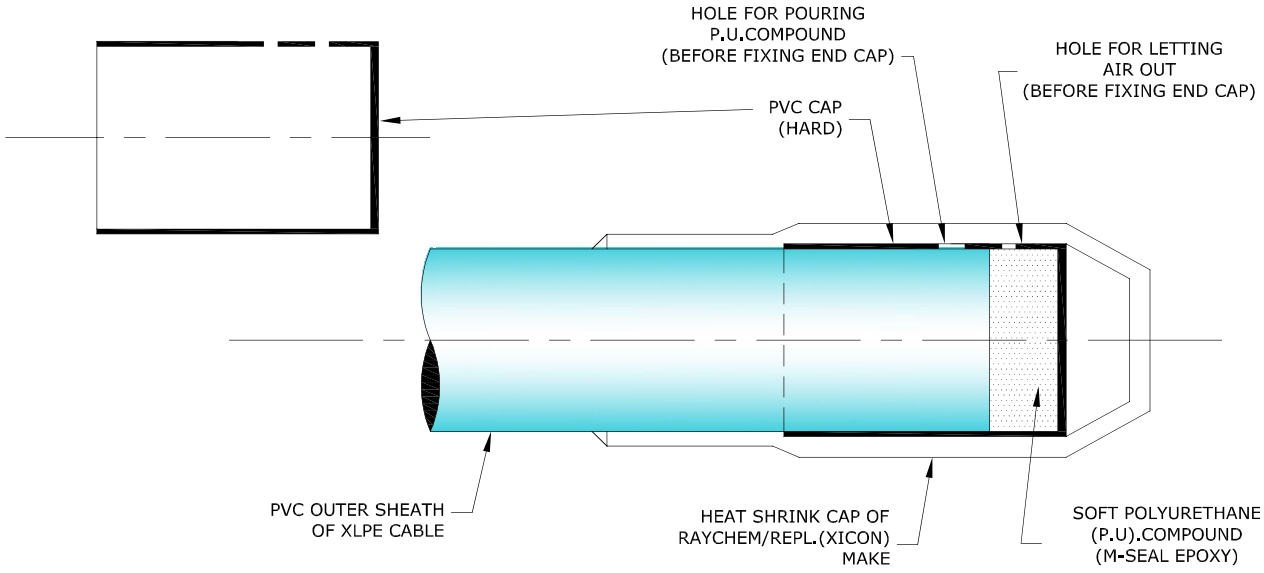

END CAP
(AFTER HEAT SHRINKING OVER THE CABLE END)

Note : 1) All dimension in mm
2) Colour Black
3) Size as mentioned in the table shall be stencilled on respective item

BSES

DRAWING No. MISC/E/4-1131/1698

SCALE :NOT TO SCALE | DATE: 09-05-2011

END SEALING CAP
(FOR XLPE CABLE)

DRAWN BY:	CHECKED BY:	APPROVED BY:

REVISIONS

Addl V.P.

ANNEXURE F

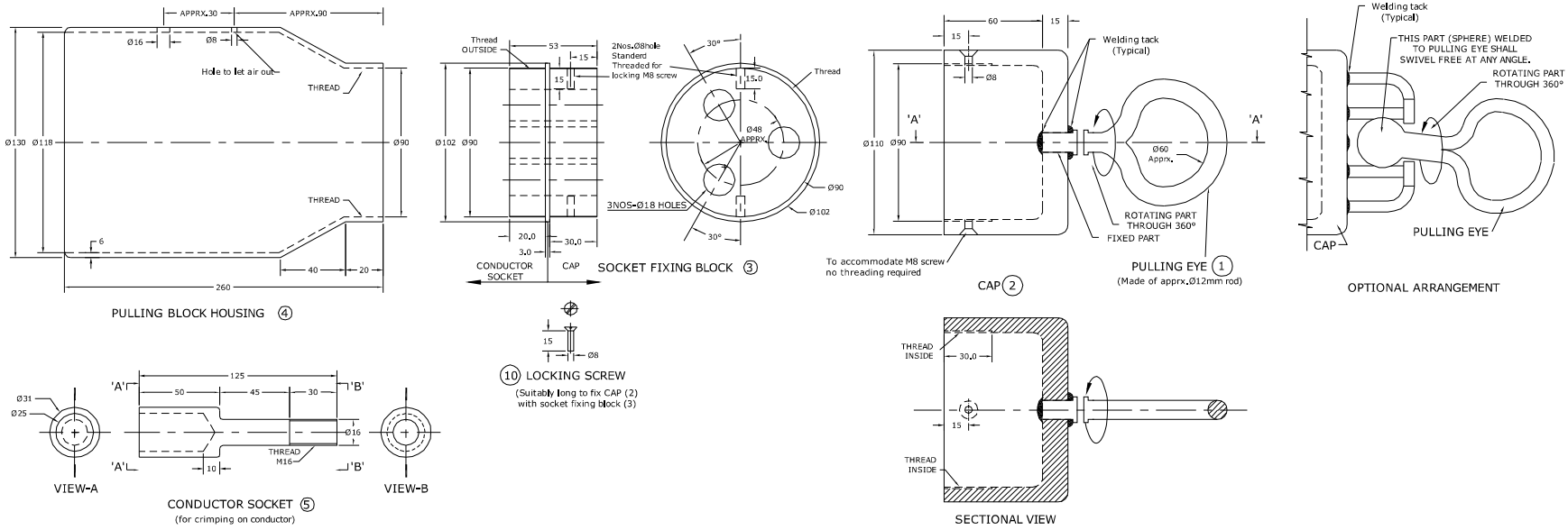

Exploded View

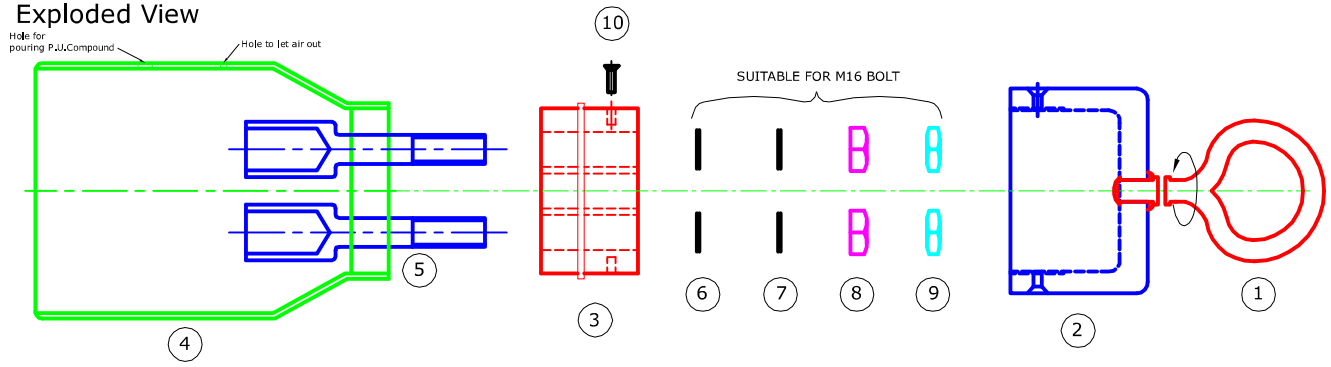

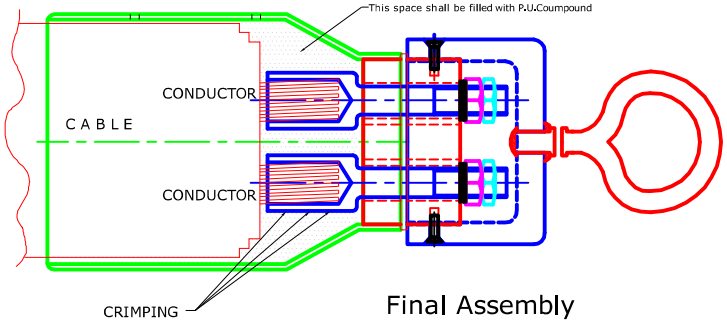

Final Assembly

EXAMPLE:
1) For cable size 33kV, 3/C X 400sq mm Al XLPE.
2) Diameter over conductor : 23.8mm apprx.
   Overall diameter : 108±3mm apprx.
   Pulling force applicable on the cable : 30 N/sq mm
   Pulling eye shall withstand total force of : 36000N+Safety margin

NOTE:
1) All Dimensions are in mm, unless otherwise stated.
2) This drawing is typical / indicative.Separate dimensioned drawing for cable pulling eye assembly, suitable for required size & rating of cables, shall be submitted for approval,prior to manufacturing.
3) After fixing cable pulling eye, P.U.(Poly-Urethane) Compound shall be poured to occupy inner spaces to avoid ingress of Water / Moisture.
4) After P.U.Compound oozes/flows out from the cable side,the same edge shall be sealed with suitable sleeve/Tape.

NO.	DISCRIPTION	QTY.	MATERIAL
10	LOCKING SCREW	2	M.S.Zinc-Plated
9	LOCK NUT	3	M.S.Zinc-Plated
8	NUT	3	M.S.Zinc-Plated
7	SPRING. WASHER	3	M.S.Zinc-Plated
6	PLAIN WASHER	3	M.S.Zinc-Plated
5	CONDUCTOR SOCKET	3	AL.
4	PULLING BLOCK HOUSING	1	M.S.Zinc-Plated
3	SOCKET FIXING BLOCK	1	M.S.Zinc-Plated
2	CAP	1	M.S.Zinc-Plated
1	PULLING EYE	1	M.S.Zinc-Plated

BSES

DRAWING No. MISC/E/4-1133/1699

SCALE :NOT TO SCALE | DATE: 09-05-2011

CABLE PULLING EYE ASSEMBLY (TYPICAL)

DRAWN BY: | CHECKED BY: | APPROVED BY:

REVISIONS

Addl V.P.

ANNEXURE G: QUALITY ASSURANCE PLAN (QAP)

FOR 33 & 66 kV EHV CABLES

S. NO.	COMPONENT & OPERATION	CHARACTERISTICS	CLASS	TYPE OF CHECK	QUANTUM OF CHECK	REFERENCE DOCUMENT	ACCEPTANCE NORMS	FORMAT OF RECORD	AGENCY			Remark
									SV	MFR	BSES	
1	2	3	4	5	6	7	8	9	10	11	12	13
	Legend : SV : Sub-Vendor of Cable Manufacturer, MFR : Cable Manufacturer, MPS : Material Purchase Specification,											
	P : Perform, W : Witness, V : Verification											
A	**RAW MATERIAL**											
1	Aluminium/Copper Rod	a) Tensile strength	Major	Physical	Sample	MPS	MPS	Reg./Sheet	P	P/V	V	
		b) Resistivity	Major	Electrical	Sample	MPS	MPS	Reg./Sheet	P	P/V	V	
		c) Diameter	Major	Physical	Sample	MPS	MPS	Reg./Sheet	P	P/V	V	
		d) Chemical composition	Major	Chemical	Sample	MPS	MPS	Test certificate	P	V	V	
		e) Surface finish	Major	Visual	Sample			-	P	P	_	
2	PVC Compound	a) Tensile Strength	Major	Physical	Sample	MPS	MPS	Reg./Sheet	P	P/V	V	
		b) Elongation at break	Major	Physical	Sample	MPS	MPS	Reg./Sheet	P	P/V	V	
		c) Thermal stability	Major	Physical	Sample	MPS	MPS	Reg./Sheet	P	P/V	V	
3	**TR-XLPE** Compound (Borealis/Dow chemical/ Hanwa)	a) Packing	Minor	Visual	100%	MPS	MPS	-	P	V	-	
		b) Tensile Strength	Major	Physical	Sample	MPS	MPS	Reg./Sheet	P	P/V	V	
		c) Elongation at break	Major	Physical	Sample	MPS	MPS	Reg./Sheet	P	P/V	V	
		d) Hot set test	Major	Physical	Sample	MPS	MPS	Reg./Sheet	P	P/V	V	
		e) Volume Resistivity	Major	Electrical	Sample	MPS	MPS	Reg./Sheet	P	P/V	V	
		f) Cure Curve (Max. Torque)	Major	Physical	Sample	MPS	MPS	Reg./Sheet	-	P	V	
		g) Density	Major	Physical	Sample	MPS	MPS	Reg./Sheet	P	P/V	V	
4	Semi-conducting Compound (Borealis/Dow chemical/ Hanwa)	a) Packing	Minor	Visual	100%	MPS	MPS	-	P	V	-	
		b) Volume Resistivity	Major	Electrical	Sample	MPS	MPS	Reg./Sheet	P	P/V	V	
		c) Tensile Strength	Major	Physical	Sample	MPS	MPS	Reg./Sheet	P	P/V	V	
		d) Elongation at break	Major	Physical	Sample	MPS	MPS	Reg./Sheet	P	P/V	V	
		e) Cure Curve (Max. Torque)	Major	Physical	Sample	MPS	MPS	Reg./Sheet	-	P	V	
		f) Density	Major	Physical	Sample	MPS	MPS	Reg./Sheet	P	P/V	V	
5	Copper tape	a) Thickness & width	Major	Physical	Sample	MPS	MPS	Reg./Sheet	P	P/V	V	
		b) Tensile Strength	Major	Physical	Sample	MPS	MPS	Reg./Sheet	P	P/V	V	
		c) Elongation at break	Major	Physical	Sample	MPS	MPS	Reg./Sheet	P	P/V	V	
		d) Resistivity	Major	Electrical	Sample	MPS	MPS	Reg./Sheet	P	P/V	V	
6.	Armour wires/strips (Galvanised steel)	a) Dimensions	Major	Physical	Sample	MPS	MPS	Reg./Sheet	P	P/V	V	
		b) Surface condition/finish	Major	Visual	Sample	MPS	MPS	Reg./Sheet	P	P/V	V	
		c) Tensile Strength	Major	Physical	Sample	MPS	MPS	Reg./Sheet	P	P/V	V	
		d) Elongation at break	Major	Physical	Sample	MPS	MPS	Reg./Sheet	P	P/V	V	
		e) Torsion test for round wire	Major	Physical	Sample	MPS	MPS	Reg./Sheet	P	P/V	V	
		f) Wrapping test	Major	Physical	Sample	MPS	MPS	Reg./Sheet	P	P/V	V	
		g) Mass of zinc coating	Major	Physical	Sample	MPS	MPS	Reg./Sheet	P	P/V	V	
		h) Uniformity of zinc coating	Major	Physical	Sample	MPS	MPS	Reg./Sheet	P	P/V	V	
		i) Adhesion test	Major	Physical	Sample	MPS	MPS	Reg./Sheet	P	P/V	V	
		j) Resistivity test	Major	Electrical	Sample	MPS	MPS	Reg./Sheet	P	P/V	V	
7	Water Swellable	a) Dimensions	Minor	Physical	Sample	MPS	MPS	Reg./Sheet	P	P/V	V	

BSES

ANNEXURE G: QUALITY ASSURANCE PLAN (QAP)

FOR 33 & 66 kV EHV CABLES

S. NO.	COMPONENT & OPERATION	CHARACTERISTICS	CLASS	TYPE OF CHECK	QUANTUM OF CHECK	REFERENCE DOCUMENT	ACCEPTANCE NORMS	FORMAT OF RECORD	AGENCY			Remark
									SV	MFR	BSES	
1	2	3	4	5	6	7	8	9	10	11	12	13
	Legend : SV : Sub-Vendor of Cable Manufacturer, MFR : Cable Manufacturer, MPS : Material Purchase Specification,											
	P : Perform, W : Witness, V : Verification											
	tape	b) Swelling height	Major	Physical	Sample	MPS	MPS	Reg./Sheet	P	P/V	V	
		c) Resistivity	Major	Electrical	Sample	MPS	MPS	Reg./Sheet	P	P/V	V	
		d) Weight	Major	Physical	Sample	MPS	MPS	Reg./Sheet	P	P/V	V	
8	Steel Drum	a) Dimension	Major	Meas.	1 sample per size	IS 10418 / Purchase order		-	P	P	-	
		b) Finish & workman ship	Minor	Visual	1 sample per size	Compliance to standard Engineering norms & free from surface defects		-	P	P	-	
9	Binder tape	a) Dimensions & material	Minor	Physical	Sample	MPS	MPS	-	P	P	-	
10	Polypropylene filler	a) Size	Minor	Physical	Sample	Purchase order	Purchase order	-	P	P	-	
11	Heat shrinkable end cap	a) Bore diameter	Major	Physical	1 sample per size	--	--	-	-	P	-	
		b) Length of end cap	Minor	Physical	1 sample per size	--	--	-	-	P	-	
B	**PROCESS INSPECTION**											
1	Wire Drawing	a) Diameter	Major	Physical	Sample			Reg./Sheet	-	P	V	
		b) Surface finish	Major	Visual	100 %	Smooth & free from defects		--	-	P	-	
		c) Tensile test (for Al)	Major	Physical	Sample	IS: 8130/84	IS: 8130/84	Reg./Sheet	-	P	V	
		d) Elongation test (for Cu)	Major	Physical	Sample	IS: 8130/84	IS: 8130/84	Reg./Sheet	-	-	V	
		e) Wrapping test (for Al)	Major	Physical	Sample	IS: 8130/84	IS: 8130/84	Reg./Sheet	-	P	V	
2	Stranding	a) No. of wires/strands	Major	Physical	At the time of m/c setting			Reg./Sheet	-	P	V	
		b) Lay length & Lay direction	Major	Physical	-do-			-	-	P	V	
		c) Dia of conductor	Major	Physical	During setting & once in each shift			Reg./Sheet	-	P	V	
		d) Surface finish	Major	Visual	100 %	No surface defects and free from sharp edges, scratches, grease, oil etc.		-	-	P	-	
3	Core extrusion (Conductor screen, Insulation & insulation screen)	a) Compound Make/Grade	Major	Visual	During m/c setting			-	-	P	-	Insulation screen shall be freely strippable, without application of heat.
		b) Thickness of insulation & extruded S.C. layers	Major	Physical	During m/c setting after stabilisation	Tech. Data Sheet / IS 7098/II/2011	Tech. Data Sheet / IS 7098/II/2011	Reg./Sheet	-	P	V	
		c) Surface finish	Minor	Visual	100 %	Smooth & free from defects		-	-	P	-	
		d) Printing on outer semi- conducting layer	Major	Visual	100 %	"DO NOT HEAT, FREELY STRIPPABLE"		-	-	P	-	
		e) Tensile Strength	Major	Physical	Sample	IS 7098/II/2011	IS 7098/II/2011	Reg./Sheet	-	P	V	
		f) Elongation at break	Major	Physical	Sample	IS 7098/II/2011	IS 7098/II/2011	Reg./Sheet	-	P	V	
		g) Hot set test	Major	Physical	Sample	IS 7098/II/2011	IS 7098/II/2011	Reg./Sheet	-	P	V	
		g1) Ovality of core	Minor	Physical	Sample	Tech. Data Sheet	Tech. Data Sheet	Reg./Sheet	-	P	V	

BSES

ANNEXURE G: QUALITY ASSURANCE PLAN (QAP)

FOR 33 & 66 kV EHV CABLES

S. NO.	COMPONENT & OPERATION	CHARACTERISTICS	CLASS	TYPE OF CHECK	QUANTUM OF CHECK	REFERENCE DOCUMENT	ACCEPTANCE NORMS	FORMAT OF RECORD	AGENCY			Remark
									SV	MFR	BSES	
1	2	3	4	5	6	7	8	9	10	11	12	13
	Legend : SV : Sub-Vendor of Cable Manufacturer, MFR : Cable Manufacturer, MPS : Material Purchase Specification,											
	P : Perform, W : Witness, V : Verification											
		h) Eccentricity of insulation	Minor	Physical	Sample	Tech. Data Sheet	Tech. Data Sheet	Reg./Sheet	-	P	V	
		i) Core diameter	Minor	Physical	Sample	Tech. Data Sheet	Tech. Data Sheet	Reg./Sheet	-	P	V	
		j) Void & contamination test for insulation (Silicon Oil test)	Major	Physical	Sample			-	-	P	V	
		k) Wafer boil test for extruded semi-conducting layers	Major	Physical	1 sample/lot	BIS draft Specn	BIS draft Specn	Reg./Sheet	-	P	V	
4	Taping - water Swellable semi-conducting	a) Dimensions	Minor	Physical	Sample	Tech. Data Sheet	Tech. Data Sheet	-	-	P	-	
		b) Tape Application (Overlap)	Minor	Visual	During m/c setting	Suitable overlap	Suitable overlap	-	-	P	-	
5	Taping - Copper tape	a) Width & Thickness of tape	Major	Physical	During m/c setting	Tech. Data Sheet	Tech. Data Sheet	Reg./Sheet	-	P	V	
		b) Number of tapes	Major	Visual	During m/c setting	Tech. Data Sheet	Tech. Data Sheet	Reg./Sheet	-	P	V	
		c) Tape application (Overlap)	Minor	Visual	During m/c setting	Tech. Data Sheet	Tech. Data Sheet	-	-	P	-	
6	Laying up	a) Identification of cores	Major	Visual	During m/c setting	Tech. Data Sheet	Tech. Data Sheet	-	-	P	-	Cores shall be laidup with PP fillers & suitable tape binder shall be provided over laid up assembly
		b) Direction of lay, core Sequence & Lay length	Major	Visual	During m/c setting	IS 7098/II/2011, PIL-W-02	IS 7098/II/2011, PIL-W-02	-	-	P	-	
		c) Application of binder tape	Minor	Visual	During m/c setting	Tech. Data Sheet		-	-	P	-	
		d) Shape of laid up assembly	Minor	Visual	100%	Reasonably circular	Reasonably circular	-	-	P	-	
7	Inner sheath	a) Material & type	Major	Visual	During m/c setting	Tech. Data Sheet	Tech. Data Sheet	-	-	P	-	
		b) Thickness	Major	Physical	During m/c setting & drum change	Tech. Data Sheet & IS 7098/II/2011	ech. Data Sheet & IS 7098/II/2011	Reg./Sheet	-	P	V	
		c) Surface finish	Minor	Visual	100 %	Surface shall be smooth & free from defects		-	-	P	-	
		d) Colour of inner sheath	Major	Visual	100 %	Tech. Data Sheet	Tech. Data Sheet	-	-	P	-	
8	Armouring	a) Dimension of armour wires/strips	Major	Physical	During m/c setting	Tech. Data Sheet	Tech. Data Sheet	Reg./Sheet	-	P	V	No negative tol. on strip thickness/wire diameter
		b) No. of armour strip/wire	Major	Counting	During m/c setting	Tech. Data Sheet	Tech. Data Sheet	Reg./Sheet	-	P	V	
		c) Armour coverage	Minor	Visual	During m/c setting	IS 7098/II/2011	IS 7098/II/2011	-	-	P	-	
		d) Direction of lay	Major	Visual	During m/c setting	IS 7098/II/2011	IS 7098/II/2011	-	-	P	-	
		e) Lay length/Gear setting	Minor	Visual	During m/c setting			-	-	P	-	
		f) Surface finish	Major	Visual	100 %	No cross over/over riding of wire/strip		-	-	P		
9	Outer sheath/Rewinding	a) Material & type	Major	Visual	During m/c setting	Tech. Data Sheet	Tech. Data Sheet	-	-	P	-	
		b) Anti rodent & termite additives	Major	Visual	Each loading			Reg./Sheet	-	P	V	

ANNEXURE G: QUALITY ASSURANCE PLAN (QAP)

FOR 33 & 66 kV EHV CABLES

S. NO.	COMPONENT & OPERATION	CHARACTERISTICS	CLASS	TYPE OF CHECK	QUANTUM OF CHECK	REFERENCE DOCUMENT	ACCEPTANCE NORMS	FORMAT OF RECORD	AGENCY			Remark
									SV	MFR	BSES	
1	2	3	4	5	6	7	8	9	10	11	12	13
	Legend : SV : Sub-Vendor of Cable Manufacturer, MFR : Cable Manufacturer, MPS : Material Purchase Specification,											
	P : Perform, W : Witness, V : Verification											
		b) Thickness	Major	Physical	Each length	Tech. Data Sheet	Tech. Data Sheet	Reg./Sheet	-	P	V	
		c) Overall diameter	Major	Physical	Each length	Tech. Data Sheet	Tech. Data Sheet	Reg./Sheet	-	P	V	
		d) Surface finish & colour of sheath	Major	Visual	100 %	Surface smooth & free from defects. Colour as per Tech. Data Sheet		-	-	P	-	
		e) Cable length verification	Major	Visual	Each length	Manufacturing Plan	Manufacturing Plan	-	-	P	-	
		f) Marking	Major	Visual	Each length	As per approved GTP/cross sectiona drawing		Reg./Sheet	-	P	V	
C	**FINAL INSPECTION**											
1	Routine tests	a) High Voltage	Critical	Electrical	100 %	IS 7098/II/2011	IS 7098/II/2011	Test Report	-	P	V	
		b) Conductor Resistance	Critical	Electrical	100 %	IS 8130/84	IS 8130/84	Test Report	-	P	V	
		c) Partial Discharge	Critical	Electrical	100 %	IS 7098/II/2011	IS 7098/II/2011	Test Report	-	P	V	
		d) Impulse	Critical	Electrical	One sample per lot			Test Report		P	V	
		e) Armour Coverage	Critical	Physical	One sample per lot			Test Report		P	V	
		f) Physiacal Dimensions	Critical	Physical	One sample per lot			Test Report		P	V	
		g) Freely Strippable insulation screen (Strippability Test)	Major	Physical	One sample per lot	Factory Standard	Factory Standard	Test Report	-	P	V	
2	Stage Inspection	Wire Drawing	Major	Visual	100 %	Tech. Data Sheet	IS/IEC	Test Report	-	P	W	Stage Inspection shall be conducted subject to BSES requirement
		Extrusion process	Major	Visual	100 %	Tech. Data Sheet	IS/IEC	Test Report	-	P	W	
		Raw maerial inspection at factory	Major	Physical	100 %	Tech. Data Sheet	IS/IEC	Test Report	-	P	W	
		Wrapping of Aluminium	Major	Physical	100 %	Tech. Data Sheet	IS/IEC	Test Report	-	P	W	
		Tensile test for Aluminium	Major	Physical	100 %	Tech. Data Sheet	IS/IEC	Test Report	-	P	W	
		a) Annealing test for copper	Major	Physical	Appendix A to IS 7098/II/2011, each lot sample basis	IS 8130/84	IS 8130/84	-	-	P	V	Verification of process records.
		b) Tensile test for aluminium	Major	Physical		IS 8130/84	IS 8130/84	-	-	P	V	
		c) Wrapping test for aluminium	Major	Physical		IS 8130/84	IS 8130/84	-	-	P	V	Tests N/A on finished conductor.
		d) Conductor resistance test	Major	Electrical	Appendix A to IS 7098/II/2011, each lot sample basis	IS 8130/84	IS 8130/84	Test Report	-	P	W	
		e) Test for thickness of insulation & sheath	Major	Physical		IS 7098/II/2011 & Tech. Data sheet	IS 7098/II/2011 & Tech. Data sheet	Test Report	-	P	W	
		f) Hot set test for insulation	Major	Physical		IS 7098/II/2011	IS 7098/II/2011	Test Report	-	P	W	

ANNEXURE G: QUALITY ASSURANCE PLAN (QAP)

FOR 33 & 66 kV EHV CABLES

S. NO.	COMPONENT & OPERATION	CHARACTERISTICS	CLASS	TYPE OF CHECK	QUANTUM OF CHECK	REFERENCE DOCUMENT	ACCEPTANCE NORMS	FORMAT OF RECORD	AGENCY			Remark
									SV	MFR	BSES	
1	2	3	4	5	6	7	8	9	10	11	12	13
	Legend : SV : Sub-Vendor of Cable Manufacturer, MFR : Cable Manufacturer, MPS : Material Purchase Specification,											
	P : Perform, W : Witness, V : Verification											
3	Acceptance tests	g) Tensile strength & Elongation at break of insulation & outer sheath	Major	Physical	Each Lot Sample Basis	IS 7098/II/2011 & IS 5831/84	IS 7098/II/2011 & IS 5831/84	Test Report	-	P	W	
		h) Partial discharge test	Critical	Electrical		IS 7098/II/2011	IS 7098/II/2011	Test Report	-	P	W	
		i) High voltage test	Critical	Electrical		IS 7098/II/2011	IS 7098/II/2011	Test Report	-	P	W	
		j) Insulation resistance (Volume resistivity) test	Major	Electrical		IS 7098/II/2011	IS 7098/II/2011	Test Report	-	P	W	
		k) Tests for dimension of armour wires/strips	Major	Physical		IS 3975, IS 10810 Pt. 36 & Tech. Data sheet		Test Report	-	P	W	
		l) Test for anti termite & anti rodent property of outer sheath	Major	Physical		Tech. Data Sheet	Tech. Data Sheet	Reg./Sheet	-	P	W	
		m) Rewinding of cable on drum	Major	Visual		To check cable appearance, drum appearance, cable winding, packing, embossing/printing/sequential marking		Reg./Sheet	-	P	W	
		n) Void & contamination test for insulation (Silicon Oil test)	Major	Physical				Reg./Sheet	-	P	W	
		o) Wafer boil test for extruded semi-conducting layers	Major	Physical				Reg./Sheet	-	P	W	
		p) Freely Strippable insulation screen	Major	Physical		Factory Standard	Factory Standard	Test Report	-	P	W	
		q) Water Penetration test (WPT) on core (i.e.Logitudinal Water Blocking Test)	Major	Physical		IEC:60502	IEC:60502	Test Report	-	P	W	**Test shall be conducted for leakage of water through conductor.**
		r) Armour coverage	Major	Physical		As per data sheet & FS	As per data sheet & FS	Test Report	-	P	W	
		s) Ovality	Major	Physical		As per data sheet	As per data sheet	Test Report	-	P	W	
		t) Eccentricity	Major	Physical		As per data sheet	As per data sheet	Test Report	-	P	W	
		u) Mass & uniformity & zinc coating on armour	Major	Physical		As per data sheet & FS	As per data sheet & FS	Test Report	-	P	W	
		v) Resistivity of Strip armour	Major	Electrical		As per data sheet & FS	As per data sheet & FS	Test Report	-	P	W	
		w) Swelling height of water swellable tape	Major	Physical		As per data sheet & FS	As per data sheet & FS	Test Report	-	P	W	
		x) Flammability test	Major	Physical		As per IS-78098/II/2011	As per IS-78098/II/2011	Test Report	-	P	W	
		y)Impulse withstand test	Critical	Electrical		IS 7098/II/2011	IS 7098/II/2011	Test Report	-	P	W	

ANNEXURE G: QUALITY ASSURANCE PLAN (QAP)

FOR 33 & 66 kV EHV CABLES

S. NO.	COMPONENT & OPERATION	CHARACTERISTICS	CLASS	TYPE OF CHECK	QUANTUM OF CHECK	REFERENCE DOCUMENT	ACCEPTANCE NORMS	FORMAT OF RECORD	AGENCY			Remark
									SV	MFR	BSES	
1	2	3	4	5	6	7	8	9	10	11	12	13
	Legend : SV : Sub-Vendor of Cable Manufacturer, MFR : Cable Manufacturer, MPS : Material Purchase Specification,											
	P : Perform, W : Witness, V : Verification											
		z) Ageing & Water absorption test(Gravimetric) on Insulation & Outer sheath	Major	Physical		IS 5831/84	IS 5831/84	Test Report	-	P	W	
		z1) Heating Cycle with Potential	Critical	Electrical	sample basis, once per PO			Test Report	-	P	W	
		z2) Raw Material Verification in all aspects	Major	Physical	Each Lot					P	W	
		Z3) OFC Continuty Test and verification of outer sheath marking with continuous 15mm red strip for OFC embedded identification	Major	Physical	Each Lot					P	W	
4	Type tests at vendor's works	a) Tests on conductor										
		i) Annealing test for copper	Major	Physical		IS 8130/84	IS 8130/84	-	-	P	V	Verification of process records. Tests N/A on finished conductor.
		ii) Tensile test for aluminium	Major	Physical		IS 8130/84	IS 8130/84	-	-	P	V	
		iii) Wrapping test for aluminium	Major	Physical		IS 8130/84	IS 8130/84	-	-	P	V	
		iv) Conductor resistance test	Major	Electrical		IS 8130/84	IS 8130/84	Test Report	-	P	V	
		b) Tests for armouring wires/strips										
		i) Dimensions of wire/strip	Major	Physical		IS 3975, IS 10810 Pt. 36 & Tech. Data sheet		Test Report	-	P	W	
		ii) Tensile strength & Elongation at break	Major	Physical		IS 3975	IS 3975	Test Report	-	P	W	Only for Steel wires/strips
		iii) Torsion test for wire	Major	Physical		IS 3975	IS 3975	Test Report	-	P	W	
		iv) Winding test for strip	Major	Physical		IS 3975	IS 3975	Test Report	-	P	W	
		v) Uniformity of zinc coating	Major	Chemical		IS 3975	IS 3975	Test Report	-	P	W	
		vi) Mass of zinc coating	Major	Chemical		IS 3975	IS 3975	Test Report	-	P	W	
		vii) Resistivity of wire/strip	Major	Electrical		IS 3975	IS 3975	Test Report	-	P	W	
		c) Test for thickness of insulation & sheath	Major	Physical		IS 7098/II/2011 & Tech. Data sheet	IS 7098/II/2011 & Tech. Data sheet	Test Report	-	P	W	
		d) Physical tests for insulation									W	
		i) Tensile strength & Elongation test	Major	Physical		IS 7098/II/2011	IS 7098/II/2011	Test Report	-	P	W	
		ii) Ageing in air oven	Major	Physical		IS 7098/II/2011	IS 7098/II/2011	Test Report	-	P	W	
		iii) Hot set test	Major	Physical		IS 7098/II/2011	IS 7098/II/2011	Test Report	-	P	W	
		iv) Shrinkage test	Major	Physical		IS 7098/II/2011	IS 7098/II/2011	Test Report	-	P	W	
		v) Water absorption (gravimetric)	Major	Physical	One sample per Tender	IS 7098/II/2011	IS 7098/II/2011	Test Report	-	P	W	
		e) Physical tests for outer sheath									W	

ANNEXURE G: QUALITY ASSURANCE PLAN (QAP)

FOR 33 & 66 kV EHV CABLES

S. NO.	COMPONENT & OPERATION	CHARACTERISTICS	CLASS	TYPE OF CHECK	QUANTUM OF CHECK	REFERENCE DOCUMENT	ACCEPTANCE NORMS	FORMAT OF RECORD	AGENCY			Remark
									SV	MFR	BSES	
1	2	3	4	5	6	7	8	9	10	11	12	13
	Legend : SV : Sub-Vendor of Cable Manufacturer, MFR : Cable Manufacturer, MPS : Material Purchase Specification,											
	P : Perform, W : Witness, V : Verification											
		i) Tensile strength & Elongation test at break	Major	Physical		IS 5831/84	IS 5831/84	Test Report	-	P	W	
		ii) Ageing in air oven	Major	Physical		IS 5831/84	IS 5831/84	Test Report	-	P	W	
		iii) Shrinkage test	Major	Physical		IS 5831/84	IS 5831/84	Test Report	-	P	W	
		iv) Hot deformation test	Major	Physical		IS 5831/84	IS 5831/84	Test Report	-	P	W	
		v) Loss of mass in air oven	Major	Physical		IS 5831/84	IS 5831/84	Test Report	-	P	W	
		v) Heat shock test	Major	Physical		IS 5831/84	IS 5831/84	Test Report	-	P	W	
		vi) Thermal stability test	Major	Physical		IS 5831/84	IS 5831/84	Test Report	-	P	W	
		f) Electrical tests in sequence									W	
		i) Partial discharge test	Critical	Electrical		IS 7098/II/2011	IS 7098/II/2011	Test Report	-	P	W	
		ii) Bending test	Major	Physical		IS 7098/II/2011	IS 7098/II/2011	Test Report	-	P	W	
		iii) Partial discharge test	Critical	Electrical		IS 7098/II/2011	IS 7098/II/2011	Test Report	-	P	W	
		iv) Dielectric power factor as a function of voltage	Major	Electrical		IS 7098/II/2011	IS 7098/II/2011	Test Report	-	P	W	
		v) Dielectric power factor as a function of temperature	Major	Electrical		IS 7098/II/2011	IS 7098/II/2011	Test Report	-	P	W	
		vi) Heating cycle test	Major	Electrical		IS 7098/II/2011	IS 7098/II/2011	Test Report	-	P	W	
		vii) Dielectric power factor as a function of voltage	Major	Electrical		IS 7098/II/2011	IS 7098/II/2011	Test Report	-	P	W	
		viii) Partial discharge test	Critical	Electrical		IS 7098/II/2011	IS 7098/II/2011	Test Report	-	P	W	
		ix) Impulse withstand test	Critical	Electrical		IS 7098/II/2011	IS 7098/II/2011	Test Report	-	P	W	
		x) High voltage test	Critical	Electrical		IS 7098/II/2011	IS 7098/II/2011	Test Report	-	P	W	
		g) Insulation resistance (Volume resistivity test)	Major	Electrical		IS 7098/II/2011	IS 7098/II/2011	Test Report	-	P	W	
		h) Flammability test	Major	Physical		IS 7098/II/2011	IS 7098/II/2011	Test Report	-	P	W	
D	**PACKING & MARKING**											
1	Packing & Marking	a) Cable end sealing	Major	Visual	100 %	IS 7098/II/2011/ Agreement	IS 7098/II/2011/ Agreement	-	-	P	W/V	BSES representative may verify these characteristics on randomly selected drums.
		b) Pulling eye at leading end- removed from vendor scope, end cap shall be provided at both the end of cable	Major	Visual	100 %	As per agreement	As per agreement	-	-	P	W/V	
		b) Stencilling/Marking on drum	Minor	Visual	100 %	IS 7098(Part 2):2011/ Agreement	IS 7098(Part 2):2011/ Agreement	-	-	P	V	

ANNEXURE G: QUALITY ASSURANCE PLAN (QAP)

FOR 33 & 66 kV EHV CABLES

S. NO.	COMPONENT & OPERATION	CHARACTERISTICS	CLASS	TYPE OF CHECK	QUANTUM OF CHECK	REFERENCE DOCUMENT	ACCEPTANCE NORMS	FORMAT OF RECORD	AGENCY			Remark
									SV	MFR	BSES	
1	2	3	4	5	6	7	8	9	10	11	12	13
	Legend : SV : Sub-Vendor of Cable Manufacturer, MFR : Cable Manufacturer, MPS : Material Purchase Specification,											
	P : Perform, W : Witness, V : Verification											

Note

1. Checks specified above for Raw Material, In-Process and Final Inspection shall be as relevant to the specific cable construction.
2. Number of samples shall be selected as per Factory Standard/Agreement wherever 'sample' is indicated for extent of check.
3. Plant standards shall be followed in case Technical Data Sheet does not include requirements for characteristics to be checked.
4. BSES may witness Raw material and in process inspection in addition to Routine/Acceptance tests at any time/stage of manufacturing.
5. BSES's Inspector may randomly select a cable drum for type testing at vendor's works.
6. For each of the offered lot for inspection, BSES may randomly select one cable drum for testing of end cap "Destructive testing" to verify adhesion of sealing cap to cable outer sheath. .
7. All factory Type Tests shall be Witnessed by BSES

Annexure- H

Testing and manufacturing process requirements w. r. t. TR- XLPE insulation

All cables made with TR-XLPE Insulation should be tested and/or certified to meet the following performance parameters as per ANSI /ICEA S-94-649 after one year AWTT.

Property	Units	Requirements Values
Min. Avg. Electrical Breakdown Strength(qual. test)	Kv/mm	≥ 25
Impulse Strength	Kv/mm	≥ 83
Water Tree Length	Mm	0.25
Max. Bowtie Tree Density	(Number per 16.4 cu. cm)	Maximum 15 (0.12-0.25 mm range)

Manufacturing processes to produce high-quality cables with the following characteristics:

- Cure consistency with hot set/creep less than 100%
- No voids larger than 75 microns per 16.4 cubic cm
- No ambers larger than 250 microns per 16.4 cubic cm
- No contaminants larger than 125 microns and less than 5 between 50-125 microns per cubic 16.4 cubic cm tested.
- Neutral indent on cable is less than 375 microns
- Cable insulation concentricity greater than 90% tested
- No protrusions greater than 75 microns at the conductor shield and 125 microns at the insulation shield

Annexure-I: Deviation Format

Sl. No.	Document Name	Clause No.	Deviation	Reason	Merit to BSES

BSES

Technical Specification

For Heat Shrinkable & Cold Shrinkable Straight Through Jointing Kit

(11 KV, 33 KV, 66 KV XLPE Insulated Cables)

Specification no – BSES-TS-44-STTH-R0

Rev:		0
Pages		23
Date:		19 Apr 2022
Prepared by	Abhishek Vashistha	
	Gautam Deka/Pronab Bairagi	19/4/22
Reviewed by	Puneet Duggal	
	Amit Tomar	
Approved by	Gaurav Sharma	
	Gopal Nariya	

Index

1.0.0 Scope of work 3
2.0.0 Codes & standards 3
3.0.0 Cable Construction 4
4.0.0 Straight-Through Joints (STJ) 5
5.0.0 Quality Assurance Plan (QAP) 11
6.0.0 Deviations 12
7.0.0 Delivery 12
Annexure - A: Guaranteed Technical Particulars (GTP) 13
Annexure - B: Kit Content Table (KCT) 15
Annexure - C: Routine and Acceptance Test 16
Annexure - D: Deviation Sheet 16
Annexure - E: Service Conditions 17
Annexure - F: Aluminium crimping-type Ferrule for compacted circular conductor only for Heat Shrink joints 18
Annexure – G: Strip type GI canister (V.B. Can) for joint protection only for Heat Shrink Joint 19
Annexure – H : Job card Details 20
Annexure – I : SOP for jointing work 21
Annexure – J Joint Marker 23

1.0.0 Scope of work

A. Heat Shrinkable / Cold shrinkable Straight Joint Kits (hereinafter briefly referred to as "STJ Kits"), suitable for 11 kV, 33 & 66kV XLPE cables, shall be designed, manufactured, tested, packed and delivered by the Vendor, as per Purchaser's requirements.

B. Supervision, during installation of joints at site if mentioned in the order.

C. During post-installation period, if a joint fail at site, the vendor shall depute a technical team to site for a root-cause analysis of the failure of the joint, in the presence of BSES officials. An Analysis Report shall then be submitted for BSES's review and approval. If this report concludes the cause of failure as due to a design/manufacturing defect in a component, then vendor shall replace all such components in the entire stock available with BSES.

2.0.0 Codes & standards

2.1.0 National Standards:

S No.	Standard Number	Title
2.1.1	IS- 13573: 2011	Joints & Terminations of Polymeric Cables for working voltages from 6.6 kV up to and including 33 kV Performance Requirements and Type Tests
2.1.2	IS- 7098: Part 2:1985	Cross-linked Polyethylene (XLPE) Insulated PVC sheathed cables: Part 2 - For working voltages from 3.3 kV up to and including 33 kV
	IS- 7098: Part 3:1993	Cross-linked polyethylene insulated thermoplastic sheathed Cables specification: Part 3 - For working voltages from 66 kV up to and including 220 KV
2.1.3	IS- 10810: 1984	Methods of test for cables

2.1.1 International Standards:

S No.	Standard Number	Title
2.2.1	EA TS - 09-13	Electricity Association - Technical Specification – 09 – 13 Material component for use in Electric Power Cable Termination & Joints for System voltage above 1kV up to 36 kV
2.2.2	IEC - 60183	Guide to the selection of high voltage cables
2.2.3	IEC - 885 Part 1 to 3	Electric test methods for electric cables
2.2.4	IEC - 60502 - 4	Power Cable Accessories for XLPE Cables above 3kV & up to 30 kV Test methods
2.2.5	IEC - 60840	Power cable with extruded insulation and their accessories for rated voltage above 30 kV (Um=36 kV) up to 150 kV (Um=170 kV) - test methods and requirements.

3.0.0 Cable Construction

Normal sizes of XLPE cables used in BSES system, construction features and corresponding joint requirements of cables are indicated below:

a. 11kV, 3-core x 150 sq mm AL
b. 11kV, 3-core x 300 sq mm AL
c. 11kV, 3-core x 400 sq mm AL(Conventional)
d. 11kV, 3-core x 300/400 sq mm AL (Single and three core long barrel Repairing Joint)
e. 11kV, 3-core x 400 sq mm AL (OFC embedded)
f. 11kV, 1-core x 1000 sq mm AL
g. 11kV, 1-core x 150 sq mm AL HTAB
h. 11kV, 1-core x 95 sq mm AL HTAB
i. 33kV, 3-core x 400 sq mm AL
j. 33kV, 3-core x 400 sq mm AL (OFC embedded)
k. 33kV, 3-core x 400 sq mm AL (Single and three core long barrel Repairing Joint)
l. 66kV, 1-core x 630 sq mm AL
m. 66kV, 1 core x 1000 sq mm AL
n. 66kV, 1 core x 1000 sq mm AL (For Single core long barrel Repairing Joint)
o. 66kV, 3-core x 300 sq mm AL
p. 66kV, 3-core x 300 sq mm AL (OFC Embedded)

3.1.0	Conductor	a) Electrolytic Grade Stranded Aluminum Conductor b) Grade: H2 / H4 as per IS: 8130 / 1984 (For Al) c) Stranded, compacted and circular in shape d) Class 2 e) Longitudinal "Water-Blocking Arrangement" (or water-tight construction or water barrier protection)
3.1.1	Conductor Screen	Extruded Semi Conducting material
3.1.2	Insulation	Extruded XLPE Insulation for 11 kV and Extruded TR-XLPE Insulation for 33 kV and 66 kV
3.1.3	Insulation Screen	Freely strippable Semi Conducting (without application of heat) for 66kV firmly bonded.
3.1.4	Water Swell able Tape	Semi-conducting Water Swell-able Tape under the copper tape on each core.
3.1.5	Copper Tape	Copper Tape applied helically over the layer formed by application of insulation screen, water swell able tape and identification strip
3.1.6	Filler	All interstices, including center interstices filled by PP filler. In case of OFC embedded cable.48 no OFC (36 single mode and 12 no multi mode) as a filler in 11kV 3CX400 sqmm cable, 33kV 3CX400 and 66 kV 3CX300 sqmm cable
3.1.7	Over all three cores	Binder tape
3.1.8	Inner Sheath	Extruded Inner Sheath of Black PVC type ST-2.

3.1.9	Armour	a) For 11 kV 3-core Cables : Galvanized Steel flat strip armour b) For 1-core Cables : Non-Magnetic, Hard drawn Aluminium wire (flat/round) c) Corrugated aluminium or lead sheathed for 1core 66kV Cable d) For 33kV and 66 kV 3-core cable- Galvanized Steel Round wire
3.1.10	Binder Tape	Rubberized cotton tape
3.1.11	Outer Sheath	Extruded outer sheath of PVC (ST-2) for 11 kV and 33 kV cable. For 66 kV cable, HDPE ST 7 with termite- repellant and anti-rodent properties with extruded semicon/graphite layer over HDPE ST7.
3.1.12	HTAB Cable (1CX150 and 1CX95)	AB cable- conductor-conductor semicon screen- TR XPLE-insulation screen-- Water Swallowable tape -Round wire armour (in the place of copper tape), Water Swallowable tape-outer sheath+massenger wire
3.1.13	OFC	For OFC embedded cable of sizes 11kV 3CX400 sqmm cable, 33kV 3CX400 and 66 kV 3CX300 sqmm cable - Single Mode-36 Nos. Multi Mode- 12 nos. All the OFC cable is placed as filler inside the cable.

4.0.0 Straight-Through Joints (STJ)

General Technical Requirements for Straight-Through Joints (STJ) for XLPE cables are as follows:

Scope: Design, manufacture, testing and supply of Straight-Through Joint Kits for 11 kV, 33 kV & 66kV Power Cables.

Functional requirements for Heat Shrinkable / Cold Shrinkable STJ joints are given below:

4.1.0 Heat Shrinkable / Cold Shrinkable STJ joints		
4.1.1	Cable preparation	Cable preparation shall be as per installation instruction sheet. Manufacturer shall be provide Installation instruction sheet in every kit
Connector		
4.1.2	Conductor Screen	For 11kV a) Conductors to be jointed by crimping connectors b) Annular CSA (cross-sectional area) of the ferrule shall not be less than CSA of the conductor of the cable. Length of the ferrule shall be sufficient to allow adequate number of crimps, to limit temperature rise at the joint. (Vendor to furnish dimensional drawing for ferrule, indicating crimp marks.) c) For aluminium cable, the crimped ferrule shall be of aluminium d) Refer annexure F for GA drawing of crimping ferrule e) For single core repairing joint- long barrel mechanical connector/ferrule shall be provided (middle part of ferrule/connector shall be solid for better connectivity)

		For 33kV and 66kV a) Shear bolt type mechanical connector b) Approved make: • Tyco Electronics (BSM-185/400-U) • Pfisterer (332617010) • Nexans • Niled • Or equivalent type tested make (Manufacturer shall take prior approval from CES) d) Maintain smooth surface over connector after cut the shear head bolt e) Vendor to furnish drawing for the mechanical connector **Note:** In all voltage grade- For single core long barrel repairing joint, one long barrel connector/ferrule and for three core long barrel repairing joint, three long barrel connector/ferrule shall be provided along with all kind of accessories.
4.1.3	Void filling and stress relief over crimped connector and cut point of the insulation screen.	By means of High permittivity mastic tapes / Lubricant.
4.1.4	Metal screen continuity	By means of Tinned copper wire mesh, wrap individual core from cu screen with 50 % overlap and continue on other side cu screen. Bind the copper wire mesh on copper screen with copper binding wire/CFS
Armour / Earthing Continuity		
4.1.5	Armour bond	a) By means of a combination of steel (G.I.) support ring (for 3 - core Cable) or Aluminium support ring (for 1 - core Cable) and two nos. of stainless steel hose clips. b) GI Support Ring shall be 'zinc-sprayed with central bulge / bump'.
4.1.6	Minimum Armour Fault Current Carrying capacity	11 kV Cable – 11 kA for 1 sec 33 kV Cable – 31.5 kA for 1 sec 66 kV Cable – 31.5 kA for 1 sec
4.1.7	Provision of Armour continuity	By means of tinned copper braided conductor as per following 11 kV cables – 11 kV Cable – Three No's of 25 sq mm each 33 kV Cable – Four No's of 50 sq mm each 66 kV Cable – Four No's of 50 sq mm each

Accessories		
4.1.8	Suppression of electrical discharges over XLPE insulation	Cleaning solvent /equivalent, for manual application.
4.1.9	Installation Instruction	Shall be provided in English and Hindi and shall be inside every kit.
4.1.10	Sheet paper Tap	Paper tape, required for measurements during jointing, shall be provided inside every kit.
4.1.11	Identification Tag (for traceability)	1. An aluminum pouch with paper tag & sealing arrangement at one end shall be provided.This tag is required to be tied over the cable at one side of the joint. The paper tag shall give following information 1) Vendor kit designation 2) Cable section/Division 3) Type of joint 4) Size of Joint 5) Make of joint 6) Voltage class 7) Serial no. of kit 8) Vendor lot & batch no 9) Month & year of manufacturing 10) Date of installation 11) Name of jointer 12) Name of vendor supervisor 13) Name of BSES supervisor 14) Remarks 2. In addition to above Stainless Steel Tag shall be provided with following details for straight through joint a. Manufacturing month and year (MM/YY format) b. Manufacturer name i.e Comp c. Manufacturer own sl no for future tracing
4.1.12	Printing on each Heat/cold shrinkable or Moulded component	Month and year of manufacturing, batch no. /lot no., size, make, type etc.
4.1.13	GPS Coordination	Vendor to capture GPS coordinates and shall include in job card of each joint at their own cost.
4.1.14	Hydraulic Crimping	Using of Hydraulic crimping tool is mandatory for crimping purpose
4.1.15	Coffin for completed joint and Joint Marker	After successfully completion of joint, Coffin shall be made by bidder for completed joint. Drawing shall be provided by BSES. Excluding drawing, everything shall be in the scope of bidder. After back filling a joint marker shall be fixed by bidder above ground to mark the joint location. Drawing is enclosed with this

		tech spec.
4.1.15	Electronic Ball Marker for 33kV and 66kV Cable Joint.	Passive and Active ball shall be supplied and placed at each and every joint to mark the joint electronically. Data shall be filled by bidder as per BSES requirement.
4.1.16	OFC	11kV 3CX400, 33kV 3CX400 and 66kV, 3CX300 sqmm cables are OFC embedded. OFC joint shall be supplied along with main cable joint. (36 single mode and 12 nos. multi mode OFC inbuilt inside cable). OFC joint shall be made separately from main cable joint.
4.2.0 Only for Heat Shrinkable STJ joints		
4.2.1	Stress Control System	a) The earthed insulation screen of an XLPE cable is terminated at a suitable distance from the connector (Ferrule). b) The stress control tube is in electrical contact with insulation screen. c) Impedance of the tube shall be constant up to an operating temperature and shall be within the range 1 x 10^8 ohm-cm to 8x10^8 ohm-cm. d) The physical and electrical properties shall conform to EA TS 09-13. d) For single phase repairing joint-stress control tube shall be suitable for long barrel mechanical connector/ferrule
4.2.1.1	Insulation build-up	a) Maximum three layers of insulation tubes shall be used. Total thickness of the insulation being provided in the joint shall not be less than 1.2 times the insulation of the cable being jointed. b) Outer-most tube shall be screened insulating tube (dual wall tube). This tube shall be manufactured by extrusion process. c) Physical and Electrical properties shall conform to EA TS 09-13. d) For single phase repairing joint-insulation build up shall be suitable for long barrel mechanical connector/ferrule
4.2.2	Sealing end of tube	By means of Core end sealing sleeve with red mastic coating
4.2.3	Mechanical Protection	a) For 3-core cable: By means of a rollable steel mat (with required protective coating against corrosion) b) For 1-core cable: i) Copper wire mesh ii) Adhesive coated medium wall tube iii) One more layer of copper wire mesh iv) Medium wall tube
4.2.4	Corrosion Protection	By means of semi-rigid tubes, internally coated with water blocking sealant. Thick wall Insulating tube

4.3.0 Only for Cold Shrinkable ST joints Scope: The term cold shrink applies to materials, which are capable of shrinking without raising the material above the ambient temperature of its immediate surroundings. The material of the rubber insulator used in the Cold Shrink assembly shall be silicone which is factory expanded and placed on a removable core. The removing of the core causes the cold shrink assembly to shrink. The cold shrink assembly shall maintain a compressive force on the cable continuously throughout the life of the product. This pressure will ensure a complete moisture seal.		
4.3.1	Stress Control System	By means of one piece body (splice assembly) providing stress control, insulation and screen continuity.
4.3.2	Mechanical Protection	By application of mastic coated vinyl tape and armor cast structural material. The taped armor cast layer may also be sprayed with water to hasten the curing.

4.4.0	Technical Particulars	Vendor shall submit Guaranteed Technical Particulars (GTP) as per Annexure A.
4.5.0 Testing & Inspection		
4.5.1	Type Tests (CPRI/ERDA)	a) Straight-Through Joint shall be of type-tested quality from CPRI/ERDA. Type Test report shall not be more than 5 years old. b) In addition to this, in case of rate contact, vendor will be required to conduct type-testing on heat/cold -shrinkable and moulded components, stress grading mastic, etc., in line with EA TS 09-13 standard, at third party test laboratory once in 6 months on randomly selected sample of each voltage rating without any commercial implication to BSES. Also special test shall be done as per IS 13573.2.2011, Table-7 without any cost implication to BSES. Cable for type test may be provided by buyer at the cost of bidders. C) If product is not type tested or test report is more than 10 years old from CPRI/ERDA (subject to no change in the relevant IS/IEC.IEEE) , same shall be carried out by seller, sample shall be selected randomly by BSES, test cost to be borne by seller. For new vendor, type test is mandatory from CPRI/ERDA of BSES sample at their own cost.
4.5.2	Routine & acceptance Tests	I) All the routine and acceptance tests shall be carried out as per EA TS 09-13 guidelines, refer Annexure C. II) H.V. Test shall be carried out on a randomly selected and installed Straight-Through Joint, in the presence of Purchaser's representative, at manufacturer's works. III) The joint shall withstand a test of 4Uo voltage for 4 hours.

4.5.6	Inspection	I) Purchaser reserves the right to inspect /witness all tests on the STJ Kits at Seller's works at any time, prior to dispatch, to verify compliance with the specification. II) In-process and / or final inspection call intimation shall be given in advance to purchaser.
4.5.7	Test Certificates	i) Three sets of complete Test Certificates (Routine & Acceptance tests) shall be submitted along with the delivery of STJ Kits. ii) Bought-out Items: Vendor shall submit Test Certificates, lot/batch number-wise, from their sub- suppliers / principal. TC's should clearly indicate the measured technical parameters, in accordance with sub-supplier's specification. (Also refer Annexure - C)
4.6.0	Documents	"Documents" refer to Documents, Data, Manuals, etc. (Scanned copy of signed documents also shall be part of entire soft file (e-file) or CD.
4.7.0	Along with the Bid	Vendor shall submit signed 3 sets (plus 1 set of soft copy) of following documents a) GTP (duly filled-in) (as per Annexure — A) b) Cross-sectional drawings for components Assembly. c) Type Test Certificates d) Complete Catalogue and Installation Instructions. e) Any other document.
4.8.0	After Award Contract	Vendor shall submit signed 2 sets (plus 1 set of soft copy) of above-mentioned documents within 15 days, for Purchaser's approval.
4.8.0	"As-Built" documents	Final signed "As-built" documents for the equipment in 3 sets (hard copy), 1 no. soft copy and 1 no. CD. These documents shall include signed Routine & Acceptance Test Certificates also.

4.9.0	Packing, Marking, Shipping, Handling and Storage	a). Every component / kit / box shall be properly sealed/ packed for protection against damage. Stress grading mastic shall be packed in air-tight / air-sealed packing. b). Every kit box shall be wrapped in polythene covers. c. Separate packing (sub-kits) shall be provided, for components (given below) used in crotch area and connector area. These sub-kits, labeled as "CROTCH KIT" and "CONNECTOR KIT', shall be placed inside every kit box. i) Crotch Kit Components --Conductive cable break-out -- Yellow moulded wedge -- Break-out end sealing tube -- Break-out finger sealing tube -- Stress grading mastic ii) Connector Kit : Components -- Ferrule (connector) -- Void Filling mastic (yellow)
4.9.1	Identification Label	Markings / Labels shall be on both sides of every packed box. 1) Identification number/type designation (as per manufacturer's standard) 2) Voltage grade, size, description of the Kit (including the voltage grade, size, type of the cables, for which it is to be used) 3) Batch no., lot no., etc. 4) Quantity 5) a) Purchase Order no. & date b) Purchaser's name c) BSES's SAP code number 6) Weights (kg) of each Cable Termination Kit and of each box containing kits. 7) Manufacturer's name 8) Month & Year of Manufacturing 9) Date of packing, shelf life (if applicable)
4.9.2	Transit damage	The seller shall be responsible for any transit damage due to improper packing.

5.0.0 Quality Assurance Plan (QAP)

5.1.0	Vendor's Quality Assurance Plan (QAP)	To be submitted for Purchaser's approval.
5.2.0	Sampling Method	Sampling Method for quality checks shall be as per manufacturer's standard practice / ESI guidelines and Purchaser's prior approval shall be taken for the same.
5.3.0	Inspection Hold-Points	To be mutually identified, agreed and approved in Quality Plan.

6.0.0 Deviations

6.1.0	Deviations	a) Deviations from this specification shall be listed by bidder clause wise along with optional offer and has to submit the list along with bid./quotation. BSES will review the deviations and if BSES is agreed with the deviation, seller has to take written confirmation from BSES on deviation during tender evaluation.. b) In the absence of any list of deviations from the Seller with bid as well as written confirmation from BSES on deviations, it will be assumed by the Buyer that the Seller complies with the Specification fully. c) Any deviations mentioned in any other submitted bid documents (i.e.in filled GTP, Catalog, BSES old approval, buyer's/seller's standards etc) by seller without separate deviation sheets will not be considered as a deviation from this tech spec at any stage of contract.

7.0.0 Delivery

7.1.0	Delivery	Dispatch of Material: Vendor shall dispatch the material, only after the Routine Tests /Final Acceptance Tests (FAT) of the material witnessed/waived by the Purchaser, and after receiving written Material Dispatch Clearance Certificate (MDCC) from the Purchaser.

8.0.0 Inspection Expenses

NA

9.0.0 Failure Analysis and Penalty

Failure of joint shall be analyzed by BSES and Vendor jointly. Joint failure in regards to poor quality joint, poor work man ship, etc. shall be in the account of vendors. Losses due to failure shall be recovered from vendor in case of warranty.

Annexure - A: Guaranteed Technical Particulars (GTP)

The Vendor is deemed to have examined all parts of the Specification documents and to have been fully informed, as to the nature of work and the conditions related to its performance.

S No.	Description	Purchase requirement	Vendor's data
1	Manufacturer's name		
2	Purchase Order no. & date		
3	Guarantee Period (minimum)	60 Months (from date of commissioning) / 66 Months (from date of receipt at Purchaser's store),whichever is earlier	
4	Applicable IS / IEC Standard followed by Vendor (incl. type test standard)		
5	Voltage Grade (kV)		
5.1	Lightning Impulse Voltage Withstand Test		
5.2	4Uo AC voltage withstand test for 4 hours	To be conducted on Installed joint at works	
6	Continuous operating temperature	90 deg. C	
7	Functional Requirements		
7.1	Method of Stress Control and Discharge Suppression		
7.2	Method of Insulation build-up and screening		
7.3	Method of earth bond a) Size and no. of braids b) Size of armour support c) No. of hose clips		
7.4	Method of mechanical protection a) for 3-core Cable b) for 1-core Cable		
7.5	Method of protection against corrosion (type & coating thickness of protective layer on steel mat)		

7.6	Method of conductor continuity a) For crimping connector b) For mechanical connector		
8	Description of items in the Kit, which are imported /sourced From Principal /Sub-suppliers		
9	Names of items in the Kit and their respective shelf life (months I years)		
10	Kit Content Table (KCT) enclosed? (Refer Annexure — B)	Yes / No	
11	Drawing for connector (ferrule) enclosed	Yes / No (If yes, mention the document reference)	
12	Is Annexure - D (Technical Deviation Sheet) duly filled-in?		
13	Packing (Qty) i) Packing of every Kit h) Group Packing	1 no -- No. of Kits per Box -- No. of Boxes	
14	Installation Procedure enclosed?	Yes / No (If yes, mention the document reference)	
15	Quality Assurance Program (QAP for raw materials, in-process inspection, factory testing) is enclosed?	Yes / No	
16	Whether all heat-shrinkable and moulded components of the kit meet the requirements of and have been tested in accordance with EA TS -09-1 3.(for heat-shrinkable joints)	Yes / No (If yes, details of test report no. /Date /name of test laboratory to be mentioned.)	
17	Type Test Reports (TTR) (Relevant test report no. & date, With type, size, other details of each type of Kit.) a) Prepared Joint: CPRI TTR as per BIS / IEC enclosed? b) Loose Components: CPRI TTR as per EA TS 09-13 enclosed?	Yes/No Yes/No	

18	Printing details on each of the Heat- shrinkable and Moulded components	(Mention the text, presently printed on each of the component)	
19	OFC kit (for OFC Embedded cable only of sizes 11kV 3CX400, 33kV 3CX400 and 66kV, 3CX300 sqmm cable)	Yes/no	

Annexure - B: Kit Content Table (KCT)

Vendor shall submit KCT as a consolidated table, consisting of all data, such as:

A. Heading

1. Voltage grade, size, description of the Kit
(Including the voltage grade, size, type of the cables, for which it is to be used)
2. Type designation (as per manufacturer's standard)

B. Details / Parameters (For each component/item of the KCT)

1. Lot no. /Batch no., etc.
2. Item number (manufacturer's standard)
3. Description
   a) Material, type, make and grade
   b) Dimensions cross sectional area
   c) Colour,
   d) Other description, if any
4. Function of the item
5. Quantity
6. Make/Name/Location of manufacturer/sub-vendor
   a) Minimum supplied (or in expanded form) diameter
   b) Maximum freely recovered diameter
7. a) Minimum supplied (or in expanded form) thickness
   b) Maximum freely recovered thickness

C. Notes on the KCT

Markings, printings and other details for individual/group of components is to be mentioned on KCT. For example:
a) Printing of item code, size, batch no., etc.
b) Printing on components
c) Other embossing or engraving, it any.

(Note: Vendor may attach an Annexure, for any additional information, if required.)

Annexure - C: Routine and Acceptance Test

A. Visual Examination

Condition of selected items / components, as per sampling method, shall be recorded. Some of the normal check-points can be as follows:

1. Every component shall be verified in quantity and description as per KCT.
2. All items shall be free from any defects, pin holes, cracks, etc.
3. Metallic components to be free from sharp edges.

B. Measurements of Dimensions

(Required / observed dimension — length, diameter, etc.)

1. Supplied dimensions
2. Recovered dimensions

C. Destructive Testing

On various heat-shrinkable / moulded components of ready Kits (items 3 and 4 are applicable only for heat-shrinkable components)

1. Tensile Strength
2. Wall Thickness Ratio
3. Heat Shock
4. Longitudinal Change, after full recovery
5. Ultimate Elongation
6. Low Temperature Flexibility
7. Dielectric Strength
8. Volume Resistivity

Routine Test Reports (RTR) (Typical)

Each RTR shall clearly indicate P.O. no. & date and also BSES's SAP code no. RTR shall record the serial numbers of the kits selected, as per vendor's sampling method. Following details, besides vendor's/manufacturers standard check-points, shall appear in every RTR.

Annexure - D: Deviation Sheet

Sr No.	Clause No.	Deviation

Annexure - E: Service Conditions

(Atmospheric conditions in Delhi)

a)	Average grade Soil Condition	
b)	Maximum altitude above sea level	1000 M
c)	Ambient Air temperature	Highest 50 Deg C, Average 40 Deg C
d)	Minimum ambient air temperature	0 Deg C
e)	Relative Humidity	100 % Max
f)	Thermal Resistivity of Soil	150 Deg C cm/W
g)	Seismic Zone	4
h)	Rainfall	750 mm concentrated in four months

Annexure - F: Aluminium crimping-type Ferrule for compacted circular conductor only for Heat Shrink joints

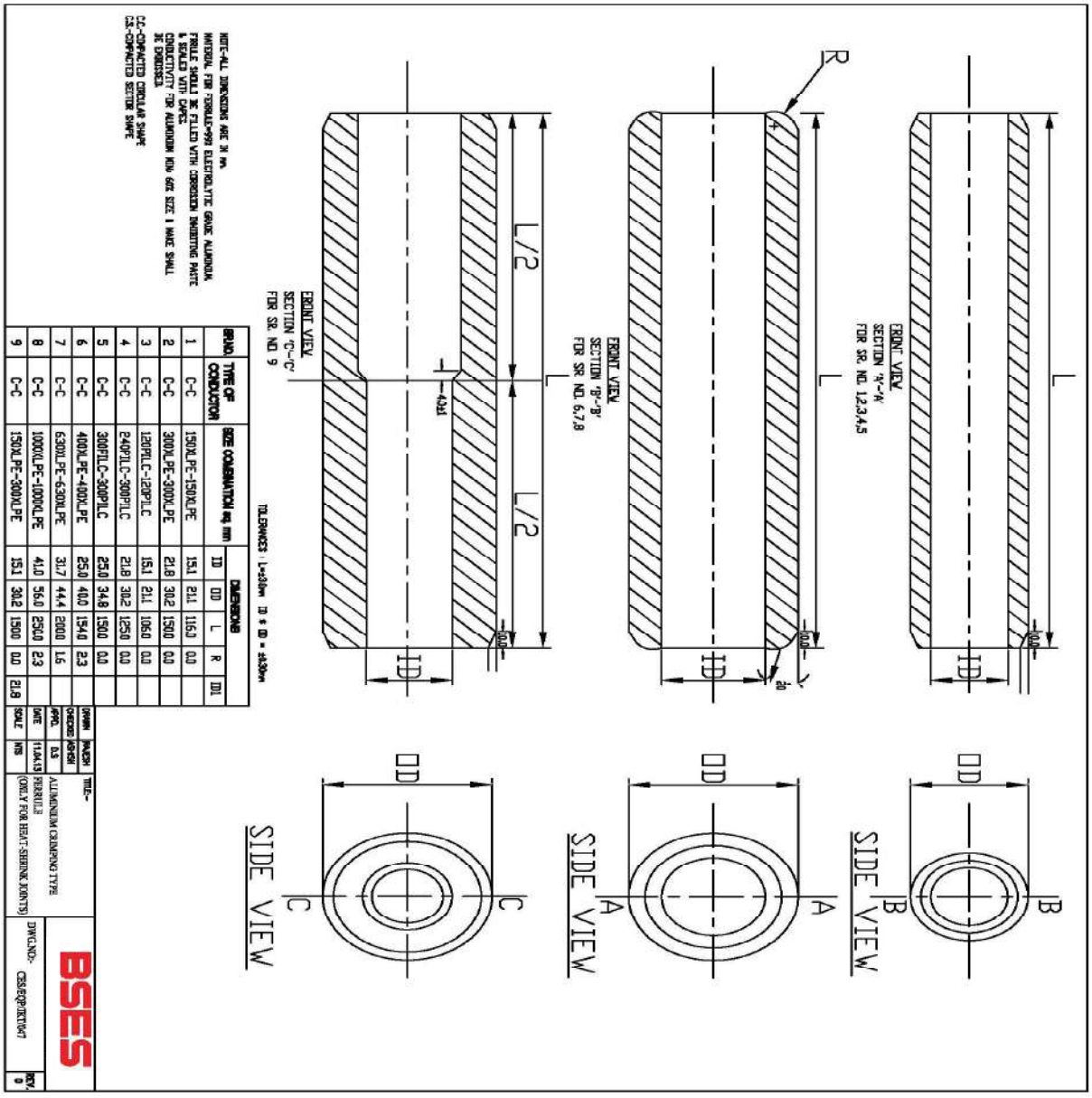

SR.NO.	TYPE OF CONDUCTOR	SIZE COMBINATION sq. mm	DIMENSIONS				
			ID	OD	L	R	ID1
1	C-C	150XLPE-150XLPE	15.1	21.1	1150	0.0	
2	C-C	300XLPE-300XLPE	21.8	30.2	1500	0.0	
3	C-C	120PILC-120PILC	15.1	21.1	1050	0.0	
4	C-C	240PILC-300PILC	21.8	30.2	1250	0.0	
5	C-C	300PILC-300PILC	25.0	34.8	1500	0.0	
6	C-C	400XLPE-400XLPE	25.0	40.0	1540	2.3	
7	C-C	630XLPE-630XLPE	31.7	44.4	2000	1.6	
8	C-C	1000XLPE-1000XLPE	41.0	56.0	2500	2.3	
9	C-C	150XLPE-300XLPE	15.1	30.2	1500	0.0	21.8

DRAWN RAJESH
CHECKED ASHISH
APPD. DJ
DATE 11/04/13
SCALE NTS

Annexure – G: Strip type GI canister (V.B. Can) for joint protection only for Heat Shrink Joint

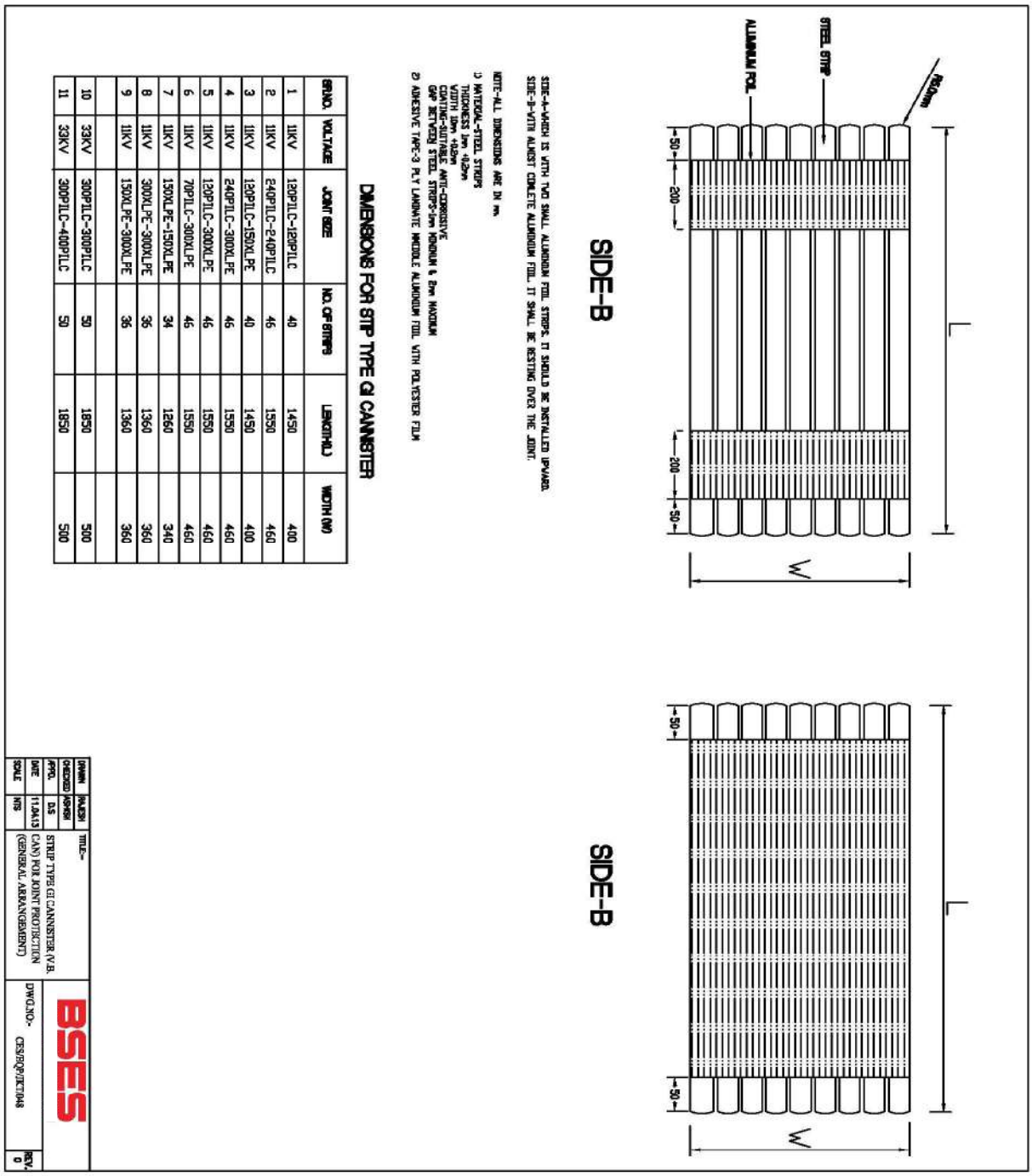

SIDE-A-WHICH IS WITH TWO SMALL ALUMINIUM FOIL STRIPS. IT SHOULD BE INSTALLED UPWARD.
SIDE-B-WITH ALMOST COMPLETE ALUMINIUM FOIL. IT SHALL BE RESTING OVER THE JOINT.

NOTE-ALL DIMENSIONS ARE IN mm.

1) MATERIAL-STEEL STRIPS
THICKNESS 1mm +0.2mm
WIDTH 10mm +0.2mm
COATING-SUITABLE ANTI-CORROSIVE
GAP BETWEEN STEEL STRIPS-5mm MINIMUM & 8mm MAXIMUM

2) ADHESIVE TAPE-3 PLY LAMINATE MIDDLE ALUMINIUM FOIL WITH POLYESTER FILM

DIMENSIONS FOR STIP TYPE GI CANNISTER

SR.NO.	VOLTAGE	JOINT SIZE	NO. OF STRIPS	LENGTH(L)	WIDTH (W)
1	11KV	120PILC-120PILC	40	1450	400
2	11KV	240PILC-240PILC	46	1550	460
3	11KV	120PILC-150XLPE	40	1450	400
4	11KV	240PILC-300XLPE	46	1550	460
5	11KV	120PILC-300XLPE	46	1550	460
6	11KV	70PILC-300XLPE	46	1550	460
7	11KV	150XLPE-150XLPE	34	1260	340
8	11KV	300XLPE-300XLPE	36	1360	360
9	11KV	150XLPE-300XLPE	36	1360	360
10	33KV	300PILC-300PILC	50	1850	500
11	33KV	300PILC-400PILC	50	1850	500

DRAWN	RAJESH	TITLE-	BSES
CHECKED	ASHISH	STRIP TYPE GI CANNISTER (V.B. CAN) FOR JOINT PROTECTION (GENERAL ARRANGEMENT)	
APPD.	D.S		
DATE	11JAN13	DWG.NO- CES/RQP/JKIT/048	REV. 0
SCALE	NTS		

Annexure – H : Job card Details

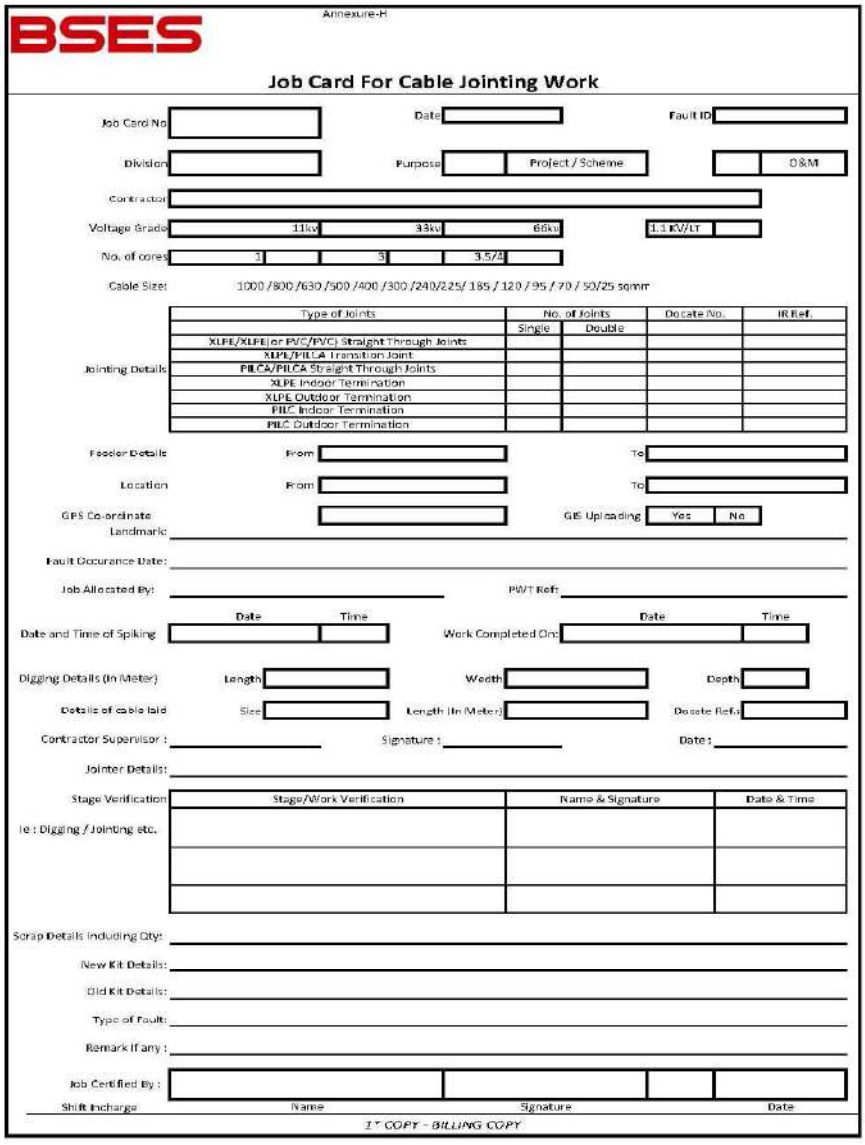

BSES

Annexure-H

Job Card For Cable Jointing Work

Job Card No | Date | Fault ID

Division | Purpose | Project / Scheme | O&M

Contractor

Voltage Grade | 11kv | 33kv | 66kv | 1.1 KV/LT

No. of cores | 1 | 3 | 3.5/4

Cable Size: 1000 /800 /630 /500 /400 /300 /240/225/ 185 / 120 / 95 / 70 / 50/25 sqmm

Jointing Details

Type of Joints	No. of Joints		Docate No.	IR Ref.
	Single	Double		
XLPE/XLPE(or PVC/PVC) Straight Through Joints				
XLPE/PILCA Transition Joint				
PILCA/PILCA Straight Through Joints				
XLPE Indoor Termination				
XLPE Outdoor Termination				
PILC Indoor Termination				
PILC Outdoor Termination				

Feeder Details: From | To

Location: From | To

GPS Co-ordinate | GIS Uploading: Yes | No

Landmark:

Fault Occurance Date:

Job Allocated By: | PWT Ref:

Date and Time of Spiking: Date | Time | Work Completed On: Date | Time

Digging Details (In Meter): Length | Width | Depth

Details of cable laid: Size | Length (In Meter) | Docate Ref.

Contractor Supervisor : | Signature : | Date :

Jointer Details:

Stage Verification

Stage/Work Verification	Name & Signature	Date & Time
Ie : Digging / Jointing etc.		

Scrap Details Including Qty:

New Kit Details:

Old Kit Details:

Type of Fault:

Remark If any :

Job Certified By : | Shift Incharge | Name | Signature | Date

1st COPY - BILLING COPY

Annexure – I : SOP for jointing work

SOP FOR REPAIRING OF CABLE FAULT (Shall be part of PO)		
Sl. No.	Activity	Responsibility
Initiation		
1	Identify and isolate fault and inform GNIIT in case of cable fault	Break down team
2	Updation of the details in OMS against respective feeder tripping event.	GNIIT
Fault Location		
1	Information sent to FLC team and SDO.	GNIIT
2	Mobilize FLC team and cable jointing contractor.	SDO
3	Identification of fault location	FLC Team
Preparation for Jointing		
1	Seeking permission from road owning agency	SDO
2	Payment of RR charges to Road owning agency	Finance
3	Digging	Cable jointing contractor
4	Cut faulty section and Pre-test (HV test) cable for multiple fault	Cable jointing contractor
5	BOQ estimation for jointing work (type, size and length of cable, type of jointing kit)	Cable jointing contractor
6	Filling material reservation slip (MRS) in SAP	SDO
7	Issuing and transporting material from store.	Cable jointing contractor
Jointing		
1	Cable preparation (overlap length of cable, slide of armour, build up with inner sheath etc)	Cable jointing contractor (for jointing details refer to manufacturer instruction manual)
2	Copper tape shields	
3	Core preparation	
4	Location of parts in completed joints	
5	Earthing of connection	
6	Completion of joints	
7	Take Photographs before, during and after jointing and send to CES	SDO
8	Supervision during jointing	SDO
9	Sending failed joint to Division store	Cable jointing contractor
Completion and reporting		
1	Intimate to breakdown team about joint completion.	Cable jointing contractor
2	Conduct HV test	Break down team
3	Restore of Supply through jointed cable	Break down team

4	Backfilling, compaction of excavated soil and removing of excess earth from the site	Cable jointing contractor
5	Completion information in Job Card (Details of work done, material consumption, location, feeder name and joint tag no., date, supervisor name, jointer name) sent to SDO	Cable jointing contractor
6	Above information sent to GNIIT	SDO
7	Send information about GPS location of Cable fault to GIS	SDO
8	Daily report of cable jointing to CES	Division Head
9	Updating of information in OMS including supervisor name, jointer name, feeder name	GNIIT
10	Information to include GPS location of cable fault.	GNIIT

Special Note-

1) Joints to be done preferably during day. In case of constraints, DGM (O&M) to authorize for night time jointing with supervisor
2) Daily joint report to be shared with CES
3) Bi-monthly analysis of faulty joint for ensuring warranty compliance to be organized at circle level by contractor in presence of DGM (O&M) and CES
4) Certification of job card for payment by DGM (O&M) subject to OMS compliance CES to check any gaps.
5) After completion of jointing (33kV and 66kV), all the joints shall be covered with RCC coffin. Coffin shall be filled with white sand complete from the hole provided at the top of the coffin.

Annexure – J Joint Marker

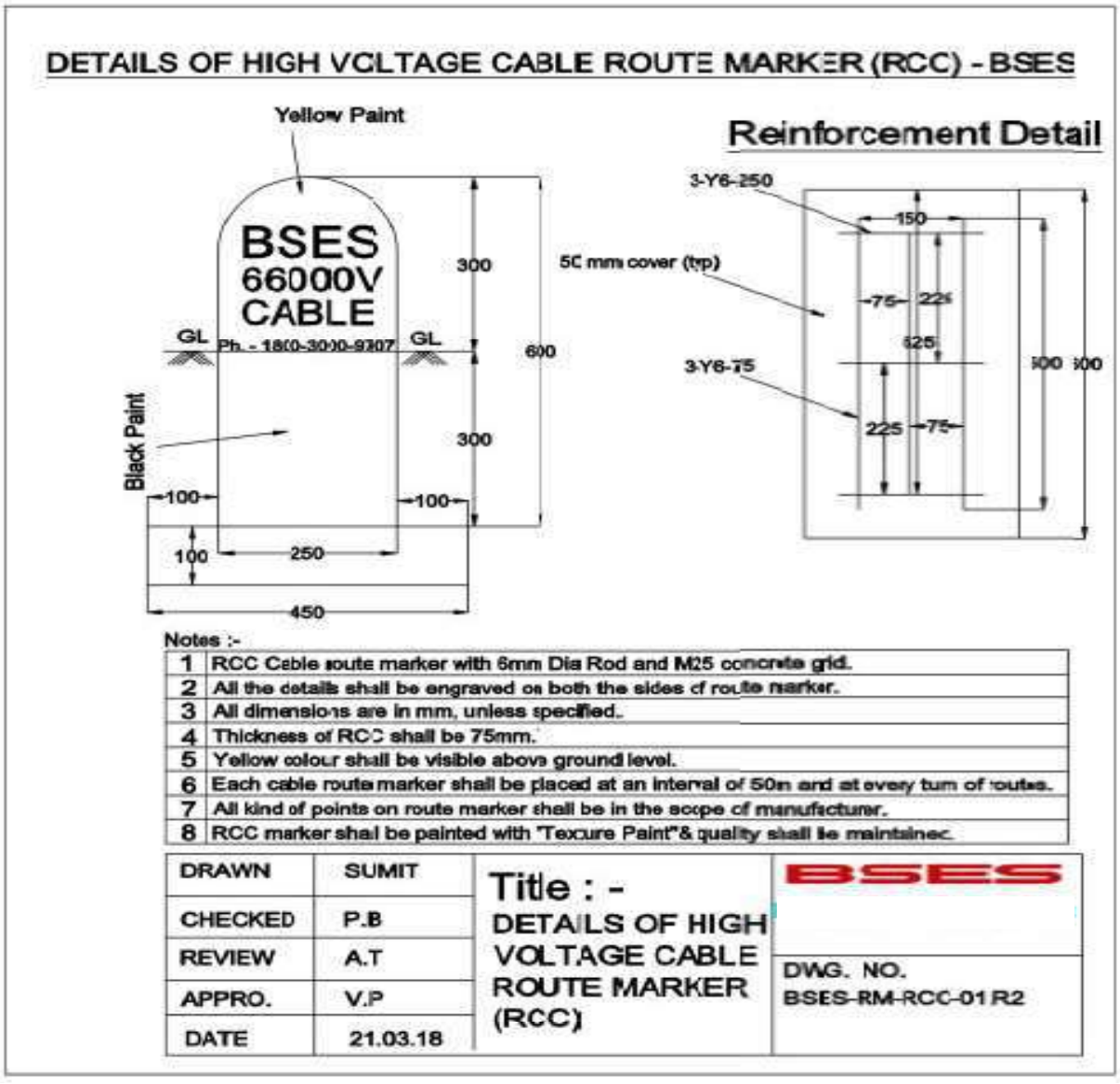

BSES

Technical Specification

For Heat Shrinkable &

GIS Cable Termination Kit

(11 kV, 33 kV, 66 kV XLPE Insulated Cables)

Specification no – BSES-TS-45-TERM-R0

Rev:		0
Pages		22
Date:		19 Apr 2022
Prepared by	Abhishek Vashistha	
	Gautam Deka/Pronab Bairagi	19/4/22
Reviewed by	Puneet Duggal	
	Amit Tomar	
Approved by	Gaurav Sharma	
	Gopal Nariya	

Index

Record of Revision 3
1.0.0 Scope of work 4
2.0.0 Codes & standards 4
3.0.0 Cable Construction 5
4.0.0 Cable Termination Kits 7
5.0.0 Quality Assurance (QA) 12
6.0.0 Deviations 13
7.0.0 Delivery 13
8.0.0 Inspection Expenses 13
9.0.0 Penalty 13
Annexure – A: Guaranteed Technical Particulars (GTP) 14
Annexure – B: Kit Content Table (KCT) 16
Annexure – C: Routine and Acceptance Test 17
Annexure – D: Technical Deviation Sheet 17
Annexure – E: Service Conditions 18
Annexure – F: Bimetallic Aluminium / Copper Lug 19
Annexure – G: Aluminum/Copper Lug For XLPE Cable 20
Annexure – H: SOP 21

Record of Revision

Item/Clause No.	Change in Specification	Approved By	Rev

1.0.0 Scope of work

Heat Shrinkable & GIS Termination Kits, suitable for 11 kV & 33 kV, 66 kV XLPE / PILC cables, shall be designed, manufactured, tested, packed and delivered by the Vendor, as per Purchaser's requirements.

2.0.0 Codes & standards

2.1.0 National Standards:

SL	Standard Number	Title
2.1.1	IS – 13573: 2011	Joints & Terminations of Polymeric Cables for working voltages from 6.6 kV up to and including 33 kV Performance Requirements and Type Tests
2.1.2	IS – 7098 Part 2 : 2011	Cross-linked Polyethylene (XLPE) Insulated PVC sheathed cables : Part 2 : For working voltages from 3.3 kV up to and including 33 kV
2.1.3	IS – 692: 1994	Paper insulated lead-sheathed cables (PILC) for rated voltages up to and including 33 kV specification
2.1.3	IS – 10810: 1984	Methods of test for cables
2.1.4	IS – 7098 Part 3 : 2019	Cross-linked polyethylene insulated thermoplastic sheathed Cables specification: Part 3 - For working voltages from 66 kV up to and including 220 KV

2.1.1 International Standards:

S No.	Standard Number	Title
2.2.1	EA TS – 09 – 13	Electricity Association – Technical Specification -09-13 Material component for use in Electric Power Cable Termination & Joints for System voltage above 1000 V up to 36 kV
2.2.2	IEEE – 48	Standards Test Procedures and requirements for high voltage alternating current cable termination
2.2.3	IEC – 60183	Guide to the selection of high voltage cables
2.2.4	IEC – 885 Part 1-3	Electric test methods for electric cables
2.2.5	IEC – 60840	Power cable with extruded insulation and their accessories for rated voltage above 30 Kv (Um=36 kV) up to 150 KV (Um=170 kV) – test methods and requirements.

3.0.0 Cable Construction

Normal sizes of XLPE cables used in BSES system and the construction features of these cables are indicated below:

a. 11 kV, 3-core x 150 sq mm AL
b. 11 kV, 3-core x 300 sq mm AL
c. 11 kV, 3-core x 400 sq mm AL
d. 11 kV, 3-core x 400 sq mm AL(OFC Embedded)
e. 11 kV, 1-core x 1000 sq mm AL
f. 11 kV, 1-core x 150 sq mm AL HTAB with copper metallic screen
g. 11 kV, 1-core x 150 sq mm AL HTAB with Aluminium wire metallic screen
h. 11 kV, 1-core x 95 sq mm AL HTAB with copper metallic screen
i. 11 kV, 1-core x 95 sq mm AL HTAB with Aluminium wire metallic screen
j. 33 kV, 3-core x 400 sq mm AL
k. 33 kV, 3-core x 400 sq mm AL (OFC Embedded)
l. 33 kV, 1-core x 1000 sq mm AL
m. 66 kV, 1-core x 630 sq mm AL
n. 66 kV, 1 core x 1000 sq mm AL
o. 66 kV, 3-core x 300 sq mm AL
p. 66 kV, 3-core x 300 sq mm AL(OFC Embedded)

PILC type Cables:

3-core 240 or 300 sq. Mm. Al

3.1.0	Conductor	For XLPE : a) Electrolytic Grade stranded Aluminium Conductor / Annealed Copper Conductor b) Grade: H2/ H4 as per IS: 8130/84 (For Al) c) Shape: Compacted Circular d) Class 2 For PILC : a) 11 kV : sector-shaped b) 33Kv: oval-shaped
3.2.0	Conductor Screen	For XLPE : Extruded Semi Conducting material For PILC : 11 kV : no conductor screen 33 kV : carbon paper
3.3.0	Insulation	For XLPE: Extruded TR XLPE For PILC: Layers of impregnated papers

3.4.0	Insulation Screen	**Non Metallic Screen:** For XLPE Insulated cable: a) For 11, 33 U/G cable and HTAB cable - Freely strippable Semi Conducting (without application of heat) b) For 66kV cable - Firmly bonded semi conducting **Metallic Screen:** a) For For 11, 33 & 66 Kv U/G cable – Copper Tape b) For HTAB – option 1 – Copper Tape (old installations) and option 2 – Aluminium wire (new installations) For PILC : a) 11 kV : absent (Belted) b) 33kV: metallised paper tape
3.5.0	Water Swellable Tape	For XLPE: Semi-conducting Water Swellable Tape shall be provided under the copper tape on each core. For PILC : not applicable
3.6.0	Filler	For XLPE: All interstices, including centre interstices filled by PP filler. Note- In special cases, for 66kV 3CX300 sqmm, 33kV, 3CX400 and 11kV 3CX400 cable are with-36 nos. Single mode and 12 nos. Multi modes OFC are also inbuilt as filler.Requirement of cable joint kit with OFC shall be fulfilled as per tender requirement For PILC : a) 11 kV : Crushed paper filler b) 33kV: Jute twine
3.7.0	Over all three cores	XLPE : Binder tape PILCA : 11 kV : belt paper 33kV: Copper Woven Fabric tape
3.8.0	Inner Sheath	For XLPE: Extruded Inner Sheath of Black PVC type ST-2. For PILC : Lead alloy sheath
3.9.0	Bedding Tape	For XLPE: not applicable For PILC: two layers of paper, followed by compounded (bituminized) cotton tape.
3.10.0	Copper Woven Fabric Tape (CWF tape)	For XLPE : not applicable For PILC : a) 11 kV : absent (Belted cable) b) 33 kV : applicable for screened cable
3.11.0	Armour	For XLPE : a) Galvanised Steel round Wires/ Galvanised steel flat strip armour (For 3 core cables) b) Hard drawn Aluminium Wire (For 1 core cables) c) Aluminium or lead sheathed for 1Core 66kV cables For PILC : a) 11 kV double steel tape armour
3.12.0	Binder Tape	For XLPE: Rubberised cotton tape

3.13.0	Outer Sheath	For XLPE: Extruded outer sheath of PVC (ST-2) for 11 kV/ 33 KV and HDPE for 66kV Cable with termite- repellent. For 66kV Cable- HDPE extruded semicon layer or HDPE with graphite layer. For PILC : compounded (bituminised) Jute/PVC
3.14.0	HTAB Cable (1CX150 and 1CX95) core construction	Aluminium conductor-conductor semicon screen- TR XPLE insulation-insulation semicon screen–Water Swell-able tape –Round wire armou installation) / Copper Tape (old installation)) Water Swell-able tape-outer sheath

4.0.0 Cable Termination Kits

General Technical Requirements for Cable Termination Kits are as follows:

4.1.0	Scope	Design, manufacture, testing and supply of Cable Termination Kits for H. T. Power Cables.
4.2.0	Functional Requirements	
4.2.1	Conductor Connection	

Voltage Grade	Cable Size	Application	Material of Lug	Connection Method
11 kV	3Cx150, 3Cx300 and 3Cx400 sq mm	Indoor	Bi-Metal	Crimping
		Outdoor	Bi-Metal/ Aluminium as per tender requirement	Crimping
	1Cx1000 sq mm	Indoor	Aluminium	Crimping
		Outdoor	Aluminium	Crimping
HTAB (indoor not required)	1Cx95	Outdoor	Aluminium	Crimping
	1Cx150	Outdoor	Aluminium	Crimping
33 kV	3Cx400 sq mm	Indoor	Aluminium	Crimping
		Outdoor	Aluminium	Crimping
	1Cx1000 sq mm	Indoor	Aluminium	Crimping
		Outdoor	Aluminium	Crimping
66 kV	3Cx300	Indoor	Aluminium	Crimping
		Outdoor	Aluminium	Crimping
	1Cx630, 1Cx1000 sq mm	Indoor	Aluminium	Crimping
		Outdoor	Aluminium	Crimping

* For Bimetallic Lug Copper portion shall be tinned

		a) For GIS cable termination kits: Plug in type, Conductor connection assembly shall be by standard method of split, silver-plated copper cone and pressure-fit contact assembly or as per manufacturer's standard. b) Top corners of all lugs shall be circular shape not rectangular. Refer Annexure F for details.(Except GIS kit)
4.2.2	Stress Control System	a) The earthed insulation screen of an XLPE cable is terminated at a suitable distance from the conductor. b) The tube is in electrical contact with insulation screen. c) Impedance of the tube shall be constant up to an operating temperature and shall be within the range $1x10^{08}$ ohm-cm to $8x10^{08}$ ohm-cm. d) Length of stress control tube for 11 kV and 33 kV shall be 130 mm and 260 mm respectively or according to insulation tube length. For 66kV termination kits, stress control tube shall be as per type tested design. e) The physical and electrical properties shall conform to ESI 09: 13. f) For GIS cable termination kits Stress control shall be by means of a polymeric stress cone. External profile of the cone shall match inner profile of GIS epoxy bushing. Vendor shall specify the material (EPDM / Silicone) of the cone.
4.2.3	Insulation Protection	a) XLPE insulation shall be protected by means of an outer tube, resistant to tracking and weathering. b) One end of the tube shall be coated internally with red sealant mastic for a length of 50 mm. c) Physical and Electrical properties shall conform to ESI 09: 13. d) Insulation Tube length for termination- shall be 650 mm for both Indoor and Outdoor Termination kits of 11kV, 3CX150, 3CX300 and 3CX400 sqmm cable. All other accessories related to termination shall be according to 650mm insulation tube length.
4.2.3.1	Outer Anti-tracking Tube	Outer length of the tube shall be controlled by providing creepage Extension Shed having the same material composition as the tube. These lengths are given in the table below: Creepage distance shall be 31mm/kV minimum.
4.2.3.2	OFC (66kV, 3CX300 sqmm , 33kV, 3Cx400 sqmm and 11kV, 3Cx400 sqmm cable)	Termination kit for OFC (36 single mode and 12 nos. Multi mode) shall be supplied along with termination kit.

Cable System		Length of tube (mm)		Creepage Extension Shed (No.)	
Voltage	Cores	Indoor	Outdoor	Indoor	Outdoor
11 kV	3 – core	650	650	Nil	2

	1 – core	340	340	NIL	2
33 kV	3 – core	800	1200	2	5
	1 – core	600	600	2	5

4.2.3.3	Oil Barrier Tube (applicable for PILC cable termination)	a) Transparent tube is used for restoring the insulation provided by belt paper, which is terminated at the crotch. b) 33 kV PILC Termination: The oil barrier tube provides an oil-resistant layer to contain impregnating compound within, thus preventing anti-tracking tube coming in contact with the impregnating compound.
4.2.4	Environmental Sealing System	a) Red Sealant Mastic Tape: This tape, used for sealing at ends, shall be synthetic rubber-based and resistant to tracking and weathering. Sufficient quantity of this tape shall be provided. b) Lug-sealing Sleeve: It shall have the same material composition as outer anti-tracking tube. The sleeve shall be fully coated internally with red sealant mastic tape. Length of the sleeve shall be so as to cover half length of the lug barrel and an equal length of track-resistant tube. c) Conductive Break-out: It shall be provided over the crotch for 3-core cables. The break-out base shall overlap PVC outer sheath by a 50 mm. Minimum. d) For GIS termination kits : Environmental sealing of cores below the switchgear shall be by means of a trifurcation kit, consisting of heat shrinkable conductive break-out and heat-shrinkable conductive tube of total length of 6 metres supplied in one roll.

4.2.5	Earth Bond System	Minimum Armour Fault Current Carrying capacity of cbles is as following: 11 kV U/G Cable – 11 kA for 1 sec 33 kV Cable – 31.5 kA for 1 sec 66 kV Cable – 31.5 kA for 1 sec 11 kV HTAB Cable – 11 kA for 1 sec Fault current requirement shall be met by Tinned copper braid as per following: 11 kV U/G cables – Three No's 25 sq mm each 33 kV Cable – Four No's of 50 sq mm each 66 kV Cable – Four No's of 50 sq mm each HTAB Cable with copper tape metallic screen – Three No's of 25 sq mm each Length of the copper braided conductor shall be 750 mm. Each copper braided conductor shall be supplied with copper lug, crimped at one end For HTAB Cable with Aluminium wire metallic screen – Tinned copper braid is not required. 1 No's of Aluminium crimping lug of 120 sq mm cross section area shall be provided instead
4.2.6	Suppression of electrical discharges	Following materials are required for use during cable termination : a) Silicone-based compound Required for filling-in minute services/ surface cracks over XLPE insulation. b) Polymeric mastic Required for application over semicon screen, for, eliminating any air-entrapment at any cut point on the surface. It should have sufficient elongation and electrical properties compatible with stress control tube.
4.2.7	Installation. Instruction Sheet	It shall be in English and Hindi language and shall be provided inside every kit.
4.2.8	Paper Measuring Tap	Required for use during cable preparation / terminations.
4.2.9	Identification Tag (for traceability)	a) An aluminum pouch with paper tag & sealing arrangement at one end shall be provided. b) This tag is required to be tied over the cable at one side of the joint. c) The paper tag shall give following information 1) Vendor kit designation 2) Division 3) Breakdown ID/Shutdown ID/Scheme No. 4) Cable section 5) Type of joint 6) Size of Joint 7) Make of joint 8) Voltage class

		9) Serial no. of kit 10) Vendor lot & batch no 11) Month & year of manufacturing 12) Date of installation 13) Name of jointer 14) Name of vendor supervisor 15) Name of BSES supervisor 16) Remarks In addition to above Stainless Steel Tag shall be provided with following details for straight through joint a. Manufacturing month and year (MM/YY format) b. Manufacturer name i.e Comp c. Manufacturer own sl no for future tracing
4.3.0	Technical Particulars	Vendor shall submit Guaranteed Technical Particulars (GTP) as per Annexure A.
4.4.0	Type Tests	i. Termination Kit shall be of type-tested quality from CPRI/ERDA/KEMA/CESI as per the BIS/IEC/IEEE within last 5 years. ii. In case of type test is more than 5 years old but less than 10 years old, bidder has to give undertaking that there is no changes in design. iii. In case of type test report is more than 10 years old, bidder has to conduct type test from CPRI/ERDA/KEMA/CESI as per the BIS/IEC/IEEE without any cost implications to BSES
4.5.0	Testing & Inspection	
	a) Tests	All the routine and acceptance tests shall be carried out as per ESI guidelines. (Also refer Annexure -C)
	b) Inspection	1) Buyer reserves the right to witness all tests specified on individual H. S. components, Moulded components or completed Cable Termination Kit. 2)Buyer reserves the right to inspect Cable Termination Kit at the Seller's works at any time, prior to dispatch, to verify compliance with the specification. 3) In-process and final inspection call intimation shall be given in 10 days advance to purchaser.
	c) Test Certificates	Three sets of complete Test Certificates (Routine & Acceptance tests) shall be submitted along with the delivery of Cable Termination Kits.
4.6.0	Documents	"Documents" refer to Documents, Data, Manuals, etc. (Scanned copy of signed documents also shall be part of entire soft file (e-file) or CD.)

4.6.1	Along with the Bid	Vendor shall submit signed 3 sets (plus 1 set of soft copy) of following documents: a) GTP (duly filled-in) (as per Annexure - A). b) Cross-sectional drawings for components Assembly c) Type Test Certificates d) Complete Catalogue and Instructions. e) Any other document.
4.6.2	After Award of Contract	Vendor shall submit signed 2 sets (plus 1 set of soft copy) of above mentioned documents within 15 days, for Purchaser's approval.
4.6.3	"As-Built" documents	Final signed "As-built" documents for the equipment in 3 sets (hard copy), 1 no. soft copy and 1 no. CD. These documents shall include signed Routine & Acceptance Test Certificates also.
4.7.0	Packing, Marking, Shipping, Handling and Storage	Every component/kit/box shall be properly sealed/ packed for protection against damage.
a)	Identification Labels:	Markings / Labels shall be on both sides of every packed box. 1) Identification number/type designation (as per manufacturer's standard) 2) Voltage grade, size, description of the Kit (including the voltage grade, size, type of the cables, for which it is to be used) 3) Batch no., lot no., etc. 4) Quantity 5) a) Purchase Order no. & date b) Purchaser's name c) BSES's SAP code number 6) Weight (kg) of each Cable Termination Kit and of each box containing kits. 7) Manufacturer's name 8) Month & Year of Manufacturing 9) Date of packing, Shelf life (if applicable) 10) In case, the termination kit is for RMU, following text shall be written in bold letters, with higher font size : "For RMU Application".
b)	Transit damage	The seller shall be responsible for any transit damage due to improper packing.

5.0.0 Quality Assurance (QA)

5.1.0	Vendor's Quality Plan (QP)	To be submitted for Purchaser's approval.
5.2.0	Sampling Method	Sampling Method for quality checks shall be as per manufacturer's standard practice / ESI guidelines and Purchaser's prior approval shall be taken for the same.
5.3.0	Inspection Hold-Points	To be mutually identified, agreed and approved in Quality Plan.

6.0.0 Deviations

6.1.0.	Deviations	a) Deviations from this specification shall be listed by bidder clause wise along with optional offer and has to submit the list along with bid./quotation. BSES will review the deviations and if BSES is agreed with the deviation, seller has to take written confirmation from BSES on deviation during tender evaluation.. b) In the absence of any list of deviations from the Seller with bid as well as written confirmation from BSES on deviations, it will be assumed by the Buyer that the Seller complies with the Specification fully. c) Any deviations mentioned in any other submitted bid documents (i.e.in filled GTP, Catalog, BSES old approval, buyer's/seller's standards etc) by seller without separate deviation sheets will not consider as a deviation from this tech spec at any stage of contract.

7.0.0 Delivery

7.1.0.	Delivery	Despatch of Material: Vendor shall despatch the material, only after the Routine Tests/Final Acceptance Tests (FAT) of the material witnessed/waived by the Purchaser, and after receiving written Material Despatch Clearance (MDC) from the Purchaser.

8.0.0 Inspection Expenses

Not Applicable

9.0.0 Penalty

Joint/Termination failure under warranty in regards to poor quality joint, poor work man ship, etc. shall be in the account of vendors. All kind of losses due to Joint/Termination failure shall be recovered from vendor.

Annexure – A: Guaranteed Technical Particulars (GTP)

The Seller is deemed to have examined all parts of the Specification documents and to have been fully informed, as to the nature of work and the conditions related to its performance.

S No.	Description	Purchase requirement	Vendor's data
1	Manufacturer's name		
2	Purchase Order no. & date		
3	Guarantee Period (minimum)	60 Months (from date of commissioning) / 66 Months (from date of receipt at Purchaser's store), whichever is earlier	
4	Applicable IS / IEC Standard followed by Vendor (incl. type test standard)		
5	Voltage Grade (kV)		
5.1	Lightning Impulse Voltage Withstand Test		
5.2	4Uo AC voltage withstand test for 4 hours	To be conducted on Installed joint at works	
6	Continuous operating temperature	90 deg. C	
7	Functional Requirements		
7.1	Method of Stress Control and Discharge Suppression		
7.2	Method of Insulation build-up and screening		
7.3	Method of earth bond a) Size and no. of braids b) Size of armour support c) No. of hose clips		
7.4	Method of mechanical protection a) for 3-core Cable b) for 1-core Cable		
7.5	Method of protection against corrosion (type & coating thickness of protective layer on steel mat)		
7.6	Method of conductor continuity a) For crimping connector b) For mechanical connector		

8	Description of items in the Kit, which are imported /sourced From Principal /Sub-suppliers		
9	Names of items in the Kit and their respective shelf life (months I years)		
10	Kit Content Table (KCT) enclosed? (Refer Annexure — B)	Yes / No	
11	Drawing for connector (ferrule) enclosed	Yes / No (If yes, mention the document reference)	
12	Is Annexure - D (Technical Deviation Sheet) duly filled-in?		
13	Packing (Qty) i) Packing of every Kit h) Group Packing	1 no -- No. of Kits per Box -- No. of Boxes	
14	Installation Procedure enclosed?	Yes / No (If yes, mention the document reference)	
15	Quality Assurance Plan (QAP for raw materials, in-process inspection, factory testing) is enclosed?	Yes / No	
16	Whether all heat-shrinkable and moulded components of the kit meet the requirements of and have been tested in accordance with EA TS -09-1 3.(for heat-shrinkable joints)	Yes / No (If yes, details of test report no. /Date /name of test laboratory to be mentioned.)	
17	Type Test Reports (TTR) (Relevant test report no. & date, With type, size, other details of each type of Kit.) a) Prepared Joint: CPRI TTR as per BIS / IEC enclosed? b) Loose Components: CPRI TTR as per EA TS 09-13 enclosed?	 Yes/No Yes/No	

18	Printing details on each of the Heat- shrinkable and Moulded components	(Mention the text, presently printed on each of the component)	
19	OFC kit (For OFC embedded cable only 66Kv, 3CX300 sqmm , 33Kv, 3cx400 sqmm and 11kv, 3cx400 sqmm)	Yes/no	

Annexure – B: Kit Content Table (KCT)

Vendor shall submit KCT as a consolidated table, consisting of all data, such as:

A. Heading

1. Voltage grade, size, description of the Kit
(Including the voltage grade, size, type of the cables, for which it is to be used)

2. Type designation (as per manufacturer's standard)

B. Details / Parameters

(For each component/item of the KCT)
1. Lot no. /Batch no., etc.
2. Item number (manufacturer's standard)
3. Description
a) Material, type, make and grade
b) Dimensions cross sectional area
c) Colour,
d) Other description, if any
4. Function of the item
5. Quantity
6. Make/Name/Location of manufacturer/sub-vendor
7. a) Minimum supplied (or in expanded form) diameter
   b) Maximum freely recovered diameter
8. a) Minimum supplied (or in expanded form) thickness
   b) Maximum freely recovered thickness

C. Notes on the KCT

Markings, printings, other details for individual/group of components are to be mentioned on KCT. For example:
a) Printing of item code, size, batch no., etc.
b) Printing on components
c) Other embossing or engraving, it any.

(Note: Vendor may attach an Annexure, for any additional information, if required.)

Annexure – C: Routine and Acceptance Test

A. Visual Examination

Condition of selected items / components, as per sampling method, shall be recorded. Some of the normal check-points can be as follows:

1. Every component shall be verified in quantity and description as per KCT.
2. All items shall be free from any defects, pin holes, cracks, etc.
3. Metallic components to be free from sharp edges.

B. Measurements of Dimensions

(Required / observed dimension — length, diameter, etc.)

1. Supplied dimensions
2. Recovered dimensions

C. Destructive Testing

On various heat-shrinkable / moulded components of ready Kits

(Items 3 and 4 are applicable only for heat-shrinkable components)

1. Tensile Strength
2. Wall Thickness Ratio
3. Heat Shock
4. Longitudinal Change, after full recovery
5. Ultimate Elongation
6. Low Temperature Flexibility
7. Dielectric Strength
8. Volume Resistivity

D. Routine Test Reports (RTR)

(Typical)

Each RTR shall clearly indicate P.O. no. & date and also BSES's SAP code no. RTR shall record the serial numbers of the kits selected, as per vendor's sampling method. Following details, besides vendor's/manufacturers standard check-points, shall appear in every RTR.

Annexure – D: Technical Deviation Sheet

Sr No.	Clause No.	Deviation

Annexure – E: Service Conditions

(Atmospheric conditions at Site)

1	Delhi	
a)	Average grade Atmospheric Condition:	Heavily Polluted, Dry
b)	Maximum altitude above sea level	1000 M
c)	Ambient Air temperature	Highest 50 deg C, Average 40 deg C
d)	Minimum ambient air temperature	0 deg C
e)	Relative Humidity	90 % Max
f)	Thermal Resistivity of Soil	150 Deg. C cmm
g)	Seismic Zone	4
h)	Rainfall	750 mm concentrated in four months

Annexure – F: Bimetallic Aluminium / Copper Lug

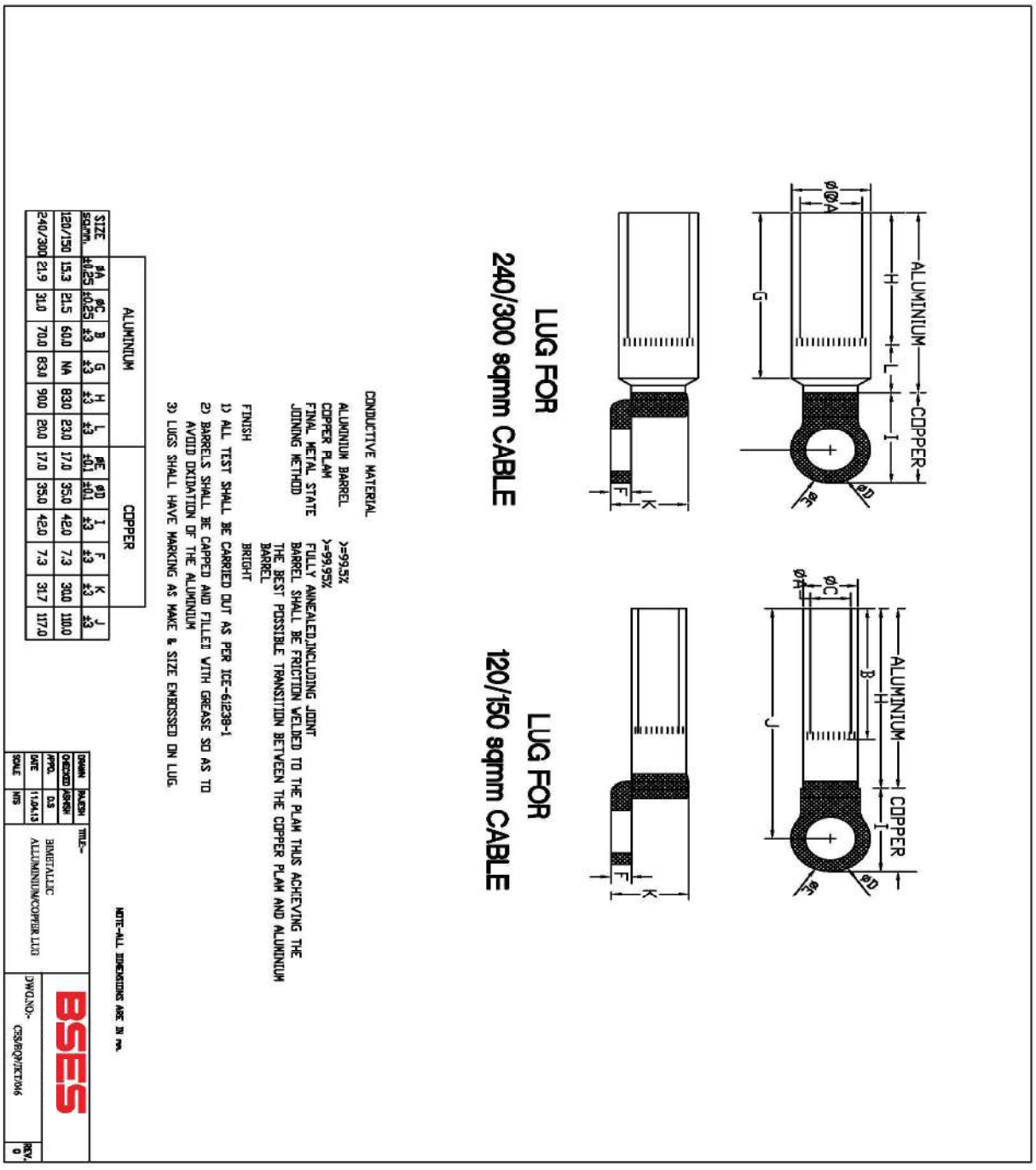

SIZE sq.mm.	ALUMINIUM							COPPER			
	øA ±0.25	øC ±0.25	B ±3	G ±3	H ±3	L ±3	øE ±0.1	øD ±0.1	I ±3	F ±3	K ±3	J ±3
120/150	15.3	21.5	60.0	NA	830	230	17.0	35.0	42.0	7.3	30.0	110.0
240/300	21.9	31.0	70.0	834	900	200	17.0	35.0	42.0	7.3	31.7	117.0

Annexure – G: Aluminum/Copper Lug For XLPE Cable

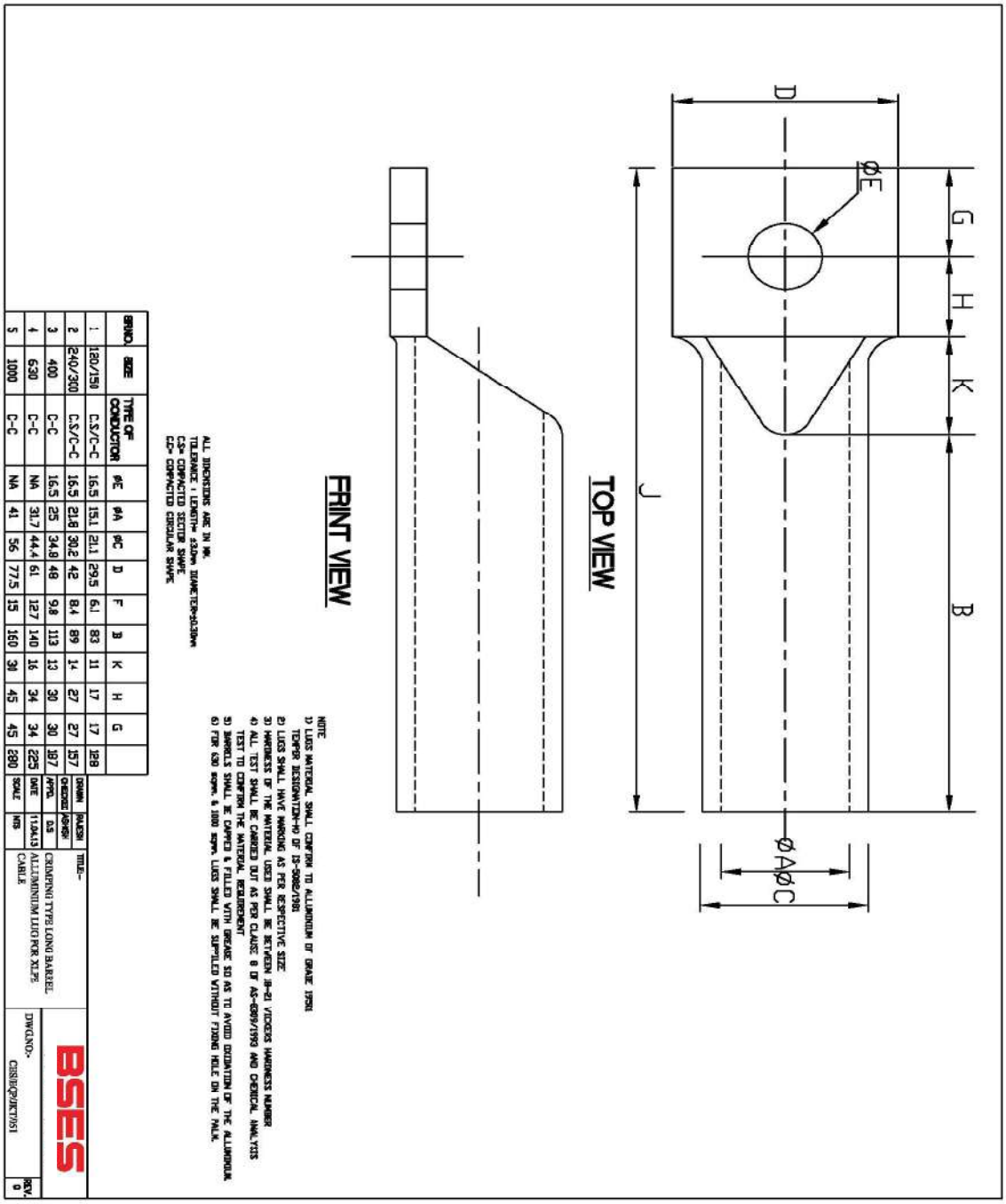

NOTE
1) LUGS MATERIAL SHALL CONFORM TO ALUMINIUM OF GRADE 19201 TEMPER DESIGNATION-H0 OF IS-5082/1981
2) LUGS SHALL HAVE MARKING AS PER RESPECTIVE SIZE
3) HARDNESS OF THE MATERIAL USED SHALL BE BETWEEN 28-32 VICKERS HARDNESS NUMBER
4) ALL TEST SHALL BE CARRIED OUT AS PER CLAUSE 8 OF AS-6809/1990 AND CHEMICAL ANALYSIS TEST TO CONFIRM THE MATERIAL REQUIREMENT
5) BARRELS SHALL BE CAPPED & FILLED WITH GREASE SO AS TO AVOID OXIDATION OF THE ALUMINIUM
6) FOR 630 sqmm & 1000 sqmm, LUGS SHALL BE SUPPLIED WITHOUT FIXING HOLE ON THE PALM.

ALL DIMENSIONS ARE IN MM.
TOLERANCE : LENGTH= ±3.0mm DIAMETER=±0.50mm
CS= COMPACTED SECTOR SHAPE
CC= COMPACTED CIRCULAR SHAPE

SRNO.	SIZE	TYPE OF CONDUCTOR	ØE	ØA	ØC	D	F	B	K	H	G	
1	120/150	C.S./C-C	16.5	15.1	21.1	29.5	6.1	83	11	17	17	128
2	240/300	C.S./C-C	16.5	21.8	30.2	42	8.4	89	14	27	27	157
3	400	C-C	16.5	25	34.8	48	9.8	113	13	30	30	197
4	630	C-C	NA	31.7	44.4	61	127	140	16	34	34	225
5	1000	C-C	NA	41	56	77.5	15	160	36	45	45	280

DRAWN	RAJESH	TITLE-
CHECKED	ASHISH	CRIMPING TYPE LONG BARREL ALUMINIUM LUGS FOR XLPE CABLE
APPD.	DJS	
DATE	11/04/13	
SCALE	NTS	DWG.NO- CESI/EQP/ELECT/051

BSES

REV- 0

Annexure-H

SOP FOR REPAIRING OF CABLE FAULT (Shall be part of PO)		
Sl. No.	Activity	Responsibility
Initiation		
1	Identify and isolate fault and inform GNIIT in case of cable fault	Break down team
2	Updation of the details in OMS against respective feeder tripping event.	GNIIT
Fault Location		
1	Information sent to FLC team and SDO.	GNIIT
2	Mobilize FLC team and cable jointing contractor.	SDO
3	Identification of fault location	FLC Team
Preparation for Jointing		
1	Seeking permission from road owning agency	SDO
2	Payment of RR charges to Road owning agency	Finance
3	Digging	Cable jointing contractor
4	Cut faulty section and Pre-test (HV test) cable for multiple fault	Cable jointing contractor
5	BOQ estimation for jointing work (type, size and length of cable, type of jointing kit)	Cable jointing contractor
6	Filling material reservation slip (MRS) in SAP	SDO
7	Issuing and transporting material from store.	Cable jointing contractor
Jointing		
1	Cable preparation (overlap length of cable, slide of armour, build up with inner sheath etc)	Cable jointing contractor (for jointing details refer to manufacturer instruction manual)
2	Copper tape shields	
3	Core preparation	
4	Location of parts in completed joints	
5	Earthing of connection	
6	Completion of joints	
7	Take Photographs before, during and after jointing and send to CES	SDO
8	Supervision during jointing	SDO
9	Sending failed joint to Division store	Cable jointing contractor
Completion and reporting		
1	Intimate to breakdown team about joint completion.	Cable jointing contractor
2	Conduct HV test	Break down team
3	Restore of Supply through jointed cable	Break down team
4	Backfilling, compaction of excavated soil and removing of excess earth from the site	Cable jointing contractor

5	Completion information in Job Card (Details of work done, material consumption, location, feeder name and joint tag no., date, supervisor name, jointer name) sent to SDO	Cable jointing contractor
6	Above information sent to GNIIT	SDO
7	Send information about GPS location of Cable fault to GIS	SDO
8	Daily report of cable jointing to CES	Division Head
9	Updating of information in OMS including supervisor name, jointer name, feeder name	GNIIT
10	Information to include GPS location of cable fault.	GNIIT

Special Note-

1) Joints to be done preferably during day. In case of constraints, DGM (O&M) to authorize for night time jointing with supervisor
2) Daily joint report to be shared with CES
3) Bi-monthly analysis of faulty joint for ensuring warranty compliance to be organized at circle level by contractor in presence of DGM (O&M) and CES
4) Certification of job card for payment by DGM (O&M) subject to OMS compliance CES to check any gaps.
5) After completion of jointing (33kV and 66kV), all the joints shall be covered with RCC coffin. Coffin shall be filled with white sand complete from the hole provided at the top of the coffin.

BSES

Technical Specification of Aluminum Lugs and Ferrules

Specification no – BSES-TS-11-ALF-R0

Rev:		0
Date:		04 Apr 2022
Pages:		11
Prepared by	Jeena Borana	
	Vani Sood	
Reviewed by	Srinivas Gopu	
	Amit Tomar	
Approved by	Gaurav Sharma	
	K. Sheshadri	

INDEX

1.0 SCOPE OF SUPPLY 3
2.0 STANDARDS & CODES 3
3.0 SERVICE CONDITIONS 3
4.0 MAJOR DESIGN PARAMETERS 3
5.0 MATERIAL 5
6.0 MARKING 5
7.0 TESTING & INSPECTION 5
8.0 DEVIATION 5
9.0 PACKING & DELIVERY 6
10.0 DOCUMENTS SUBMISSION 6
11.0 DRAWINGS 7

1.0 SCOPE OF SUPPLY

The specification covers design, manufacturing, testing of Aluminum Lugs and ferrules at manufacturers works before dispatch. Packing, delivery of material and submission of documents/test reports to purchaser.

2.0 STANDARDS & CODES

2.1	IS: 8308 -1993	Compression type tubular in-line connectors for Aluminum conductors of insulated cable
2.2	IS:5082 - 1998	Wrought Aluminum & Aluminum alloy bars, rods, tubes, sections, plates & sheets for electrical Applications
2.3	IEC: 61394	Overhead lines - Requirements for greases for aluminum, aluminum alloy and steel bare conductors
2.4	IS:8309 -1993	Compression type tubular terminal ends for aluminum conductors of Insulated cables
2.5	IS: 191- 2007	Specification for copper

3.0 SERVICE CONDITIONS

3.1	Location	Outdoor
3.2	Average grade atmosphere	Heavily polluted, Dry
3.3	Maximum altitude above sea level	1000M
3.4	Ambient air temperature	Highest 50Deg C Average 40Deg C
3.5	Minimum ambient air temperature	0 Deg C
3.6	Relative Humidity	100%
3.7	Rainy month	June to October
3.8	Maximum Rainfall (mm)	1450
3.9	Wind Pressure (Kg/Sq.m)	195
3.10	Seismic Zone	Zone IV as per IS : 1893

4.0 MAJOR DESIGN PARAMETERS

4.1	Ferrule	An aluminum ferrule is an aluminum compression type tubular inline connector for aluminum conductors of insulated cables for rated voltages up to and including 1.1 kV. a) **In-Line Connector -** A connecting device accommodating two electrical conductors to form straight joint. b) **Transition/Reducer Connector -** A connecting device accommodating two electrical conductors of different sizes to form a transition joint.

4.2	General Design Parameters of Ferrule	a) Electrical conductivity: More than 60 % IACS Cleaning after manufacturing: Caustic soda cleaning b) Ferrule should be filled with oxidation inhibiting paste & sealed with caps
4.3	LT Aluminum Ferrule	a) Machine marking: Clear and distinct machine marking as specified in drawing on outer surface of ferrule to facilitate crimping. Total number of crimps should be as per drawing. b) No Knurling on inner surface of ferrule. c) Internal, external diameter & length of ferrule shall be as per drawing. d) Ferrule design suitable for conductor of type: Compacted Sector Shape
4.4	Lug	A connecting device with barrel accommodating respective conductor. Size of electrical cables for rated voltages up to and including 1.1kV. Aluminum Lug: An aluminum lug is essentially a connecting device for connecting aluminum conductor with aluminum bus bars.
4.5	General Design Parameters for Lug	a) Cleaning after manufacturing: Caustic soda cleaning. b) Barrels of the Lugs should be filled with oxidation inhibition paste & sealed with caps.
4.6	Aluminum LT lug	Size to be used for 10, 25, 50, 95, 150, 300, 630, 1000 sqmm: a) Machine Marking: Clear and distinct marking at specified distance on outer surface of lug to facilitate better crimping. b) No knurling on inner surface of the lug c) Internal diameter, external diameter, length of barrel, length of palm & other dimensions shall as per drawing. d) Electrical conductivity: Min. 60% IACS e) All corners shall be rounded off. All dimensions are in mm. Refer Drawing for dimension and permissible tolerances.

5.0 MATERIAL

5.1	Material for Lug and ferrule	a) Material of Lug and Ferrule shall be 99% Electrolytic grade Aluminum conforming to Aluminum of grade 19501 (Temper Designation-M) of IS 5082/1981. b) Hardness of the material used shall be between 18-21 Vickers Hardness Numbers.
5.2	Make	Raw Material make shall be Hindalco/Banco/Jindal Aluminum/BSES approved Reputed make

6.0 MARKING

6.1	Identification	For Ferrule: Type of cable to be connected, size and make shall be engraved on each ferrule. For aluminum Lug: Size of cable and make shall be engraved on each lug for Aluminum lug/Street light lug.

7.0 TESTING & INSPECTION

All the tests shall be carried out in accordance with IEC / IS standards.

7.1	Visual Check	The Ferrule & lug shall be visually checked and shall free from external defects.
7.2	Dimensional Check	The dimensional requirements shall be checked for Ferrule & Lug as per the drawing.
7.3	Acceptance Test	Following tests needs to be conducted by the vendor during inspection (value shall be followed as per IS/IEC) 1. Flattening 2. Electrical Conductivity 3. Resistivity 4. Physical properties (Tensile Strength and Hardness) 5. Two samples of similar size to be sampled for Temperature Rise test and chemical composition from the offered lot and shall be carried out from NABL approved Lab.

8.0 DEVIATION

Deviations from this Specification shall be stated in writing with the tender by reference to the Specification clause/GTP/Drawing and a description of the alternative offer. In absence of such a statement, requirements of the Specification shall be met without exception.

9.0 PACKING & DELIVERY

9.1	Packing	Packing to be done in transparent polythene bags of min.150 micron thickness so as to not get torn due to handling during packing/transit of lugs. Sealing should be done essentially with Heat sealers only.
9.2	Identification Labels	The pack should have a label indicating the a) Manufacturer's name b) SAP code number & PO. No. with date c) Month & year of manufacturing d) Size of Ferrule/lug with type e) Number of items f) "BSES Yamuna Power Ltd."

10.0 DOCUMENTS SUBMISSION

Document submission shall be as per the matrix given below. All documents/drawing shall be provided in soft copy for each section. Language of the documents shall be English only. Deficient/improper drawing submission may liable for rejection.

S.No.	Detail of Document	For Tender	For Approval/Review	Final Submission
10.1	Guaranteed Technical Particulars (GTP)	Required	Required	Required
10.2	Deviation Sheet, if any	Required	Required	Required
10.3	GA and Dimensional Drawing	Required	Required	Required
10.4	Manufacturer's quality assurance plan and certification for quality standards		Required	Required
10.5	Make of Raw Materials	Required	Required	Required
10.6	Inspection and test reports, carried out in manufacturer's works			Required
10.7	Routine Test Certificates			Required
10.8	Test certificates of all the raw materials			Required

11.0 DRAWINGS

ALUMINIUM TERMINAL LUGS

SNO.	SIZEMM^2	E ±0.1	A ±0.1	C ±0.1	D ±0.5	F ±0.1	B ±0.2	H ±0.5	G ±0.5	J ±0.6
1.	10MM^2	6.4	4.4	7.2	10	2.8	9	9	8	30

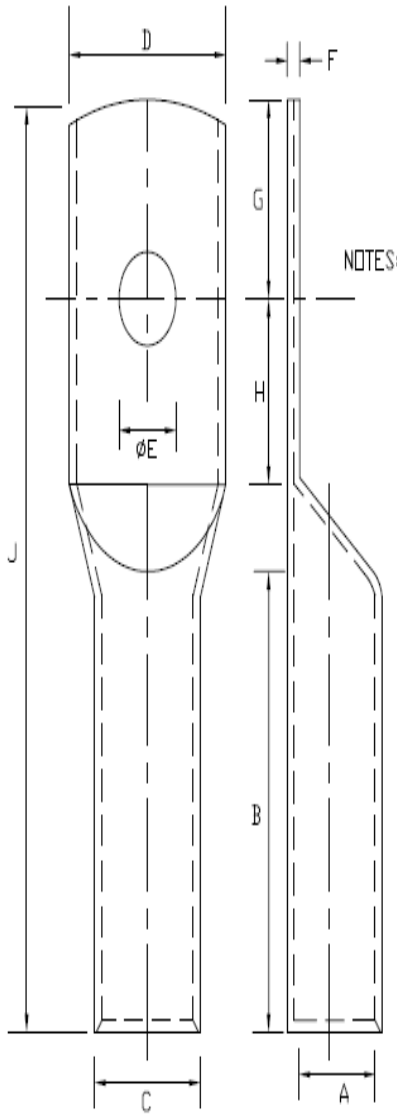

NOTES:- 1 ALL THE DIMENTIONS ARE IN MM

2 LUGS MATERIAL SHALL CONFIRM TO ALUMINUM OF GREAD 19501 AS PER IS 5082

3 LUGS SHALL HAVE MARKING AS PER RESPECTIVE SIZE AND 'BSES LOGO'

4 BARREL SHALL BE CAPED & FILLED WITH OXIDATION INHIBITENT SO AS TO AVOID OXIDATION OF THE ALUMINUM

5 CLEAR AND DISTINCT MARKING TO BE SPECIFIED ON BARREL LUG TO FACILITATE BETTER CRIMPING.

6 TWO SAMPLES OF SIMILAR SIZE TO BE SAMPLED FOR TEMPERATURE RISE TEST AND CHEMICAL COMPOSITION TEST ON EVENT OF ORDER.

7 ALL CORNERS SHALL BE ROUNDED OFF.

BSES

TITLE:-

Aluminum Tube Terminal Lug Long Barrel 10mm round conductor–Single Hole

DWG No.:-

ALUMINUM TERMINAL LUGS

SNO.	SIZEMM^2	E ±0.1	A ±0.2	C ±0.2	D ±1	F ±0.1	B ±1	H ±0.5	G ±0.5	J ±1
1.	25MM^2	8.4	6.8	12	18	5	32	12	9.5	60
2.	50MM^2	10.5	10	16	25	6	42	14.5	14	80
3.	95MM^2	13	13.5	22	32	8	56	18	15.5	102
4.	150MM^2	13	16.5	25	35	8	65	25	25	125

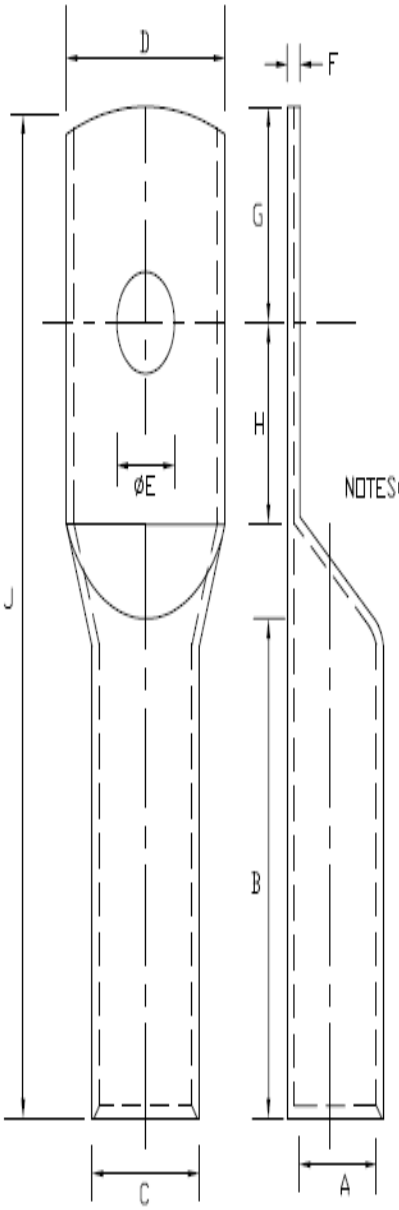

NOTES:- 1 ALL THE DIMENTIONS ARE IN MM

2 LUGS MATERIAL SHALL CONFIRM TO ALUMINUM OF GREAD 19501 AS PER IS 5082

3 LUGS SHALL HAVE MARKING AS PER RESPECTIVE SIZE AND 'BSES LOGO'

4 BARREL SHALL BE CAPED & FILLED WITH OXIDATION INHIBITENT SO AS TO AVOID OXIDATION OF THE ALUMINUM

5 CLEAR AND DISTINCT MARKING TO BE SPECIFIED ON BARREL LUG TO FACILITATE BETTER CRIMPING.

6 TWO SAMPLES OF SIMILAR SIZE TO BE SAMPLED FOR TEMPERATURE RISE TEST AND CHEMICAL COMPOSITION TEST ON EVENT OF ORDER.

7 ALL CORNERS SHALL BE ROUNDED OFF.

BSES

TITLE:-
Aluminum Tube Terminal Lug Long Barrel For Round conductor-Single Hole

DWG No.:

ALUMINIUM TERMINAL LUGS

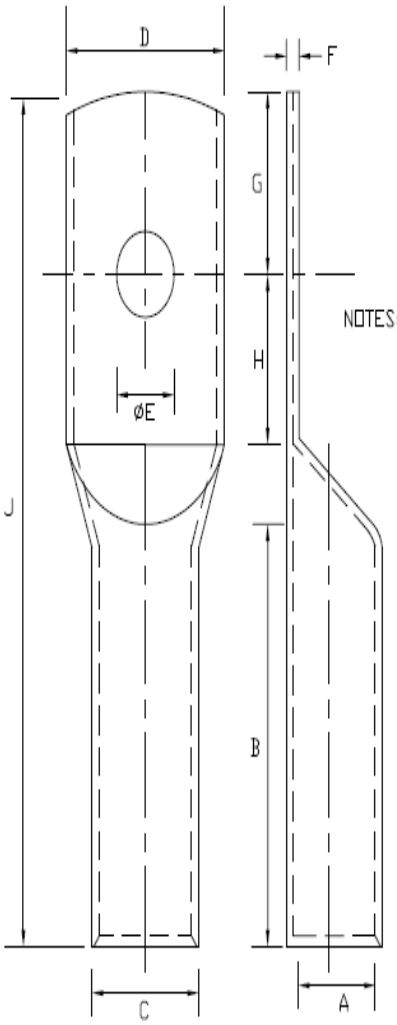

SNO.	SIZEMM²	E ±0.1	A	C	D	F ±0.2	B	H	G	J ±1
1.	1CX 300MM²	17	21.5-22	32-32.5	47.5-48	10	79-80	39.5-40	29.5-30	165
2.	4CX 300MM²	17	24.3-24.7	33.8-34.2	47.5-48	10	79-80	39.5-40	29.5-30	165
3.	400MM²	17	26-26.4	38.5-39	53.5-54	125	115	39.5-40	29.5-30	200

NOTES:- 1 ALL THE DIMENTIONS ARE IN MM

2 LUGS MATERIAL SHALL CONFIRM TO ALUMINUM OF GREAD 19501 AS PER IS 5082

3 LUGS SHALL HAVE MARKING AS PER RESPECTIVE SIZE AND 'BSES LOGO'

4 BARREL SHALL BE CAPED & FILLED WITH OXIDATION INHIBITENT SO AS TO AVOID OXIDATION OF THE ALUMINUM

5 CLEAR AND DISTINCT MARKING TO BE SPECIFIED ON BARREL LUG TO FACILITATE BETTER CRIMPING.

6 TWO SAMPLES OF SIMILAR SIZE TO BE SAMPLED FOR TEMPERATURE RISE TEST AND CHEMICAL COMPOSITION TEST ON EVENT OF ORDER.

7 ALL CORNERS SHALL BE ROUNDED OFF.

BSES

TITLE:-
Aluminum Tube Terminal Lug Long Barrel for 300sqmm & 400sqmm cable round and sector-Single Hole

DWG No.:

ALUMINIUM DIN TYPE TERMINAL LUGS

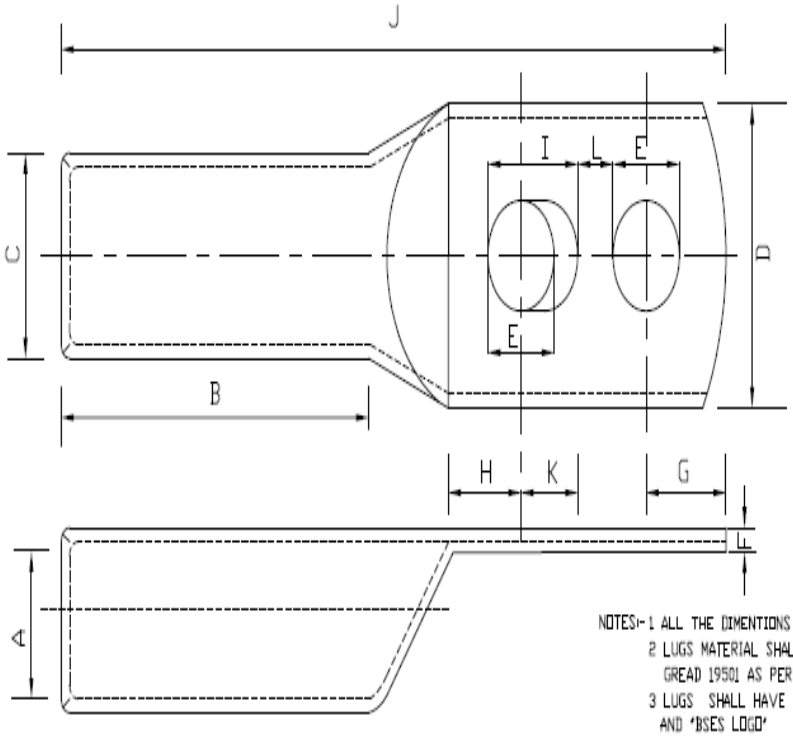

NOTES:- 1 ALL THE DIMENTIONS ARE IN MM
2 LUGS MATERIAL SHALL CONFIRM TO ALUMINUM OF GREAD 19501 AS PER IS 5082
3 LUGS SHALL HAVE MARKING AS PER RESPECTIVE SIZE AND 'BSES LOGO'
4 BARREL SHALL BE CAPED & FILLED WITH OXIDATION INHIBITENT SO AS TO AVOID OXIDATION OF THE ALUMINUM
5 CLEAR AND DISTINCT MARKING TO BE SPECIFIED ON BARREL LUG TO FACILITATE BETTER CRIMPTING
6 TWO SAMPLES OF SIMILAR SIZE TO BE SAMPLED FOR TEMPERATURE RISE TEST AND CHEMICAL COMPOSITION TEST ON EVENT OF ORDER.
7. ALL CORNERS SHALL BE ROUNDED OFF.

SNO.	SIZEMM^2	E ±0.1	A	C	D	B ±1	H	K	I	L	G	J ±1	F ±0.2
1.	630MM^2	18	31.5-32	44.5-45	63-63.5	120	36-36.2	25-25.2	34-34.2	16-16.2	24-24.2	245	12.5
2.	1000MM^2	20	43-43.5	56-56.5	77-77.5	140	38	26-26.2	36-36.2	16-16.2	25	270	13

BSES

TITLE:-
Aluminum Tube Terminal Lug Long Barrel–
for 630 & 1000 sqmm round conductor–Double holes

DWG No.:-

COMPRESSION TYPE ALUMINIUM TUBULAR IN-LINE CONNECTORS FOR NON TENSION CONNECTORS OF ALUMINIUM CONDUCTORS

SIZE	A	C	J
25	6.8–7.1	12.0–12.5	65–75
50	9.3–9.6	16–16.5	80–90
95	13.2–13.6	22–22.5	100–110
150	16.3–16.7	25–25.5	120–130
300	23.3–23.7	34–34.5	140–150
400	26–26.4	38.5–39	205–215
630	34–34.4	50–50.5	235–245

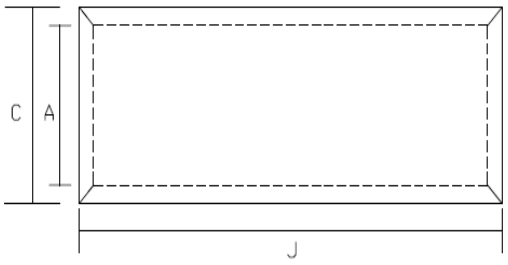

NOTES:-

1. ALL THE DIMENTIONS ARE IN MM
2. REFERANCE : SPECIFICATION AS PER TABLE 2 OF IS-8308
3. MATERIAL : ELECTROLYTIC GRADE ALUMINIUM AS PER IS: 5082
4. FINISH : NATURAL

BSES

TITLE:-
ALUMINIUM IN-LINE
CONNECTORS HEAVY DUTY

DWG No.:-

BSES

Technical Specification

For

66kV, Single core Cable

Specification no – BSES-TS-40-1C66-R0

Rev.		0
No. of Pages		31
Date		28 Apr 2022
Prepared by	Abhishek Vashistha	
	Gautam Deka/ Pronab Bairagi	28/04/22 28/04/2022
Reviewed by	Puneet Duggal	
	Amit Tomar	
Approved by	Gaurav Sharma	Gaurav
	Gopal Nariya	

INDEX

1.0 SCOPE 3

2.0 STANDARDS & CODES 3

3.0 SERVICE CONDITIONS 3

4.0 DESIGN FEATURES 4

5.0 INSPECTION & TESTING 7

6.0 SHIPPING, HANDLING & SITE SUPPORT 8

7.0 DEVIATIONS 9

Annexure – A Scope, Documentation and Delivery schedule 10

Annexure–B: Guaranteed Technical Particulars (Data by Supplier) 11

Annexure–C: List of Subvendor 18

Annexure–D: Drawing of Sealing End Cap 21

Annexure–E: Drawing of Cable pulling eye 22

Annexure–F: BSES format (typical) for Quality Assurance Plan QAP 23

Annexure–G: Testing and manufacturing process requirements w. r. t. TR- XLPE insulation 31

Annexure–F: Deviation format 31

1.0 SCOPE

The scope of supply includes Design, Manufacture, testing at manufacturer's works before dispatch, packing, delivery including unloading and stacking of 66kV Single Core cable complete with all accessories at site/store.

2.0 STANDARDS & CODES

Materials, equipment and methods used in the manufacture of Cable shall conform to the latest edition of following:

S No.	STANDARD	DESCRIPTION
2.1	IS–8130	Conductor for insulated electric cables & flexible cords
2.2	IS-5831	PVC insulation and sheath of electric cables
2.3	IS-3975	Mild steel wires strips and tapes for armoring cables
2.4	IS-5216	Guide for safety procedures and practices in electrical works
2.5	IS-7098 (Part – III)	Cross-linked polyethylene insulated thermoplastic sheathed cables specification.
2.6	IS – 10810	Methods of test of cables
2.7	IEC-60811	Common test methods for insulating and sheathing materials of electric cables and optical cables
2.8	IEC-60228	Conductor for insulated cables
2.9	IEC-60840	Power cable with extruded insulation and their accessories for rated voltage above 30kV up to 150kV- Test methods and requirements

3.0 SERVICE CONDITIONS

Cables to be supplied against this specification shall be suitable for satisfactory operation under the following service conditions-

3.1	Average grade atmosphere	Heavily polluted, Dry
3.2	Maximum altitude above sea level	1000M
3.3	Relative Humidity	100%
3.4	Ambient air temperature	Highest 50 Deg C Average 40 Deg C Minimum 0 Deg C
3.5	Operating temperature	0 Deg C - 50 Deg C
3.6	Rainfall	750mm concentrated in four months

4.0 DESIGN FEATURES

S No.	Parameters	Technical Requirements	Offered by Vendor
4.1.0	Manufacturing process	The cable shall be manufactured by "Triple head extrusion process". The conductor screen, Insulation & Insulation screen shall be co-extruded by onetime process to ensure homogeneity and reduction of voids in the insulation and the screening system of the cable, whereby enhancing the life of the cable. The cable shall be strictly manufactured by "DRY CURE and DRY COOLING " process.	
4.2.0	Conductor	Electrolytic grade aluminum conductor shall consist of flexibility class-2 in accordance with IS 8130/IEC 60228. The shape of conductor shall be compacted, stranded, and circular.	
4.3.0	Longitudinal water sealing of conductor	Shall be achieved by water swelling fibers in the interstices of the conductor. The fibers shall turn into jelly/swell, when in contact with water making the conductor water tight.	
4.4.0	Semi conducting separator tape	Semi-conducting separator tapes shall be applied over the conductor, suitable for continuous operating conductor temperature of 90^0C.	
4.5.0	Conductor screen	The conductor screen shall consist of extruded semi-conducting compound which shall be fully compatible with the conductor and extruded insulation. Outer surface of semiconductor screen shall be super smooth, cylindrical and firmly bonded to the overlaying insulation.	
4.6.0	Insulation	The extruded WTR - XLPE insulation shall be of very high degree of purity. The average thickness shall not be less than nominal value as given in annexure "B". The minimum thickness at any point shall not be less by more than 10% of the nominal value. Percentage eccentricity of the insulation shall not be more than10%.	
4.7.0	Insulation Screen	The insulation screen shall consist of extruded semi-conducting compound which shall be fully compatible with extruded insulation. Insulation screen shall be firmly bonded to the insulation.	

S No.	Parameters	Technical Requirements	Offered by Vendor
4.8.0	Make of insulation and semi conducting screen	For Insulation: WTR-XLPE of Dow/Borealis/Hanwa For Conductor & Insulation Screen: Semiconducting compound of Dow/Borealis/Hanwa Any deviation to above shall not be acceptable.	
4.9.0	Core	The ovality of the core shall not be more than 5%.	
4.10.0	Inner Longitudinal water sealing bedding	Semi-conducting water swell-able tapes shall be applied over the extruded semi-conducting insulation screening with a minimum overlap of 10%.	
4.11.0	Metal screening (if required to meet the short circuit rating)	The metallic screen shall consist of a layer of copper tape applied in helical form. Copper tape overlap: Minimum 10%	
4.12.0	Outer Longitudinal water sealing bedding (if metallic screening is provided)	Semi-conducting water swell-able tapes shall be applied over the metallic screen again with a minimum overlap of 10%.	
4.13.0	Metallic sheath	The metallic sheath shall be made of Corrugated aluminum sheathing with minimum thickness of 1.75mm and nominal thickness of 1.8mm, provided with high-viscosity bitumen-based compound coating, in conjunction with textile tape as carrier material for corrosion protection of the outer surface of corrugated aluminium sheathing. Further the corrugations shall be filled with compatible filler material to provide smooth round surface over the aluminium corrugated sheathing, so as to prevent ingress / traveling of water along the corrugations	
4.14.0	Outer Sheath	The outer sheath shall consist of extruded black colored HDPE type ST-7 with anti-termite protection. The Minimum thickness shall be 3.3 mm at any point. Nominal Thickness shall be 4 mm. Carbon black content shall be 2.5 ±0.5%	
4.15.0	Semi conductive layer over the	Extruded Semi conductive layer shall be either extruded or graphite coating.	

	outer sheath		
4.16.0	Cable Rating	The cable size shall be suitable to carry rated load current on 66 kV continuously without exceeding the maximum conductor temperature of 90^0 C.	
4.17.0	Drum Length	500 meter +/- 5% (short lengths not acceptable except the last length and minimum acceptable short length shall be 250 meters.). The Overall tolerance - 2 % for the total cable length of the entire order Manufacturer shall not be allowed to put two cable pieces of different short length in same cable drum.	
4.18.0	Embossing	The extruded outer sheath shall be embossed with meter marking at interval of 1 meter. Meter marking shall start from zero in every drum. The ”A” end meter marking and “Z” end meter marking and the drum lengths shall be printed on the drum flange along with other markings. The outer sheath shall also be embossed with (min.) a) Voltage designation b) Type of construction/cable code (e.g.A2X2Y) c) Number of core and nominal cross sectional area. d) Type of cable “Electric Cable” e) Manufacturers name & trademark f) Name of buyer (e.g.BSES) g) Month & year of manufacturing h) Batch no / Lot no. i) Sequential length marking j) Purchase order number & date k) ISI mark l) Individual Drum number Progressive sequential marking shall be start at zero for each drum	
4.19.0	Joints and Terminations	The Joints and Terminations to be offered with the cable shall be fully type tested as per IS 60840. The Joints and Terminations shall match all technical performance parameters of the specified cable. The Joints and Terminations would be either Heat Shrink or Cold-Shrink.	

5.0 INSPECTION & TESTING

S No.	Parameters	Technical Requirements	Offered by Vendor
5.1.0	Type test	The cable and the associated accessories like Joints and terminations of same voltage, design and number of cores shall be Type Tested from CPRI/ERDA as per IEC 60840/IS7098 (part-3) with latest amendments. Type test report (from CPRI/ERDA only) of not more than five (5) years old shall be submitted for the same type, size and voltage rating of the cable offered, along with the bid to qualify in the tender. All type tests shall be carried out in accordance with IEC-60840 / IS 7098 (part-3) and in accordance with the sequence prescribed therein. Type Test Required After Award of PO: Type test on one cable drum of each type/rating from any lot shall be conducted at CPRI/ERDA on sample basis as per relevant IS/IEC. Sample shall be sealed by BSES during inspection of cable. This type test is applicable subject to BSES requirement and cost shall be borne by BSES	
5.2.0	Routine test	a) Each drum length of cable shall be subjected to the tests as mentioned in IEC 60840, IS 7098 (Part-3), IEC 60229 and IS 10810 b) Impulse voltage test of one drum and Physical dimension of each and every layer along with component.	
5.3.0	Acceptance Tests	The sampling & acceptance tests shall be conducted as per IEC: 60840 / IS: 7098 (Part-3) and approved BSES QA plan for each lot of cable during the inspection of lot at manufacturer's works.	

5.4.0	Special tests	The following tests shall be carried out as special tests a) Conductor examination as per IEC-60840 for conformance of IEC 60228/IS 8130. b) Measurement of thickness of insulation as per Clause 10.6 of IEC- 60840 and Clause 8 of IEC-60811-1-1./ IS 10810 part 6 c) Void and contamination as per IS 7098 (Part-3) d) Sheath Integrity Test e) Carbon black content test in Inner sheath & Outer Sheath f) Hot set test for TR-XLPE insulation as per Clause 10.9 of IEC-60840/ IS 10810 Part 30	
5.5.0	Inspection	The buyer reserves the right to inspect cables at the Seller's works at any time prior dispatch, to verify compliance with the specifications. In-process and final inspection call intimation shall be given in 10 days advance to purchaser. In the event of any discrepancy in the test reports i.e. test reports not acceptable or any type tests(including special /additional tests, if any) not carried out , same shall be carried out without any cost implication to BSES before dispatch of cable.	
5.6.0	Test certificates	Three sets of complete test certificates shall be submitted along with the dispatch documents.	

6.0 SHIPPING, HANDLING & SITE SUPPORT

6.1.0	Packing	The cable shall be wound on non-returnable steel drums of suitable size of minimum hub diameter of 20D (where D is the overall diameter of the cable) and packed conforming to international standards. The drum shall be fully enclosed by suitable packing preferably PP sheeting. Cable shall have sea worthy packing in case cables are dispatched by shipping lines.

6.2.0	Pulling eye & sealing of Cable ends	A cable pulling eye shall be provided at "Z" end of cable on each drum. Suitable fillings/putty shall be used for sealing gap between outer sheath and pulling eye. Heat shrinkable sleeves with the pulling eye shall also be provided. The pulling eye shall be directly connected to the conductor and be capable to withstand a tensile load of 30N/mm^2 of conductor area. The "A" end of the cable shall be sealed with filling material/putty and heat shrinkable cap. Drawing of the pulling eye shall be submitted along with the bid for review.
6.3.0	Drum identification label	The following information shall be marked on the drum: The following information shall be marked on the drum: a) Drum identification number b) Trade name or trade mark; if any c) Name of manufacturer d) Name of buyer i.e. BSES e) Nominal sectional area of the conductor of the cable f) Type of cable and voltage for which it is suitable g) Length of the cable on the drum, with "A" end and "Z" end markings h) Purchase order number with SAP item code i) Year and month of manufacturing j) Direction of rotation of drum (an arrow) k) Net weight of cable in drum and gross weight of cable with drum l) Batch no or Lot no.
6.4.0	Shipping	The seller shall give complete shipping information concerning the gross weight, size of each packing.
6.5.0	Handling & Storage	Manufacturer instruction shall be followed. Detail handling & storage instruction sheet/manual needs to be furnished before commencement of supply.
6.6.0	Transit damage	The seller shall be responsible for any transit damage due to improper packing.

7.0 DEVIATIONS

7.1	Deviation	Deviations from this Specification shall be stated in writing with the tender by reference to the Specification clause/GTP/Drawing and a description of the alternative offer. In absence of such a statement, it will be assumed that the bidder complies fully with this specification.

Annexure – A

Scope, Documentation and Delivery schedule

Document/Drawing submission shall be as per the matrix given below:

i. All documents/drawings shall be provided in soft copy only in returnable Pen drives
ii. Language of the documents shall be English only.
iii. Incomplete submission shall be liable for rejection.
iv. Document check sheet compliance shall be the first sheet for each submission stage i.e. Technical bid, Drawing Approval, Pre Dispatch.
v. No submission is acceptable without check list compliance.
vi. Deficient/ improper document/ drawing submission shall be liable for rejection.
vii. Order of documents shall be strictly as per the check list.
viii. Any drawing not included in the below table but necessary for detailed engineering shall be deemed to be included in bidder's scope.

S No.	Description	Bid	Approval	Pre Dispatch
8.1	Guaranteed Technical Particulars (GTP)	required	required	
8.2	Deviation Sheet, if any	required	required	
8.3	Detailed cross sectional drawing of cable	required	required	
8.4	Type test reports for the offered type and rating of cable and joints & terminations	required	required	
8.5	Complete product catalogue and Manual	required	required	
8.6	Certification for quality standards	required		
8.7	Make of Raw Materials	required	required	
8.8	Cable de-rating factors	required	required	
8.9	Dimensional drawing for pulling eye & End cap		required	
8.10	Manufacturer's Quality Assurance Plan		required	
8.11	Program for production and testing		required	
8.12	Detailed installation & commissioning instructions		required	
8.13	Test certificates of all raw materials			required
8.14	Inspection and routine test reports, carried out in manufacturer's works			required

Annexure–B: Guaranteed Technical Particulars (Data by Supplier)

S No.	Description	Unit	Data specified by the purchaser	Data to be filled by the manufacturer
1	Name of Manufacturer			
2	Country of manufacturer			
3	Type of cable			
4	Standard according to which cable is manufactured			
5	Rated voltage	kV	38/66	
6	Highest system voltage	kV	72.5	
7	System frequency	Hz	50	
8	No of phases per circuit	Nos	3	
9	System earthing		Solidly grounded	
10	Rated short time current of conductor	kA		
11	Rated short time current of metal sheath (alone)	kA		
12	Rated short time current of metal screen (if provided)	kA		
13	Rated short time current of metal sheath and screen	kA	19	
14	Duration of short circuit current	Sec	1	
15	Impulse withstand voltage 1.2/50 micro sec wave	kVp	325	
16	Power frequency withstand voltage	kV(rms)	140	
17	Conductor			
a)	Nominal cross sectional area	mm^2	1000 / 630	
b)	Type class of conductor		Compacted Stranded Circular	
c)	Material of conductor		Aluminum	
d)	Flexibility class of conductor		Class -2	
e)	Minimum numbers of strands	No.		
f)	Diameter of strands before compaction. (nominal / Minimum)	mm / mm		
g)	Material of longitudinal water sealing filling of conductor			

S No.	Description	Unit	Data specified by the purchaser	Data to be filled by the manufacturer
18	Details of semi conducting tape over the conductor			
19	Conductor Screen			
a)	Material and type			
b)	Minimum thickness	mm	0.8	
c)	Make and grade of semi conducting compound.			
20	Insulation			
a)	Material of Insulation		TR-XLPE	
b)	Nominal thickness	mm	11	
c)	Minimum thickness		9.9	
d)	Make and grade of insulation compound			
e)	Maximum dielectric stress at the conductor surface	kV/mm		
21	Insulation screen			
a)	Material and type			
b)	Minimum thickness	mm	0.8	
c)	Make and grade of semi conducting compound.			
22	Inner water swellable tape			
a)	Nominal thickness	mm	0.3	
b)	Minimum swell height in one minute.	mm	12 mm in one minute	
c)	Water swallable tape overlap	%	min 10%	
23	Copper tape required to meet the short circuit rating (if provided)			
a)	Thickness and width of copper tape	mm / mm		
24	Outer water swellable tape	mm		
a)	Nominal thickness	mm	0.3	

S No.	Description	Unit	Data specified by the purchaser	Data to be filled by the manufacturer
b)	Minimum swell height in one minute.	mm	12 mm in one minute	
c)	Overlap	%	10% min	
25	Nominal diameter under metal sheath	mm		
26	Material of the metal sheath		Corrugated aluminum(with corrosion protection& corrugation filling)	
27	Minimum thickness of Corrugated Aluminum sheath	mm	1.75	
28	Nominal radial clearance allowed under metal sheath (in case of corrugated aluminum sheathing)	mm	Vendor to provide	
29	Nominal diameter over metal sheath	mm		
30	Outer Sheath			
a)	Material and type		HDPE type ST 7	
b)	Minimum thickness	mm	3.3	
c)	Nominal thickness	mm	4	
d)	Anti termite treated?		Yes / No	
e)	Color		Black	
31	Material of semi-conductive coating/extrusion over the outer jacket			
32	AC test voltage at works for insulation.	KV(rms)	90	
33	DC test voltage at works for outer jacket.	KV (DC)	25	
34	Overall dia of completed single core cable	mm		
35	Weight per meter of complete cable	kg/m		

S No.	Description	Unit	Data specified by the purchaser	Data to be filled by the manufacturer
36	Short circuit capacities with maximum conductor temperature of 250Deg C : (conductor temperature of 90 Deg C at the commencement of short circuit) a) 0.5 second duration b) 1 second duration c) 2 second duration d) 3 second duration	kA		
37	Minimum radius of bend round: which cable can be laid a) Direct burial inground b) Inducts	mm		
38	Maximum D.C. resistance of conductor per KM at 20^0C	Ohm/km	0.0469 for 630 mm^2 cable 0.0291 for 1000 mm^2cable.	
39	Maximum AC resistance of conductor per KM at 90 deg. C	Ohm		
40	Equivalent star reactance per KM of 3 phase circuit at 50 Hz	Ohm		
41	Maximum electrostatic capacitance per KM of cable	pf		
42	Maximum continuous current carrying capacity per circuit when laid in ground as per the following parameters (with screens cross bonded) -Maximum continuous conductor temperature of 900 C -Maximum conductor temperature during short circuit of 2500 C -Ground temperature of 300C -Soil resistivity of 1500C- cm/Watt -Depth of laying of 150cm	Amp		
43	Maximum continuous current carrying capacity per cable when laid inair with ambient temperature of 40^0C and other	Amp		

S No.	Description	Unit	Data specified by the purchaser	Data to be filled by the manufacturer
	parameters as per S no 42 (with screens cross bonded)			
44	Rating factors for ambient air temperature attached	Yes/No		
45	Rating factors for ground temperature attached	Yes/No		
46	Rating factors for phase spacing in flat formation attached	Yes/No		
47	Rating factors for grouping of cable laid in ground in horizontal formation attached	Yes/No		
48	Rating factors for grouping of cable laid in ground in tri-foil touching formation attached	Yes/No		
49	Rating factors for thermal resistivity of soil attached	Yes/No		
50	Rating factors for depth of laying attached	Yes/No		
51	Max.power factor of charging KVA of cable when laid direct in the ground at normal voltage frequency at conductor temperature at 90^0C			
52	Max.dielectric power loss of cable per km of 3 phase circuit laid direct in ground at normal voltage, frequency and maximumconductortemperatureo f90^0C	Watt /km		
53	Sheath loss of cable per KM of 3 phase circuit at normal voltage frequency at maximum continuous current rating. a) Laid direct inground b) Drawn intoducts c) Installed in air	Watt/km		
54	Impedance per KM of 3phase circuit at 50 C/s and maximum conductor temperature. a. Impedance	Ohm		

S No.	Description	Unit	Data specified by the purchaser	Data to be filled by the manufacturer
	b. Reactance c. Positive and negative sequence d. Zero sequence e. Capacitance f. Conductance g. Inductive susceptance h. Conductive susceptance			
55	Standard drum length of cable	meters	500 +/- 5% (short lengths not acceptable except the last length)	
56	The overall quantity tolerance	%		
57	Cable to be wound on non returnable steel drum.	Yes/No	Yes	
58	Normal delivery length	meters		
59	Cable pulling Eye to be provided at "Z" end A End shall be provided with sealing end cap	Yes		
60	Tensile load withstand capacity for pulling eye		30 N / mm^2	
61	Approximate shipping weight for the normal deliver length with the drum size (flange dia. in mm and width in mm)	kg		
62	Drum size and weight (Flange dia X flange width X hub dia)			
63	Embossing details on outer sheath			
64	Sequential marking at every meter		Provided	
65	Process of cross linking of polyethylene.			
66	Induced Voltage in sheath, cable			
a)	In trefoil formation	V/km		
b)	In flat formation with D+70	V/km		

S No.	Description	Unit	Data specified by the purchaser	Data to be filled by the manufacturer
67	Cross Sectional Drawing of offered cable design with layer wise component details		To be provided by bidder	

Annexure - C

List of Sub-Vendors for critical items

Vendor/Bidder to state sub-vendors' names for other items, wherever approved names are not mentioned, for purchaser's approval during tendering stage else purchaser shall impose as per their requirement and bidder to follow the same in post-order stages.

Ser. No.	Raw Materials		Name of the Make
1.	XLPE Compound	1	Dow Chemicals , U.S.A.
		2	Borealis , Sweden
		3	Hanwha , South Korea
2.	Semi-Conducting Compound	1	Dow Chemicals, U.S.A.
		2	Borealis , Sweden
		3	Hanwha , South Korea
3.	Conductor Water-Blocking tapes / yarn	1	Lantor
		2	Geca
		3	Miracle
		4	Scapa
		5	Sneham International
4.	Water-Swellable Tapes (Pre-slitted)	1	Lantor
		2	Geca
		3	Miracle
		4	Scapa
		5	Sneham International

Ser. No.	Raw Materials		Name of the Make
5.	Aluminium Rod	1	Bharat Aluminium Co. Ltd. (BALCO)
		2	Hindustan Aluminium Co. Ltd. (HINDALCO)
		3	National Aluminium Co. Ltd. (NALCO)
		4	Vedanta (Sesa Sterlite)
6.	Copper Tape	1	Aggarwal Metal
		2	Indian Smelting
		3	Luvata Swedan
		4	Outokumpu Copper Strip AB, Swedan
7	Galvanised Steel Wires / Strips	1	Tata
		2	Balaji
		3	Systematic
		4	Mica Wires Pvt. Ltd.
		5	Bansal Industries
8	PVC Compound	1	Kalpana
		2	Universal
		3	SCJ Plastic
		4	Sriram Polytech
		5	Shri Ram Vinyl, Kota
9	P. P. Fillers	1	Vijoy Polymers
		2	Yash Polymers
		3	AVSL Industries
10	Core Identification Tape	1	AVSL Industries
		2	Yash Polymer

Ser. No.	Raw Materials		Name of the Make
		3	Vijoy Polymers
11	PE Compound	1	Borealis
		3	Shakun
		4	Kalpana

ANNEXURE -D

DIMENSIONS

SIZE	A EXP.(Min.)	A REC.(Max)	B EXP.(Min.)	C EXP.(Min.)	D EXP.(Min.)	LC %	T (WALL REC. ± 20 %)
EC 120/150	75	34	120	105	50	± 10	4.2
EC 240/300	100	62	130	110	70	± 10	3.5
EC 400	145	75	155	120	70	± 10	4.6

EXP - Expanded (as supplied), REC - Recovered freely, LC - Longitudinal Change,T - Wall Thickness, EC - End Cap

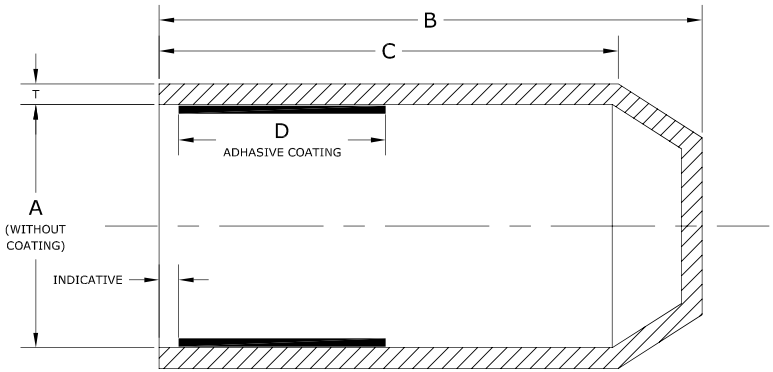

END CAP
(AS SUPPLIED)
SECTIONAL VIEW

MATERIAL SPECIFICATIONS

	Characteristics	Test Class	Value	Test Method
A	**Physical Properties**			
1	Specific Gravity	Type	1.05 ± 0.2	ASTM D-1505
2	Water Absorption	Type	1 % (max)	ASTM D-570 / ISO 62
3	Tensile Strength	Routine	10 N /sqmm (min)	ASTM D-412 / ISO 37
4	Ultimate Elongation	Routine	300% (min)	ASTM D-412 / ISO 37
5	Hardness	Type	45 shore D ± 3	ASTM D-2240
6	**Thermal Test**			
B	Thermal Ageing (120°C for 500 hrs)			
1	Tensile Strength	Type	8 N/sqmm (min)	ASTM D-412 / ISO 37
2	Ultimate Elongation	Type	200% (min)	ASTM D-412 / ISO 37
C	**Electrical Properties**			
1	Volume Resistivity	Type	10^{12} ohm-cm. (min)	ASTM D-257 / IEC 93
2	Dielectrical Strength	Type	10 kV/mm. (min)	ASTM D-149 / IEC 243
3	Dielectric Constant	Type	5 (max)	ASTM D-150 / IEC 250

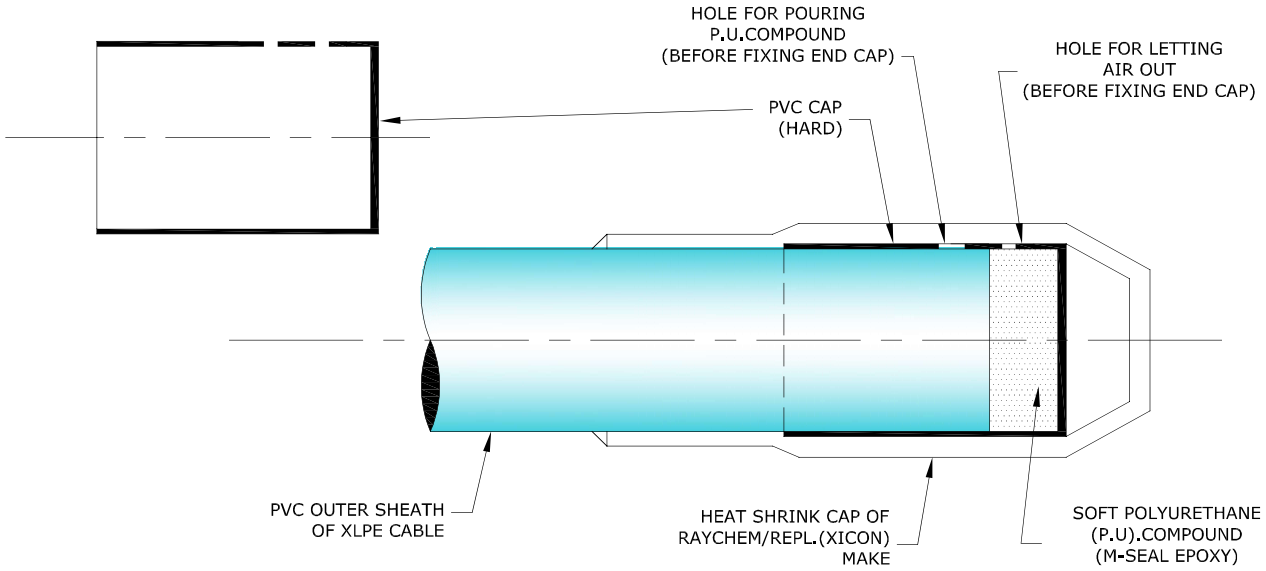

END CAP
(AFTER HEAT SHRINKING OVER THE CABLE END)

Note : 1) All dimension in mm
2) Colour Black
3) Size as mentioned in the table shall be stencilled on respective item

BSES

DRAWING No. MISC/E/4-1131/1698

SCALE :NOT TO SCALE | DATE: 09-05-2011

END SEALING CAP
(FOR XLPE CABLE)

DRAWN BY:	CHECKED BY:	APPROVED BY:

REVISIONS

Addl V.P.

ANNEXURE -E

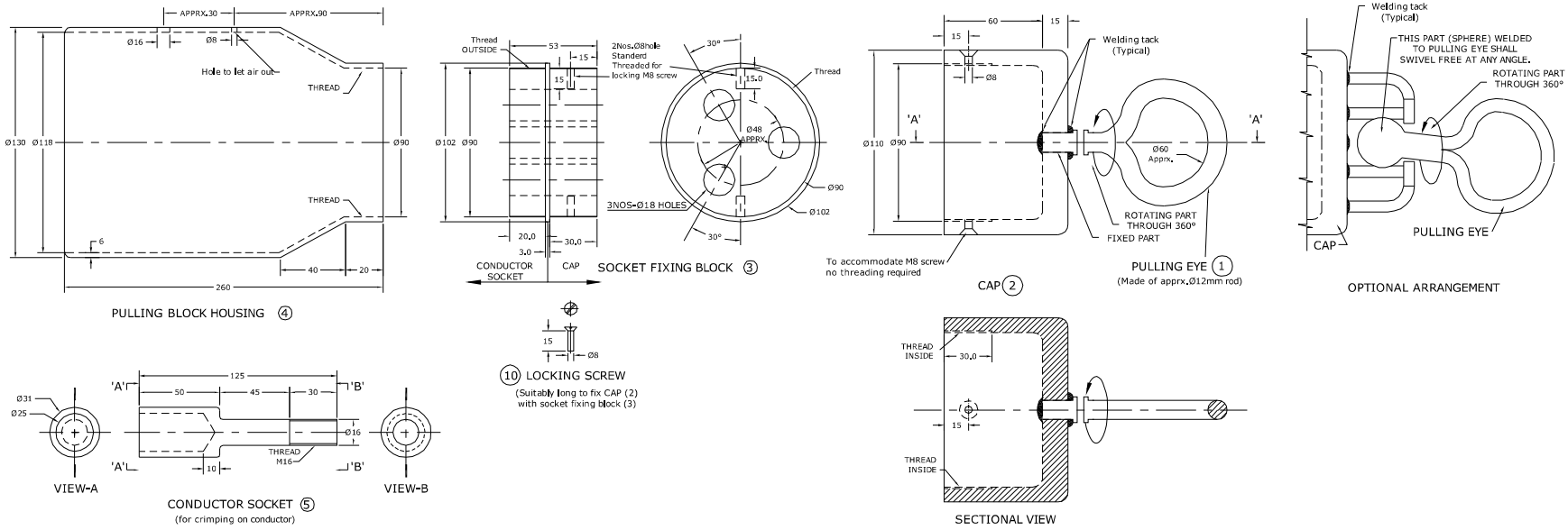

Exploded View

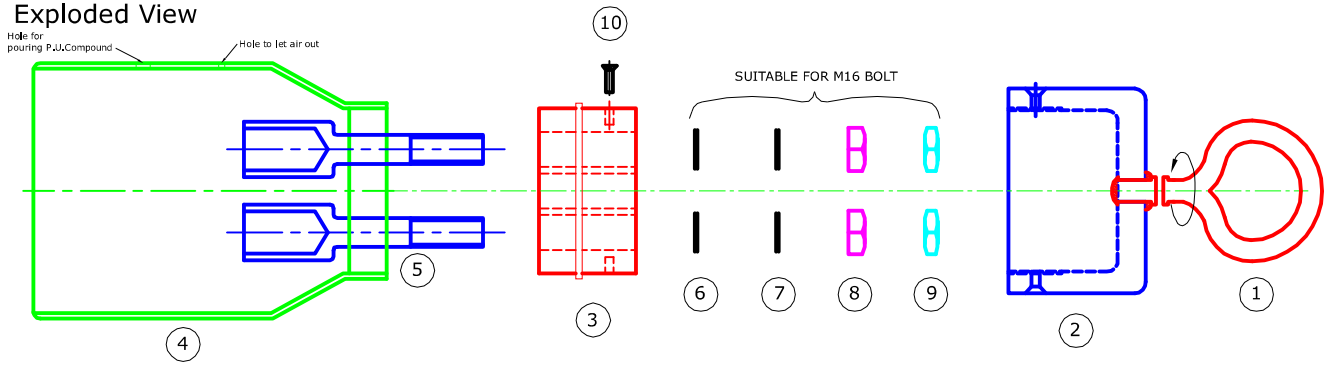

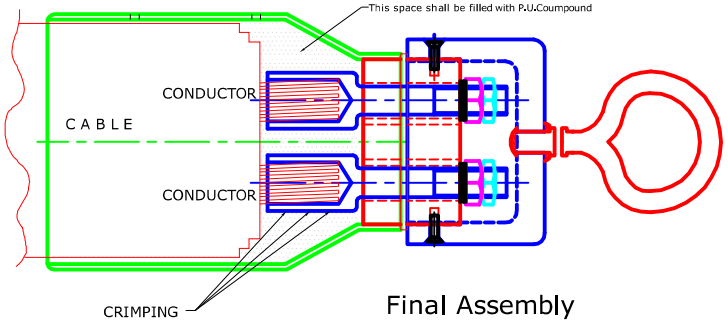

Final Assembly

EXAMPLE:
1) For cable size 33kV, 3/C X 400sq mm Al XLPE.
2) Diameter over conductor : 23.8mm apprx.
   Overall diameter : 108±3mm apprx.
   Pulling force applicable on the cable : 30 N/sq mm
   Pulling eye shall withstand total force of : 36000N+Safety margin

NOTE:
1) All Dimensions are in mm, unless otherwise stated.
2) This drawing is typical / indicative.Separate dimensioned drawing for cable pulling eye assembly, suitable for required size & rating of cables, shall be submitted for approval,prior to manufacturing.
3) After fixing cable pulling eye, P.U.(Poly-Urethane) Compound shall be poured to occupy inner spaces to avoid ingress of Water / Moisture.
4) After P.U.Compound oozes/flows out from the cable side,the same edge shall be sealed with suitable sleeve/Tape.

NO.	DISCRIPTION	QTY.	MATERIAL
10	LOCKING SCREW	2	M.S.Zinc-Plated
9	LOCK NUT	3	M.S.Zinc-Plated
8	NUT	3	M.S.Zinc-Plated
7	SPRING. WASHER	3	M.S.Zinc-Plated
6	PLAIN WASHER	3	M.S.Zinc-Plated
5	CONDUCTOR SOCKET	3	AL.
4	PULLING BLOCK HOUSING	1	M.S.Zinc-Plated
3	SOCKET FIXING BLOCK	1	M.S.Zinc-Plated
2	CAP	1	M.S.Zinc-Plated
1	PULLING EYE	1	M.S.Zinc-Plated

BSES

DRAWING No. MISC/E/4-1133/1699

SCALE :NOT TO SCALE | DATE: 09-05-2011

CABLE PULLING EYE ASSEMBLY (TYPICAL)

DRAWN BY: | CHECKED BY: | APPROVED BY:

REVISIONS

Addl V.P.

ANNEXURE-F

QUALITY ASSURANCE PLAN (QAP)
FOR 66 kV EHV CABLES

S. NO.	COMPONENT & OPERATION	CHARACTERISTICS	CLASS	TYPE OF CHECK	QUANTUM OF CHECK	REFERENCE DOCUMENT	ACCEPTANCE NORMS	FORMAT OF RECORD	AGENCY			Remark
									SV	MFR	BSES	
1	2	3	4	5	6	7	8	9	10	11	12	13
	Legend : SV : Sub-Vendor of Cable Manufacturer, MFR : Cable Manufacturer, MPS : Material Purchase Specification,											
	P : Perform, W : Witness, V : Verification											
A	**RAW MATERIAL**											
1	Aluminium/Copper Rod	a) Tensile strength	Major	Physical	Sample	MPS	MPS	Reg./Sheet	P	P/V	V	
		b) Resistivity	Major	Electrical	Sample	MPS	MPS	Reg./Sheet	P	P/V	V	
		c) Diameter	Major	Physical	Sample	MPS	MPS	Reg./Sheet	P	P/V	V	
		d) Chemical composition	Major	Chemical	Sample	MPS	MPS	Test certificate	P	V	V	
		e) Surface finish	Major	Visual	Sample			-	P	P	_	
2	PVC Compound	a) Tensile Strength	Major	Physical	Sample	MPS	MPS	Reg./Sheet	P	P/V	V	
		b) Elongation at break	Major	Physical	Sample	MPS	MPS	Reg./Sheet	P	P/V	V	
		c) Thermal stability	Major	Physical	Sample	MPS	MPS	Reg./Sheet	P	P/V	V	
3	**TR-XLPE** Compound (Borealis/Dow chemical/ Hanwa)	a) Packing	Minor	Visual	100%	MPS	MPS	-	P	V	-	
		b) Tensile Strength	Major	Physical	Sample	MPS	MPS	Reg./Sheet	P	P/V	V	
		c) Elongation at break	Major	Physical	Sample	MPS	MPS	Reg./Sheet	P	P/V	V	
		d) Hot set test	Major	Physical	Sample	MPS	MPS	Reg./Sheet	P	P/V	V	
		e) Volume Resistivity	Major	Electrical	Sample	MPS	MPS	Reg./Sheet	P	P/V	V	
		f) Cure Curve (Max. Torque)	Major	Physical	Sample	MPS	MPS	Reg./Sheet	-	P	V	
		g) Density	Major	Physical	Sample	MPS	MPS	Reg./Sheet	P	P/V	V	
4	Semi-conducting Compound (Borealis/Dow chemical/ Hanwa)	a) Packing	Minor	Visual	100%	MPS	MPS	-	P	V	-	
		b) Volume Resistivity	Major	Electrical	Sample	MPS	MPS	Reg./Sheet	P	P/V	V	
		c) Tensile Strength	Major	Physical	Sample	MPS	MPS	Reg./Sheet	P	P/V	V	
		d) Elongation at break	Major	Physical	Sample	MPS	MPS	Reg./Sheet	P	P/V	V	
		e) Cure Curve (Max. Torque)	Major	Physical	Sample	MPS	MPS	Reg./Sheet	-	P	V	
		f) Density	Major	Physical	Sample	MPS	MPS	Reg./Sheet	P	P/V	V	
5	Copper tape	a) Thickness & width	Major	Physical	Sample	MPS	MPS	Reg./Sheet	P	P/V	V	
		b) Tensile Strength	Major	Physical	Sample	MPS	MPS	Reg./Sheet	P	P/V	V	
		c) Elongation at break	Major	Physical	Sample	MPS	MPS	Reg./Sheet	P	P/V	V	
		d) Resistivity	Major	Electrical	Sample	MPS	MPS	Reg./Sheet	P	P/V	V	
6.	Armour wires/strips (Galvanised steel)	a) Dimensions	Major	Physical	Sample	MPS	MPS	Reg./Sheet	P	P/V	V	
		b) Surface condition/finish	Major	Visual	Sample	MPS	MPS	Reg./Sheet	P	P/V	V	
		c) Tensile Strength	Major	Physical	Sample	MPS	MPS	Reg./Sheet	P	P/V	V	
		d) Elongation at break	Major	Physical	Sample	MPS	MPS	Reg./Sheet	P	P/V	V	
		e) Torsion test for round wire	Major	Physical	Sample	MPS	MPS	Reg./Sheet	P	P/V	V	
		f) Wrapping test	Major	Physical	Sample	MPS	MPS	Reg./Sheet	P	P/V	V	
		g) Mass of zinc coating	Major	Physical	Sample	MPS	MPS	Reg./Sheet	P	P/V	V	
		h) Uniformity of zinc coating	Major	Physical	Sample	MPS	MPS	Reg./Sheet	P	P/V	V	
		i) Adhesion test	Major	Physical	Sample	MPS	MPS	Reg./Sheet	P	P/V	V	
		j) Resistivity test	Major	Electrical	Sample	MPS	MPS	Reg./Sheet	P	P/V	V	
7	Water Swellable	a) Dimensions	Minor	Physical	Sample	MPS	MPS	Reg./Sheet	P	P/V	V	

QUALITY ASSURANCE PLAN (QAP)
FOR 66 kV EHV CABLES

S. NO.	COMPONENT & OPERATION	CHARACTERISTICS	CLASS	TYPE OF CHECK	QUANTUM OF CHECK	REFERENCE DOCUMENT	ACCEPTANCE NORMS	FORMAT OF RECORD	AGENCY			Remark
									SV	MFR	BSES	
1	2	3	4	5	6	7	8	9	10	11	12	13
	Legend : SV : Sub-Vendor of Cable Manufacturer, MFR : Cable Manufacturer, MPS : Material Purchase Specification,											
	P : Perform, W : Witness, V : Verification											
	tape	b) Swelling height	Major	Physical	Sample	MPS	MPS	Reg./Sheet	P	P/V	V	
		c) Resistivity	Major	Electrical	Sample	MPS	MPS	Reg./Sheet	P	P/V	V	
		d) Weight	Major	Physical	Sample	MPS	MPS	Reg./Sheet	P	P/V	V	
8	Steel Drum	a) Dimension	Major	Meas.	1 sample per size	IS 10418 / Purchase order		-	P	P	-	
		b) Finish & workman ship	Minor	Visual	1 sample per size	Compliance to standard Engineering norms & free from surface defects		-	P	P	-	
9	Binder tape	a) Dimensions & material	Minor	Physical	Sample	MPS	MPS	-	P	P	-	
10	Polypropylene filler	a) Size	Minor	Physical	Sample	Purchase order	Purchase order	-	P	P	-	
11	Heat shrinkable end cap	a) Bore diameter	Major	Physical	1 sample per size	--	--	-	-	P	-	
		b) Length of end cap	Minor	Physical	1 sample per size	--	--	-	-	P	-	
B	**PROCESS INSPECTION**											
1	Wire Drawing	a) Diameter	Major	Physical	Sample			Reg./Sheet	-	P	V	
		b) Surface finish	Major	Visual	100 %	Smooth & free from defects		--	-	P	-	
		c) Tensile test (for Al)	Major	Physical	Sample	IS: 8130/84	IS: 8130/84	Reg./Sheet	-	P	V	
		d) Elongation test (for Cu)	Major	Physical	Sample	IS: 8130/84	IS: 8130/84	Reg./Sheet	-	-	V	
		e) Wrapping test (for Al)	Major	Physical	Sample	IS: 8130/84	IS: 8130/84	Reg./Sheet	-	P	V	
2	Stranding	a) No. of wires/strands	Major	Physical	At the time of m/c setting			Reg./Sheet	-	P	V	
		b) Lay length & Lay direction	Major	Physical	-do-			-	-	P	V	
		c) Dia of conductor	Major	Physical	During setting & once in each shift			Reg./Sheet	-	P	V	
		d) Surface finish	Major	Visual	100 %	No surface defects and free from sharp edges, scratches, grease, oil etc.		-	-	P	-	
3	Core extrusion (Conductor screen, Insulation & insulation screen)	a) Compound Make/Grade	Major	Visual	During m/c setting			-	-	P	-	Insulation screen shall be freely strippable, without application of heat.
		b) Thickness of insulation & extruded S.C. layers	Major	Physical	During m/c setting after stabilisation	Tech. Data Sheet / IS 7098/III	Tech. Data Sheet / IS 7098/III	Reg./Sheet	-	P	V	
		c) Surface finish	Minor	Visual	100 %	Smooth & free from defects		-	-	P	-	
		d) Printing on outer semi- conducting layer	Major	Visual	100 %	"DO NOT HEAT, FREELY STRIPPABLE"		-	-	P	-	
		e) Tensile Strength	Major	Physical	Sample	IS 7098/III	IS 7098/III	Reg./Sheet	-	P	V	
		f) Elongation at break	Major	Physical	Sample	IS 7098/III	IS 7098/III	Reg./Sheet	-	P	V	
		g) Hot set test	Major	Physical	Sample	IS 7098/III	IS 7098/III	Reg./Sheet	-	P	V	
		g1) Ovality of core	Minor	Physical	Sample	Tech. Data Sheet	Tech. Data Sheet	Reg./Sheet	-	P	V	

BSES

QUALITY ASSURANCE PLAN (QAP)

FOR 66 kV EHV CABLES

S. NO.	COMPONENT & OPERATION	CHARACTERISTICS	CLASS	TYPE OF CHECK	QUANTUM OF CHECK	REFERENCE DOCUMENT	ACCEPTANCE NORMS	FORMAT OF RECORD	AGENCY			Remark
									SV	MFR	BSES	
1	2	3	4	5	6	7	8	9	10	11	12	13
	Legend : SV : Sub-Vendor of Cable Manufacturer, MFR : Cable Manufacturer, MPS : Material Purchase Specification,											
	P : Perform, W : Witness, V : Verification											
		h) Eccentricity of insulation	Minor	Physical	Sample	Tech. Data Sheet	Tech. Data Sheet	Reg./Sheet	-	P	V	
		i) Core diameter	Minor	Physical	Sample	Tech. Data Sheet	Tech. Data Sheet	Reg./Sheet	-	P	V	
		j) Void & contamination test for insulation (Silicon Oil test)	Major	Physical	Sample			-	-	P	V	
		k) Wafer boil test for extruded semi-conducting layers	Major	Physical	1 sample/lot	BIS draft Specn	BIS draft Specn	Reg./Sheet	-	P	V	
4	Taping - water Swellable semi-conducting	a) Dimensions	Minor	Physical	Sample	Tech. Data Sheet	Tech. Data Sheet	-	-	P	-	
		b) Tape Application (Overlap)	Minor	Visual	During m/c setting	Suitable overlap	Suitable overlap	-	-	P	-	
5	Taping - Copper tape	a) Width & Thickness of tape	Major	Physical	During m/c setting	Tech. Data Sheet	Tech. Data Sheet	Reg./Sheet	-	P	V	
		b) Number of tapes	Major	Visual	During m/c setting	Tech. Data Sheet	Tech. Data Sheet	Reg./Sheet	-	P	V	
		c) Tape application (Overlap)	Minor	Visual	During m/c setting	Tech. Data Sheet	Tech. Data Sheet	-	-	P	-	
6	Laying up	a) Identification of cores	Major	Visual	During m/c setting	Tech. Data Sheet	Tech. Data Sheet	-	-	P	-	Cores shall be laidup with PP fillers & suitable tape binder shall be provided over laid up assembly
		b) Direction of lay, core Sequence & Lay length	Major	Visual	During m/c setting	IS 7098/III, PIL- W-02	IS 7098/III, PIL- W-02	-	-	P	-	
		c) Application of binder tape	Minor	Visual	During m/c setting	Tech. Data Sheet		-	-	P	-	
		d) Shape of laid up assembly	Minor	Visual	100%	Reasonably circular	Reasonably circular	-	-	P	-	
7	Inner sheath	a) Material & type	Major	Visual	During m/c setting	Tech. Data Sheet	Tech. Data Sheet	-	-	P	-	
		b) Thickness	Major	Physical	During m/c setting & drum change	Tech. Data Sheet & IS 7098/III	ech. Data Sheet & IS 7098/III	Reg./Sheet	-	P	V	
		c) Surface finish	Minor	Visual	100 %	Surface shall be smooth & free from defects		-	-	P	-	
		d) Colour of inner sheath	Major	Visual	100 %	Tech. Data Sheet	Tech. Data Sheet	-	-	P	-	
8	Armouring	a) Dimension of armour wires/strips	Major	Physical	During m/c setting	Tech. Data Sheet	Tech. Data Sheet	Reg./Sheet	-	P	V	No negative tol. on strip thickness/wire diameter
		b) No. of armour strip/wire	Major	Counting	During m/c setting	Tech. Data Sheet	Tech. Data Sheet	Reg./Sheet	-	P	V	
		c) Armour coverage	Minor	Visual	During m/c setting	IS 7098/III	IS 7098/III	-	-	P	-	
		d) Direction of lay	Major	Visual	During m/c setting	IS 7098/III	IS 7098/III	-	-	P	-	
		e) Lay length/Gear setting	Minor	Visual	During m/c setting			-	-	P	-	
		f) Surface finish	Major	Visual	100 %	No cross over/over riding of wire/strip		-	-	P		
9	Outer sheath/Rewinding	a) Material & type	Major	Visual	During m/c setting	Tech. Data Sheet	Tech. Data Sheet	-	-	P	-	
		b) Anti rodent & termite additives	Major	Visual	Each loading			Reg./Sheet	-	P	V	

QUALITY ASSURANCE PLAN (QAP)
FOR 66 kV EHV CABLES

S. NO.	COMPONENT & OPERATION	CHARACTERISTICS	CLASS	TYPE OF CHECK	QUANTUM OF CHECK	REFERENCE DOCUMENT	ACCEPTANCE NORMS	FORMAT OF RECORD	AGENCY			Remark
									SV	MFR	BSES	
1	2	3	4	5	6	7	8	9	10	11	12	13
	Legend : SV : Sub-Vendor of Cable Manufacturer, MFR : Cable Manufacturer, MPS : Material Purchase Specification,											
	P : Perform, W : Witness, V : Verification											
		b) Thickness	Major	Physical	Each length	Tech. Data Sheet	Tech. Data Sheet	Reg./Sheet	-	P	V	
		c) Overall diameter	Major	Physical	Each length	Tech. Data Sheet	Tech. Data Sheet	Reg./Sheet	-	P	V	
		d) Surface finish & colour of sheath	Major	Visual	100 %	Surface smooth & free from defects. Colour as per Tech. Data Sheet		-	-	P	-	
		e) Cable length verification	Major	Visual	Each length	Manufacturing Plan	Manufacturing Plan	-	-	P	-	
		f) Marking	Major	Visual	Each length	As per approved GTP/cross sectiona drawing		Reg./Sheet	-	P	V	
C	**FINAL INSPECTION**											
1	Routine tests	a) High Voltage	Critical	Electrical	100 %	IS 7098/III	IS 7098/III	Test Report	-	P	V	
		b) Conductor Resistance	Critical	Electrical	100 %	IS 8130/84	IS 8130/84	Test Report	-	P	V	
		c) Partial Discharge	Critical	Electrical	100 %	IS 7098/III	IS 7098/III	Test Report	-	P	V	
		d) Impulse	Critical	Electrical	One sample per lot			Test Report		P	V	
		e) Armour Coverage	Critical	Physical	One sample per lot			Test Report		P	V	
		f) Physiacal Dimensions	Critical	Physical	One sample per lot			Test Report		P	V	
		g) Freely Strippable insulation screen (Strippability Test)	Major	Physical	One sample per lot	Factory Standard	Factory Standard	Test Report	-	P	V	
2	Stage Inspection	Wire Drawing	Major	Visual	100 %	Tech. Data Sheet	IS/IEC	Test Report	-	P	W	Stage Inspection shall be conducted subject to BSES requirement
		Extrusion process	Major	Visual	100 %	Tech. Data Sheet	IS/IEC	Test Report	-	P	W	
		Raw maerial inspection at factory	Major	Physical	100 %	Tech. Data Sheet	IS/IEC	Test Report	-	P	W	
		Wrapping of Aluminium	Major	Physical	100 %	Tech. Data Sheet	IS/IEC	Test Report	-	P	W	
		Tensile test for Aluminium	Major	Physical	100 %	Tech. Data Sheet	IS/IEC	Test Report	-	P	W	
		a) Annealing test for copper	Major	Physical	Appendix A to IS 7098/III, each lot sample basis	IS 8130/84	IS 8130/84	-	-	P	V	Verification of process records.
		b) Tensile test for aluminium	Major	Physical		IS 8130/84	IS 8130/84	-	-	P	V	
		c) Wrapping test for aluminium	Major	Physical		IS 8130/84	IS 8130/84	-	-	P	V	Tests N/A on finished conductor.
		d) Conductor resistance test	Major	Electrical	Appendix A to IS 7098/III, each lot sample basis	IS 8130/84	IS 8130/84	Test Report	-	P	W	
		e) Test for thickness of insulation & sheath	Major	Physical		IS 7098/III & Tech. Data sheet	IS 7098/III & Tech. Data sheet	Test Report	-	P	W	
		f) Hot set test for insulation	Major	Physical		IS 7098/III	IS 7098/III	Test Report	-	P	W	

QUALITY ASSURANCE PLAN (QAP)
FOR 66 kV EHV CABLES

S. NO.	COMPONENT & OPERATION	CHARACTERISTICS	CLASS	TYPE OF CHECK	QUANTUM OF CHECK	REFERENCE DOCUMENT	ACCEPTANCE NORMS	FORMAT OF RECORD	AGENCY			Remark
									SV	MFR	BSES	
1	2	3	4	5	6	7	8	9	10	11	12	13
	Legend : SV : Sub-Vendor of Cable Manufacturer, MFR : Cable Manufacturer, MPS : Material Purchase Specification,											
	P : Perform, W : Witness, V : Verification											
3	Acceptance tests	g) Tensile strength & Elongation at break of insulation & outer sheath	Major	Physical	Each Lot Sample Basis	IS 7098/III & IS 5831/84	IS 7098/III & IS 5831/84	Test Report	-	P	W	
		h) Partial discharge test	Critical	Electrical		IS 7098/III	IS 7098/III	Test Report	-	P	W	
		i) High voltage test	Critical	Electrical		IS 7098/III	IS 7098/III	Test Report	-	P	W	
		j) Insulation resistance (Volume resistivity) test	Major	Electrical		IS 7098/III	IS 7098/III	Test Report	-	P	W	
		k) Tests for dimension of armour wires/strips	Major	Physical		IS 3975, IS 10810 Pt. 36 & Tech. Data sheet		Test Report	-	P	W	
		l) Test for anti termite & anti rodent property of outer sheath	Major	Physical		Tech. Data Sheet	Tech. Data Sheet	Reg./Sheet	-	P	W	
		m) Rewinding of cable on drum	Major	Visual		To check cable appearance, drum appearance, cable winding, packing, embossing/printing/sequential marking		Reg./Sheet	-	P	W	
		n) Void & contamination test for insulation (Silicon Oil test)	Major	Physical				Reg./Sheet	-	P	W	
		o) Wafer boil test for extruded semi-conducting layers	Major	Physical				Reg./Sheet	-	P	W	
		p) Freely Strippable insulation screen	Major	Physical		Factory Standard	Factory Standard	Test Report	-	P	W	
		q) Water Penetration test (WPT) on core (i.e.Logitudinal Water Blocking Test)	Major	Physical		IEC:60502	IEC:60502	Test Report	-	P	W	**Test shall be conducted for leakage of water through conductor.**
		r) Armour coverage	Major	Physical		As per data sheet & FS	As per data sheet & FS	Test Report	-	P	W	
		s) Ovality	Major	Physical		As per data sheet	As per data sheet	Test Report	-	P	W	
		t) Eccentricity	Major	Physical		As per data sheet	As per data sheet	Test Report	-	P	W	
		u) Mass & uniformity & zinc coating on armour	Major	Physical		As per data sheet & FS	As per data sheet & FS	Test Report	-	P	W	
		v) Resistivity of Strip armour	Major	Electrical		As per data sheet & FS	As per data sheet & FS	Test Report	-	P	W	
		w) Swelling height of water swellable tape	Major	Physical		As per data sheet & FS	As per data sheet & FS	Test Report	-	P	W	
		x) Flammability test	Major	Physical		As per IS-78098/II/2011	As per IS-78098/II/2011	Test Report	-	P	W	
		y)Impulse withstand test	Critical	Electrical		IS 7098/III	IS 7098/III	Test Report	-	P	W	

QUALITY ASSURANCE PLAN (QAP)
FOR 66 kV EHV CABLES

S. NO.	COMPONENT & OPERATION	CHARACTERISTICS	CLASS	TYPE OF CHECK	QUANTUM OF CHECK	REFERENCE DOCUMENT	ACCEPTANCE NORMS	FORMAT OF RECORD	AGENCY			Remark
									SV	MFR	BSES	
1	2	3	4	5	6	7	8	9	10	11	12	13
	Legend : SV : Sub-Vendor of Cable Manufacturer, MFR : Cable Manufacturer, MPS : Material Purchase Specification,											
	P : Perform, W : Witness, V : Verification											
		z) Ageing & Water absorption test(Gravimetric) on Insulation & Outer sheath	Major	Physical		IS 5831/84	IS 5831/84	Test Report	-	P	W	
		z1) Heating Cycle with Potential	Critical	Electrical	sample basis, once per PO			Test Report	-	P	W	
		z2) Raw Material Verification in all aspects	Major	Physical	Each Lot					P	W	
4	Type tests at vendor's works	a) Tests on conductor										
		i) Annealing test for copper	Major	Physical		IS 8130/84	IS 8130/84	-	-	P	V	Verification of process records. Tests N/A on finished conductor.
		ii) Tensile test for aluminium	Major	Physical		IS 8130/84	IS 8130/84	-	-	P	V	
		iii) Wrapping test for aluminium	Major	Physical		IS 8130/84	IS 8130/84	-	-	P	V	
		iv) Conductor resistance test	Major	Electrical		IS 8130/84	IS 8130/84	Test Report	-	P	V	
		b) Tests for armouring wires/strips										
		i) Dimensions of wire/strip	Major	Physical		IS 3975, IS 10810 Pt. 36 & Tech. Data sheet		Test Report	-	P	W	
		ii) Tensile strength & Elongation at break	Major	Physical		IS 3975	IS 3975	Test Report	-	P	W	Only for Steel wires/strips
		iii) Torsion test for wire	Major	Physical		IS 3975	IS 3975	Test Report	-	P	W	
		iv) Winding test for strip	Major	Physical		IS 3975	IS 3975	Test Report	-	P	W	
		v) Uniformity of zinc coating	Major	Chemical		IS 3975	IS 3975	Test Report	-	P	W	
		vi) Mass of zinc coating	Major	Chemical		IS 3975	IS 3975	Test Report	-	P	W	
		vii) Resistivity of wire/strip	Major	Electrical		IS 3975	IS 3975	Test Report	-	P	W	
		c) Test for thickness of insulation & sheath	Major	Physical		IS 7098/III & Tech. Data sheet	IS 7098/III & Tech. Data sheet	Test Report	-	P	W	
		d) Physical tests for insulation									W	
		i) Tensile strength & Elongation test	Major	Physical		IS 7098/III	IS 7098/III	Test Report	-	P	W	
		ii) Ageing in air oven	Major	Physical		IS 7098/III	IS 7098/III	Test Report	-	P	W	
		iii) Hot set test	Major	Physical		IS 7098/III	IS 7098/III	Test Report	-	P	W	
		iv) Shrinkage test	Major	Physical		IS 7098/III	IS 7098/III	Test Report	-	P	W	
		v) Water absorption (gravimetric)	Major	Physical	One sample per Tender	IS 7098/III	IS 7098/III	Test Report	-	P	W	
		e) Physical tests for outer sheath									W	
		i) Tensile strength & Elongation test at break	Major	Physical		IS 5831/84	IS 5831/84	Test Report	-	P	W	
		ii) Ageing in air oven	Major	Physical		IS 5831/84	IS 5831/84	Test Report	-	P	W	
		iii) Shrinkage test	Major	Physical		IS 5831/84	IS 5831/84	Test Report	-	P	W	

QUALITY ASSURANCE PLAN (QAP)
FOR 66 kV EHV CABLES

S. NO.	COMPONENT & OPERATION	CHARACTERISTICS	CLASS	TYPE OF CHECK	QUANTUM OF CHECK	REFERENCE DOCUMENT	ACCEPTANCE NORMS	FORMAT OF RECORD	AGENCY			Remark
									SV	MFR	BSES	
1	2	3	4	5	6	7	8	9	10	11	12	13
	Legend : SV : Sub-Vendor of Cable Manufacturer, MFR : Cable Manufacturer, MPS : Material Purchase Specification,											
	P : Perform, W : Witness, V : Verification											
		iv) Hot deformation test	Major	Physical		IS 5831/84	IS 5831/84	Test Report	-	P	W	
		v) Loss of mass in air oven	Major	Physical		IS 5831/84	IS 5831/84	Test Report	-	P	W	
		v) Heat shock test	Major	Physical		IS 5831/84	IS 5831/84	Test Report	-	P	W	
		vi) Thermal stability test	Major	Physical		IS 5831/84	IS 5831/84	Test Report	-	P	W	
		f) Electrical tests in sequence									W	
		i) Partial discharge test	Critical	Electrical		IS 7098/III	IS 7098/III	Test Report	-	P	W	
		ii) Bending test	Major	Physical		IS 7098/III	IS 7098/III	Test Report	-	P	W	
		iii) Partial discharge test	Critical	Electrical		IS 7098/III	IS 7098/III	Test Report	-	P	W	
		iv) Dielectric power factor as a function of voltage	Major	Electrical		IS 7098/III	IS 7098/III	Test Report	-	P	W	
		v) Dielectric power factor as a function of temperature	Major	Electrical		IS 7098/III	IS 7098/III	Test Report	-	P	W	
		vi) Heating cycle test	Major	Electrical		IS 7098/III	IS 7098/III	Test Report	-	P	W	
		vii) Dielectric power factor as a function of voltage	Major	Electrical		IS 7098/III	IS 7098/III	Test Report	-	P	W	
		viii) Partial discharge test	Critical	Electrical		IS 7098/III	IS 7098/III	Test Report	-	P	W	
		ix) Impulse withstand test	Critical	Electrical		IS 7098/III	IS 7098/III	Test Report	-	P	W	
		x) High voltage test	Critical	Electrical		IS 7098/III	IS 7098/III	Test Report	-	P	W	
		g) Insulation resistance (Volume resistivity test)	Major	Electrical		IS 7098/III	IS 7098/III	Test Report	-	P	W	
		h) Flammability test	Major	Physical		IS 7098/III	IS 7098/III	Test Report	-	P	W	
D	**PACKING & MARKING**											
1	Packing & Marking	a) Cable end sealing	Major	Visual	100 %	IS 7098/III/ Agreement	IS 7098/III/ Agreement	-	-	P	W/V	BSES representative may verify these characteristics on randomly selected drums.
		b) Pulling eye at leading end- removed from vendor scope, end cap shall be provided at both the end of cable	Major	Visual	100 %	As per agreement	As per agreement	-	-	P	W/V	
		b) Stencilling/Marking on drum	Minor	Visual	100 %	IS 7098(Part 2):2011/ Agreement	IS 7098(Part 2):2011/ Agreement	-	-	P	V	

QUALITY ASSURANCE PLAN (QAP)
FOR 66 kV EHV CABLES

S. NO.	COMPONENT & OPERATION	CHARACTERISTICS	CLASS	TYPE OF CHECK	QUANTUM OF CHECK	REFERENCE DOCUMENT	ACCEPTANCE NORMS	FORMAT OF RECORD	AGENCY			Remark
									SV	MFR	BSES	
1	2	3	4	5	6	7	8	9	10	11	12	13
	Legend : SV : Sub-Vendor of Cable Manufacturer, MFR : Cable Manufacturer, MPS : Material Purchase Specification,											
	P : Perform, W : Witness, V : Verification											

Note

1. Checks specified above for Raw Material, In-Process and Final Inspection shall be as relevant to the specific cable construction.
2. Number of samples shall be selected as per Factory Standard/Agreement wherever 'sample' is indicated for extent of check.
3. Plant standards shall be followed in case Technical Data Sheet does not include requirements for characteristics to be checked.
4. BSES may witness Raw material and in process inspection in addition to Routine/Acceptance tests at any time/stage of manufacturing.
5. BSES's Inspector may randomly select a cable drum for type testing at vendor's works.
6. For each of the offered lot for inspection, BSES may randomly select one cable drum for testing of end cap "Destructive testing" to verify adhesion of sealing cap to cable outer sheath. .
7. All factory Type Tests shall be Witnessed by BSES

Annexure- G

Testing and manufacturing process requirements w. r. t. TR- XLPE insulation

All cables made with TR-XLPE Insulation should be tested and/or certified to meet the following performance parameters as per ANSI /ICEA S-94-649 after one year AWTT.

Property	Units	Requirements Values
Min. Avg. Electrical Breakdown Strength(qual. test)	kV/mm	≥ 25
Impulse Strength	kV/mm	≥ 83
Water Tree Length	Mm	0.25
Max. Bowtie Tree Density	(Number per 16.4 cu. cm)	Maximum 15 (0.12-0.25 mm range)

Manufacturing processes to produce high-quality cables with the following characteristics:

- Cure consistency with hot set/creep less than 100%
- No voids larger than 75 microns per 16.4 cubic cm
- No ambers larger than 250 microns per 16.4 cubic cm
- No contaminants larger than 125 microns and less than 5 between 50-125 microns per cubic 16.4 cubic cm tested.
- Neutral indent on cable is less than 375 microns
- Cable insulation concentricity greater than 90% tested
- No protrusions greater than 75 microns at the conductor shield and 125 microns at the insulation shield

Annexure-H: Deviation Format

Sl. No.	Document Name	Clause No.	Deviation	Reason	Merit to BSES

BSES

Technical Specification

For

11kV Covered Conductor & Accessories

Specification no – BSES-TS-04-11CCA-R0

Rev		0
Date		01 April 2022
Prepared by	Abhishek Vashistha	
	Gautam Deka	01/04/2022
	Pronab Bairagi	01/04/2022
Reviewed by	Puneet Duggal	
	Amit Tomar	01/04/2022
Approved by	Gaurav Sharma	
	K Sheshadri	07/04/22

TABLE OF CONTENTS

1.0 SCOPE 3
2.0 STANDARDS 3
3.0 CLIMATIC CONDITIONS 3
4.0 GENERAL TECHNICAL REQUIREMENT 4
5.0 TESTS 11
6.0 INSPECTION 17
7.0 QUALITY ASSURANCE PLAN 18
8.0 DOCUMENTATION 19
9.0 PACKING & FORWARDING 21
10.0 DEVIATIONS 23
ANNEXURE-A guaranteed TECHNICAL PARAMETERS 23
ANNEXURE-B MAKE LIST 27

1.0 SCOPE

This specification provides design, manufacturing, testing, inspection, packing and dispatch to BSES New Delhi store/ site of XLPE insulated AAAC AL59 water tight DOG & GOAT covered conductor along with accessories (Cl.4.13), specified herein for their satisfactory operation in various lines and substations of BSES Rajdhani Power Ltd, New Delhi.

These covered conductors are to be used as overhead distribution conductors on single circuit and / or double circuit for BSES distribution lines and / or sub-stations.

2.0 STANDARDS

The covered conductor shall conform to the following International/Indian Standards, which shall mean latest revisions, with amendments/changes adopted and published, unless specifically stated otherwise in the Specification.

S. No.	International/ Indian Standard	Title
1	SS 4240814	Aluminium alloy stranded Conductors for overhead lines Al59 specifications
2	SS 4240813	Aluminium alloy wire for stranded Conductors for overhead lines- Al 59 wires
3	SS EN 50397-1	Covered conductors for overhead lines and the related accessories- Covered Conductors
4	SS EN50397-2	Covered conductors for overhead lines and the related accessories- Accessories for covered conductors- tests and acceptance criteria

3.0 CLIMATIC CONDITIONS

a)	Average grade atmospheric condition	Heavily polluted, dry
b)	Maximum altitude above sea level	1000 M

c)	Air temperature Ambient	i) Highest : 50˚C ii) Average : 30˚C iii) Minimum : 0˚C
e)	Relative Humidity	100 % max
f)	Thermal Resistivity of Soil	150˚C. cm / W (max.)
g)	Seismic Zone	4
h)	Rainfall	750 mm concentrated in four months

4.0 GENERAL TECHNICAL REQUIREMENT

CONDUCTOR CONSTRUCTION FEATURES

The specification generally covers the technical parameters of AAAC circular, water tight AL-59 DOG and GOAT conductor wounded with conductor screen, Inner layer of TR-XLPE insulation and black coloured outer insulation of XLPE with UV resistant, non tracking and erosion resistant properties as per SS EN 50397-1. Conductor must be water tight with yarn/tape.

The conductor shall therefore be suitable for satisfactory operation under the climatic conditions listed in clause 3.0.

Conductor Code as per EN 50397-1: 2006

Type Code	CC	
Covering Material	S X T	-for semi-conductive screen -for cross-linked Polyethylene -for thermoplastic polyethylene
Conductor material and cross section	According to EN 50182	AL59
Conductor design	W K	-for water tight -for compacted
Rated Voltage *U* in kV	kV	

Covered Conductor Code to be used by BSES-

Sr. No.	Description	Conductor Material	Cable Code
1.	XLPE insulated DOG conductor	Al	CCSX ▲-AL59 WK Ë KV
2.	XLPE insulated GOAT conductor	Al	CCSX ▲-AL59 WK Ë KV

For which -
▲= Nominal Conductor Cross Section in mm^2;
Ë= Rated Voltage (in kV)

4.1CONDUCTOR

The AAAC AL59 conductor should be as per SS 424 08 14 and its latest amendments. All the physical properties, design and dimension, strength of material, testing of material etc. shall be as per SS 424 08 14 and EN 50397-1.

The AL59 conductor shall have accurate chemical composition of Alloy so as to offer excellent corrosion resistance, better strength to weight ratio and improved conductivity. The solution treatment shall be done in a very sophisticated and advanced technology furnace with automatic quenching system.

The AL59 conductor wire shall meet the mechanical strength and resistance of the wire properties as mentioned in the GTP (Annexure-A)/ SS 42408 14.

The bidder should specify the source of raw materials along with the proof of last purchases made. BSES may reject the tender of the Bidders whose raw material manufacturers are found to be supplying any poor quality or Non-standard materials to BSES.

4.2 FILLING

The stranded conductor longitudinally watertight by means of adequate measures as e.g. filling with an adequate mass. The filling mass or other materials for obtaining the longitudinal water-tightness, shall be compatible with the conductor material and the material of the covering

4.3 FREEDOM FROM DEFECTS

The wires shall be smooth and free from all imperfections such as spills, splits, slag inclusion, die marks, scratches, fittings, blow-holes, projections, looseness, overlapping of strands, chipping of Aluminium

layers etc., and all such other defects which may hamper the mechanical & electrical properties of the conductor as also the installation of the conductor at the site etc. Special care shall be taken to keep away dirt, grit etc. during stranding.

4.4 WIRE SIZES

The Aluminium wires for the stranded conductor covered by this standard shall have diameters specified in the guaranteed technical particulars (Annexure-A) shall be as such to comply with the rated DC resistance while maintaining cross section as per the specification and shall be within the tolerances indicated therein.

4.5 JOINTS IN WIRES

4.5.1	Joints not allowed.

4.6 STRANDING

4.6.1	The wires used in the construction of AL59 conductor before stranding and after stranding shall satisfy all the relevant requirements as per the standards indicated in the specification or any other relevant standards with due justification.
4.6.2	In all constructions, the successive layers shall have opposite directions of lay, the outermost layer being right-handed. The wires in each layer shall be evenly and closely stranded.
4.6.3	In conductors having multiple layers of Aluminium wires, the lay ratio of any Aluminium layer shall not be greater than the lay ratio of the Aluminium layer immediately beneath it.

4.7 STANDARD LENGTH

4.7.1	The standard length of the conductor shall be 1000 meter per drum. A tolerance of ± 5% on the standard length shall be permitted. Only one short length with drum length not less than 500 mtr. shall be accepted in last lot. All lengths outside this limit of tolerance shall be treated as rejected drum. Also, two short lengths shall not be allowed in one drum.

4.7.2	Bidder shall also indicate the maximum single length, above the standard length, he can manufacture in the guaranteed technical particulars. This is required for special stretches like river crossing, society crossing etc. BSES reserves the right to place orders for the above length as per the requirement.

4.8 CONDUCTOR SCREEN

Extruded semi conducting material as per BSES approved make (Annexure-B).

Thickness shall be as per Guaranteed Technical Particulars of the specification (Annexure-A). (Tapes are not acceptable)

4.9INNER INSULATION

4.9.1	Extruded TR-XLPE (Tree retardant Cross Linked Poly-Ethylene) insulation with water tree retardant property.
4.9.2	The required compound used shall be from BSES approved sub-vendors only (Annexure-B).
4.9.3	Uniform thickness of insulation shall be within the permissible values as per specification (Annexure-A). Eccentricity check shall be carried out to ensure this.
4.9.4	Insulation colour: Natural

4.10INSULATION OUTER LAYER

4.10.1	Extruded XLPE (Cross Linked Poly-Ethylene) insulation, UV resistant, Non Tracking & Erosion Resistant Black coloured XLPE (SS EN 50397-1).
4.10.2	Make of compound shall as per BSES approved sub-vendors only (Annexure-B).
4.10.3	Uniform thickness of insulation shall be within the permissible values as per specification (Annexure-A). Eccentricity check shall be carried out to ensure this.

4.10.4	Shape of the conductor over the outer layer shall be circular, when manufactured / completed. Ovality check shall be carried out at factory, to detect any abnormality. Manufacturing quality shall be such that cable will retain its circular shape, even after it is laid at site.
4.10.5	Outer layer colour: Black
4.10.6	Covered conductors shall be provided with an identification of origin consisting of a continuous marking of the manufacturer's name or trademark on the surface of the covering. This marking shall be made by embossing. Embossing on outer insulation of conductor shall be as: 1. Type of conductor (conductor name) • CCSX ▲-AL59 WK 11 kV (for DOG conductor) • CCSX ▲-AL59 WK 33 kV (for GOAT conductor) **(for which ▲= Nominal Cross section of conductor in mm^2)** 2. Manufacturer's Name and Trade-mark 3. Name of buyer / purchaser, BSES 4. Month and year of manufacturing 5. Batch No. / Lot No. 6. Purchase order No. and date * Progressive (sequential) length of cable at every meter, starting from zero for every drum shall be printed with laser print.
4.10.7	UV protection on outer layer shall be provided. The Carbon black content shall be as per EN 50397-1
4.10.8	Sample will be sealed during Acceptance test of each and every lot for testing of Chemical composition test of Aluminium and UV test of outer layer which shall be conducted from BIS and NABL (both) accredited third party lab.

4.11 XLPE PROCESS

- Dry Cure process only
- Triple head extrusion only

4.12END SEALING CAP

Both the ends of the conductor shall be sealed with heat shrinkable PVC end cap before dispatching the final drum to BSES.

Drums without end sealing cap will not be accepted by BSES.

4.13 ACCESSORIES

- The Accessories shall abide SS EN 50483, SS EN 50397-1 and SS EN 50397-2 standards.
- All the accessories shall be type tested and the acceptance test shall be carried out as per standard SS EN 50397-2.
- BSES reserves the right to reject the bid if the type test report of accessories is not valid.
- The fittings shall be able to withstand the specific minimum failure load and shall not damage the covering (no damage shall occur which could affect the correct function of the covering) and shall be designed to prevent the ingress of moisture during service.

4.13.1	Anchoring (Dead end) Clamps	• As per NFC 33 041 September 2013/ EN 50483 as per latest amendments • Min. Breaking load = ~30kN • For anchoring or tensioning covered conductor
4.13.2	Plastic insulator ties	For gripping/holding of covered conductors with pin or spool type insulators
4.13.3	Suspension clamps	• Body made of insulating material with climatic resistance which provides an additional insulation between the pole and the cable • A stainless clip insert to avoid any abrasion due to vibrations • Locking and clamping of the bundle by a thermoplastic bolt with fusible wing nut. Shall have provision for removal and further installation. • The suspension clamps shall be so designed that the effect of vibration, both on the covered

		conductor and on the clamps themselves are minimized. The clamps shall be designed to avoid localized pressure or damage to the covered conductor. • The wear resistance of the articulation shall be sufficient to prevent deterioration in service. • Breaking load = ~8kN
4.13.4	Insulating piercing connectors	• To connect a covered tap conductor to a covered main conductor without stripping. • Connector shall be adapted for installation in polluted areas. • Connector shall be resistant to tracking phenomenon.
4.13.5	Pre insulated junction sleeve for AAAC covered conductors	• Connection: water tightness shall be assured by a soft joint • The sleeve shall mention— ○ Number and order of compressions to be made ○ Length to be stripped on the conductor ○ The die to be used
4.13.6	Markings	• Manufacturer's trade mark or logo; • Product code or reference; • Traceability code / batch number; • The minimum and maximum cross section for which the unit is suitable; • Tightening torque or die reference, if applicable; • Recycling code, if any. **NOTE:** Marking shall be provided as per SS EN 50397-2.

5.0 TESTS

5.1 GENERAL

The type test, acceptance test, routine test any other tests specifically demanded by BSES and tests during manufacturing shall be carried out by the manufacturer on the whole **covered conductor** and **accessories without any cost implication to BSES**.

5.1.1	Type tests shall mean those tests, which are to be carried out from BSES approved testing laboratory (CPRI/ERDA) to prove the quality of product and general conformity of the material to this specification in the presence of BSES's representative. These tests shall be carried out on samples prior to commencement of commercial production against the order. The Manufacturer shall indicate his schedule for carrying out these tests in the activity schedule. BSES reserves the right to specify the name of the laboratory also, if so felt. All kind of expenses for type test shall be borne by manufacturer.
5.1.2	Acceptance Test means those tests which are to be carried out on samples of covered conductor taken from each lot offered for pre-dispatch inspection, for the purpose of acceptance of that lot. These tests shall be carried out at the manufacturer's works in presence of BSES's representative before the dispatch of the materials to the site/BSES store with in Delhi.
5.1.3	Routine Test means those tests which are to be carried out on each strand/spool/length of the covered conductor to check requirements, which are likely to vary during production. These tests shall be carried out by the manufacturer on each drum and shall have to furnish the reports to the BSES's representative during his visit for acceptance tests or/and on requirement of BSES.
5.1.4	Tests during manufacturing means those tests which are to be carried out during the process of manufacturing and end inspection by the manufacturer to ensure the desired quality of the end product to be supplied, including all quality control checks & raw material testing.

5.1.5	For all type and acceptance tests, the acceptance values shall be the values guaranteed by the Bidder in the "Guaranteed Technical Particulars ", of their proposal or the acceptance value specified in this specification, whichever is more stringent for that particular test.
5.1.6	BSES reserves the right to visit the plant and can review the manufacturing process as well as quality any time during manufacturing till delivery without any prior intimation to manufacturer.

5.2 TYPE TESTS

Bidder shall submit the Type test reports of AAAC AL-59 Dog and Goat conductor along with the type test reports of Accessories as mentioned in this specification during the submission of technical bid.

5.2.1	All the product including accessories must be of type tested quality from CPRI/ ERDA. Type test reports shall be submitted for the type, size and rating of all the products offers in the bid. BSES reserves the right to conduct type test from BSES PO for which the cost shall be borne by the bidder without any cost implication to BSES. Type tests shall be as per EN 50397-1: 2006 and its latest amendments.

5.3 ACCEPTANCE TESTS

Covered Conductor		
5.3.1	Visual and dimensional check on drum	SS 4240814 and IS: 398(Part IV) 1994/Relevant with latest Amendment.
5.3.2	Visual check for joints, scratches etc. and lengths of conductor	SS 4240814 and IS: 398(Part IV) 1994/Relevant with latest Amendment.
5.3.3	Dimensional check on Aluminium strands	SS 4240814 and IS: 398(Part IV) 1994/Relevant with latest Amendment.
5.3.4	Conductor Resistance test at 20˚C	EN 50397-1-2006
5.3.5	Volume Resistivity	EN 50397-1-2006
5.3.6	High Voltage test	EN 50397-1-2006

5.3.7	Leakage current test	EN 50397-1-2006
5.3.8	Tracking Resistance test	EN 50397-1-2006
5.3.9	Test for thickness of insulation, semicon and outer layer	EN 50397-1-2006
5.3.10	Dimension for insulation and layer	EN 50397-1-2006
5.3.11	Tensile and elongation at break of Insulation and outer layer	EN 50397-1-2006
5.3.12	Hot set test for insulation and outer layer	EN 50397-1-2006
5.3.13	UV test of outer layer from NABL approved lab	EN 50397-1-2006
5.3.14	Water Penetration test	EN 50397-1-2006
5.3.15	Water absorption test	EN 50397-1-2006
5.3.16	Check for lay ratio of various layers.	EN 50397-1-2006
5.3.17	Breaking load test on aluminum strands.	EN 50397-1-2006
5.3.18	Wrap test on aluminum strands.	EN 50397-1-2006
5.3.19	UTS test on welded joint of aluminum strand	As per this specification
5.3.20	Stress Strain test surface condition test	EN 50397-1-2006
5.3.21	Chemical analysis of Aluminium	EN 50397-1-2006
5.3.22	Chemical analysis of Outer layer	EN 50397-1-2006

5.3.23	Eccentricity check of insulation	IS 7098-2
5.3.24	Ageing in air oven of insulation and outer layer	SS 4240814 and IS: 398(Part IV) 1994/Relevant with latest Amendment.
5.3.25	Drum Rewinding	Factory Standard
5.3.26	Cable end sealing	Factory Standard
5.3.27	Drum Stenciling	Factory Standard
5.3.28	Carbon Black Content	EN 50397-1-2006
Accessories		
5.3.29	Visual Examination	EN 50397-2
5.3.30	Dimensional and material verification	EN 50397-2
5.3.31	Marking	EN 50397-2
5.3.32	Tensile test	EN 50397 -2

All above tests shall be carried out after stranding only.

5.4 ROUTINE TESTS

Physical Tests	
5.4.1	Check ensures that the joints are as per specifications.
5.4.2	Check that there are no cuts, fins etc. on the strands.
5.4.3	Check that drums are as per specification.

Electrical Tests	
5.4.4	High Voltage test
5.4.5	Conductor resistance test
Routine Tests on Accessories	
5.4.6	Routine tests on accessories are intended to prove conformance of fittings to specific requirements and are made on every fitting. Routine tests on accessories shall be as per SS EN 50397-2.

Test results from the above tests must appear in the documents forwarded by the vendor for inspection call.

5.5 TESTS DURING MANUFACTURING

5.5.1	Chemical analysis of Aluminium used for making Aluminium strands	As per relevant standard
5.5.2	Anti tracking test on each drum length	As per EN 50397-1:2006

Test report of the same shall be submitted to BSES.

5.6 TESTING CHARGES

5.6.1	The testing charges for the type tests specified and as per relevant standard shall be borne by the bidder. All the manufacturers irrespective of quantity allotted to them, will have to carry out the Type Tests at their own cost and BSES will not have any bearing on this account. The type test reports shall not be older than 5 yrs and shall be valid till the validity of offer
5.6.2	In case of failure in any of the type tests, the manufacturer is required to modify the design of the material if required and repeat the particular type test and same shall pass within three times at his own expenses. The decision of the BSES in this regard shall be final. BSES at its own desecration may also cancel the order at the risk and cost of the manufacturer if the

	material fails twice in the type test.
5.6.3	Type test shall be done from CPRI/ERDA. Ensure that the tests can be completed in these laboratories within the time schedule guaranteed by them in the appropriate schedule. BSES reserves the right to specify the name of the laboratory also, if so felt.
5.6.4	The entire cost of testing for the acceptance and routine tests and tests during manufacture specified herein shall be treated as included in the quoted unit price of conductor.

5.7 ADDITIONAL TESTS

BSES reserves the right of getting done any other test(s) of reasonable nature carried out at Manufacturer's premises, at site, or in any other place/ third party lab in addition to the aforesaid type, acceptance and / or routine tests to satisfy with the fact that the material comply with the specifications. In such case all the expenses will be to Manufacturer's account.

5.8 SAMPLE BATCH FOR TYPE TESTING

5.8.1	The Manufacturer shall offer at least three (3) drums for selection of samples required for conducting all the type tests. BSES reserves the right to choose drums.
5.8.2	The Manufacturer is required to carry out all the acceptance tests and anti tracking test successfully in the presence of BSES representative in their manufacturing facility before dispatch of the selected sample to the testing laboratory for type test.

5.9 TEST REPORTS

5.9.1	Soft copies of type test reports shall be furnished through mail only. BSES may ask original type test report to verify soft copy. BSES will not receive any hard copy for their office record. BSES will give final dispatch clearance after validating type test report.
5.9.2	Record of routine test reports shall be maintained by the Manufacturer at their works for periodic inspection by the BSES's representative and shall be reviewed during inspection.

5.9.3	Test Certificates of tests done during manufacturing shall be maintained by the Bidder. These shall be produced for verification as and when desired by the BSES.

6.0 INSPECTION

6.0.1	BSES representative shall at all times be entitled to have access to the works and all places of the manufacturer where covered conductor shall be manufactured and the representative shall have full facilities for unrestricted inspection of the Manufacturer's works, raw materials, store process and process of manufacture and conducting necessary tests as may be deemed fit, for certifying the quality of product.
6.0.2	The Manufacturer shall keep BSES informed in advance of the time of starting and of the progress of manufacturing of covered conductor in its various stages so that arrangements can be made for inspection.
6.0.3	No material shall be dispatched from its point of manufacture and works before it has been satisfactorily inspected, tested, and necessary dispatch instructions are issued in writing, except for the cases where waiver of Inspection is granted by BSES, and even in this case also, written dispatch instructions will be issued. Any dispatches before the issue of Dispatch Instructions in writing will be liable for rejection and non acceptance by the consignee.
6.0.4	The acceptance of any quantity of material shall in no way relieve the Manufacturer of any of his responsibilities for meeting all requirements of the specification, and shall not prevent subsequent rejection if such material is later found to be defective.
6.0.5	At least 10% of the total number of drums subject to minimum of two in any lot put up for inspection shall be selected at random to ascertain the length of conductor.
6.0.6	The sample cut from any numbers of drums for carrying out any type of tests will be to the manufacturers account.
6.0.7	Anti Tracking test on one sample of each offered lot shall be conducted from 3rd party lab (accredited by both BIS and NABL), cost shall be borne by the manufacturer.

6.0.8	Only soft copy of inspection report shall be furnished by manufacturer through mail. BSES shall not receive any hard copy of report for their office record.

7.0 QUALITY ASSURANCE PLAN

7.1 The bidder shall invariably furnish following information along with his offer, failing which his offer shall be rejected.

7.1.1	Statement giving list of important raw materials names of sub manufacturers for the raw materials, list of standards according to which the raw materials are tested, list of tests normally carried out on raw materials in presence of manufacturer's representative and as routine and / or acceptance during production and on finished goods, copies of test certificates.
7.1.2	Information and copies of test certificates as in mentioned above in respect of bought out accessories.
7.1.3	List of manufacturing facilities available.
7.1.4	Level of automation achieved and list of areas where manual processing exists.
7.1.5	List of areas in manufacturing process, where stage inspections are normally carried out for quality control and details of such tests and inspections.
7.1.6	List of testing equipment available with the Manufacturer for final
7.1.7	Testing of Covered Conductor to be specified. In the case if the manufacturer does not possess all the Routine and Acceptance testing facilities, the bid / PO shall be rejected.
7.1.8	BSES reserves the right for factory inspection to verify the quoted offer. If any of the facts are found to be misleading or incorrect the offer of that Bidder will be out rightly rejected and he may be black listed.
7.1.9	Special features provided to make it maintenance free.

7.2 The bidder shall also submit following information to the BSES along with the technical Bid.

7.2.1	List of raw materials as well as bought out accessories, and the name of manufacturers of raw materials as well as bought out accessories.
7.2.2	Type test certificates of the raw material and bought out accessories.
7.2.3	Quality assurance plan (QAP) with hold points for BSES's inspection.

7.3 The Manufacturer shall submit the routine test certificates (only soft copy through mail) of all the bought-out items, accessories etc.

NOTE: Final QAP shall be approved by BSES.

8.0 DOCUMENTATION

Submission of drawings, calculations, catalogues, manuals, test reports shall be as mentioned below:

8.0.1DRAWING, DATA AND MANUALS

Cross-Sectional drawing shall show every feature of construction, including the thickness/ diameter over every layer. This drawing shall also state the text to be embossed over the outer insulation layer i.e. type/ size etc. of the conductor, drum no./ lot no., sequential length marking over every meter, font sizes to be used, additional text if any etc. Also drum detail markings to be made on both sides of the drum.

8.0.2 DOCUMENTS TO BE SUBMITTED ALONG WITHBID FOR TECHNICAL JUSTIFICATION

Document/Drawing submission shall be as per the matrix given below:

a. All documents/drawings shall be provided in soft copy only in returnable Pen drives
b. Language of the documents shall be English only.
c. Incomplete submission shall be liable for rejection.
d. Document check sheet compliance shall be the first sheet for each submission stage i.e. Technical bid, Drawing Approval, Pre Dispatch, Pre closure
e. No submission is acceptable without check list compliance.

f. Deficient/ improper document/ drawing submission shall be liable for rejection.

g. Order of documents shall be strictly as per the check list.

h. Any document not included in the below table but necessary for detailed engineering shall be deemed to be included in bidder's scope

S.No.	Detail of Document	For Tender	For Approval/Review	Final Submission
1	Guaranteed Technical Particulars (GTP)	Required	Required	Required
2	Deviation Sheet, if any	Required	Required	Required
3	Detailed cross sectional drawing of cable and drum	Required	Required	Required
4	Installation Instructions		Required	Required
5	Manual/Catalogue	Required	Required	Required
6	Cable de-rating factors		Required	Required
7	Type test reports of offered type and rating of cable	Required	Required	Required
8	BIS certificate	Required		
9	Make of Raw Materials	Required	Required	Required
10	Inspection and test reports, carried out in manufacturer's works			Required
11	Routine Test Certificates			Required
12	Test certificates of all the raw materials			Required

- The manufacturing of the conductor shall be strictly in accordance with the approved drawings and no deviation shall be permitted without the written approval of the BSES. All manufacturing and fabrication work in connection with the conductor prior to the approval of the drawing shall be at manufacturer's risk.

Approval of drawing etc. by the BSES shall not relieve the Manufacturer of his responsibility and liability for ensuring correctness and correct interpretation of the latest revision of applicable standards, rules and codes of practices. The conductor shall conform in all respects to high standards of engineering, design, workmanship and latest revisions of relevant standards at the time of ordering and BSES shall have the power to reject any work or material which in his judgment is not in full accordance therewith.

9.0 PACKING & FORWARDING

9.1	The conductor shall be supplied in **non-returnable steel drums** only	
9.2	The drums shall be suitable for wheel mounting and for jetting off the conductor under a minimum controlled tension of the order of 5 KN.	
9.3	The bidder should submit the proposed drum drawings along with the bid. However, the same shall be in line with the requirements as stated herein.	
9.4	Both the ends of the conductor shall be properly sealed to prevent any deterioration of the conductor, due to ingress of water, etc.	
9.5	Shipping Information	The seller shall give complete shipping information concerning the weight, size of each package
9.6	Transit damage	The seller shall be responsible for any transit damage due to improper packing
9.7	Cable Drum handling	The drums shall be with MS spindle plate (with nut-bolts) of adequate size to suit the spindle rods, normally required for handling the drums, according to expected weight of the cable drums.
9.8	Markings	• Drum identification number • Conductor type • Conductor length (meter)

		• PO number and date • SAP item code • Total weight of cable and drum • Manufacturer's name • Buyer's name • Month and year of manufacturing • Direction of rotation of drum • Conductor length final end markings (i.e. reading at inner end reading at the outer end, just before packing shall be marked on the drum)
9.9	Delivery Schedule	• Delivery period Start Date : From date of LOI / LOA • Delivery period End Date : As agreed with manufacturer • Material dispatch Clearance : After inspection by purchaser
9.10	Accessories	• Accessories shall be packed separately item wise with proper protection to prevent damage and easy handling. • Marking • Material description • Type • Dimension • PO number and date • SAP item code • Total weight of • Manufacturer's name • Buyer's name • Month and year of manufacturing • Storage type

10.0 DEVIATIONS

a) Deviations from this specification shall be listed separately by bidder clause wise (format given below) along with optional offer and has to submit the list along with bid/quotation. BSES will review the deviations and if BSES is agreed with the deviation, seller has to take written confirmation from BSES on deviation during tender evaluation.

b) In the absence of any separate list of deviations from the bidders with bid as well as written confirmation from BSES on deviations, it will be assumed by the Buyer that the Seller complies with the Specification fully.

c) Any deviations mentioned in any other submitted bid documents (i.e.in filled GTP, Catalog, BSES old approval, buyer's/seller's standards etc) by seller without separate deviation sheets will not consider as a deviation from this tech spec at any stage of contract.

Deviation Sheet Format-

Sino	Document Name	Clause No.	Deviation	Reason	Merits to BSES

ANNEXURE-A GUARANTEED TECHNICAL PARAMETERS

Note:

1) Every data shall be mentioned.
2) Seller may submit separate GTP for the cable, as suitable.
3) GTP shall be read in line with purchaser's Project Site Specific Requirement.

S.No	Description	AL59 DOG	AL59 GOAT
1	Guarantee Period	60 months from date of commissioning / 66 months (from date of receipt at purchaser's store) whichever is earlier	

S.No	Description	AL59 DOG		AL59 GOAT	
2	Standard according to which the conductor will be manufactured and tested	SS EN4240814 SS EN 4240813 SS EN 50397-1			
3	Quality of material & standard to which conform	SS EN 42 40814 & IS-9997			
4	Type of covered conductor	AAAC (AL-59) Covered Conductor			
5	Number of strands and wire diameter in mm	7/4.72 mm		37/3.71mm	
6	Number Of Strands – Nos.	7		37	
7	Diameter Of Strand – mm. I) Strands a) Nominal	4.72		3.71	
	b) Maximum	4.77		3.75	
	c) Minimum	4.67		3.67	
	II) Overall Of Conductor	14.16		25.97	
8	Nominal Cross Sectional Area (mm^2) Of- a) Whole Conductor b) Each Strand	122.5 17.50		400 10.81	
9	Laying Of Strands – Nos.	**Max**	**Min**	**Max**	**Min**
	a) Centre wire				
	b) First Layer	14	12	14	12
	c) Second Layer	-	-	13	11

S.No	Description	AL59 DOG		AL59 GOAT	
	d) Third Layer	-	-	13	11
	e) Fourth Layer	-	-	-	-
10	Weight (Excl. Wt. Of Grease) – Kg/Km. a) Whole Conductor	As per Manufacturer			
	b) Strand (At Nominal Dia.)	As per Manufacturer			
11	Calculated D.C. resistance at 20°C (Ω/Km) (Max.) a) Whole Conductor	0.2400		0.07411	
	b) Strand	1.66		2.69	
12	Ultimate Tensile Stress – KN a) Whole Conductor	28.2		96	
	b) Strand i) Before Stranding	4.02		2.59	
	ii) After Stranding	3.82		2.46	
13	Modulus of Elasticity –MPA	As per Manufacturer			
14	Coefficient of linear expansion – per deg. C.	$23.0x10^{-6}$		$23.0x10^{-6}$	
15	Chemical Composition	The wire material shall be AL59 Aluminium alloy meeting the requirements on Resistivity, tensile strength, DC resistance etc.			
16	Resistivity – Ω mm^2 / Mtr.				
17	a) Continuous minimum current rating of conductor in still air at ambient Temperature (40˚C)	375 A		828 A	
	b) Temperature rise for the above 55˚C	55		55	

S.No	Description	AL59 DOG	AL59 GOAT
18	Minimum continuous current rating of conductor at 95˚C corresponding of ambient temperature of 50˚C	375 A	828 A
19	Lay Ratios a) First Layer i) Maximum ii) Minimum	 14 12	 14 12
	b) Second Layer i) Maximum ii) Minimum	NA	13 11
	c) Third Layer i) Maximum ii) Minimum	NA	13 11
	d) Fourth Layer i) Maximum ii) Minimum	NA	NA
20	Minimum tensile strength of the finished strand with joint if any made in base rod or semi finished wire a) Aluminium Alloy	Min. 90% of wire before stranding	Min. 90% of wire before stranding
21	Conductor Screen		
	Material	Extruded semi-conducting layer (As per Cl. 4.8)	
	Nominal thickness (mm)	0.3	0.3

S.No	Description	AL59 DOG	AL59 GOAT
22	Insulation inner layer	(As per Cl. 4.9)	
	Material	TR-XLPE	TR-XLPE
	Nominal thickness (mm)	1.2	2.43
23	Insulation outer layer	(As per Cl. 4.10)	
	Material	UV stabilized, weather resistant and tracking resistant Black XLPE with UV RESISTANT,NON TRACKING & EROSION RESISTANT (EN 50397-1)	
	Nominal thickness (mm)	1.1	1.2
24	Approx. overall diameter (mm)	As per Manufacturer	
25	Approx. weight (kg/km)	As per Manufacturer	
26	Max. continuous operating conductor temperature (˚C)	95	95
27	Embossing on Insulation outer layer	As per Clause 4.10.6	
28	Standard packing length	1000 ± 5%	1000 ± 5%

ANNEXURE-B MAKE LIST

S.No.	Raw Materials		Name of the Manufacturers
1.	TR-XLPE/XLPE Compound	1	Dow Chemicals , U.S.A.
		2	Borealis , Sweden

		3	Hanwha , South Korea
2.	Semi-Conducting Compound	1	Dow Chemicals, U.S.A.
		2	Borealis , Sweden
		3	Hanwha , South Korea
3.	Aluminium Rod	1	Bharat Aluminium Co. Ltd. (BALCO)
		2	Hindustan Aluminium Co. Ltd. (HINDALCO)
		3	National Aluminium Co. Ltd. (NALCO)
		4	Vedanta (Sesa Sterlite)

BSES

Technical Specification of

ACSR CONDUCTORS

(Insulated & Bare)

Specification no – BSES-TS-05-ACSR-R0

Rev:		0
Date:		04 Apr 2022
Prepared by	Abhishek Vashistha	
	Rohit Patil	
Reviewed by	Puneet Duggal	
	Amit Tomar	04.04.2022
Approved by	Gaurav Sharma	
	K. Sheshadri	04/04/22

Contents

1. SCOPE 3
2. CODES AND STANDARDS 3
3. DESIGN 3
4. QUALITY ASSURANCE 5
5. INSPECTION AND TESTING 5
6. EMBOSSING & PRINTING 7
7. APPROVED VENDORS & SUPPLIERS OF RAW MATERIAL 7
8. DOCUMENT SUBMISSION MATRIX 7
9. ANNEXURE - I 8
10. ANNEXURE - II 10

1. SCOPE

1.1 This specification covers the design, manufacture, testing at manufacturer's works, packing and delivery at site of the ACSR conductor along with necessary accessories.

1.2 The conductor and its accessories shall be complete with all fittings and components necessary for the effective working and efficient performance and satisfactory maintenance under the various operating conditions specified. All such parts shall deemed to be included within the scope of supply where specifically included or not in this specification in the tender schedule. The successful bidder shall not eligible for any extra charge for such accessories.

1.3 The specification includes both insulated & un-insulated ACSR conductor. Following table suggest requirement of conductors under insulated & un-insulated type as per tender enquiry

Conductor name	Zebra	Goat	Panther	Wolf	Dog	Rabbit	Squirrel
Insulated	X	X	X	X	√	√	√
Un-Insulated	√	√	√	√	√	√	√

2. CODES AND STANDARDS

2.1 All equipment and material shall be designed, manufactured and tested in accordance with the latest applicable Indian Standard, IEC standard and CBIP manuals enlisted in the appendix 1, except where modified and / or supplemented by this specification.

2.2 Equipment and material confirming to any other standard, which ensures equal or better quality, may be accepted. In such case copies of English version of the standard adopted shall be submitted by the vendor with the offer

2.3 The electrical installation shall meet the requirement of Indian Electricity Rules as amended up to date; relevant IS code of practice and Indian electricity act. In addition other rules & regulations applicable to the work shall be followed. In case of any discrepancy the most stringent & restrictive one shall be binding.

2.4 The equipment offered shall in general comply with the latest issues including amendments of the standards enlisted in the appendix 1 but not restricted to it.

3. DESIGN

3.1 General

- All steel strands shall be smooth, uniform and free from all imperfections, such as spills and splits, die marks, scratches, abrasions and kinks after drawing and also after stranding.
- The finished material shall have minimum brittleness, as it will be subjected to appreciate vibration while in use.
- The steel strands shall be hot dip galvanized and shall have a maximum zinc coating of 240gms/sq.mm after stranding. The zinc coating shall be smooth, continuous of uniform thickness, free from imperfections and shall withstand three and a half dips after stranding in standard Price test.
- The steel wire rod shall be of such quality and purity that, when drawn to the size of the strands specified and coated with zinc, the finished strands shall be of uniform quality and have the same properties and characteristic as prescribed in relevant ASTM/IS/IEC standards.
- To avoid susceptibility towards wet storage stains (while rust), the finished material shall be provided with a protective coating of boiled linseed oil.
- The finished conductor shall have a smooth surface without any surface cuts, abrasions, scuff

marks and shall be free from dirt, grit etc.

- The Steel wire shall be made from materials produced either by the acid or basic Open Hearth process or by electric process. No steel wire drawn from 'Bessemer processes shall be used. The steel wire shall not contain sulphur or phosphorous exceeding 0.5% and the total of sulphur and phosphorous shall not exceed 0.085%.
- The steel strands shall be performed and post formed in order to prevent spreading of strands in the event of cutting of composite core wire. Care shall be taken to avoid damages to galvanization during performing and post forming operations.

3.2 MATERIALS

- The aluminium strands shall be hard drawn from electrolytic aluminum rods having a purity of not less than 99.5% and a copper content not exceeding 0.04%.
- The steel wire strands shall be drawn from high carbon steel wire rods produced by either the acid or basic open hearth process, the electric furnace process, or the basic oxygen process and shall conform to the following requirements as to the chemical composition:

Element	% composition
Carbon	0.50 to 0.85
Manganese	0.50 to 1.10
Phosphorus	Not more than 0.035
Sulphur	Not more than 0.045
Silicon	0.10 to 0.35

- The zinc used in galvanizing shall be electrolytic high grade zinc of 99.95% purity. It shall conform to and satisfy all the requirements of IS/IEC.

3.3 STANDARD LENGTH

- The standard length of the conductor shall be 3000 meters. A tolerance of +/-5% on the standard length offered by the Bidder shall be permitted. All lengths outside this limit of tolerance shall be treated as random lengths.
- Random lengths will be accepted provided no length is less than 70% of the standard length and the total quantity of such random length shall not be more than 10% of the total quantity ordered. When one number random length has been manufactured at any time, five (5) more individual lengths, each equivalent to the above random length with a tolerance of +/-5% shall also be manufactured and all the above six random lengths shall be dispatched in the same shipment. At any point, the cumulative quantity supplied including such random lengths shall not be more than 12.5% of the total cumulative quantity supplied including such random lengths. However, the last 20% of the quantity ordered shall be supplied only in standard lengths as specified.
- Bidder shall also indicate the maximum single length, above the standard length, he can manufacture in the guaranteed technical particulars of offer. This is required for special stretches like river crossing etc. The employer reserves the right to place orders for the above lengths on the same terms and conditions applicable for the standard lengths during the pendency of the Contract.

3.4 JOINT IN WIRES

- **Aluminium wires**
  No joints shall be permitted in the individual wires in the outer most layer of the finished conductor. However, joints in the 12 wire and 18 wire inner layer of the conductor shall be allowed but these joints shall be made by cold pressure butt welding and shall be such that no such way joints are within 15 meters of each other in the complete stranded conductor. The joints shall withstand a stress of not less than the breaking strength of individual strand guaranteed.

- **Steel Wires**
  There shall be no joint of any kind in the finished wire entering into manufacture of the non strand joint or strand splices in any length of the complete stranded steel core of the conductor.

3.5 INSULATON

S. No.	Particular	Data
1	Voltage Grade	1.1 kV
2	Insulation Material	XLPE
3	Nominal Thickness of Insulation	As per table 3 of IS 7098 P-1

4. QUALITY ASSURANCE

4.1 Vendor shall follow his standard procedures for quality assurance and control. These standard procedures including quality assurance plan shall be submitted to the purchaser for approval.

4.2 The procedures shall be in such a form as to clearly indicate the manufacturing sequence and major inspection points and to reference Bidder's test in inspection procedures.

4.3 Manufacturing and quality control procedures shall be available for audit to the Purchaser and / or its representatives at the place of manufacture.

4.4 The Purchaser and/or its representative reserves the right to inspect the equipment at the point of manufacture and witness factory and other such tests as may be necessary to ensure conformance to the specification.

4.5 The Purchaser and / or its representative shall inspect the Vendor facilities prior to award of contract.

4.6 The Purchaser and/or its representative may conduct surveillance of the Vendor facilities for compliance to his standard procedures of quality assurance and quality control while work is in progress.

5. INSPECTION AND TESTING

5.1 INSPECTION

- The purchaser's representative shall at all times be entitled to have access to the works and all places where conductor shall be manufactured and shall have full facilities for unrestricted inspection of the manufacturer works, raw materials and process of manufacture for conducting necessary tests as detailed herein.
- The manufacturer shall keep the Employer informed in advance of the time of starting and of the progress of manufacture of conductor in its various stages so that arrangements can be made for inspection.
- No material shall be dispatched from its point of manufacture before it has been satisfactory inspected and tested, unless the inspection is waived off by the purchaser in writing. In the latter

case also the conductor shall be dispatched only after satisfactory testing for all tests specified herein have been completed.

- The acceptance of any quantity of material shall in no way relieve the manufacturer of any of his responsibilities for meeting all requirements of the Specification and shall not prevent subsequent rejection if such material is later found to be defective.

5.2 TESTS

The following acceptance and routine tests and tests during manufacture shall be carried out on the conductor. For the purpose of this clause, the following shall apply

- Acceptance tests shall mean those tests which are to be carried out on samples taken from each lot offered for pre-dispatch inspection, for the purpose of acceptance of that lot.
- Routine tests shall mean those tests, which are to be carried out on each strand/spool/length of the conductor to check requirements which are likely to vary during production.
- Tests during manufacture shall mean those tests, which are to be carried out during the process of manufacture to ensure the desired quality of the end product.
- For all acceptance tests, the acceptance values shall be the values shall be the values guaranteed by the Bidder in the guaranteed technical particulars of his proposal or the acceptance value specified in this Specification, whichever is more stringent for that particular test.

5.3 **TYPE TESTS**

Supplier shall submit all Type test report with validity of 5 years, along with the bid. The entire test certificate as per relevant IS/IEC shall be submitted for purchaser review. In case type tests have not been conducted earlier the same has to be carried out without any cost implication to purchaser. Purchaser has the right of witnessing any of the tests for which the supplier has to give prior notice before the date of conducting such tests. The unit rates for each type of the tests to be carried out shall be indicated in the offer. Requirement of type test shall be as listed below. Type test charges shall not be included as part of main price to be indicated in the offer.

The following tests shall be performed on a typical length of conductor. The cost of these tests shall be quoted separately.

a) Surface condition test
b) Test for ultimate breaking load on stranded conductor
c) Stress strain test
d) Measurement of diameter of individual aluminium and steel wires.
e) Measurement of lay ratio.
f) Breaking load of individual wires
g) Ductility test
h) Wrapping test
i) Resistance test and
j) Galvanizing test

5.4 ACCEPTANCE TESTS

a) Visual and dimensional check by drum
b) Visual check for joints scratches etc and lengths of conductor by rewinding
c) Dimensional check on steel and Aluminium strands

d) Galvanizing test on steel strands
e) Torsion and elongation test on steel strands
f) Check for lay ratio of various layers
g) Breaking load test on steel and aluminium strands
h) Wrap test on steel and aluminum strands
i) DC resistance test on aluminium strands
j) UTS Test on welded joint of strands
k) Tensile test (For Aluminium)
l) Test for thickness of insulation
m) Tensile strength & elongation at break test for insulation
n) High voltage test
o) Insulation resistance (Volume resistivity) test

All above tests except (j-o) shall be carried out on aluminium and steel strands after stranding only.

5.5 ROUTINE TESTS

a) Check to ensure that the joints are as per Specification.
b) Check that there are no cuts, fins etc on the strands.
c) Check that drums as per Specification.
d) All acceptance test as mentioned above to be carried out on each coil

6. EMBOSSING & PRINTING

Following text shall be embossed on insulated conductor only

a) BSES, PO No. & Date, Manufacturing month & year, Type of Conductor- one each meter length
b) Printing of running meter No.- on each meter length- White colour

7. APPROVED VENDORS & SUPPLIERS OF RAW MATERIAL

S. No	Material	Approved Suppliers
1	Steel	TATA /SAIL
2	Aluminium	NALCO/BALCO/HINDALCO
3	Insulation	KLJ/KALPENA/DOW/HANWHA/BOREALIS

8. DOCUMENT SUBMISSION MATRIX

Document/Drawing submission shall be as per the matrix given below:

a. All documents/drawings shall be provided in soft copy only via mail or in returnable Pen drives
b. Language of the documents shall be English only.
c. Document check sheet compliance shall be the first sheet for each submission stage i.e. Technical bid, Drawing Approval, Pre Dispatch, Pre closure
d. No submission is acceptable without check list compliance.
e. Deficient/ improper or incomplete document/ drawing submission shall be liable for rejection.
f. Order of documents shall be strictly as per the check list.

g. Any document not included in the below table but necessary for detailed engineering shall be deemed to be included in bidder's scope

S No.	Detail of Document	Bid	Approval	Pre Dispatch
1	Guaranteed Technical Particulars (GTP)	Required	Required	
2	Deviation Sheet, if any	Required	Required	
3	Detailed cross sectional drawing of ACSR Conductor	Required	Required	
4	Dimensional drawing of drum	Required	Required	
5	Type test reports of offered type and rating of ACSR conductor	Required	Required	
6	BIS certificate	Required		
7	Complete cable catalogue	Required		
8	Make of Raw Materials	Required	Required	
09	Inspection test reports and Routine Test Certificates carried out in manufacturer's works			Required
10	Test certificates of all raw materials			Required
11	Calibration test reports of instruments			Required

9. ANNEXURE - I

CONDUCTOR DATA SHEET

S.N.	Particulars	Conductor Details						
1	Conductor Name	Zebra	Goat	Panther	Wolf	Dog	Rabbit	Squirrel
2	Stranding and wire diameter	54/3.18 mm Al. + 7/3.18 mm Steel	30/3.71 mm Al. + 7/3.71 mm Steel	30/3.0 mm Al. + 7/3.0 mm Steel	30/2.59 mm Al. + 7/2.59 mm Steel	6/4.72 mm Al. + 7/1.57 mm Steel	6/3.35 mm Al. + 1/3.35 mm Steel	6/2.11 mm Al +1/2.11 mm Steel
3	Number of strands							
3a	Core	1	1	1	1	1	1	1
3b	1st layer	6	6	6	6	6	6	6
3c	2nd Layer	12	12	12	12	6	--	--
3d	3rd layer	18	18	18	18	--	--	--
3e	4th Layer	24	--	--	--	--	--	--
4	Sectional	428.9 Sq.	324.30	212.10	158.10	105.00	52.88 Sq.	20.98 Sq.

	Area of Aluminum	mm	Sq. mm	Sq. mm	Sq. mm	Sq. mm	mm	mm
5	Total Sectional Area	484.5 Sq. mm.	400.00 Sq. mm	261.50 Sq. mm	194.90 Sq. mm	118.50 Sq. mm	61.70 Sq. mm	24.48 Sq. mm
6	Overall Diameter	28.62 mm	25.97 mm	21.00 mm	18.13 mm	14.15 mm	10.05 mm	6.33 mm
7	Approx. Weight							
7a	Aluminum	1186 kg/Km	878 kg/Km	587 kg/Km	428 kg/Km	287 kg/Km	145 kg/Km	58 kg/Km
7b	Steel	435 kg/Km	610 kg/Km	387 kg/Km	298 kg/Km	107 kg/Km	69 kg/Km	27 kg/Km
7c	Total	1621 kg/Km	1488 kg/Km	974 kg/Km	726 kg/Km	394 kg/Km	214 kg/Km	85 kg/Km
8	Calculated DC resistance at 20°C	0.06868 Ohm/Km	0.09106 Ohm/Km	0.13900 Ohm/Km	0.18710 Ohm/Km	0.27920 Ohm/Km	0.55240 Ohm/Km	1.39400 Ohm/Km
9	Minimum UTS	130.32 KN	137.00 KN	89.67 KN	67.34 KN	32.41 KN	18.25 KN	7.61 KN

Lay Ratio of Aluminum Conductors, Steel Reinforced

S. No.	**Conductor**	**No. of wire**		**Ratio of Aluminum Wire Diameter to Steel wire Diameter**	**Lay ratio to Steel core (6 wire ratio)**		**Lay ratio for Aluminum wire**					
							Outermost Layer		**Layer immediately beneath Outermost Layer**		**Innermost Layer of conductors with 3 Aluminum wire Layers**	
		Aluminum	Steel		Min	Max	Min	Max	Min	Max	Min	Max
1	Zebra	6	1		-	-	10	14	-	-	-	-
		6	7		13	28	10	14	-	-	-	-
		30	7		13	28	10	14	10	16	-	-
		42	7		13	28	10	14	10	16	10	17
		54	7		13	28	10	14	10	16	10	17

Diameter of Aluminum & Steel Strands

S. No.	Conductor Name	Aluminum			Steel		
		Nominal	Maximum	Minimum	Nominal	Maximum	Minimum
1	Zebra	3.18	3.21	3.15	3.18	3.24	3.12
2	Goat	3.71	3.74	3.68	3.71	3.76	3.65
3	Panther	3.00	3.03	2.97	3.00	2.94	2.06
4	Wolf	2.59	2.62	2.56	2.59	2.64	2.54
5	Dog	4.72			1.57		
6	Rabbit	3.35	3.32	3.38	3.35	3.42	3.28
7	Squirrel	2.11	2.13	2.9	2.11	2.15	2.07

10. ANNEXURE - II

VENDOR DATA (GURANTEED TECHNICAL PARTICULARS)(SEPARATE DATA SHEET SHALL BE SUBMITTED FOR EACH TYPE OF CONDUCTOR)

SI.NO.	DESCRIPTION	BSES Requirement	PARTICULARS
1	Name of the material offered	XLPE Insulated ACSR Conductor	
2	Maker's Name	Required	
3	Address and Phone No.		
4	Reference Standards	IS-398Pt-1, IS 1778 , IS 7098	
5	No.of strands/diameter of Galvanised steel wire/Al strand	Required	
6	Apporx.Dia over covered conductor		
7	Minimum Ultimate Tensile Strength of Conductor	18.25	
8	Direction Of Lay	Successive layers shall have opposite directions of lay outermost layer being Right Handed	
9	Lay ratio of Aluminum wire		
10	Continuous max. current rating of ACSR	Required	
	Conductor in still air at an ambient		
	temperature at 45 Deg C		
11	Temperature rise for the above current	Required	
12	Short Circuit current rating of ACSR	Required	
	Conductor for 1sec		
13	Module of elasticity of complete	79	

	Conductor		
14	Coefficient of linear expansion of	19.1x10^6	
	complete conductor		
15	Cross sectional area	Required	
16	Nominal aluminium area	Required	
16.1	Conductivity and Grade of Al	61% EC Grade	
16.2	% Composition of steel wire	As Per spec	
17	Chemical composition certificate from NABL approved lab	Required	
18	Minimum breaking load		
18.1	Aluminum strand (After Stranding)	Required	
18.2	Galvanised steel wire (After Stranding)	Required	
19	Total Conductor	Required	
20	Max.Working tension of conductor	75% of UTS	
21	Resistance of Al conductor at 20Deg	Required	
	C(Max)		
22	Weight		
22.1	Aluminium strand	Required	
22.2	Steel Strand	Required	
22.3	Conductor without insulation	Required	
22.4	Conductor with insulation	Required	
23	Purity of AL.rod in %age	Required	
24	Zinc coating on steel wire		
24.1	Grade of Zinc	Electrolytic High Grade Zinc not less Than 99.95% purity as per IS209-1992	
24.2	Min wt of Zinc Coating	Required	
24.3	No.& duration of dips of Zinc coating (Before Stranding)	Required	
25	Type of Insulation	XLPE Type as per IS 7098	
25.1	Nominal thickness of XLPE insulation	1.6	
25.2	Min thickness of XLPE insulation	1.5	
25.3	Color of XLPE insulation	Black	
25.4	Tensile strength of Insulation (Min)	12.5	
25.5	Percentage elongation at break of Insulation(Min)	200	
25.6	Insulation resistance test (Volume resistivity) Min	1x10^14 at 27deg C 1x10^12 at 90deg C	

26	Chemical composition test certificate of XLPE insulation material	Required, shall be weather proof and have property of protection against ultraviolet light having 2.5% black carbon content	
27	Drum	Required	
27.1	Ref IS	IS-1778-1980	
27.2	Gross weight of drum including weight of Conductor	Required	
27.3	Standard length of each piece of Conductor	3Km	
27.4	Non standard length	length	
28	Order quantity tolerance	(+/-)2%	Yes/No
29	Embossing	Name of manufacturer, Manufacture year, Manufacturing month, Type of conductor, BSES, P.o no & date	

ANNEXURE -I

PRICE FORMAT

PART-A

ITEM DESCRIPTION	QTY	UoM	EX-WORKS RATE PER KM	UNIT FREIGHT	GST	UNIT LANDED	TOTAL LANDED COST
Supply of XLPE Insulated Dog conductor	50	KM					
Supply of XLPE Insulated Rabbit conductor	6	KM					
Supply of XLPE Insulated Squirrel conductor	6	KM					
CNDCTR,ACSR ZEBRA UNINSUL	2	KM					

PART-B

ITEM DESCRIPTION	QTY	UoM	EX-WORKS RATE PER KM	UNIT FREIGHT	GST	UNIT LANDED	TOTAL LANDED COST
CNDCTR,ACSR DOG;XLPE COVERED	80	KM					
CLMP,ELEC,TENSION CLMP	960	Nos					
TIE,POLYMERIC;12X160MM;NYLON	1520	Nos					
CNCTR,CBLE/CNDUIT,PIERCING;16/95 SQMM	160	Nos					
CNCTR,PI	80	Nos					
CNCTR,MECH,PIERCING;1IN;BARE TO CC	80	Nos					
APD,FAB SRC,MID SPAN CMPRSN JNT FOR AAAC	240	Nos					

CONTROLLED COPY

Reliance Energy
A Dhirubhai Ambani Enterprise

Specifications

Lightning Arrestor

(66 & 33 KV)

Specification no. : SP-LALU-01-R0

Prepared By		Reviewed By		Approved By		Revision	Date
Name	Sign.	Name	Sign.	Name	Sign.		
AAG		HPB		DG		0	29-Jan-2005

Index

1.0 General Specification…… 03-08

2.0 Annexure – A : Scope & Documentation……09-10

3.0 Annexure – B : Ambient Conditions……....11-11

4.0 Annexure – C1 : Guaranteed Tech. Particulars for 66KV Lightning Arrester.....12-14

5.0 Annexure – C2 : Guaranteed Tech. Particulars for 33KV Lightning Arrester…..15-17

6.0 Annexure – D : Recommended spares (Data by supplier)……18-18

General Specification

1.0.0 Codes & Standards

Materials, equipment and methods used in the manufacture of Lightning Arresters shall conform to the latest edition of following –

National Standards

Standard Code	Standard Description
	Indian Electricity Rules
	Indian electricity act
	CBIP manual
IS : 3070 – Part 3	Lightning Arresters for Alternating Current Systems
IS : 2071 - Part I	Method of high voltage testing
IS : 2629 - 1985	Recommended Practice for Hot-Dip Galvanizing of Iron and Steel
IS : 5621 - 1980	Hollow insulators for use in electrical equipment
IS : 6639 - 1972	Specification for Hexagon Bolts for Steel Structures

International Standards

Standard Code	Standard Description
IEC 60099-4-2001	Metal-Oxide Surge Arresters without gaps for AC Systems

Important Note :

In the event of direct conflict between various order documents, the precedence of authority of documents shall be as follows –

i. Specification including applicable codes, standards
ii. Guaranteed Technical Particulars (GTP)
iii. Approved Vendor Drawings

Sr. No.	Description	Requirement / Rating
2.0.0	**Design Features**	Common for both 66KV and 33 KV Lightning Arresters
2.1.0	Application	To be used for protection of transformers, circuit breakers and other sub-station equipment against lightning and switching surges.
2.2.0	Type of Lightning Arrester	Gap-less metal oxide type (ZnO Type).
2.3.0	Pressure relief device	Pressure relief device of class 40 KA shall be provided.
2.4.0	Accessories	Refer Annexure-A : Scope of Supply.
2.5.0	Mounting	LA mounting vertically on steel structures with insulating bases. Surge counters in weather proof enclosures suitable for mounting on structure of lightning arrester.
2.6.0	Line side Terminal Connectors	Suitable for ACSR Zebra/ Goat conductor (Refer GTP)
2.7.0	Ground Terminal Connectors	Suitable for 50x6 mm GS flat
2.8.0	Surge Counter	Non-resettable type
2.9.0	Name plate Marking	Following minimum information must be marked – i) Name of the manufacturer ii) Type and serial No. iii) Model No. iv) Rated voltage v) Max. continuous Operating Voltage vi) Nominal discharge current vii) Pr. Relief Class viii) Identification mark on each separately housed unit to enable it to be replaced in correct position after the multiunit arrester has been dismantled.
3.0.0	**Approved Make of Components**	Common for both 66KV and 33 KV Lightning Arresters
3.1.0	Insulators	JSI / WSI/ BHEL/ Modern/ Saravana

Sr. No.	Description	Requirement / Rating
4.0.0	**Testing & Inspection**	
4.1.0	Internal Test	Manufacturer shall carry out comprehensive inspection and testing during manufacture of the equipment.
4.2.0	Type test	The product must be of type tested quality. Type test reports shall be submitted for the type, size & rating of equipment offered along with bid. If the manufacturer's lab is accredited by govt./ authorised body then it shall be acceptable for type testing.
4.3.0	Routine test	As per relevant IS / IEC.
4.4.0	Acceptance test	As per relevant IS / IEC.
4.5.0	Test Witness	
4.5.1		The Buyer reserves the right to witness all tests specified on completed product.
4.5.2		The Buyer reserves the right to inspect the product at the Sellers works at any time prior to dispatch, to verify compliance with the specifications.
4.5.3		In-process and final inspection call intimation shall be given in advance to purchaser.
4.6.0	Tests on fitting and Accessories	As per Manufacturer's Standards and relevant IS / IEC.
5.0.0	**Drawing, Data & Manuals**	
5.1.0	To be submitted along with bid	The seller has to submit :
	i)	Tentative GA / cross sectional drawing of product showing all the views / sections.
	ii)	Detailed reference list of customers already using the offered product during the last 5 years with particular emphasis on units of similar design and rating.
	iii)	Completely filled GTP
	iv)	Deviations from this specification. Only deviations approved in writing before award of contract shall be accepted.
	v)	Details of manufacturer's quality assurance standards and program and ISO 9000 series or equivalent national certification.

Sr. No.	Description	Requirement / Rating
	vi)	Type test reports shall be submitted for the type, size & rating of product / equipment offered along with bid. In case the type test report for identical product is not available then type test report of nearby size/ rating shall be submitted for review. They shall be considered valid for 5 years from date of test performed on product /equipment.
	vii)	Complete product catalogue and Manual along with the bid.
	viii)	Recommended spare parts and consumable items for five years of operation with prices and spare parts catalogue with price list for future requirements
	ix)	Bill of material with make, model & quantity of items.
5.2.0	To be submitted after award of contract	The seller has to submit : for buyer's Approval (A) / Reference (R)
	i)	Program for production and testing (A)
	ii)	Guaranteed Technical Particulars (A)
	iii)	Calculations to substantiate choice of electrical, structural, mechanical component size / ratings (A)
	iv)	a) Detailed dimension drawing for all components, ge b) Drawings of major components (A) c) Rating and diagram plate (R)
	v)	Detailed loading drawing to enable the buyer to design and construct foundations (as applicable) (R)
	vi)	Transport / Shipping dimensions with weights (R)
	vii)	Detailed Bill of Materials for all fittings and accessories with their make, model & tag no. etc. (A)
	viii)	Detailed installation and commissioning instructions (R)
	ix)	Quality plan (A)
5.3.0	Submittals required prior to dispatch	The seller has to submit :
	i)	Inspection and test reports, carried out in manufacturer's works (R)
	ii)	Test certificates of all bought out items
	iii)	Operation and maintenance Instruction as well as trouble shooting charts/ manuals
5.4.0	Drawing and document sizes	Standard size paper A0, A1, A2, A3, A4
5.5.0	No of drgs. / Documents required at different stages	As per Annexure- A

Sr. No.	Description	Requirement / Rating
6.0.0	**Packing**	
6.1.0	Packing Protection	Against corrosion, dampness, heavy rains, breakage and vibration
6.2.0	Packing for accessories and spares	Robust wooden non returnable packing case with all the above protection & identification Label
6.3.0	Packing Identification Label	In each packing case, following details are required :
	i)	Individual serial number
	ii)	Purchaser's name
	iii)	PO number (along with SAP item code, if any) & date
	iv)	Equipment Tag no. (if any)
	v)	Destination
	vi)	Manufacturer / Supplier's name
	vii)	Address of Manufacturer / Supplier / it's agent
	viii)	Description and Quantity
	ix)	Country of origin
	x)	Month & year of Manufacturing
	xi)	Case measurements
	xii)	Gross and net weights in kilograms
	xiii)	All necessary slinging and stacking instructions
7.0.0	**Shipping, Handling & Storage**	
7.1.0	Shipping Information	The seller shall give complete shipping information concerning weight, size etc. of each package.
7.2.0	Shipping Constraints	The seller shall ascertain at an early date before the commencement of manufacture, any transport limitations such as weights, dimensions, road culverts, overhead lines, free access etc. from the manufacturing plant to the project site. Bidder shall furnish the confirmation that the proposed packages can be safely transported, as normal or oversize packages, upto the site. Any modifications required in the infrastructure and cost thereof in this connection shall be brought to the notice of the Purchaser.
7.3.0	Transit Damage	The seller shall be responsible for any transit damage due to improper packing.
7.4.0	Handling & Storage	Manufacturer's instructions shall be followed. Detail handling & storage instruction sheet / manual needs to be furnished before commencement of supply.

Sr. No.	Description	Requirement / Rating
8.0.0	**Quality Assurance**	
8.1.0	Vendor quality plan	To be submitted for purchaser approval
8.2.0	Inspection points	To be mutually identified & agreed in quality plan
9.0.0	**Progress Reporting**	
9.1.0	Outline Document	To be submitted for purchaser approval for outline of production, inspection, testing, inspection, packing, dispatch, documentation program
9.2.0	Detailed Progress report	To be submitted to Purchaser once a month containing
	i)	Progress on material procurement
	ii)	Progress on fabrication (As applicable)
	iii)	Progress on assembly (As applicable)
	iv)	Progress on internal stage inspection
	v)	Reason for any delay in total program
	vi)	Details of test failures if any in manufacturing stages
	vii)	Progress on final box up
	viii)	Constraints / Forward path
10.0.0	**Deviations**	
	i)	Deviations from this Specification are only acceptable where the Seller has listed in his quotation the requirements he can't or does not wish to comply with and the buyer has accepted in writing the deviations before the order is placed.
	ii)	In the absence of a list of deviations, it will be assumed by the Buyer that the Seller complies fully with this specification.

Annexure – A

1.0 Scope

Sr. No.	Description	Requirement / Rating
1.0.0	**Scope**	
1.1.0	Main Equipment	Design, manufacture, assembly & testing at manufacturer's works before dispatch, packing & delivery of Lightning Arresters rated up to 66 kV.
1.2.0	Accessories	
	i)	Supporting insulators for LA.
	ii)	Line terminal connectors.
	iii)	Surge counter with leakage current ammeter.
	iv)	Grounding terminal bracket
	v)	Necessary flanges alongwith all stainless steel hardware like nut bolts/ washers etc. for mounting of LA & surge Counter
	vi)	Suitably sized Cu flat or insulated copper cable for connection between LA and surge counter
	vii)	Any other item necessary or usual for efficient performance and satisfactory maintenance under the various operating and atmospheric conditions
1.3.0	Documentation	Submission of all drawings & documents pertaining to the equipment.
1.4.0	Site Supervision	Supervision of testing & commissioning of equipment at site.
1.5.0	Bill of Materials	Complete bill of materials shall be submitted in the following format.

Sr. No.	Purchaser Equipment Tag No. / Sap Code	Equipment Description	Location / Substation Name	Unit	Quantity
			e.g. Santacruz	Nos.	e.g. 1
			e.g. Alaknanda	Nos.	e.g. 6

2.0.0 Document Submission

Submission of drawings, calculations, catalogues, manuals, test reports shall be as follows :

Item Description	Along with offer	For Approval after award of contract	Final after approval	Remarks
Drawings	3 copies (Typical drgs)	4 copies + 1 Soft Copy	6 copies + 1 soft copy in CD	See Clause 5.0.0 for various drawings required
Calculations	3 copies (Typical)	4 copies + 1 Soft Copy	6 copies + 1 soft copy in CD	See Clause 5.0.0 for details
Catalogues	1 copy		6 copies + 1 soft copy in CD	
Instruction manual	1 copy		6 copies + 1 soft copy in CD	
Test Report	2 copies		6 copies + 1 soft copy in CD	Type test and routine test reports

3.0.0 Delivery Schedule

Sr. No.	Description	Requirement / Rating
i)	Delivery period start date	From date of purchase order
ii)	Delivery period end date	As agreed with supplier
iii)	Material dispatch clearance	After inspection by purchaser

Annexure – B

Ambient Conditions :

A) Mumbai

a)	Average grade atmosphere	Heavily polluted , salt Laden, dusty, humid with possibility of condensation
b)	Maximum altitude above sea level	1000 M
c)	Ambient Air temperature	Highest 45 deg C, Average 35 deg C
d)	Minimum ambient air temperature	20 deg C
e)	Relative Humidity	100 % Max
f)	Thermal Resistivity of Soil	150 Deg. C cm/W
g)	Seismic Zone	3
h)	Rainfall	3000 mm concentrated in four months

B) Delhi

a)	Average grade atmosphere	Heavily polluted, dry
b)	Maximum altitude above sea level	1000 M
c)	Ambient Air temperature	Highest 50 deg C, Average 40 deg C
d)	Minimum ambient air temperature	0 Deg C
e)	Relative Humidity	100 % Max
f)	Thermal Resistivity of Soil	150 Deg. C cm/W
g)	Seismic Zone	4
h)	Rainfall	750 mm concentrated in four months

Annexure – C1

Guaranteed Tech. Particulars for 66KV Lightning Arrester

Sr. No.	Description	Data By Purchaser	Data by Supplier
1	Name of manufacturer		
2	Type	Gapless, ZnO type, single pole, heavy duty, station class, pedestal mounted	
3	Model		
4	No. of units.		
5	Installation	Outdoor	
6	Application	Protection of Transformers, circuit breakers, lines and other outdoor S/S equipment.	
7	LA connection to system	Phase to earth	
8	Type of Conductor	ACSR Zebra / Goat	
9	Construction	Single Phase	
10	Rated voltage of arrester (KVrms)	60 KV	
11	Nominal discharge current (Amps) (8x20 micro sec. wave) peak value	10KA	
12	System Particulars		
i)	Highest System Voltage	72.5 KV	
ii)	Frequency	50HZ ± 5%	
iii)	System neutral	Solidly earthed	
iv)	Max. value of temporary over voltage & its max. duration		
	- Insulation level of equipment to be protected	325 KVp	
	- System short circuit level	31.5KA for 3 seconds.	
13	Maximum continuous operating voltage (MCOV)	52KV	
14	Impulse withstand current	100KAp	
15	Long Duration discharge class	3	
16	Minimum single impulse energy capability		
17	Maximum residual voltage at switching impulse current of 1KAp (30/60 micro sec. wave)	136 KVp	

Sr. No.	Description	Data By Purchaser	Data by Supplier
18	Max. residual voltage (1x20 micro sec. wave)		
i)	At 05 KAp		
ii)	At 10 KAp		
iii)	At 20 KAp		
19	Minimum creepage distance	31 mm/KV	
20	Pressure relief class	40KA	
21	Reference current (mA)		
22	Leakage current at COV (mA)		
	Resistive		
	Capacitive		
23	Dry and wet power frequency withstand voltage of arrester insulation (KVrms)		
24	Virtual steepness for front of wave for above (KV/micro sec.)		
25	Ratio of system voltage withstand level to protection level of surge arrester		
26	High current impulse withstand 4/10 micro second peak value (KV)		
27	Long duration current Impulse		
i)	Current peak.		
ii)	Virtual duration.		
28	Temporary Over Voltage Capacity (KVp)		
i)	At 0.1 Sec.		
ii)	At 1.0 Sec.		
iii)	At 10.0 Sec.		
iv)	At 100.0 Sec.		
29	Weight of complete unit (Kg)		
30	Height of complete unit from base to the line side (mm)		
31	Minimum recommended spacing between arresters Centro to Centro (mm)		
32	Clearance required from ground equipment at various heights of arresters unit (mm)		

Sr. No.	Description	Data By Purchaser	Data by Supplier
33	Earthing arrangement provided for earthing side of arresters.		
34	Mounting flanges dimensional details.		
35	Type and range of milli-ampere meter.		
36	Type and specifications of the surge connecters.		
37	Surge counter min. current for recording a lightning stroke	200 Amp	
38	Surge counter max. disch. Current withstand	100KA peak for 4/10 wave shape.	
39	Range of continuous leakage current at rated voltage with variation due to change in temperature & frequency		
40	Size and length of flexible Cu cable for connection between LA & surge counter		
41	Voltage time curve for thermal stability of LA after a stroke	To be provided	
42	Paint shade of surge counter housing	Polyurethane, 692 of IS-5	

Annexure – C2

Guaranteed Tech. Particulars for 33KV Lightning Arrester

Sr. No.	Description	Data By Purchaser	Data by Supplier
1	Name of manufacturer		
2	Type	Gapless, ZnO type, single pole, heavy duty, station class, pedestal mounted	
3	Model		
4	No. of units.		
5	Installation	Outdoor	
6	Application	Protection of Transformers, circuit breakers, lines and other outdoor S/S equipment.	
7	LA connection to system	Phase to earth	
8	Type of Conductor	ACSR Zebra / Goat	
9	Construction	Single Phase	
10	Rated voltage of arrester (KVrms)	30 KV	
11	Nominal discharge current (Amps) (8x20 micro sec. wave) peak value	10KA	
12	System Particulars		
i)	Highest System Voltage	36 KV	
ii)	Frequency	50HZ ± 5%	
iii)	System neutral	Solidly earthed	
iv)	Max. value of temporary over voltage & its max. duration		
	- Insulation level of equipment to be protected	170 KVp	
	- System short circuit level	26.3KA for 3 seconds.	
13	Maximum continuous operating voltage (MCOV)	25KV	
14	Impulse withstand current	100KAp	
15	Long Duration discharge class	3	
16	Minimum single impulse energy capability		
17	Maximum residual voltage at switching impulse current of 1KAp (30/60 micro sec. wave)	70 KVp	

Sr. No.	Description	Data By Purchaser	Data by Supplier
18	Max. residual voltage (1x20 micro sec. wave)		
i)	At 05 KAp		
ii)	At 10 KAp		
iii)	At 20 KAp		
19	Minimum creepage distance	31 mm/KV	
20	Pressure relief class	40KA	
21	Reference current (mA)		
22	Leakage current at COV (mA)		
	Resistive		
	Capacitive		
23	Dry and wet power frequency withstand voltage of arrester insulation (KVrms)		
24	Virtual steepness for front of wave for above (KV/micro sec.)		
25	Ratio of system voltage withstand level to protection level of surge arrester		
26	High current impulse withstand 4/10 micro second peak value (KV)		
27	Long duration current Impulse		
i)	Current peak.		
ii)	Virtual duration.		
28	Temporary Over Voltage Capacity (KVp)		
i)	At 0.1 Sec.		
ii)	At 1.0 Sec.		
iii)	At 10.0 Sec.		
iv)	At 100.0 Sec.		
29	Weight of complete unit (Kg)		
30	Height of complete unit from base to the line side (mm)		
31	Minimum recommended spacing between arresters Centro to Centro (mm)		
32	Clearance required from ground equipment at various heights of arresters unit (mm)		

Sr. No.	Description	Data By Purchaser	Data by Supplier
33	Earthing arrangement provided for earthing side of arresters.		
34	Mounting flanges dimensional details.		
35	Type and range of milli-ampere meter.		
36	Type and specifications of the surge connecters.		
37	Surge counter min. current for recording a lightning stroke	200 Amp	
38	Surge counter max. disch. Current withstand	100KA peak for 4/10 wave shape.	
39	Range of continuous leakage current at rated voltage with variation due to change in temperature & frequency		
40	Size and length of flexible Cu cable for connection between LA & surge counter		
41	Voltage time curve for thermal stability of LA after a stroke	To be provided	
42	Paint shade of surge counter housing	Polyurethane, 692 of IS-5	

Annexure – D

Recommended spares (Data by supplier)

List of recommended spares shall be submitted as follows –

Sr. No.	Description of spare part	Unit	Quantity
1		Nos.	
2		Nos.	
3			
4			
5			
6			

BSES

Technical Specification of Various Types of Structural Steel Items

Specification no – BSES-TS-17-SSI-R0

Rev:		0
Date:		05 Apr 2022
Pages:		07
Prepared by	Jeena Borana	
	Vani Sood/ Pronab Bairagi	05/04/22 05/04/2022
Reviewed by	Srinivas Gopu	
	Amit Tomar	05/04/2022
Approved by	Gaurav Sharma	
	K. Sheshadri	05/04/22

INDEX

1.0 SCOPE OF SUPPLY 3
2.0 SERVICE CONDITION 3
3.0 CODES & STANDARDS 3
4.0 ELECTRICAL DATA 4
5.0 DESIGN PARAMETERS 4
6.0 MATERIAL 5
7.0 TESTING & INSPECTION 5
8.0 MARKING 6
9.0 DEVIATION 6
10.0 GUARANTEE CERTIFICATE 6
11.0 DOCUMENTS SUBMISSION 6

1.0 SCOPE OF SUPPLY

The specification covers design, manufacturing, testing of structural steel items at manufacturers works before dispatch. Packing, delivery of material and submission of documents/test reports to purchaser.

2.0 SERVICE CONDITION

Structural Steel items to be supplied against this specification shall be suitable for satisfactory continuous operation under outdoor environment. Following are the climatic condition:

S. No.	Parameters	Requirements
2.1	Peak ambient temp.	55°C
2.2	Min ambient temp. in shade	45°C
2.3	Max.average ambient temp in 24 hours period in shade	40°C
2.4	Min ambient temp.	(-)5°C
2.5	Max. temp. attainable by an object exposed to sun	70°C
2.6	Max. relative humidity	95%
2.7	Average number of thunder storm days per annum	40
2.8	Average number of rainy storm days per annum	120
2.9	Average annual rainfall	1250mm
2.10	No of months of tropical monsoon condition	4 months
2.11	Max. wind pressure	150kg/m2
2.12	Altitudes	Not exceeding 1000mtrs

3.0 CODES & STANDARDS

S. No.	Code	Description
3.1	2629.1985	Important guidelines for general for general hot-dip galvanizing of iron and steel
3.2	IS 2062	Hot Rolled Medium and High Tensile Structural Steel
3.3	IS 808	Dimension for Hot Rolled Steel Beam, Column, Channel and Angle Section
3.4	IS : 5561-1970	Specification for electric power connection

4.0 ELECTRICAL DATA

S.No.	Parameters	Details
4.1	LT Supply System	3 phase AC, 4 Wire
4.2	Rated Voltage	415+/-10%
4.3	Rated Frequency	50Hz ± 5%
4.4	Fault level	35MVA – 50kA

5.0 DESIGN PARAMETERS

S. No.	Description
5.1	MS Angle, Strctl,50mm , 50mm , 6mm
5.2	MS Angle, Strctl, 65mm , 65mm , 6mm
5.3	MS Angle, Strctl, 75mm , 75mm , 6mm
5.4	CHNL, Strctl, ISMC;150MM;75MM;16.8KG/M
5.5	CHNL, Strctl, ISMC100; 100MM; 50mm; 7.7mm
5.6	Flat, Strctl, 8mm;50mm;6000mm
5.7	Flat, Strctl, 6mm; 50mm;6000mm
5.8	Flat, Strctl, 6mm;50mm;5500mm

5.1 MS Angle (50MM:50MM:6MM): Dimension shall be A =50mm, B=50mm, C=6mm
5.2 MS Angle (65MM:65MM:6MM): Dimension shall be A =65mm, B=65mm, C=6mm
5.3 MS Angle (75MM:75MM:6MM): Dimension shall be A =75mm, B=75mm, C=6mm

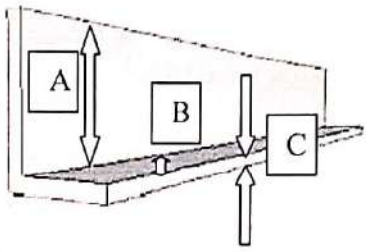

For MS Angle reference drawing (a, b & c)

5.4 Channel Structural (150MM;75MM;16.8KG/M): Dimension shall be 150MM;75MM;16.8KG/M
5.5 MS Channel (100MM;100MM;5MMX7.7MM): Dimension shall be D=100, B=100,t=5,T=7.7mm

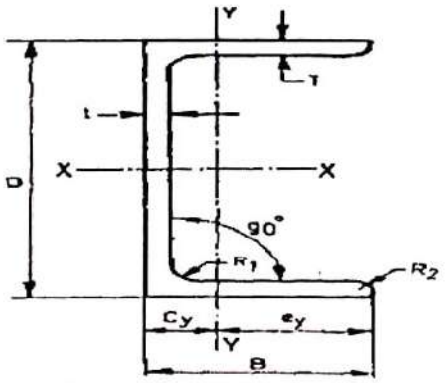

For MS Channel reference drawing (g & h)

5.6 Flat Structural (8MM;50MM;6000MM) : Dimension shall be 8MM;50MM;6000MM
5.7 Flat Structural (6MM;50MM;6000MM) : Dimension shall be 6MM;50MM;6000MM
5.8 Flat Structural (6MM;50MM;5500MM) : Dimension shall be 6MM;50MM;5500MM

6.0 MATERIAL

6.1	Material	Material shall be mild steel, grade 'A', Designation E-250 as per IS 2062.
6.2	Make	Steel shall be of TATA/SAIL/ESSAR/RINL/JSPL/JSW/VISA steel/Bhushan Steel/Other BSES approved make

7.0 TESTING & INSPECTION

All the tests shall be carried out in accordance with IEC / IS standards.

7.1	Visual Check	Material shall be visually checked and shall free from external defects.
7.2	Dimensional Check	The dimensional requirements shall be checked as per the drawing.

7.3	Acceptance Test	Following tests needs to be conducted by the vendor during inspection (value shall be followed as per relevant IS/IEC) a) Tensile Strength b) Yield Stress c) Elongation d) Chemical Composition as per IS 2062 from NABL accredited LAB. e) Incase of unavailability of inhouse testing facility, tests shall be conducted from NABL accredited LAB.

8.0 MARKING

8.1	The material shall be embossed with the details mentioned	a) Name/Model of the material b) Identification of the source of manufacture c) ISI mark

9.0 DEVIATION

Deviations from this Specification shall be stated in writing with the tender by reference to the Specification clause/GTP/Drawing and a description of the alternative offer. In absence of such a statement, requirements of the Specification shall be met without exception.

10.0 GUARANTEE CERTIFICATE

Guarantee Certificate to be given for any manufacturing defects along with its consignment from the date of receipts at stores for free replacement within one year.

11.0 DOCUMENTS SUBMISSION

Document submission shall be as per the matrix given below. All documents/drawing shall be provided in soft copy for each section. Language of the documents shall be English only. Deficient/improper drawing submission may liable for rejection.

S.No.	Detail of Document	For Tender	For Approval/Review	Final Submission
11.1	Deviation Sheet, if any	Required	Required	Required
11.2	GA and Dimensional	Required	Required	Required

S.No.	Detail of Document	For Tender	For Approval/Review	Final Submission
	Drawing			
11.3	Manufacturer's quality assurance plan and certification for quality standards		Required	Required
11.4	Make of Raw Materials	Required	Required	Required
11.5	Inspection and test reports, carried out in manufacturer's works			Required
11.6	Routine Test Certificates			Required
11.7	Test certificates of all the raw materials			Required

BSES

TECHNICAL SPECIFICATION

OF

GI STRIP

Specification No- GN101-03-SP-150-00

BSES RAJDHANI POWER LTD			
Prepared by	Abhay Gupta		Rev : 00
	Pronab Bairagi		
Reviewed by	Amit Tomar		Date : 5-Nov-18
Approved by	K. Sheshadri		Page : 1 of 13
Registered Office: BSES Bhawan, Nehru Place, Delhi - 110019			

BSES Rajdhani Power Ltd	GN101-03-SP-150-00

TECHNICAL SPECIFICATION OF GI STRIP

TABLE OF CONTENTS

REVISION RECORD 3

1.0 SCOPE 4

2.0 STANDARDS 4

3.0 CLIMATIC CONDITIONS 5

4.0 GENERAL TECHNICAL REQUIREMENT 5

4.1 GENERAL REQUIREMENTS 5

4.2 PHYSICAL AND CHEMICAL PROPERTIES 6

4.3 METHODS OF GALVANIZING 7

4.4 MARKING 8

4.5 DIMENSIONS TOLERANCE 8

5.0 TESTING 8

6.0 INSPECTION 10

7.0 STORING, PACKING AND HANDLING 10

8.0 DOCUMENTATION 11

8.1DRAWING, DATA AND MANUALS 11

8.2 DOCUMENTS TO BE SUBMITTED ALONG WITHBID FOR TECHNICAL JUSTIFICATION 11

8.3 WARRANTY 12

9.0 DEVIATIONS 13

TECHNICAL SPECIFICATION OF GI STRIP

REVISION RECORD

Rev. No.	Revision Date	Item/ clause no:	Page No.	Nature of Change	Approved by

TECHNICAL SPECIFICATION OF GI STRIP

1.0 SCOPE

This specification covers design, manufacture, testing, inspection and supply of GI strip for earthing (50X6mm and 25X6mm) (Heavy duty) for satisfactory operations in Sub-station / Project site at different locations under BSES Rajdhani Power Ltd, New Delhi.

2.0 STANDARDS

Material shall confirm to the latest applicable Indian standards (IS) which shall mean latest revisions, with amendments/changes adopted and published, unless specifically stated otherwise in the Specification.

S. No.	International/ Indian Standard	Title
1	IS:2629 (1966)	Recommended practice for hot dip galvanized iron Earthing strips
2	IS:2633 (1986)	Methods of testing uniformity of coating on Zinc coated articles
3	IS:5358 (1969)	Specification for hot dip galvanized coating on fasteners
4	IS:3203	Specification for electroplating
5	IS:4759 (1968)	Specification for hot dip Zinc coating on structural & other allied products
6	IS:2062 Grade 'A' quality	Specification for MS channel and MS flat
7	IS:2062	Chemical and physical composition material
8	IS:1852	Rolling and cutting tolerances for Hot rolled steel products
9	IS:6745	Specification for methods for the determination of the mass of Zn coated Iron and steel articles

TECHNICAL SPECIFICATION OF GI STRIP

3.0 CLIMATIC CONDITIONS

a)	Average grade atmospheric condition	Heavily polluted, dry
b)	Maximum altitude above sea level	1000 M
c)	Air temperature Ambient	i) Highest : 50°C ii) Average : 30°C iii) Minimum : 0°C
e)	Relative Humidity	100 % max
f)	Thermal Resistivity of Soil	150°C. cm / W (max.)
g)	Seismic Zone	4
h)	Rainfall	750 mm concentrated in four months

4.0 GENERAL TECHNICAL REQUIREMENT

4.1 GENERAL REQUIREMENTS

- The specification is for the sizes 50X6 mm and 25X6 mm GI Strip
- Fully galvanized iron strips shall be used in switchyard. Galvanized Iron strips shall confirm to IS: 2629 (1966). The Zinc deposition should not be more than 610 g / m^2 of the galvanized surface area of the MS strip.
- All galvanized materials shall withstand test as per IS: 2633 (1972). The weight of zinc coating shall be determined as per the method stipulated in IS: 2633(1964).
- The standard length of Galvanized Iron Earthing Strip shall be minimum 7 Meters and not exceeding 10 Meters.

- Uniform Zinc coating is required.

4.2 PHYSICAL AND CHEMICAL PROPERTIES

Physical-

The GI flat shall be supplied in 7m to 10m lengths.

The weight of GI flat shall be witnessed by BRPL at the time of taking delivery. The weight recorded in the material receipt certificate issued by BRPL shall be final.

Mechanical Properties (minimum requirement)		
1	Tensile strength (kgf/mm2)	410 kgf/mm^2
2	Yield stress (min.) for thickness <20mm	26 kgf/mm^2 or 250 N/mm^2
3	Elongation (%)	23%
4	Bend test	Minimum 3 times the thickness of material
5	Zinc coat thickness	70 microns

Chemical-

Chemical Properties		
S.No	**Element**	**%**
1	Iron	98.32
2	Carbon	0.204
3	Silicon	0.158
4	Manganese	0.510
5	Sulphur	0.028

TECHNICAL SPECIFICATION OF GI STRIP

Chemical Properties		
S.No	**Element**	**%**
6	Phosphorous	0.0320
7	Nickel	0.040
8	Chromium	0.086
9	Molybdenum	<0.01
10	Aluminium	<0.01
11	Copper	<0.104
12	Titanium	<0.005
13	Niobium	<0.01
14	Cobalt	<0.01
15	Boron	<0.0005
16	Lead	<0.01
17	Vanadium	<0.01
18	Zirconium	<0.006

4.3 METHODS OF GALVANIZING

S.No	Tests	For GI Flat
1	Dip test	4 dips of 1 min each
2	Mass of Zinc coating	610 g/m^2 (minimum)

- Pre dispatch inspection shall be performed to witness following tests:
  - Freedom from defects
  - Verification of dimensions
  - Galvanization tests
  - Mechanical tests
  - Chemical composition tests
- These tests are to be performed and certified at NABL accredited third party laboratory.
- MS Flat shall conform to IS 2062 and its latest amendments for steel and galvanization as per IS 4759 and its latest amendments.
- The flat shall be coated with Zn 98- Zinc grade
- The minimum Zn coating shall be 610 g/m^2 for thickness more than 5mm

4.4 MARKING

The bidder shall put his identification marks on the finished materials along with ISI mark, Manufacturer's name, PO No. and BRPL name. This mark shall be in "legible English letters".

4.5 DIMENSIONS TOLERANCE

Width = ±2.5%

Thickness = ±0.5%

5.0 TESTING

Type Test

Product shall be type tested from NABL accredited lab and same shall be submitted to BRPL. Type test report should not be older than 5 years old. Vendor shall conduct the type test (as per the relevant IS (Refer Clause 2.0 of this technical specification)) from BRPL sample from NABL accredited lab if type test report is older than 5 years without any cost implications to BRPL. Following type tests shall be conducted mandatorily-

i. Uniformity in thickness
ii. Mass of Zn coating
iii. Adhesion test
iv. Knife test for Zn coated hardware and assembled Steel products
v. Bend and wrapping test

vi. Tensile test

vii. Chemical composition test

viii. Freedom from defects

BRPL reserve the right to seal the sample once per PO for type testing from NABL accredited lab if required. Bidder has to conduct the type test on BRPL requirement. Expenses for type testing shall be borne by bidder.

Acceptance test

i. **Freedom from defects**

The Zinc coating shall be adherent, smooth, reasonably bright, continuous and free from imperfections as flux, ash and dross inclusions, bare and black spots, lumpiness and runs, rust stuns, bulky white deposits and blisters.

ii. **Uniformity in thickness**

Galvanized articles shall be tested for uniformity in thickness of coating in accordance with Preece test given in IS 2633- 1986.

iii. **Mass of Zn Coating**

Mass of Zinc coating shall be determined in accordance with IS 6745- 1972.

iv. **Adhesion test**

The adherence of the Zinc coat on steel shall be determined by the pivoted hammer test. The hammer shall be made of normalized 0.3 – 0.4 percent carbon steel (Shall be in accordance with IS: 2629 – 1985).

v. **Knife test for Zn coated hardware and assembled Steel products**

When the coating is cut or pried into, such as with a stout knife applied with considerable pressure in a manner tending to remove a portion of the coating, it shall only be possible to remove small particles of the coating and it shall not be possible to peel any portion of the coating so as to expose the underlying iron or steel (Shall be in accordance with IS: 2629 – 1985).

vi. Bend and wrapping test

vii. Tensile test

viii. Chemical composition test

6.0 INSPECTION

- The representative of Purchaser shall pick up samples at random from the GI strips offered for carrying out routine tests as per specified IS.
- The materials to be supplied will be subject to inspection and approval by BRPL's representative before dispatch and / or on arrival at the destination.
- Inspection before dispatch shall not relieve the bidder of their responsibility to supply the steel section strictly in accordance with the specification.
- The bidders shall abide by all the statutory provisions, acts such as the Indian Electricity Act, Indian factory Act, Indian Boiler Act etc. and corresponding rules and regulations as may be applicable and as amended from time to time.
- BRPLs representative shall be entitled at all reasonable time during manufacturing to inspect, examine and test at the bidders premises the materials and workmanship of the steel section to be supplied.
- As soon as the steel section is ready for testing, the bidder shall intimate BRPL well in advance.
- The material shall not be dispatched unless waiver of inspection is obtained or inspected by BRPL's authorized representative.
- The test certificate shall be in accordance with the latest version of the relevant Indian Standard or any equivalent International standards.
- The acceptance of any batch /lot shall in no way relieve the bidder of any of his responsibilities for meeting all the requirements of the specification and shall not prevent subsequent rejection of any item if the same later found defective.
- The purchaser reserves the right to reject on inspection after the same is received at destination.

7.0 STORING, PACKING AND HANDLING

Sufficient care shall be exercised while storing, packing and handling of galvanized products. While storing and transporting them, adequate ventilation shall be provided as otherwise 'rust' or 'wet storage stain' may result when galvanized coatings reacts with humidity and atmospheric gases. Galvanized articles can also be stored with spacers in between them, they shall also be kept at an inclination to facilitate drainage of water if collected on the articles. Post treatment like chromating shall be provided to minimize the chances of formation of white rust.

8.0 DOCUMENTATION

Submission of drawings, calculations, catalogues, manuals, test reports shall be as mentioned below:

8.1DRAWING, DATA AND MANUALS

Cross-Sectional drawing shall show every feature of construction. This drawing shall also state the text to be printed over the GI Strip, font sizes to be used, additional text if any etc.

8.2 DOCUMENTS TO BE SUBMITTED ALONG WITHBID FOR TECHNICAL JUSTIFICATION

The vendor shall submit-

- Cross sectional drawing
- GTP (all data to appear)
- Type test certificates

Document Submission

Submission of drawings, calculations, catalogues, manuals, test reports shall be as follows.

Legend:

GTP : Guaranteed Technical Particulars

TTR : Type Test Report

RTR : Routine Test Report

	Documents Along with offer	After award of contract- for Approval	Final documents(after Approval)
GTP	1 copies	** 1 soft copy	** 1 soft copy + CD
Drawings	1 copies	** 1 soft copy	** 1 soft copy + CD
Calculations	1copies	** 1 soft copy	** 1 soft copy + CD
Catalogues & Manual	1 copy each		** 1 soft copy + CD
Test Report	1 copy each of TTR and sample RTR		** 1 soft copy + CD

** Soft copy and CD shall contain documents duly approved, signed and scanned

- The manufacturing of the GI Strip shall be strictly in accordance with the approved drawings and no deviation shall be permitted without the written approval of the BRPL. All manufacturing and fabrication work in connection with the GI Strip prior to the approval of the drawing shall be at manufacturer's risk.
- Approval of drawing etc. by the BRPL shall not relieve the Manufacturer of his responsibility and liability for ensuring correctness and correct interpretation of the latest revision of applicable standards, rules and codes of practices. The GI Strip shall conform in all respects to high standards of engineering, design, workmanship and latest revisions of relevant standards at the time of ordering and BRPL shall have the power to reject any work or material which in his judgment is not in full accordance therewith.

8.3 WARRANTY

Warranty shall be 5 years minimum. All the relevant documents shall be submitted by the bidder in support to warranty terms and conditions.

9.0 DEVIATIONS

a) Deviations from this specification shall be listed separately by bidder clause wise (format given below) along with optional offer and has to submit the list along with bid/quotation. BRPL will review the deviations and if BRPL is agreed with the deviation, seller has to take written confirmation from BRPL on deviation during tender evaluation.

a) In the absence of any separate list of deviations from the bidders with bid as well as written confirmation from BRPL on deviations, it will be assumed by the Buyer that the Seller complies with the Specification fully.

b) Any deviations mentioned in any other submitted bid documents (i.e.in filled GTP, Catalog, BRPL old approval, buyer's/seller's standards etc) by seller without separate deviation sheets will not consider as a deviation from this tech spec at any stage of contract.

Deviation Sheet Format-

S.No	Document Name	Clause No.	Deviation	Reason	Merits to BRPL

BSES

48F Composite Fiber Multitube (MDPE) Single Sheath Duct Lite Optical Fiber Cable

PRODUCT INFORMATION

Fiber		
Single Mode Optical Fiber	**36 Nos.**	
Maximum Cabled Fiber Attenuation dB/Km		1310nm : 0.36 & 1550nm : 0.23 & 1625nm : 0.26
Multi Mode Optical Fiber	**12 Nos.**	**Fiber OM2 : 50/125**
Maximum Cabled Fiber Attenuation dB/Km		8500nm : 3.5 & 1300nm : 1.5
Loose Tube		
Filling Gel		Thixotropic gel to prevent water ingress in loose tube (ITCO T 250)
Fiber Per Tube	12 Nos.	
Tube	4 Nos.	Thermoplastic Material (PBT)
Core		
Central Strength Member		Fibre Reinforced Plastic (FRP) to provide tensile strength and antibuckling properties.
Filler	2 Nos.	Polyethylene Black
Water blocking elements		Cable flooding gel is added in interstices of core to prevent water ingress in the cable core (ITCO C 480)
Core Covering		Binder and Polyester Tape
Cable		
Rip Cord	2 Nos.	Polyester Based Twisted Yarn — Applied below Outer Sheath
Outer Sheathing		UV Proof Black MDPE (ME 6052/ME 6056) — 2.2 mm Nominal Thickness

CONSTRUCTIONAL DETAILS

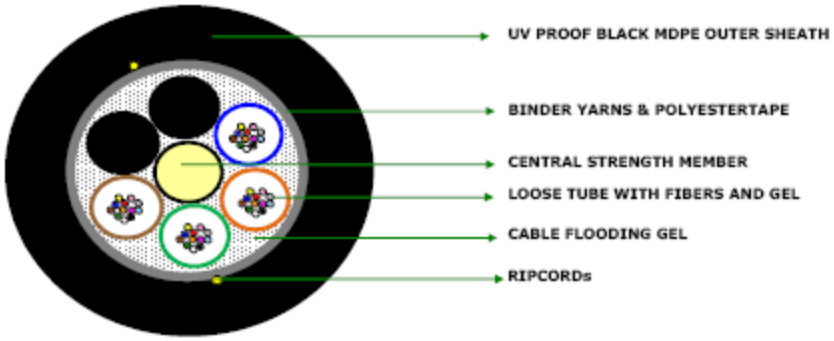

Typical construction Diagram - Not to Scale

OPTICAL FIBER CABLE PERFORMANCE

MECHANICAL				ENVIRONMENTAL	
Max. Tensile strength	2500 N	**Crush Resistance**	2000 N / 100x100 mm	**Temp. Performance**	
Minimum Bend Radius	20 D	**Impact strength**	25 Nm.	**Installation**	-20°C to +80°C
Repeated Bending Test	20 D,30Cycle	**Torsion**	±180°	**Service**	-20°C to +80°C
				Storage	-20°C to +80°C
Water Penetration	1m head, 3m samples, 24 Hr			**Drip Test**	30 cm, 70°C, 24 hr

Tests shall be carried out as per IEC 60793 & IEC 60794-1-2/GR 20 Standards. Change in attenuations shall be ≤ 0.05 dB.

COLOR DETAILS

Optical Fibre Colour	Blue, Orange, Green, Brown, Slate, White, Red, Black, Yellow, Violet, Pink, Aqua.
Loose Tube Colour	For G657A1 : Blue, Orange, Green & For OM2 : Brown.
Outer Sheath Colour	Black

PHYSICAL PARAMETERS

Cable Diameter (mm)	11.75 ± 0.25	**Cable Wt. (Kg/Km)**	114 ± 10%	**Cable Length:**	2 Km ± 5%

PRINTING DETAILS

Cable Printing details (White - Hot Foil Emb.)	MONTH & YEAR OF MANUFACTURE LENGTH CODE METER MARKING

The accuracy of marking shall be ± 0.5%. Occasional loss of printing & remarking shall be as per Bell core CR 20 and this supercedes the earlier markings.