BSES RAJDHANI POWER LIMITED

Tender Notification for

Survey, Design, Supply, Erection, Installation, Testing, Commissioning, Handing over of 33/11kV Kasturba Nagar AIS Grid Substation

NIT NO CMC/BR/25-26/FK/PR/KG/1271
DT 18.04.2025

Due Date for Submission: 08/05/2025 1530HRS

BSES RAJDHANI POWER LTD (BRPL)
Corporate Identification Number: **U74899DL2001PLC111527**
Telephone Number: +91 11 3009 9999
Fax Number: **+**91 11 2641 9833
Website: **www.bsesdelhi.com**

Table of Contents

Section No.	Description
Section-I	Request for Quotation
Section-II	Instruction to Bidders
Section-III	Special Terms & Condition of Contracts
Section-IV	General Terms and Condition –Supply
Section-V	Price format- Supply
Section-VI	General Terms and Condition –Erection, Testing & Commissioning
Section-VII	Price format- Erection, Testing & Commissioning
Section-VIII	General Terms and Condition –Civil
Section-IX	Price format- Civil
Section-X	Grand Summary of the Quoted Price
Section-XI	Vendor Code of Conduct
Annexure-I	Technical Specifications

SECTION – I: REQUEST FOR QUOTATION

1.00 **Event Information**

BRPL invites sealed tenders in 2 envelopes for following scope of work

Sl. No.	Description	Estimated Cost (Rs.)	Qty.	Delivery & Installation at
1	Survey, Design, Supply, Erection, Installation, Testing, Commissioning, Handing over of 33/11kV Kasturba Nagar AIS Grid Substation.	29 Crores	As per BOQ Attached	Delhi, Sites.

The bidder must qualify the requirements as specified in clause 2.0 stated below.

All envelopes shall be duly super scribed "Survey, Design, Supply, Erection, Installation, Testing, Commissioning, Handing over of 33/11kV Kasturba Nagar AIS Grid Substation, New Delhi. NIT NO CMC/BR/25-26/FK/PR/KG/1271"

1.01 The schedule of specifications with detail terms & conditions can be obtained from address given below against submission of non-refundable demand draft of **Rs.1180/-** drawn in favour of BSES Rajdhani Power Ltd, payable at Delhi. The tender documents & detail terms and conditions can also be downloaded from the website **"www.bsesdelhi.com --> Tenders --> BSES Rajdhani Power Ltd --> Open Tenders"**.
In case tender papers are downloaded from the above website, then the bidder has to enclose a demand draft covering the cost of bid documents.

1.02 Bids will be received up to 08/05/2025 1530 HRS at the address given at 3.01 below. Part A of the Bid shall be opened on 08/05/2025 1600 HRS.

Part B of the Bid will be opened in case of Techno-Commercially qualified Bidders and the date of opening of same shall be intimated in due course. It is the sole responsibility of the bidder to ensure that the bid documents reach this office on or before the last date.

1.03 BSES Rajdhani Power Ltd reserves the right to accept/reject any or all Tenders without assigning any reason thereof in the event of following

(i) **Earnest Money Deposit (EMD)** of value **Rs 29,00,000/-** as per Table no.1 is not deposited in shape of FD/Bank Guarantee drawn in favour of BSES Rajdhani Power Ltd, payable at Delhi.
(ii) The offer does not contain prices indicating break-up towards all taxes & duties in prescribed format
(iii) Complete Technical details are not enclosed.
(iv) Tender is received after due date and time**.**
(iv) Technical offer contains any prices
(v) Prices are **not FIRM** and subject to Price Variation

2.0 **Qualification Criteria:-**

Technical

The prospective bidder must qualify all of the following requirements to participate in the bidding process and bidder who meets following requirements will be considered as successful bidder and BRPL has a right to disqualify those bidders who do not meet these requirements.

a. The bidder must have designed, supplied, installed and commissioned Grid substations of 66 kV or higher rating including civil works on turnkey basis in Five (5) years from date of Bid opening. The list of such installations shall be furnished as per format attached in Schedule-I (List of Installations) of Technical Specification.

b. Bidder shall procure major equipment from the approved vendor list of BRPL as per technical specifications.

c. The bidder should have qualified technical & dedicated QA personnel at various stages of manufacture & testing. Documentary evidence in support of QR to be provided.

d. Bidder shall submit the performance certificates for 1 year satisfactory performance from 2 reputed companies for executed jobs.

e. The bidder must furnish valid Type Test Certificate carried out at CPRI/ERDA for all major equipment. The Test certificate should not be more than five years old. In case type test reports are older than five (5) years from the date of bid opening, bidder shall submit the undertaking that– "since the last type test, the product has not undergone any change in design and the material used and the dimensions of the product are the same as the one on which the type test was conducted".
Non submission of type test reports will lead to rejection of the offer. In any case, Type test report older than ten (10) years shall not be acceptable and bid is liable for rejection.

f. The bidder should have established field quality assurance system & safety organization designed to achieve high level of reliability at various stage of field services required for successful erection, testing, & commissioning. Documentary evidence in support of QR to be provided.

Financial:

a. Bidder must have average annual turnover of three times of estimated cost during last Three (03) financial years i.e. FY 21-22, 22-23 and 23-24, duly certified CA certificate to be submitted. Balance Sheet of 03 financial years also to be provided.

b. The bidder shall submit a "NO LITIGATION" certificate as per attached format.

c. The Bidder should possess valid Electrical contractor license issued by competent statutory agency to undertake work in Delhi/NCR. In case bidder is not having this license, Bidder has to give the undertaking that it will be obtained by them before the start of the work at site where copy of valid license shall be submitted to BRPL before the award of the PO.

d. The bidder must possess valid ISO 9001:2000 certification

e. An undertaking (self-certificate) that the bidder has not been blacklisted/debarred by any central/ state government institution including electricity boards.

f. The bidder must have valid PAN No., GST No., in addition to other statuary compliances. The bidder must submit the copy of registrations and submit an undertaking that the bidder shall comply with all the statutory compliances as per the applicable laws/rules etc. before the start of the work.

Note: All reference dates shall be taken as the date of technical bid opening

Notwithstanding anything stated above, BRPL reserves the right to assess bidder's capability to perform the contract, assess the capability and installed capacity of the Bidder for carrying out the supplies, should the circumstances warrant such assessment in the overall interest of the purchaser. BRPL also reserves the right to evaluate the bidder based on performance of past supplies/projects executed in BRPL. In this regard the decision of the purchaser is final.

3.00 Bidding and Award Process

Bidders are requested to submit their offer strictly in line with this tender document. **NO DEVIATION IS ACCEPTABLE**. BRPL shall response to the clarifications raised by various bidders and the will be distributed to all participating bidders through website.

3.01 BID SUBMISSION

The bidders are required to submit the bids in Two (02) parts to the following address:

Head of Department
Contracts & Material Department
BSES Rajdhani Power Ltd
1st Floor, C Block
BSES Bhawan, Nehru Place
New Delhi 110019

PART A: TECHNICAL **BID** comprising of following (1 original + 1 copy)

- EMD in prescribed format
- Non-refundable demand draft for Rs 1180/- in case the forms are downloaded from website
- Documentary evidence in support of qualifying criteria
- Technical Details / Filled in GTP/Type test report etc
- Qualified Manpower available & Organization Chart
- Testing Facilities
- Copies of Orders, Execution /Performance Certificate & Other Documents to support the QC as per clause 2.0
- Original Tender documents duly stamped & signed on each page as token of acceptance
- Acceptance to Commercial Terms and Conditions viz Delivery schedule/period, Payment terms, PBG etc

PART B: FINANCIAL **BID** comprising of (1 original only)

- Price strictly in the Format enclosed indicating Break up of basic price, taxes & duties, transportation etc

3.02 TIME SCHEDULE

The bidders should complete the following within the dates specified as under:

S. No.	Steps	Date
1	Date of sale of bid documents	18.04.2025
2	Pre-Bid meeting	28.04.2025 1430 HRS
3	Last date of Queries, if any	30.04.2025
4	Last date of receipt of bid documents	08.05.2025 1530HRS
5	Date & time of opening of tender – Part A	08.05.2025 1600HRS

This is a two part bid process. Bidders are to submit the bids in 2(two) parts

Both these parts should be furnished in separate sealed covers super scribing NIT no. DUE DATE OF SUBMISSION, with particulars as **PART-A TECHNICAL BID & COMMERCIAL TERMS & CONDITIONS** and **Part-B FINANCIAL BID** and these sealed envelopes should again be placed in another sealed cover which shall be submitted before the due date & time specified.

Part – A: Technical Bid should not contain any cost information whatsoever and shall be submitted within the due date.

PART B: This envelope will be opened after techno-commercial evaluation and only of the qualified bidders.

REVERSE AUCTION: Purchaser reserves the right to use **REVERSE AUCTION** through SAP-SRM as an optional tool as an integral part of the entire tendering process. All techno-commercially qualified bidders shall participate in this event

Notwithstanding anything stated above, the Purchaser reserves the right to assess bidder's capability to perform the contract, should the circumstances warrant such assessment in the overall interest of the purchaser. In this regard the decision of the purchaser is final.

In case RA is not concluded/conducted for any reasons, a "final no regret" financial bid in a sealed envelope will be called for from all qualified bidders

BIDS RECEIVED AFTER DUE DATE AND TIME SHALL BE LIABLE TO REJECTION

4.00 Award Decision

4.01 Purchaser intends to award the business on a lowest bid basis, so suppliers are encouraged to submit the bid competitively. The decision to place purchase order/ LOI solely depends on purchaser on the cost competitiveness across multiple lots, quality, delivery and bidder's capacity, in addition to other factors that Purchaser may deem relevant.

4.02 In the event of your bid being selected by purchaser (and / or its affiliates) and you subsequent DEFAULT on your bid; you will be required to pay purchaser (and / or its affiliates) an amount equal to the difference in your bid and the next lowest bid on the quantity declared in NIT/RFQ.

4.03 In case any supplier is found unsatisfactory during the delivery process, the award will be cancelled and BRPL reserves the right to award other suppliers who are found fit.

4.04 Qty Variation: The purchaser reserves the rights to vary the quantity by (+/-) 30% of the tender quantity.

5.00 Market Integrity

We have a fair and competitive marketplace. The rules for bidders are outlined in the Terms & Conditions.

Bidders must agree to these rules prior to participating. In addition to other remedies available, we reserves the right to exclude a bidder from participating in future markets due to the bidder's violation of any of the rules or obligations contained in the Terms & Condition. A bidder who violates the marketplace rules or engages in behaviour that disrupts the fair execution of the marketplace shall be restricted from bidding for a length of time, depending upon the seriousness of the violation. Examples of violations include, but are not limited to:

- Failure to honour prices submitted to the marketplace.
- Breach of the terms of the published in Request for Quotation/ NIT.

6.00 Confidentiality

All information contained in this RFQ is confidential and shall not be disclosed, published or advertised in any manner without written authorization from BRPL. This includes all bidding information submitted.

All RFQ documents remain the property of BRPL and all bidders are required to return these documents to BRPL upon request.

Bidders who do not honour these confidentiality provisions will be excluded from participating in future bidding events.

7.00 Contact Information

Technical or Commercial clarifications, if any, as regards this RFQ shall be sought in writing and sent by post/courier to following address. The same shall not be communicated through email/phone

	Technical	**Commercial**
Contact Person	Mr. Abhinav Srivastava	Mr. Pankaj Goyal
Address	BSES Rajdhani Power Ltd , 1st Floor, A Block, BSES Bhawan, Nehru Place, New Delhi 110019.	BSES Rajdhani Power Ltd , 1st Floor, D Block, BSES Bhawan, Nehru Place, New Delhi 110019
Email	abhinav.r.srivastava@relianceada.com Sonia.mittal@relianceada.com	pankaj.goyal@relianceada.com kumar.ga.gaurav@relianceada.com faiyaz.hussain@relianceada.com

SECTION – II: INSTRUCTION TO BIDDERS

1.00 GENERAL

BSES Rajdhani Power Ltd, hereinafter referred to as "The Company " are desirous of awarding work for Survey, Design, Supply, Erection, Installation, Testing, Commissioning, Handing over of 33/11kV Kasturba Nagar AIS Grid Substation.

2.00 SCOPE OF WORK

The scope of the work is as per BOQ in the tender.

3.00 DISCLAIMER

This Document includes statements, which reflect various assumptions, which may or may not be correct .Each Bidder shall conduct its own estimation and analysis and should check the accuracy, reliability and completeness of the information in this Document and obtain independent advice from appropriate sources in their own interest.

Neither Purchaser nor its employees will have any liability whatsoever to any Bidder or any other person under the law or contract, the principles of restitution or unjust enrichment or otherwise for any loss, expense or damage whatsoever which may arise from or be incurred or suffered in connection with anything contained in this Document, any matter deemed to form part of this Document, provision of Services and any other information supplied by or on behalf of Purchaser or its employees, or otherwise a rising in any way from the selection process for the Supply.

Though adequate care has been taken while issuing the Bid document, the Bidder should satisfy itself that Documents are complete in all respects. Intimation of any discrepancy shall be given to this office immediately.

This Document and the information contained herein are Strictly Confidential and are for the use of only the person(s) to whom it is issued. It may not be copied or distributed by the recipient to third parties (other than in confidence to the recipient's professional advisors).

4.00 COST OF BIDDING

The Bidder shall bear all cost associated with the preparation and submission of its Bid and the company will be in no case be responsible or liable for those costs.

5.00 BIDDING DOCUMENTS

The Scope of Work, Bidding Procedures and Contract Terms are described in the Bidding Documents. In addition to the covering letter accompanying Bidding Documents, the Bidding Documents include:

Request for Quotation (RFQ) - Section - I

Instructions to Bidders (ITB) - Section - II
Special Terms & Conditions of Contract (SCC) - Section –III
General Terms and Condition Supply (GCC-Supply) - Section –IV
Price Format Supply- Section V
General Terms and Condition Erection, Testing & Commissioning (GCC-ETC) - Section –VI
Price Format Erection, Testing & Commissioning - Section VII
Grand Summary of the Quoted Price – Section VIII
Vendor Code of Conduct - Section IX
Scope Demarcation and Route Map – Annexure II
Technical Specifications - Annexure III

The Bidder is expected to examine the Bidding Documents, including all Instructions, Forms, Terms and Specifications. Failure to furnish all information required by the Bidding Documents or submission of a Bid not substantially responsive to the Bidding Documents in every respect will may result in the rejection of the Bid.

6.00 AMENDMENT OF BIDDING DOCUMENTS

At any time prior to the deadline for submission of Bids, the Company may for any reasons, whether at its own initiative or in response to a clarification requested by a prospective Bidder, modify the Bidding Documents by amendment.

The Amendment shall be part of the Bidding Documents, pursuant to Clause 5.00, and it will be notified in web site **www.bsesdelhi.com**, and will be binding on them.

In order to afford prospective Bidders reasonable time in which to take the Amendment into account in preparing their Bids, the Company may, at its discretion, extend the deadline for the submission of Bids. The same shall be published as a corrigendum in website **www.bsesdelhi.com.**

Purchaser shall reserve the rights to following:

- extend due date of submission
- modify tender document in part/whole
- cancel the entire tender

Bidders are requested to visit website regularly for any modification/ clarification/ corrigendum/ addendum of the bid documents

7.00 LANGUAGE OF BID

The Bid prepared by the Bidder and all correspondence and documents relating to the Bid exchanged by the Bidder and the Purchaser shall be written in the English Language. Any printed literature furnished by the Bidder may be written in another Language, provided that this literature is accompanied by English translation, in which case, for purposes of interpretation of the Bid, the English translation shall govern.

8.00 DOCUMENTS COMPRISING THE BID

The Bid prepared and submitted by the Bidder shall comprise the following components:

- Bid Form, Price & other Schedules (STRICTLY AS PER FORMAT) and Technical Data Sheets completed in accordance with Technical Specification
- All the Bids must be accompanied with the required EMD as mentioned in the Section-I against each tender.
- Tender documents duly stamped and signed on each page by authorized signatory

9.00 **BID FORM**

9.01 The Bidder shall submit one "Original" and one "Copy" of the Un-priced Bid Form, Price Schedules & Technical Data Sheets duly filled in as per attached specification/BOM etc enclosed.

9.02 **EMD**

The bidder shall furnish, as part of its bid, an EMD amounting as specified in the RFQ Table no.1. The EMD is required to protect the Purchaser against the risk of Bidder's conduct which would warrant forfeiture. The EMD shall be denominated in any of the following form:

a) The bidder shall furnish, as part of its bid, an EMD amounting as specified in the RFQ Table no.1. The EMD is required to protect the Purchaser against the risk of Bidder's conduct which would warrant forfeiture.

b) Bank Guarantee valid for One hundred Twenty (120) days from due date of submission or amended due date of submission plus minimum 30 days claim period drawn in favour of BSES Rajdhani Power Ltd,

BSES Bhawan, Nehru Place, New Delhi 110019The EMD may be forfeited in case of:

(a) The Bidder withdraws its bid during the period of specified bid validity

OR

(b) The case of a successful Bidder, if the Bidder does not

(i) Accept the Purchase Order/ Work Order, or

(ii) Furnish the required performance security BG.

Please note that bank details as below have been provided only for the purpose of making BG for EMD.
Beneficiary Name: BSES Rajdhani Power Limited
Bank Name : State Bank of India, New Delhi
A/c No. : 40214783615
IFSC Code : SBIN0009601

10.00 **BID PRICES**

10.01 Bidders shall quote for the entire Scope of Supply/ Work with a break-up of prices for individual items and Taxes & Duties. The total Bid Price shall also cover all the Supplier's obligations mentioned in or reasonably to be inferred from the Bidding Documents in respect of Design, Supply, Transportation to site, Erection, testing & commissioning all in accordance with the requirement of Bidding Documents The Bidder shall complete the appropriate Price Schedules included herein, stating the Unit Price for each item & total Price with taxes, duties & freight up to destination.

10.02 The prices offered shall be inclusive of all costs as well as Duties, Taxes and Levies paid or payable during execution of the supply work, breakup of price constituents, should be there. The Bidder is required, at his expense, to obtain all the information he may require to enable him to submit his tender including necessary visits to the site to ascertain the local conditions, procurement of necessary materials, labour, etc., requirements of the local/ government/ public authorities in such matters.

10.03 Prices quoted by the Bidder shall be **"Firm"** and not subject to any price adjustment during the performance of

the Contract. **A Bid submitted with an adjustable price/ Price Variation Clause will be treated as non -responsive and rejected.**

11.00 **BID CURRENCIES**

Prices shall be quoted in Indian Rupees Only**.**

12.00 **PERIOD OF VALIDITY OF BIDS**

12.01 Bids shall remain valid for 120 days from the due date of submission of the Bid & subsequent corrigendum/ amendment/ extension of due date of submission.

12.02 Notwithstanding Clause 12.01 above, the Purchaser may solicit the Bidder‟s consent to an extension of the Period of Bid Validity. The request and the responses thereto shall be made in writing and sent by post/ courier.

13.00 **ALTERNATIVE BIDS**

Bidders shall submit Bids, which comply with the Bidding Documents. Alternative Bids will not be considered. The attention of Bidders is drawn to the provisions regarding the rejection of Bids in the terms and conditions, which are not substantially responsive to the requirements of the Bidding Documents.

14.00 **FORMAT AND SIGNING OF BID**

14.01 The original Bid Form and accompanying documents, clearly marked "Original Bid" and "copy" must be received by the Purchaser at the date, time and place specified pursuant to Clauses 15.0 and 16.0. In the event of any discrepancy between the original and the copy, the original shall govern.

14.02 The original and copies of the Bid shall be typed or written in indelible ink and shall be signed by the Bidder or a person or persons duly authorized to sign on behalf of the Bidder. **Such authorization shall be indicated by written Power-of-Attorney accompanying the Bid.**

14.03 The Bid shall contain no interlineations, erasures or overwriting except as necessary to correct errors made by the Bidder, in which case such corrections shall be initialed by the person or persons signing the Bid.

15.00 **SEALING AND MARKING OF BIDS**

15.01 Bid submission: One original & one Copy (hard copies) of all the Bid Documents shall be sealed and submitted to the Purchaser before the closing time for submission of the bid.

15.02 The Technical Documents and the EMD shall be enclosed in a sealed envelope and the said envelope shall be super scribed with —"Technical & EMD". The price bid shall be inside another sealed envelope with super scribed "Financial Bid". Both these envelopes shall be sealed inside another big envelope. All the envelopes should bear the Name and Address of the Bidder and marking for the Original and Copy. The envelopes should be super scribed with —"Tender Notice No. & Due date of opening".

15.03 The Bidder has the option of sending the Bids in person. Bids submitted by Email/ Telex/ Telegram/ Fax will be rejected. No request from any Bidder to the Purchaser to collect the proposals from Courier/ Airlines/ Cargo Agents etc shall be entertained by the Purchaser.

16.00 **DEADLINE FOR SUBMISSION OF BIDS**

16.01 The original Bid, together with the required copies, must be received by the Purchaser at the address specified earlier.

16.02 The Purchaser may, at its discretion, extend the deadline for the submission of Bids by amending the Bidding Documents, in which case all rights and obligations of the Purchaser and Bidders previously subject to the deadline will thereafter be subject to the deadline as extended.

17.00 **ONE BID PER BIDDER**

Each Bidder shall submit only one Bid by itself. **No Joint Venture is acceptable**. A Bidder who submits or participates in more than one Bid will cause all those Bids to be rejected.

18.00 **LATE BIDS**

Any Bid received by the Purchaser after the deadline for submission of Bids prescribed by the Purchaser, pursuant to Clause 16.0, will be declared "Late" and shall be rejected and returned unopened to the Bidder.

19.00 **MODIFICATIONS AND WITHDRAWAL OF BIDS**

19.01 The Bidder is not allowed to modify or withdraw its Bid after the Bid's submission.

20.00 **PROCESS TO BE CONFIDENTIAL**

Information relating to the examination, clarification, evaluation and comparison of Bids and recommendations for the award of a contract shall not be disclosed to Bidders or any other persons not officially concerned with such process. Any effort by a Bidder to influence the Purchaser's processing of Bids or award decisions may result in the rejection of the Bidder's Bid.

21.00 **CLARIFICATION OF BIDS**

To assist in the examination, evaluation and comparison of Bids, the Purchaser may, at its discretion, ask the Bidder for a clarification of its Bid. All responses to requests for clarification shall be in writing and no change in the price or substance of the Bid shall be sought, offered or permitted.

22.0 **PRELIMINARY EXAMINATION OF BIDS/ RESPONSIVENESS**

22.01 Purchaser will examine the Bids to determine whether they are complete, whether any computational errors have been made, whether required sureties have been furnished, whether the documents have been properly signed, and whether the Bids are generally in order. Purchaser may ask for submission of original documents in order to verify the documents submitted in support of qualification criteria.

22.02 Arithmetical errors will be rectified on the following basis. If there is a discrepancy between the unit price and the total price per item that is obtained by multiplying the unit price and quantity, the unit price shall prevail and the total price per item will be corrected. If there is a discrepancy between the Total Amount and the sum of the total price per item, the sum of the total price per item shall prevail and the Total Amount will be corrected.

22.03 Prior to the detailed evaluation, Purchaser will determine the substantial responsiveness of each Bid to the Bidding Documents including production capability and acceptable quality of the Goods offered. A substantially responsive Bid is one, which conforms to all the terms and conditions of the Bidding Documents without material deviation.

22.04 Bid determined as not substantially responsive will be rejected by the purchaser and/or the Purchaser and may not subsequently be made responsive by the Bidder by correction of the non - conformity.

23.00 EVALUATION AND COMPARISON OF BIDS

The evaluation of Bids shall be done based on the delivered cost competitiveness basis.

23.01 The evaluation of the Bids shall be a stage-wise procedure. The following stages are identified for evaluation purposes: In the first stage, the Bids would be subjected to a responsiveness check. The Technical Proposals and the Conditional ties of the Bidders would be evaluated.

23.02 Subsequently, the Financial Proposals along with Supplementary Financial Proposals, if any, of Bidders with Techno-commercially Acceptable Bids shall be considered for final evaluation.

23.03 The Purchaser's evaluation of a Bid will take into account, in addition to the Bid price, the following factors, in the manner and to the extent indicated in this Clause:

- Delivery Schedule
- Conformance to Qualifying Criteria
- Deviations from Bidding Documents

Bidders shall base their Bid price on the terms and conditions specified in the Bidding Documents.

The cost of all quantifiable deviations and omissions from the specification, terms and conditions specified in Bidding Documents shall be evaluated. The Purchaser will make its own assessment of the cost of any deviation for the purpose of ensuring fair comparison of Bids.

23.04 Any adjustments in price, which result from the above procedures, shall be added for the purposes of comparative evaluation only to arrive at an "Evaluated Bid Price". Bid Prices quoted by Bidders shall remain unaltered.

24.00 CONTACTING THE PURCHASER

24.01 If any Bidder wishes to contact the Purchaser on any matter related to the Bid, from the time of Bid opening to the time of contract award, the same shall be done in writing only.

24.02 Any effort by a Bidder to influence the Purchaser‘s decisions in respect of Bid evaluation, Bid comparison or Contract Award, will result in the rejection of the Bidder‘s Bid.

25.00 THE PURCHASER ’S RIGHT TO ACCEPT ANY BID AND TO REJECT ANY OR A LL BIDS

The Purchaser reserves the right to accept or reject any Bid and to annul the Bidding process and reject all Bids at any time prior to award of Contract, without thereby incurring any liability to the affected Bidder or Bidders or any obligation to inform the affected Bidder or Bidders of the grounds for the Purchaser‘s action.

26.00 AWARD OF CONTRACT

26.01 The Purchaser will award the Contract to the successful Bidder whose Bid has been determined to be the lowest-evaluated responsive Bid, provided further that the Bidder has been determined to be qualified to satisfactorily perform the Contract. Purchaser reserves the right to award order to other bidders in the tender, provided it is required for timely execution of project & provided he agrees to come to the lowest rate.

26.02 The Purchaser intends to issue separate Purchase/Work Orders viz

a) Purchase Order for Supply
b) Work Order for Installation, Testing & Commissioning

27.00 **THE PURCHASER 'S RIGHT TO VARY QUANTITIES**

The Purchaser reserves the right to vary the quantity i.e. increase or decrease the numbers/quantities without any change in terms and conditions during the execution of the Order.

27.02 The Purchaser intends to issue separate Purchase/Work Orders viz
a) Purchase Order for Supply
b) Work Order for Installation, Testing & Commissioning
c) Civil Work Order

28.00 **LETTER OF INTENT/ NOTIFICATION OF AWARD**

The letter of intent/ Notification of Award shall be issued to the successful Bidder whose bids have been considered responsive, techno-commercially acceptable and evaluated to be the lowest (L1). The successful Bidder shall be required to furnish a letter of acceptance within 7 days of issue of the letter of intent/ Notification of Award by Purchaser. The date of LOI/PO shall be treated as Start date of work.

29.00 **CONTRACT PERFORMANCE BANK GAURANTEE**

Within 15 days of the receipt of Notification of Award/ Letter of Intent/ PO from the Purchaser, the successful Bidder shall furnish the Performance Bank Guarantee towards faithful performance of Contract for an amount of 10% (Ten percent) of the Contract Price. The Performance Bond shall be valid up to completion period/ handing over, whichever is earlier plus 3 months claim period. Upon submission of the performance security, the EMD shall be released. 3 (three) nos. separate CPBG's shall be submitted against Supply, ETC & Civil.

30.00 **CORRUPT OR FRADULENT PRACTICES**

30.01 The Company requires that the Bidders observe the highest standard of ethics during the procurement and execution of the Project. In pursuance of this policy, the Company:

(a) Defines, for the purposes of this provision, the terms set forth below as follows:

"Corrupt practice" means behaviour on the part of officials in the public or private sectors by which they improperly and unlawfully enrich themselves and/or those close to them, or induce others to do so, by misusing the position in which they are placed, and it includes the offering, giving, receiving, or soliciting of anything of value to influence the action of any such official in the procurement process or in contract execution; and

"Fraudulent practice" means a misrepresentation of facts in order to influence a award process or the execution of a contract to the detriment of the Company, and includes collusive practice among Bidders (prior to or after Bid submission) designed to establish Bid prices at artificial non -competitive levels and to deprive the Company of the benefits of free and open competition.

(b) Will reject a proposal for award if it determines that the Bidder recommended for award has engaged in corrupt or fraudulent practices in competing for the contract in question;

(c) Will declare a firm ineligible, either indefinitely or for a stated period of time, to be awarded a contract if it at any time determines that the firm has engaged in corrupt or fraudulent practices in competing for, or in executing, a contract.

30.02 Furthermore, Bidders shall be aware of the provision stated in the Terms and Conditions of Contract.

31.00 **COMPLETION PERIOD**

10 Months from the date of PO

2 months: Engineering - Drawing submission & approval and release of civil drawings to site for construction.
5 months: Civil Construction at Site (by Consumer) and Electrical equipment Manufacturing.
3 months: Erection, Testing and Commissioning of electrical equipment and related accessories and handing over.

Section III

SPECIAL TERMS AND CONDITIONS OF CONTRACT

1.1. Bidders are requested to visit the site to understand the scope of work, site conditions and requirements prior to Bidding. Hence, no price/ time escalation shall be admissible on these accounts.

1.2. The scope of this tender includes supply, survey, design, engineering, manufacturer, shop testing, inspection, packing, dispatch, loading, unloading and storage at site, storage and construction insurance, assembly, erection, structural, complete pre-commissioning checks, testing and commissioning at site, obtaining statutory clearance & certification from state electrical inspector and handing over of Grid to owner on single point responsibility basis.

1.3. The scope includes supply of all barricading, free issued materials (including installation, transportation, loading & unloading), dewatering, watch and ward and transportation of scrap (generated at Site), balance free-issued material, dismantled material from site to BRPL store including loading & unloading and no additional charges shall be paid against these activities. Used barricading material will be taken back by bidder soon after job is handed over or as directed by BRPL Engineer-In-Charge (E-I-C). No additional cost for these items will be paid to the Bidder. Any leakage, pilferage and damage of the material shall be in vendor's scope.

1.4. Joints & Terminations installation shall only be done by OEM. No additional cost for this item will be paid to the Bidder. Contractor to provide all support to the Jointers for doing Joints & Terminations of Joint Kits.

1.5. Prices for all the activities shall be FIRM till the actual completion of the job. Statutory variation will be allowed for direct supplies only wherever breakup of Taxes & Duties are available in Price Bid. In case bidder has not submitted any price breakup, no variation on account of statuary variation shall be paid extra by BRPL.

1.6. There will be no price escalation given to bidder even if there is delay in the project due to ROW permission.

1.7. Permission from road owning agencies & statutory clearance for road cutting shall be taken by Bidder. The Bidder shall follow-up with local authorities and other connected persons that may require carrying out the job under this work order.

1.8. Electrical Inspector Clearance fees shall be in Bidder's scope. The related fees, payments and pursuance work shall be in scope of Bidder only.

1.9. Bidder has to submit the technical parameters with details of Spares for each rating with catalogue, reference codes etc.

1.10. Wherever BRPL specifications are not available relevant IS/IEC to be followed. All Drawings mentioned in the Tender Specification and other required for the completeness of the tender shall be submitted. Drawing submission process shall not be deemed complete if all the requirements are not complied during the submission of the same.

1.11. The bidder should have own testing equipment's/they have to provide like IR Tester, Hi Pot Test Kit and Earth Tester and Sheath Integrity test kit with Calibration Certificates for testing the cables. Sheath integrity test will in scope bidder before charging of cable(for 66 kV Cable only)

1.12. The Bidder should have own Safety equipment like Neon Tester, Portable Earth, Earthing discharge rod etc. along with Calibration Certificates of all the equipment.

1.13. The Bidder should have all major tools and tackles required for installation, testing & commissioning works.

1.14. Bidder has to submit the item wise price bifurcation in bid. Unpriced copy must be attached with the Part A. Reverse Auction will be carried out on Lump sum Basis/Total Landed Cost i.e. Supply + ETC

1.15. Any other material not specifically mentioned above but required for successful commissioning and operation is in the scope of bidder. Prior approval shall be taken from central engineering department before execution. Commercial approval shall be taken from C&M Department before execution.

1.16. Successful bidder has to adhere to the statutory compliance.

1.17. Successful Bidder has to depute the safety officer and quality officer separately at site for whole duration and they have to submit the safety report and quality report to BRPL E-I-C on weekly basis.

1.18. Successful bidder has to send the weekly progress report to BRPL EIC.

1.19. In case of any major deviation, deletion or addition which bidder may feel is relevant to this project & for its safe operation and completion of works; Bidder may clearly highlight and communicate the same to the purchaser with his bid.

1.20. Necessary Statutory Clearances from CEI of Delhi & any other authority for energizing shall be in the scope of this tender. However, any statutory fees shall be borne by BRPL on production of documentary evidence.

1.21. Taking over after commissioning of the complete system and final approval of Electrical Inspector & Compliance to punch points observed to the satisfaction of Projects as per statutory requirements, system shall be handed over to BRPL.

1.22. **Guarantee period/ Defect Liability period:**

The Guarantee Period will be equipment/ service/ work specific and shall be as specified in the Technical Specifications for the equipment/ material/ service/ work and where Technical specifications are not part of contract documents or guarantee period is not specified in the Technical specifications, the guarantee period shall be as per the Special Terms and Conditions of the Contract. In case of no mention of the guarantee period in Technical specifications, Defect liability period will be 24 Months from the Date of Commissioning or 30 months from the date of delivery of final lot of supplies made, whichever is later.

If during the defects liability period any materials/ items are found to be defective, these shall be replaced or rectified by the bidder at his own cost within 30 days from the date of receipt of intimation

1.23. **Failure during Guarantee Period:**

If the equipment and material supplied/ service or work rendered under the contract fails to perform its due, rated & intended quality performance, during the Guarantee period, the bidder is liable to undertake repair/rectify/replace the equipment and material supplied/service or work rendered under the contract within time frame as specified below at bidder's cost to make the equipment and material supplied/service or work rendered under the contract of performing its due, rated and intended quality performance. If bidder fails to repair/rectify/replace the equipment or material supplied/service or work rendered under the contract, failed in Guarantee Period, purchaser will be at liberty to get the same done at bidder's risks and costs and recover all such expenses plus the purchaser own charges (@ 15% of expenses incurred), from the bidder or from the "Performance Bank Guarantee" as the case may be.
If during the Warranty/ Guarantee period some parts of the supplies are replaced owing to the defects/ damages under the Warranty, the Warranty period for such replaced parts shall be until the expiry of twelve months from the date of such replacement or renewal or until the end of original Guarantee period, whichever is later.

a) Service Engineer Availability to Attend, Identify & Restore Defects (Minor) of materials/Equipment's under Guarantee Period within 48 Working Hours (Exclusion of Material Support Cases)
b) Spare Material Delivery for rectification of defect (Major) Under Guarantee Period within Two Weeks. Bidder must keep Requisite Inventory of Critical Spares & Other Equipments Covered in Guarantee Period to Restore Equipment within Two Weeks.
c) In Case Of Complete Replacement of material, within a Period of 4 Weeks.

Note: BRPL is in the business of Power distribution and is committed to providing reliable and continuous power supply to its customers. In case of any fault in the system, BRPL's top most priority is to rectify the fault and restore the system as soon as possible and maintain the supply.

If during the defect liability period any fault occurs in the system due to faulty materials, design or workmanship, BRPL shall intimate the vendor of such occurrence for taking immediate corrective action.

However, if the situation, in BRPL's sole discretion warrants an emergency restoration, it reserves the right to take immediate action for identifying the fault and restoring the system with available resources & materials or with help from any other third party agency under intimation to the Vendor. All costs of replacement, substitution, shipping, labour and other related expenses including taxes and levies incurred in connection with the restoration of fault plus 15% of expenses incurred as administrative overheads shall be for the account of Vendor. BRPL will charge the vendor for the costs incurred for fault restoration or may set off such costs against any amounts payable by BRPL to the Vendor or deduct from the PBG submitted by the Vendor. Vendor shall pay BRPL the amount within 30 days.

Root cause analysis of the fault shall be done jointly by BRPL's CES & O&M teams and Vendor. In case the fault is due to any reason other than faulty materials, design or workmanship, Vendor shall be exempted from any further action or Cost.

1.24. All the bay equipment (i.e- LA, CT, PT, Disc Insulator, String, Suspension Insulator, Bushing etc.) shall be Polymeric type in the place of porcelain with creepage 31mm/kV. Rest of the parameter to be followed as per tech spec.

1.25. **PROJECT INFORMATION & COMPLETION**

The contractor shall be fully responsible to complete the project in time. It is desired that the project should be completed as per the schedule from the date of LOI or purchase order whichever is earlier. The detailed

completion schedule shall be prepared by vendor and shall be submitted at the time of detailed engineering for approval. Vendor has to submit the progress report fortnightly with this tender/ as asked by the Purchaser.

1.26. PROJECT IMPLEMETATION & EXECUTION CONTROL

The bidders are requested to submit the following along with the bid, about the project implementation & execution methodology.

a) Write up/ overview of project Plan
b) Implementation Methodology
c) Project Organization Chart for Representatives, Project Office & site office teams along with the functions.
d) Bar Chart & Network Diagram (with critical path) for various activities to achieve scheduled completion.

1.27 SUSPENSION OF WORK

Purchaser reserves the right to suspend and reinstate execution of the whole or any part of the Works without Invalidating the provisions of the Contract. Orders for suspension or reinstatement of the works will be issued to the Contractor in writing. The time for Completion of the Works will be extended for a period equal to duration of the suspension.
For an aggregate suspension period of less than Six (6) months the Contractor shall not claim any reimbursement.
Any necessary and demonstrable costs incurred by the Contractor, as a result of suspension of the Works beyond the above period, will be paid by The Purchaser, provided such costs are substantiated to the satisfaction of the Purchaser. For this purpose, only the direct costs incurred shall be considered and this shall exclude any overheads, incidentals or profit. The Purchaser's decision in this regard will be final and binding. The Purchaser shall not be responsible for any liability if suspension or delay is due to some default on the part of the Contractor or its subcontractor.
Purchaser's decision in this regard shall be final and binding. Purchaser shall not be responsible for any liability if suspension is caused due to some default on the part of the supplier and its sub-suppliers.

1.28 UNFORESEEABLE SUB-SURFACE CONDITIONS

Notwithstanding anything contained elsewhere in the contract, if during the execution stage, the Contractor encounters on the Site any sub-surf ace conditions that are different from those envisaged from the soil testing/ data available at the site, or the Contractor's own testing, which necessitates corrective action/ changes in the method(s) of work, all costs related with such changes shall be borne by the Contractor. These conditions shall no way be compensated either for time, or costs, by the Purchaser

SECTION IV
GENERAL TERMS AND CONDITIONS - SUPPLY

1.01 All the Bids shall be prepared and submitted in accordance with these instructions.

1.02 Bidder shall bear all costs associated with the preparation and delivery of its Bid, and the Purchaser will in no case shall be responsible or liable for these costs.

1.03 The Bid should be submitted by the Bidder in whose name the bid document has been issued and under no circumstances it shall be transferred /sold to the other party.

1.04 The Purchaser reserves the right to request for any additional information and also reserves the right to reject the proposal of any Bidder, if in the opinion of the Purchaser, the data in support of RFQ requirement is incomplete.

1.05 The Bidder is expected to examine all instructions, forms, terms & conditions and specifications in the Bid Documents. Failure to furnish all information required in the Bid Documents or submission of a Bid not substantially responsive to the Bid Documents in every respect may result in rejection of the Bid. However, the Purchaser's decision in regard to the responsiveness and rejection of bids shall be final and binding without any obligation, financial or otherwise, on the Purchaser.

2.0 Definition of Terms

2.01 "Purchaser" shall mean BSES Rajdhani Power Limited, on whose behalf this bid enquiry is issued by its authorized representative/ officers.

2.02 "Bidder" shall mean the firm who quotes against this bid enquiry issued by the Purchaser. "Supplier" or "Supplier" shall mean the successful Bidder and/or Bidders whose bid has been accepted by the Purchaser and on whom the "Letter of Acceptance" is placed by the Purchaser and shall include his heirs, legal representatives, successors and permitted assigns wherever the context so admits.

2.03 "Supply" shall mean the Scope of Contract as described.

2.04 "Specification" shall mean collectively all the terms and stipulations contained in those portions of this bid document known as RFQ, Commercial Terms & Condition, Instructions to Bidders, Technical Specifications and the Amendments, Revisions, Deletions or Additions, as may be made by the Purchaser from time to time.

2.05 "Letter of Acceptance" shall mean the official notice issued by the Purchaser notifying the Supplier that his proposal has been accepted and it shall include amendments thereto, if any, issued by the Purchaser. The "Letter of Acceptance" issued by the Purchaser shall be binding on the "Supplier" The date of Letter of Acceptance shall be taken as the effective date of the commencement of contract.

2.06 "Month" shall mean the calendar month and "Day" shall mean the calendar day.

2.07 "Codes and Standards" shall mean all the applicable codes and standards as indicated in the Specification.

2.08 "Offer Sheet" shall mean Bidder's firm offer submitted to BRPL in accordance with the specification.

2.09 "Contract" shall mean the "Letter of Acceptance/Purchase Order" issued by the Purchaser.

2.10 "Contract Price" shall mean the price referred to in the "Letter of Acceptance/Purchase Order".

2.11 "Contract Period" shall mean the period during which the "Contract" shall be executed as agreed between the Supplier and the Purchaser in the Contract inclusive of extended contract period for reason beyond the control of the Supplier and/or Purchaser due to force majeure.

2.12 "Acceptance" shall mean and deemed to include one or more of the following as will be stipulated in the specification:

a) The written acceptance of material by the inspector at suppliers works to ship the materials.
b) Acceptance of material at Purchaser site stores after its receipt and due inspection/ testing and release of material acceptance voucher.
c) Where the scope of the contract includes supplying, acceptance shall mean issue of necessary equipment/ material takeover receipt after installation & commissioning and final acceptance.

3.0 Contract Documents & Priority

Contract Documents: The terms and conditions of the contract shall consist solely of these RFQ conditions and the offer sheet. The several documents forming the Contract are to be taken as mutually explanatory of one another, but in case of ambiguities or discrepancies, the same shall be explained and adjusted by the Purchaser, who shall thereupon issue to the Contractor, instructions thereon. In such event, unless otherwise provided in the Contract, the priority of the documents forming the Contract shall be as follows:

1. Any amendments to Contract
2. Commercial Terms & Conditions of the Contract
3. Clarifications/addendum/corrigendum to Tender
4. Terms & Conditions of the Tender

4.0 Scope of Supply - General

4.01 The "Scope of Supply" shall be on the basis of Bidder's responsibility, completely covering the obligations, responsibility and supplies provided in this Bid enquiry whether implicit or explicit.

4.02 Bidder shall have to quote for the Bill of quantities as listed elsewhere.

4.03 All relevant drawings, data and instruction manuals.

5.0 Quality Assurance and Inspection

5.01 Immediately on award of contract, the bidder shall prepare detailed quality assurance plan/test procedure identifying the various stages of manufacture, quality checks performed at each stage, raw material inspection and the Customer hold points. The document shall also furnish details of method of checking, inspection and acceptance standards/ values and get the approval of Purchaser before proceeding with manufacturing. However, Purchaser shall have right to review the inspection reports, quality checks and results of suppliers in house inspection department which are not Customer hold points and the supplier shall comply with the remarks made by purchaser or his representative on such reviews with regards to further testing, rectification or rejection, etc. In case of standard items, BRPL shall forward the standard QAP which is to be followed by vendor during manufacturing.

5.02 Witness and Hold points are critical steps in manufacturing, inspection and testing where the supplier is obliged to notify the Purchaser in advance so that it may be witnessed by the Purchaser. Final inspection is a mandatory hold point. The supplier can proceed with the work past a hold point only after clearance by purchaser or a witness waiver letter from BRPL.

5.03 The performance of waiver of QA activity by Purchaser at any stage of manufacturing does not relieve the supplier of any obligation to perform in accordance with and meet all the requirements of the procurement documents and also all the codes & reference documents mentioned in the procurement document nor shall it preclude subsequent rejection by the purchaser.

5.04 On completion of manufacturing the items can only be dispatched after receipt of dispatch instructions issued by the Purchaser.

5.05 All in-house testing and inspection shall be done without any extra cost. The in-house inspection shall be carried out in presence of BRPL/ BRPL authorized third party inspection agency. Cost of Futile/abortive visit(s) shall be debited from the invoices

5.06 Purchaser reserves the right to send any material being supplied to any recognized laboratory for testing, wherever necessary and the cost of testing shall be borne by the Bidder. In case the material is found not in order with the technical requirement/ specification, the charges along with any other penalty which may be levied is to be borne by the bidder. To avoid any complaint the supplier is advised to send his representative to the stores to see that the material sent for testing is being sealed in the presence of bidder's representative.

6.0 Packing, Packing List & Marking

6.01 **Packing:** Supplier shall pack or shall cause to be packed all Commodities in crates/ boxes/ drums/ containers/ cartons and otherwise in such a manner as shall be reasonably suitable for shipment by road or rail to BRPL, Delhi/ New Delhi stores/ site without undue risk of damage in transit.

6.02 **Packing List:** The contents of each package shall be itemized on a detailed list showing the exact weight, extreme outside dimensions (length, width & weight) of each container/box/drum/carton, Item SAP Code, PO No & date. One copy of the packing list shall be enclosed in each package delivered.

7.01 Price basis for supply of materials

Bidder has to quote their prices on Landed Cost Basis and quote separate price for each item.

FIRM prices for supply to BRPL Delhi/New Delhi stores inclusive of packing, forwarding, loading at manufacturer's premises, payment of all taxes, GST, Freight, any other local charges etc.

The above supply prices shall also include unloading at BRPL Delhi/New Delhi stores/ site.

Transit insurance will be arranged by bidder.

8.0 Terms of payment and billing – SUPPLY

a) 10% advance against submission of BG of equivalent amount valid up to completion period/handing over, whichever is earlier plus 3 months claim period. In case of delay, the BG shall be extended suitably.

b) 75% pro-rata of supply value shall be payable against R/A bills for supply of equipment and materials within 30 days against receipt of material at site and submission of following documents duly certified by BRPL Project-in-charge:

i. Consignee copy of LR
ii. Detailed invoice showing commodity description, qty, unit & total price,
iii. Original certificate issued by BRPL confirming receipt of material at site & acceptance
iv. Dispatch clearance & inspection report issued by the inspection authority
v. Packing List, Test Reports
vi. Guarantee Certificate.

c) 10% pro-rata after installation/erection of equipment duly certified by BRPL Project-in-charge

d) 5% pro-rata after completion of successful acceptance testing, commissioning and Handing Over of the entire Installation and duly certified by BRPL Project-in-charge and submission of PBG of 10% of contract value valid up to Defect Liability period i.e. 24 months from the date of Handing over of entire Installation Plus 3 months towards Claim period.

9.0 Price Validity

9.01 All bids submitted shall remain valid, firm and subject to unconditional acceptance by BRPL Delhi for 120 days

from the due date of submission & subsequent corrigendum/amendment/ extension of due date of submission. For awarded suppliers/contractors, the prices shall remain valid and firm till contract completion.

10.0 Performance Guarantee

10.01 Bank guarantee shall be drawn in favour of "BSES Rajdhani Power Ltd" as applicable. The performance Bank guarantee shall be in the format as specified by BRPL.

10.02 Contract performance bank guarantee of total 10% of the contract price shall be submitted within 15 days of award of contract with the validity till completion of the contract period.

10.03 Contractor shall submit the performance bank guarantee equivalent to the 10% of the contract value at the time of claiming the last payment as per clause no. 8.0(C) (Terms of payment and billing – SUPPLY), with the validity of the bank guarantee till Defect Liability Period plus 3 months towards Claim period.

11.0 Forfeiture

11.01 Each Performance Bond established under Clause 10.0 shall contain a statement that it shall be automatically and unconditionally forfeited without recourse and payable against the presentation by BRPL of this Performance Bond, to the relevant bank referred to above, together with a simple statement that supplier has failed to comply with any term or condition set forth in the Contract.

11.02 Each Performance BG established under will be automatically and unconditionally forfeited without recourse if BRPL at its sole discretion determines that supplier has failed to comply with any term or condition set forth in the contract.

12.0 Release

All Performance Bonds will be released without interest within seven (7) days from the last date up to which the Performance Bond has to be kept valid (as defined in Clause 10.0) except for the case set forth in Clause 21.0.

13.0 Guarantee of Performance

The bidder shall stand guarantee that the equipment and material supplied/service or work rendered under the contract is free from design, manufacturing, material, construction, erection & installation and workmanship & quality defects and is capable of its due, rated and intended quality performance, as an integrated product delivered under the contract for a specific period termed as Guarantee Period. The bidder should also guarantee that the equipment/material is new and unused except for the usage required for the tests and checks required as part of quality assurance.

14.0 Guarantee Period/ Defects Liability Period

The Guarantee Period will be equipment/ service/ work specific and shall be as specified in the Technical Specifications for the equipment/ material/ service/ work and where Technical specifications are not part of contract documents or guarantee period is not specified in the Technical specifications, the guarantee period shall be as per the Special Terms and Conditions of the Contract. In case of no mention of the guarantee period in Technical specifications, Defect liability period will be 24 Months from the Date of Commissioning or 30 months from the date of delivery of final lot of supplies made, whichever is later.

If during the defects liability period any materials/ items are found to be defective, these shall be replaced or rectified by the bidder at his own cost within 30 days from the date of receipt of intimation.

Cost of repairs on failure in Guarantee Period:

The cost of repairs/ rectification/ replacement, apart from the actual cost of repairs/ rectification/ replacement is also inclusive of all bidder costs of required transportation, site inspection/ mobilization/ dismantling and re-installation costs as applicable, to be borne by the bidder. The bidder has to ensure that the interruption in the usage of intended purpose of the equipment is minimized to the maximum extent In lieu of the time taken for repairs/ rectification/ replacement.

15.0 Latent Defect:

Hidden defects in manufacturing or design of the product supplied and which could not be identified by the tests conducted but later manifested during operation of the equipment are termed as latent defects. Bidder shall further be responsible for 'free replacement' for another period of FIVE years from the end of the guarantee period for any 'Latent Defects' if noticed and reported by the Purchaser.

16.0 Support beyond the Guarantee Period

The Bidder shall ensure availability of spares and necessary support for a period of at least 10 years post completion of guarantee period of equipment/ technology supplied against this contract. BRPL shall be duly intimated by the Vendor of End of Life Support for the product/ technology supplied at least 12 months in advance.

17.0 Return, Replacement or Substitution

BRPL shall give Supplier notice of any defective Commodity promptly after becoming aware thereof. BRPL may at its discretion elect to return defective Commodities to Supplier for replacement, free of charge to BRPL, or may reject such Commodities and purchase the same or similar Commodities from any third party. In the latter case BRPL shall furnish proof to Supplier of the cost of such substitute purchase. In either case, all costs of any replacement, substitution, shipping, labour and other related expenses incurred in connection with the return and replacement or for the substitute purchase of a Commodity hereunder should be for the account of Supplier. BRPL may set off such costs against any amounts payable by BRPL to Supplier. Supplier shall reimburse BRPL for the amount, if any, by which the price of a substitute Commodity exceeds the price for such Commodity as quoted in the Bid.

18.0 Effective Date of Commencement of Contract:

The date of the issuance of the Letter of Acceptance/Purchase Order shall be treated as the effective date of the commencement of Contract.

19.0 Time – The Essence of Contract

The time and the date of completion of the "Supply"" as stipulated in the Letter Of Acceptance/ Purchase order issued to the Supplier shall be deemed to be the essence of the "Contract". The Supply has to be completed no later than the aforesaid Schedule and date of completion of supply.

20.0 The Laws and Jurisdiction of Contract:

The laws applicable to this Contract shall be the Laws in force in India. To the best of their ability, the parties hereto shall endeavour to resolve amicably between themselves all disputes arising in connection with this work order. If the same remain unresolved within thirty (30) days of the matter being raised by either party, either party may refer the dispute for adjudication by arbitration. The arbitration shall be undertaken by the sole arbitrator jointly appointed by the parties. In case the parties fail to arrive at consensus to appoint the sole

arbitrator, either party may approach the Court for appointing an arbitrator under Section 11 of the Arbitration and Conciliation Act, 1996 and the award of the said sole arbitrator, shall be final and binding upon the parties. The arbitration proceeding shall be conducted in accordance with this provisions of the Indian Arbitration & Conciliation Act, 1996 (as amended up to date) and the venue of such arbitration shall be the city of New Delhi only. The Arbitration shall be conducted in English language only. The courts at Delhi shall have the exclusive jurisdiction over the subject matter of Arbitration/dispute. The cost of the Arbitration shall be equally shared by the parties as per directions of the Sole Arbitrator.

21.0 Events of Default

21.01 Events of Default. Each of the following events or occurrences shall constitute an event of default ("Event of Default") under the Contract:

(a) Supplier fails or refuses to pay any amounts due under the Contract;

(b) Supplier fails or refuses to deliver Commodities conforming to this RFQ/ specifications, or fails to deliver Commodities within the period specified in P.O. or any extension thereof

(c) Supplier becomes insolvent or unable to pay its debts when due, or commits any act of bankruptcy, such as filing any petition in any bankruptcy, winding-up or reorganization proceeding, or acknowledges in writing its insolvency or inability to pay its debts; or the Supplier's creditors file any petition relating to bankruptcy of Supplier;

(d) Supplier otherwise fails or refuses to perform or observe any term or condition of the Contract and such failure is not remediable or, if remediable, continues for a period of 30 days after receipt by the Supplier of notice of such failure from BRPL.

22.0 Consequences of Default

(a) If an Event of Default shall occur and be continuing, BRPL may forthwith terminate the Contract by written notice.

(b) In the event of an Event of Default, BRPL may, without prejudice to any other right granted to it by law, or the Contract, take any or all of the following actions;

(i) present for forfeiture to the relevant bank the Performance Bond;

(ii) Purchase the same or similar Commodities from any third party; and/or

(iii) Recover any losses and/or additional expenses BRPL may incur as a result of Supplier's default.

23.0 Liquidated Damages

23.01 If supply of items/ equipment is delayed beyond the supply schedule as stipulated in LOI/ PO, then the Supplier shall be liable to pay the Purchaser for delay a sum of 0.5% (half percent) of the total price for every week of delay or part thereof for undelivered units.

23.02 The total amount for delay under the contract will be subject to a maximum of ten percent (10%) of the total contract value.

23.03 The Purchaser may, without prejudice to any method of recovery, deduct the amount for such damages from any amount due or which may become due to the Supplier or from the Performance Bond or file a claim against the supplier. The levy payment or deduction of such damages shall not relieve the Contractor from his obligation to complete the Supply on time or from any other part of his obligation and liabilities under the Contract. Once the maximum is reached, the Company reserves the right for termination of contract without any liabilities to the Company.

In the event of an extension of time being granted by the EIC, in writing for the Completion of the works, this clause shall be applicable after the expiry of such an extended period.

24.0 Statutory variation in Taxes and Duties

The total order value shall remain **FIRM** within stipulated delivery period and shall not be adjusted on account of any price increase/ variations in commodities & raw materials. However Statutory Taxes, duties and Levies imposed by Competent Authorities by way of fresh notification(s) within the stipulated delivery period shall be borne by BRPL on submission of necessary documents claiming such variation. The variation will be applicable only on such value wherever price breakup of same is submitted by vendor/available in PO/WO

25.0 Force Majeure

25.01 General

An "Event of Force Majeure" shall mean any event or circumstance not within the reasonable control directly or indirectly, of the Party affected, but only if and to the extent that:

(i) Such event or circumstance materially and adversely affects the ability of the affected Party to perform its obligations under this Contract, and the affected Party has taken all reasonable precautions, due care and reasonable alternative measures in order to prevent or avoid the effect of such event on the affected party's ability to perform its obligations under this Contract and to mitigate the consequences thereof.

(ii) For the avoidance of doubt, if such event or circumstance would not have materially and adversely affected the performance of the affected party had such affected party followed good industry practice, such event or circumstance shall not constitute force majeure.

(iii) Such event is not the direct or indirect result of the failure of such Party to perform any of its obligations under this Contract.

(iv) Such Party has given the other Party prompt notice describing such events, the effect thereof and the actions being taken in order to comply with above clause.

25.02 Specific Events of Force Majeure subject to the provisions of above clause, Events of Force Majeure shall include only the following to the extent that they or their consequences satisfy the above requirements:

(i) The following events and circumstances:
   a) Effect of any natural element or other acts of God, including but not limited to storm, flood, earthquake, lightning, cyclone, landslides or other natural disasters.
   b) Explosions or fires

(ii) War declared by the Government of India, provided that the ports at Mumbai are declared as a war zone.

(iii) Dangers of navigation, perils of the sea.

25.03 Notice of Events of Force Majeure If a force majeure event prevents a party from performing any obligations under the Contract in part or in full that party shall:

i) Immediately notify the other party in writing of the force majeure events within 7(seven) working days of the occurrence of the force majeure event
ii) Be entitled to suspend performance of the obligation under the Contract which is affected by force majeure event for the duration of the force majeure event.
iii) Use all reasonable efforts to resume full performance of the obligation as soon as practicable
iv) Keep the other party informed of all such efforts to resume full performance of the obligation on a regular basis.
v) Provide prompt notice of the resumption of full performance or obligation to the other party.

25.04 Mitigation of Events of Force Majeure Each Party shall:

(i) Make all reasonable efforts to prevent and reduce to a minimum and mitigate the effect of any delay occasioned by an Event of Force Majeure including recourse to alternate methods of satisfying its obligations under the Contract;
(ii) Use its best efforts to ensure resumption of normal performance after the termination of any Event of Force Majeure and shall perform its obligations to the maximum extent practicable as agreed between the Parties; and
(iii) Keep the other Party informed at regular intervals of the circumstances concerning the event of Force Majeure, with best estimates as to its likely continuation and what measures or contingency planning it is taking to mitigate and or terminate the Event of Force Majeure.

25.05 Burden of Proof In the event that the Parties are unable in good faith to agree that a Force Majeure event has occurred to an affected party, the parties shall resolve their dispute in accordance with the provisions of this Agreement. The burden of proof as to whether or not a force Majeure event has occurred shall be upon the party claiming that the force majeure event has occurred and that it is the affected party.

25.06 Termination for Certain Events of Force Majeure. If any obligation of any Party under the Contract is or is reasonably expected to be delayed or prevented by a Force Majeure event for a continuous period of more than 3 months, the Parties shall promptly discuss in good faith how to proceed with a view to reaching a solution on mutually agreed basis. If a solution on mutually agreed basis cannot be arrived at within a period of 30 days after the expiry of the period of three months, the Contract shall be terminated after the said period of 30 days and neither Party shall be liable to the other for any consequences arising on account of such termination.

25.07 The Purchaser may terminate the contract after giving 7(seven) days notice if any of following occurs:

a) Contractor fails to complete execution of works within the approved schedule of works, terms and conditions
b) In case the contractor commits any Act of Insolvency, or adjudged insolvent
c) Has abandoned the contract
d) Has failed to commence work or has suspended the progress of works
e) Has failed to proceed the works with due diligence and failed to make such due progress

25.08 Limitation of Force Majeure event. The Supplier shall not be relieved of any obligation under the Contract solely because cost of performance is increased, whether as a consequence of adverse economic consequences or otherwise.

25.09 Extension of Contract Period due to Force Majeure event The Contract period may be extended by mutual agreement of Parties by way of an adjustment on account of any period during which an obligation of either Party is suspended due to a Force Majeure event.

25.10 Effect of Events of Force Majeure. Except as otherwise provided herein or may further be agreed between the Parties, either Party shall be excused from performance and neither Party shall be construed to be in default in respect of any obligations hereunder, for so long as failure to perform such obligations shall be due to an event of Force Majeure."

26.0 Transfer and Sub-Letting

The Supplier shall not sublet, transfer, assign or otherwise part with the Contract or any part thereof, either directly or indirectly, without prior written permission of the Purchaser.

27.0 Recoveries

When ever under this contract any money is recoverable from and payable by the bidder, the purchaser shall be entitled to recover such sum by appropriating in part or in whole by detecting any sum due to which any time thereafter may become due from the supplier in this or any other contract. Should the sum be not sufficient to cover the full amount recoverable the bidder shall pay to the purchaser on demand the remaining balance.

28.0 Waiver

Failure to enforce any condition herein contained shall not operate as a waiver of the condition itself or any subsequent breach thereof.

29.0 Indemnification

Notwithstanding contrary to anything contained in this RFQ, Supplier shall at his costs and risks make good any loss or damage to the property of the Purchaser and/or the other Supplier engaged by the Purchaser and/or the employees of the Purchaser and/or employees of the other Supplier engaged by the Purchaser whatsoever arising out of the negligence of the Supplier while performing the obligations under this contract.

30.0 Documentation:

The Bidder's shall procure all equipment from BRPL approved sources as per attached specifications. The Bidder's shall submit 5 copies of Material/ Type Test Certificates, O&M Manuals, and Approved & As-built drawings. The Bidder's shall ensure for the strict compliance to the specifications and Field Quality Procedures issued by BRPL Engineer in-charge.

31.0 Commissioning Spares

Commissioning Spares shall be deemed to be included in the quoted prices

32.0 LIMITATION ON LIABILITY

Notwithstanding anything to the contrary in the Purchase Order but subject to clause 33 Consequential Damages, the aggregate liability of either Party to the other Party in respect of all claims for Liabilities arising under the Purchase Order shall not exceed the aggregate value of the Purchase Order(s) under which the Liabilities arose except that such limitation shall not apply to the Contractor's indemnification obligations in accordance with clause 29 Indemnification herein.

33.0 CONSEQUENTIAL DAMAGES

Notwithstanding anything to the contrary in the Purchase Order, except for breach of obligations under Non-disclosure and except as expressly provided in a Purchase Order, in no event, as a result of breach of contract or breach of warranty or otherwise, shall either Party hereto or either Party's Affiliates or sub Contractors, be liable under the Purchase Order to the other Party for any consequential, special, indirect, exemplary or incidental damages, and/or for any lost profits, goodwill or revenues of such Party, howsoever arising, before or after Acceptance of the Goods and whether or not such damages are foreseeable.

SECTION V

PRICE FORMAT – SUPPLY

Sl no	Description	Qty	UOM	Basic (Rs)	Freight (Rs)	GST (Rs)	Unit Landed (Rs)	Total Landed Cost

								(Rs)
1	PNL,ELEC PWR,INDR INCOMER;33KV	4	NOS					
2	PNL,ELEC PWR,INDR OG FDR;33KV (Trafo)	2	NOS					
3	PNL,ELEC PWR,INDR BUS CPLR;33KV	1	NOS					
4	PNL,ELEC PWR,INDR BUS PT;33KV	1	NOS					
5	PNL,ELEC PWR,INDR BUS PT;33KV (Along with Bus Riser)	1	NOS					
6	33/11KV 31.5 MVA Power Transformer including NIFPS	2	NOS					
7	TRANSFORMER,400KVA,11KV/433V,OIL TYPE	1	NO					
8	48V Ni-Cd Battery bank	1	SET					
9	Battery charger with DCDB	1	NOS					
10	ACDB , with 2 incomers	1	SET					
11	11kV APFC 4 Stage, 7.2 MVAR capacitor bank with motorized isolator	2	SETS					
12	SCADA RTU	1	SET					
13	11kV VCB switchgear with numerical protective relays(as per Tender SLD)- Incoming	2	NOS					
14	11kV VCB switchgear with numerical protective relays(as per Tender SLD)- Bus coupler	1	NOS					
15	11kV VCB switchgear with numerical protective relays(as per Tender SLD)- outgoing	20	NOS					
16	11kV VCB switchgear with numerical protective relays(as per Tender SLD)- Capacitor (7.2 MVAR)	2	NOS					
17	11kV VCB switchgear with numerical protective relays(as per Tender SLD)- stn Xmer	1	NOS					
18	11kV VCB switchgear Bus PT with riser with numerical protective relays(as per SLD)	1	NOS					
19	11kV VCB switchgear Bus PT Panel with numerical protective relays(as per SLD)	1	NOS					
20	Earthing trucks for 11KV Panels -Bus Earthing Truck	1	NOS					
21	Earthing trucks for 11KV Panels -Cable Earthing Truck	2	NOS					
22	Grounding and earthing of entire substation including earthing of transformer fence and capacitor bank	1	SET					
23	High mast lighting 16M	2	NOS					
24	Indoor LED lighting system including emergency lighting	1	LOT					
25	Air conditioning with timer for complete substation building except Toilet and Pantry	1	LOT					
26	Exhaust and Ventilation for Toilet, Pantry and Cable Celler	1	LOT					
27	Fire detection and alarm system for building	1	LOT					
28	Building and outdoor lightning protection system	1	LOT					
29	Control cables							
29a	6CX4Sqmm	1500	MTR					
29b	6CX2.5Sqmm	2500	MTR					
29c	10CX2.5Sqmm	2000	MTR					
30	LT power cable including terminations and Glands							
30a	2CX2.5Sqmm	250	MTR					
30b	2CX10Sqmm	800	MTR					
30c	4CX300Sqmm	300	MTR					
30d	4CX10Sqmm	800	MTR					

30e	4CX50Sqmm	500	MTR					
30f	4CX25Sqmm	500	MTR					
31	11kV Power cable termination kits along with Glands qty							
31a	11KV 3CX400Sqmm I/D cable termination	10	NOS					
31b	11KV 3CX400Sqmm O/D cable termination	2	NOS					
31c	11KV 1CX1000Sqmm I/D cable termination	36	NOS					
32	33KV End Term Kit 3CX400SQMM	8	NOS					
33	Connectors and Clamps	1	LOT					
34	Cable trays as per requirement	1	LOT					
35	Cabling between equipments and RTU as per requirement	1	LOT					
36	Control Cable Terminations and Glands as per requirement	1	LOT					
37	Fire Extinguisher as per spec	1	LOT					
38	Outdoor LED Lighting including street lighting with poles as per spec	1	LOT					
39	Line current differential relay for remote location as per spec	4	NOS					
40	MTR,ENERGY,3P4W,1A,PREMIER 300	29	NOS					
41	CCTV /VMS	1	SET					
42	Cable entry sealing as per requirement	1	LOT					
43	Fire Suppression System of 11KV Panels	1	LOT					
44	11KV Bus Duct	1	LOT					
45	IT Requirements as per spec/BOQ	1	LOT					

BOQ shall be read in conjunction with the Tender Document & General Design Criteria

Appendix- I

COMMERCIAL TERMS AND CONDITIONS - SUPPLY

Sl No	Item Description	AS PER BRPL	BIDDER'S CONFIRMATION
1	Validity	120 days from the due date of submission or amended due date of submission	
2	Price basis	a) **Firm**, FOR Delhi store basis. Prices shall be inclusive of all taxes & duties, freight up to Delhi stores. b)Unloading at stores - in vendor's scope c) Transit insurance in Bidder scope	
3	Payment terms	a. 10% advance against submission of BG of equivalent amount valid upto completion period/handing over, whichever is earlier plus 3 months claim period. In case of delay, the BG shall be extended suitably. b. 75 % against R/A bills within 30 days against receipt of material at site. c. 10% pro-rata after installation/ erection of equipment d. 5% pro-rata after completion of successful acceptance testing, commissioning and Handing Over of the entire Installation and duly certified by BRPL Project-in-charge and submission of BG of 10% of contract value valid up to Defect Liability period i.e. 24 months from the date of Handing over of entire Installation Plus 3 months towards Claim period	
4	Completion time	10 months from date of LOI/ Order	
5	Defect Liability period	24 months from the date of Handing over of entire Installation.	
6	Liquidated damages	0.5% of total price for every week delay subject to maximum of 10% of total contract value	
7	Contract Performance Bank Guarantee	10% (Ten precent) of the Contract Price valid up to completion period/handing over.	
8	Performance Bank Guarantee	10% (Ten percent) of the Contract Price valid up to Defect Liability Period plus 3 months towards claim period.	

SECTION VI

GENERAL TERMS & CONDITIONS - ERECTION, TESTING & COMMISSIONING

1.0 DEFINITIONS and INTERPRETATION

The following terms shall have the following meanings:

1.1 "Company": means BSES Rajdhani Power Ltd, a company incorporated under the Companies Act 1956 and having its office at BSES Bhawan, Nehru Place, New Delhi 110 019, which expression shall include its authorized representatives, agents, successors and assigns.

1.2 "Contractor": shall mean the successful Tenderer/ vendor to whom the contract has been awarded

1.3 "Rate": The unit rates for the work to be carried out at site shall be as per finalized unit rates through tender. The finalized rates shall be firm for the entire duration of work to be carried out by the Contractor under the work order and are not subject to escalation for any reason whatsoever.

1.4. CONTRACT SPECIFICATION: The terms "CONTRACT Specification" shall mean the Technical specification of the work as agreed by you and description of work as detailed in Annexure-I enclosed herewith and all such particulars mentioned directly/ referred to or implied as such in the contract.

1.5 SITE: The terms "Site" shall mean the working location in BRPL area. Under this tender, working location shall be as mentioned elsewhere.

1.6 ENGINEER IN CHARGE: "Engineer In-charge" means the Company's authorized representative for the purpose of carrying out the work.

2.0 EXAMINATION OF SITE AND LOCAL CONDITIONS:

The contractor is deemed to have visited the site of the work and ascertained therefore all site conditions and information pertaining to his work. The company shall not accept any claim whatsoever arising out of the difficult site/ terrain/ local conditions, if any.

3.0 LANGUAGE AND MEASUREMENT:

The CONTRACT issued to the contractor by the company and all correspondence and documents relating to the CONTRACT placed on the Contractor shall be written in English language.

Metric System shall be followed for all dimension, units etc.

4.0 SCOPE OF WORK:

The scope includes survey, design, engineering, manufacture, shop testing, inspection, packing, dispatch, loading, unloading and storage at site, storage and construction insurance, assembly, erection, structural, complete pre-commissioning checks, testing and commissioning at site, obtaining statutory clearance & certification from state electrical inspector, Municipal Corporation department, Fire Officer, Horticulture department and handing over to owner after successful testing & commissioning of 33/11 kV AIS Substation at Kasturba Nagar, New Delhi, BRPL on single point responsibility basis. Schedule of work shall be as per BOQ attached herewith.

After completion of E/T/C work of the scheme, contractor has to obtain the Electrical Inspectorate's Clearance from the Electrical Inspector of Delhi Govt. Electrical Inspector Clearance fees shall be in Bidder's scope. The related fees, payments and pursuance work shall be in scope of Bidder only.
Bidder shall arrange any permission like road cutting clearance etc from the Delhi Civic authorities. The Bidder shall follow-up with local authorities and other connected persons that may be required to carry out the job under this work order.

All the labour, cranes, tool and tackles, and technical supervision etc. are including in your scope of work. Adequate number of engineers, supervisors and labourers shall be posted at site and the list of the same along with certificate of Qualification of technical staff should be submitted by the Contractor to the Engineer In Charge for checking the adequacy immediately (within seven days) after award of contract.

The Contractor shall also make his own arrangement for the accommodation/conveyance requirements for its staff at site. Company will be provided at site the adequate open space for contractor's site store for storing the materials, tools, tackles etc. The entire Contractor's storage will be within the site premises. All the incoming and outgoing materials, equipment, tools, tackles and any other items related to said work shall be entered into the register kept for this purpose and shall be in the custody of Contractor, however company does not hold any responsibility for any loss or damage of Contractor's material etc.

All loading/ unloading, of materials at work-site shall be Bidder's responsibility. Involvement of Crane/ Hydra/ Tractor/ Trailer for this type of work shall be in your scope. Adequate weather protection shall be provided by the contractor to keep the materials safe from sun & rain by providing covered storage space as well as using tarpaulins.

The contractor at his own shall arrange Water and Electricity Power at his cost.

Special Instruction:-

a. All Erection tools and tackles and testing equipment shall be available with contractor in event of order.

b. Penalty clause shall be incorporated in case any of workmen of contractor is found violating safety protocol as per BRPL WO.

Any additional work beyond the scope enumerated in the work order above shall be carried out as per the instructions of Engineer-In Charge. The company shall not entertain any claim or increase in the Work Order value due to execution of such additional work if the same is not approved by Engineer in Charge.

5.0 RATES:

The rates finalized for this order shall be firm for the entire duration of work carried out by the Contractor under the order and are not subject to any variation and escalation for any reason whatsoever.

The cost of insurance during loading/unloading of materials/ equipments during its storage and handling/erection at site for installation is included in the Bidder's scope and value shall be included in the unit rates finalized.

The unit rates finalized is also inclusive of barricading and watch & ward during execution and no separate charges shall be paid for the same.

6.0 TAXES AND DUTIES:

Prices are inclusive of all taxes and duties including GST as applicable. However, IT as per applicable rate will be deducted from your bills as Tax Deduction at Source (TDS).

The total order value shall remain **FIRM** within stipulated delivery period and shall not be adjusted on account of any price increase/variations in labour. However Statutory Taxes, duties and Levies imposed by Competent Authorities by way of fresh notification(s) within the stipulated delivery period shall be borne by BRPL on submission of necessary documents claiming such variation. The variation will be applicable only on such value wherever price breakup of same is submitted by vendor/ available in PO/ WO.

7.0 TERMS OF PAYMENT (Erection, Testing & Commissioning)

Payment shall be made as under:

(i) 10% mobilization advance against submission of Advance Bank Guarantee of equivalent amount valid up to completion period/ handing over, whichever is earlier plus 3 months claim period. In case of delay, the BG shall be extended suitably.

ii) 75% pro-rata of total installation value shall be payable against R/A bills payable within 45 days after installation/ erection of material at site duly certified by Engineer in charge.

iii) 10% pro-rata of total installation value shall be payable against R/A bills payable within 30 days after testing & commissioning of material at site.

iv) 5% of contract value payable after completion of successful acceptance testing, commissioning and handing over of complete systems duly certified by Engineer in charge, submission of Electrical Inspector Clearance Certificate & submission of Performance Bank Guarantee of 10% of contract value valid up to defect liability period i.e. 24 months from the date of Handing over of entire Installation Plus 3 months towards Claim period.

All the Bank guarantees shall be submitted as per Company's format (Appendix I) and from any scheduled Bank approved by Company.

Company shall make payments of the bills either; By crossed cheque or by electronic transfer directly to Contractor's designated bank account.

8.0 GUARANTEE OF PERFORMANCE

The bidder shall stand guarantee that the equipment and material supplied/service or work rendered under the contract is free from design, manufacturing, material, construction, erection & installation and workmanship & quality defects and is capable of its due, rated and intended quality performance, as an integrated product delivered under the contract for a specific period termed as Guarantee Period. The bidder should also guarantee that the equipment/material is new and unused except for the usage required for the tests and checks required as part of quality assurance.

9.0 GUARANTEE PERIOD/ DEFECT LIABILITY PERIOD:

The Guarantee Period will be equipment/ service/ work specific and shall be as specified in the Technical Specifications for the equipment/ material/ service/ work and where Technical specifications are not part of contract documents or guarantee period is not specified in the Technical specifications, the guarantee period shall be as per the Special Terms and Conditions of the Contract. In case of no mention of the guarantee period in Technical specifications, Defect liability period will be 24 Months from the Date of Commissioning or 30 months from the date of delivery of final lot of supplies made, whichever is later.

If during the defects liability period any materials/ items are found to be defective, these shall be replaced or rectified by the bidder at his own cost within 30 days from the date of receipt of intimation.

10.0 PERFORMANCE GUARANTEE

10.01 Bank guarantee shall be drawn in favour of "BSES Rajdhani Power Ltd" as applicable. The performance Bank guarantee shall be in the format as specified by BRPL.

10.02 Contract performance bank guarantee of total 10% of the contract price shall be submitted within 15 days of award of contract with the validity till completion of the contract period.

10.03 Contractor shall submit the performance bank guarantee equivalent to the 10% of the contract value at the time of claiming the last payment as per clause no. 7.0 (iii) (TERMS OF PAYMENT (Erection, Testing & Commissioning)), with the validity of the bank guarantee till Defect Liability Period i.e. 24 months from the date of Handing over of entire Installation plus 3 months.

11.0 COMPLETION PERIOD

You are required to mobilize your manpower and Tools & Tackles and furnish a list of equipments to be used for erection and commence the execution activity as per instructions of Engineer In-charge. The entire Erection, Testing & Commissioning work should be completed within 10 months from the date of issue of LOI/WO. The detailed schedule and milestone completion dates would be as per the contract schedules given from time to time by Engineer In-charge at site. You shall submit a weekly progress report to Engineer In charge.

12.0 CLEANLINESS

All debris shall be removed and disposed of at assigned areas on daily basis. Surplus excavated earth shall be disposed of in an approved manner. In short, you shall be fully responsible for keeping the work site clean at all times. In case of non- compliance, company shall get the same done at Contractor's risk and costs.

13.0 COMMISSIONING & ACCEPTANCE TEST

After completion of the work, the Contractor shall conduct trial run/ operation in the presence of Engineer In charge. During such trial run the system shall be operated under the supervision of the Contractor. If any rectification/modification required during this period the Contractor shall do all necessary measures.
On satisfactory completion of above, the system shall be deemed to have energized and placed in commercial operation. The Engineer-In-Charge will issue an acceptance certificate.

14.0 WORK COMPLETION CERTIFICATION, HANDING OVER

The work carried out by the Contractor under this order has to be certified by Engineer In-charge for satisfactory completion of work allotted to the contractor with respect to specifications / Field Quality Procedures as per applicable standards. In case of modification/correction to be carried out, contractor shall carry out the said modifications/correction without additional cost. The Contractor shall remain in close contact with Engineer In-Charge at site to report the general findings of the fieldwork during the initial as well as later stage of the work at site.

The contractor shall be solely responsible for any shortage or damage of materials issued to them handling of and / or in storage and erection at site and cost of the same will be recovered from the contractor as certified by Engineer In-Charge. Contractor must submit a periodical material reconciliation statement in the approval format with every Running Bill raise by him or end of every month whichever is earlier. The contractor shall maintain an accurate and exhaustive record detailing out the list of all items received by him for the purpose of erection and keep such record open for the inspection of the company.

15.0 PENALTY AND LIQUIDATED DAMAGES

15.1 Penalty: A penalty of 2.5% of bill amount shall be levied in each case of non-compliance of safety practices and site cleanliness.

15.2 Liquidated Damages: In the event of any delay in completion of the work beyond the stipulated time given by in order due to reasons solely attributable to the Contractor, the Contractor shall pay to the Company liquidated damages.

If the Contractor failed perform the services within the time period specified in the order, the Company shall, without prejudice to its other remedies under the contract, deduct liquidated damages a sum equivalent to 0.5 % of the total

order value for each week or part there of delay until the actual date of completion up to a maximum deduction of 10% of total order value. The levy payment or deduction of such damages shall not relieve the Contractor from his obligation to complete the Works on time or from any other part of his obligation and liabilities under the Contract. Once the maximum is reached, the Company reserves the right for termination of contract without any liabilities to the Company.

In the event of an extension of time being granted by the EIC, in writing for the Completion of the works, this clause shall be applicable after the expiry of such an extended period.

Engineer In charge should specifically mention the amount of LD levied on the bill of contractor.

16.0 SAFETY REGULATIONS & SAFETY CODE

The Contractor shall indemnify the Company from any consequence arising due to contractor's failure in respect to safety compliance.

First Aid facilities at easily accessible place shall be provided by the Contractor at their own cost as per provisions of Labour act or as advised by the Company wherever works are carried out.

All critical injuries shall be reported promptly to the Company. The report shall cover type, nature, cause, physician's report and actions for prevention of those types again.

To ensure effective enforcement of the rules and regulations relating to safety precautions, arrangements made by the Contractor shall be open to inspection by the Company.

The cost so incurred by the Contractor in providing for safety standards and requirements as above shall be deemed to be included in the rates quoted for various items under the scope of Contract and no extra amounts shall be payable to the contractor on this account.

The Contractor shall furnish to the Company within seven days from issue of Work Order whichever is earlier, for approval of Company, the proposed safety program on how it intends to implement the safety procedures and precautions to ensure that the site is accident free.

The Contractor shall ensure adequate safety precautions at site as required under the law of the land and shall be entirely responsible for the complete safety of their workman as well as other workers at site and premises. The contractor shall not deploy any worker below the age of 18 years.

The contractor shall observe the safety requirements as laid down in the contract and in case of sub-contract (only after written approval of company), it shall be the responsibility of main contractor that all safety requirements are followed by the employees and staff of the sub-contractor.

The contractor employing two hundred employees or more, including contract workers, shall have a safety coordinator in order to ensure the implementation of safety requirements of the contract and a contractor with lesser number of employees, including contract workers, shall nominate one of his employees to act as safety coordinator who shall liaise with the safety officer on matters relating to safety and his name shall be displayed on the notice board at a prominent place at the work site.
The contractor shall be responsible for non-compliance of the safety measures, implications, injuries, fatalities and compensation arising out of such situations or incidents.

In case of any accident, the contractor shall immediately submit a statement of the same to the owner and the safety officer, containing the details of the accident, any injury or causalities, extent of properly damage and remedial action taken to prevent recurrence and in addition, the contractor shall submit a monthly statement of the accidents to the owner at the end of each month.

17.0 STATUTORY OBLIGATIONS

The Contractor shall take all steps as may be necessary to comply with the various applicable laws/rules including the provisions of contract labour (Regulation & Abolition Act) 1970 as amended, minimum wages Act, 1984, Workman Compensation Act, ESI Act, PF Act, Bonus Act and all other applicable laws and rules framed there under including any statutory approval required from the Central/State Govt. Ministry of Labour. Broadly, the compliance shall be as detailed below, but not limited to:

a) An Electrical license issued by Govt. of Delhi.
b) PF Code No. and all employees to have PF A/c No. under PF every Act, 1952.
c) All employees to have a temporary or permanent ESI Card as per ESI Act.
d) ESI Registration No.
e) PAN No.
f) Work Contract Tax Registration Number/ GSTN Registration.
g) Labour License under Contract Labour Act (R & A) Act 1970

(The Contractor shall provide BRPL Engineer-in-charge a copy of Labour License responsible for execution of the job before start of the work.)

The Contractor must follow:

a) Third party Insurance Policy before start of work.
b) To follow Minimum Wages Act prevailing in the state.
c) Salary / Wages to be distributed in presence of representative of Company's representative not later than 7th of each month.
d) To maintain Wage- cum - Attendance Register.
e) To maintain First Aid Box at Site.
f) Latest P.F. and E.S.I. challans pertaining to the period in which work was undertaken along with a certificate mentioning that P.F. and E.S.I. applicable to all the employees has been deducted and deposited with the Authorities within the time limits specified under the respective Acts.
g) Workman Compensation Policy. {If applicable}
h) Labour license before start of work. {If applicable}

18.0 WORKMAN COMPENSATION

The Contactor shall take insurance policy under the Workman Compensation Act to cover such workers who are not covered under ESI and PF by the Contractor however engaged to undertake the jobs covered under this order and a copy of this insurance policy will be given to Company for reference and records. This insurance policy shall be kept valid at all times. In case there are no worker involve other than those who are covered under ESI and PF by the Contractor, the Contractor shall certify for the same.

The contractor shall keep the company indemnified at all times, against all claims of compensation under the provision of Workmen Compensation Act 1923 and as amended from time to time or any compensation payable under any other law for the time being workman engaged by the contractor/ sub-contractor/ sub-agent in carrying out the job involved under this work order and against costs and expenses, if any, incurred by the company in connection therewith and without prejudice to make any recovery.

The company shall be entitled to deduct from any money due to or to become due to the Contractor, moneys paid or payable by way of compensation as aforesaid or cost or expenses in connection with any claims thereto and the Contractor shall abide by the decision of the Company as to the sum payable by the Contractor under the provisions of this clause.

19.0 STAFF AND WORKMAN

(I) It shall be responsibility of contractor

(a) To obtain Contract Labour License from the concerned authorities and maintain proper liaison with them. Necessary Forms for obtaining Labour License would be issued by the company. However you will bear all expenses for obtaining Labour license and registration in PF Department for your scope of work. You will deposit PF of your staff/labourer each month and all related documents should be furnished to us.

(b) To obtain workman insurance cover against deployment of workers etc.

(II) To maintain, proper records relating to workmen employed, in the form of various Registers, namely,

(a) Register of workmen.
(b) Register of muster roll.
(c) Register of overtime.
(d) Register of wages.
(e) Any other register as per latest amendment Labour Act.

The records shall be in the prescribed formats only.

(III) To disburse monthly wages to your workers/ supervisors in time and in the presence of Company representatives or as directed by the Labour authorities.

(IV) To maintain proper liaison with the Project authorities, local police and all other government and local bodies.

(V) To pay your workmen at least not less than the minimum prescribed wages as per state/Central Labour laws as may be, applicable. The contractor shall, be responsible for compliance of all the provisions of minimum Wages Act, PF, ESIC Act workmen Compensation Act and Contract Labour Regulation & Abolition Act the rules made there under. In case of non- compliance of the statutory requirements, the company would take necessary action at the risk and cost of the Contractor.

(VI) To employ required number of skilled/semi-skilled and unskilled workmen as per site requirement to complete the entire project as per schedule. To provide safety shoes, safety helmets, safety belts, gloves etc. to your worker/staff as per requirement during erection work.

(VII) To employ necessary engineering and supervisory staff for completion of the Project in time. While day-to-day management of the site and supervision of the works shall be the responsibility of your Engineer - In charge, he will report to the Engineer in charge to assist him to discharge the overall responsibility of the execution of the project.

20.0 INSURANCE

a) THIRD PARTY INSURANCE

Before commencing the execution of the work the contractor shall take third party insurance policy at his own cost to insure against any damage or loss or injury which may occur to any property/ public property or to any person or any employee or representative of any outside Agency/ the company engaged or not engaged for the work of the company, by or arising out of the execution of the work or temporary work or in carrying out of this Agreement. For third party insurance policies, the contractor shall be responsible for settlement of claims with the underwriters without any liability on the purchaser/ owner and will arrange replacements/ rectification expeditiously without awaiting settlement by insurance claim at contractors own cost.

b) ACCIDENTAL INSURANCE POLICY FOR LIFE COVER:

Before commencing the execution of the work, the CONTRACTOR shall take Accidental insurance policy for the staff engaged by him for this work to insure against any loss of life which may occur during the contract for the work of the COMPANY. The policy shall have coverage of Rs. 10 Lacs (Table C- Death + Permanent Total Disability + Partial permanent Disability due to external accidents). The Contractor shall be responsible for on the spot same day claim settlement with the victim's legal heirs without waiting for settlement by insurance claim without any liability on BRPL. The premium amount for such life cover policy shall be borne by the contractor. The contractor shall furnish copy of policy when demanded by BRPL.

c) INSURANCE FOR MAN, MATERIAL & MACHINERY DEPLOYED AT SITE:

Contractor shall be responsible for the insurance for his own man, material and machinery deployed at site for the package awarded. Contractor shall furnish the copy of this insurance policy to the purchaser, prior start of work.

21.0 SECURITY

Adequate number of trained Security Guards shall be deployed both at the storage yard and stores as well as places of work to prevent theft and pilferage of material and accessories and various other materials. All security rules and safety rules enforced at site by company shall be strictly observed.

22.0 ENVIRONMENTAL, HEALTH & SAFETY PLAN

Contractor will make ensure that the Environment, Health & Safety (EHS) requirements are clearly understood and faithfully implemented at all levels at site as per instruction of Company. Contractors must comply with these requirements:

a) Comply with all of the elements of the EHS Plan and any regulations applicable to the work

b) Comply with the procedures provided in the interests of Environment, Health and Safety

c) Ensure that all of their employees designated to work are properly trained and competent

d) Ensure that all plant and equipment they bring on to site has been inspected and serviced in accordance with legal requirement and manufacturer's or suppliers' instructions

e) Make arrangements to ensure that all employees designated to work on or visit the site present themselves for site induction prior to commencement of work

f) Provide details of any hazardous substances to be brought onsite

g) Ensure that a responsible person accompanies any of their visitors to site

All contractors staff are accountable for the following:

1. Use the correct tools and equipment for the job and use safety equipment and protective clothing supplied, e.g. helmets, goggles, ear protection, etc. as instructed
2. Keep tools in good condition
3. Report to the Supervisor any unsafe or unhealthy condition or any defects in plant or equipment
4. Develop a concern for safety for themselves and for others
5. Prohibit horseplay
6. Not to operate any item of plant unless they have been specifically trained and are authorized to do so.

23.0 TEST CERTIFICATE & QUALITY ASSURANCE

The Contractor shall procure all equipment from genuine sources as approved by the Company and as per Company specifications. The Contractor shall submit all the test certificates and joint inspection reports related to major equipment wherever applicable. The contractor shall ensure for the strict compliance to the specifications and Field Quality Procedures issued by company/ Engineer in-charge.

24.0 SUB-CONTRACTING/ SUBLETTING

CONTRACTOR shall not assign or transfer the whole or any part of this Work Order or any other benefits accruing there from nor shall it subcontract/ sublet the whole or any part of the Works without the prior written consent of COMPANY.

In the event the contractor assigns this work order, contractor's assignees shall be bound by the terms and conditions of this work order and shall, if deemed necessary by COMPANY at the time of such assignment, undertake in writing to be so bound by this Work Order.

Notwithstanding the subletting/ subcontracting of any portion of the works, contractor shall remain wholly responsible for the carrying out, completion and satisfactory execution of Works in all respects in accordance with this Work Order, specification, approved drawings and data sheets.

25.0 INDEMNITY

Contractor shall indemnify and save harmless COMPANY against and from any and all liabilities, claims, damages, losses or expenses arising due to or resulting from:

A. Any breach non-observance or non-performance by contractor or its employees or agents of any of the provisions of this Work Order.
B. Any act or omission of contractor or its employees or agents.
C. Any negligence or breach of duty on the part of contractor, its employees or agents including any wrongful use by it or them of any property or goods belonging to or by COMPANY or any other third party at site including adjoining neighbours.

Contractor shall at all times indemnify COMPANY against all liabilities to other persons, including the employees or agents of COMPANY or contractor for bodily injury, damage to property or other loss which may arise out of or in consequence of the execution or completion of Works and against all costs charges and expenses that may be occasioned to COMPANY by the claims of such person.

26.0 EVENTS OF DEFAULTS

COMPANY may, without prejudice to any of its other rights or remedies under the Work Order or in law, terminate the whole or any part of this Work Order by giving written notice to the Contractor, if in the opinion of COMPANY, contractor has neglected to proceed with the works with due diligence or commits a breach of any of the provisions of this work order including but not limited to any of the following cases:

a) Failing to complete execution of work within the terms specified in this work order.
b) Failing to complete works in accordance with the approved schedule of works.
c) Failing to meet requirements of specifications, drawings, and designs as approved by COMPANY.
d) Failing to comply with any reasonable instructions or orders issued by COMPANY in connection with the works.
e) Failing to comply with any of the terms or conditions of this work order.

In the event COMPANY terminates this work order, in whole or in part, on the occurrence of any event of default, COMPANY reserves the right to engage any other subcontractor or agency to complete the work or any part thereof, and in addition to any other right COMPANY may have under this work order or in law including without limitation the right to

penalize for delay under clause 15.0 of this tender, the contractor shall be liable to COMPANY for any additional costs that may be incurred by COMPANY for the execution of the Work.

27.0 RISK & COST

If the Contractor of fails to execute the work as per specification / as per the direction of Engineer's In-change within the scheduled period and even after the extended period, the contract shall got cancel and company reserves the right to get the work executed from any other source at the Risk & Cost of the Contractor. The Extra Expenditure so incurred shall be debited to the Contractor.

28.0 ARBITRATION

To the best of their ability, the parties hereto shall endeavour to resolve amicably between themselves all disputes arising in connection with this LOA. If the same remain unresolved within thirty (30) days of the matter being raised by either party, either party may refer the dispute for settlement by arbitration. The arbitration is to be undertaken by two arbitrators, one each to be appointed by either party. The arbitrators appointed by both the parties shall mutually nominate a person to act as presiding arbitrator before entering upon the reference in the event of a difference between the two arbitrators and the award of the said presiding arbitrator in such a contingency shall be conducted in accordance with this provisions of the Indian Arbitration & Conciliation Act, 1996 and the venue of such arbitration shall be in the city of New Delhi only.

29.0 FORCE MAJEURE

29.1 General:

An "Event of Force Majeure" shall mean any event or circumstance not within the reasonable control, of the Party affected, but only if and to the extent that:

(i) Such event or circumstance, despite the exercise of reasonable diligence, could not have been prevented, avoided or reasonably foreseen by such Party;

(ii) Such event or circumstance materially and adversely affects the ability of the affected Party to perform its obligations under this Contract, and the affected Party has taken all reasonable precautions, due care and reasonable alternative measures in order to prevent or avoid the effect of such event on the affected parties ability to perform its obligations under this Contract and to mitigate the consequences thereof. For the avoidance of doubt, if such event or circumstance would not have materially and adversely affected the performance of the affected party had such affected party followed good industry practice, such event or circumstance shall not constitute force majeure.

(iii) Such event is not the direct or indirect result of the failure of such Party to perform any of its obligations under this Contract; and

(iv) Such Party has given the other Party prompt notice describing such events, the effect thereof and the actions being taken in order to comply with above clause

29.2 Specific Events of Force Majeure:

Subject to the provisions of above clause, Events of Force Majeure shall include only the following to the extent that they or their consequences satisfy the above requirements:

The following events and circumstances:

a) Effect of any natural element or other acts of God, including but not limited to storm, flood, earthquake, lightning, cyclone, landslides or other natural disasters, and

b) Explosions or fires

c) Declaration of the Site as war zone.

d) Any order, regulation, directive, requirement from any Governmental, legislative, executive or judicial authority.

29.3 Notice of Events of Force Majeure:

If a force majeure event prevents a party from performing any obligations under the Contract in part or in full, that party shall:

(i) Immediately notify the other party in writing of the force majeure events within 2 working days of the occurrence of the force majeure event

(ii) Be entitled to suspend performance of the obligation under the Contract which is affected by force majeure event for the duration of the force majeure event

(iii) Use all reasonable efforts to resume full performance of the obligation as soon as practicable

(iv) Keep the other party informed of all such efforts to resume full performance of the obligation on a regular basis

(v) Provide prompt notice of the resumption of full performance or obligation to the other party.

29.4 Mitigation of events of force majeure:

The Contractor shall:

(i) Make all reasonable efforts to prevent and reduce to a minimum and mitigate the effect of any delay occasioned by an Event of Force Majeure, including applying other ways in which to perform the Contract;

(ii) Use its best efforts to ensure resumption of normal performance after the termination of any Event of Force Majeure and shall perform its obligations to the maximum extent practicable as agreed between the Parties; and Keep the Company informed at regular intervals of the circumstances concerning the event of Force Majeure, with best estimates as to its likely continuation and what measures or contingency planning it is taking to mitigate and or terminate the Event of Force Majeure.

29.5 Burden of proof:

In the event that the Parties are unable in good faith to agree that a Force Majeure event has occurred to an affected party, the parties shall resolve their dispute in accordance with the provisions of this Contract. The burden of proof as to whether or not a force majeure event has occurred shall be upon the party claiming that the force majeure event has occurred and that it is the affected party.

29.6 Terminations for certain events of force majeure:

If any obligation of any Party under the Contract is or is reasonably expected to be delayed or prevented by a Force Majeure event for a continuous period of more than 1 (one) month during the Term of the Contract the Contract shall be terminated at the discretion of the Company and neither Party shall be liable to the other for any consequences arising on account of such termination.

30.0 SECRECY CLAUSE

The technical information, drawing and other related documents forming part of work order and the information obtained during the course of investigation under this work order shall be the Company's executive property and shall not be used for any other purpose except for the execution of the work order. The technical information drawing, records and other document shall not be copied, transferred, or divulged and/ or disclosed to third party in full/part, not misused in any form whatsoever except to the extent for the execution of this work order.

This technical information, drawing and other related documents shall be returned to the Company with all approved copies and duplicates including drawing/plans as are prepared by the Contractor during the executions of this work order, if any, immediately after they have been used for agreed purpose.

In the event of any breach of this provision, the contractor shall indemnify the Company against any loss, cost or damage or claim by any party in respect of such breach.

31.0 TERMINATION

"During the course of the execution, if at any time BRPL observe and form an opinion that the work under the order is not being performed in accordance with the terms of this Agreement, BRPL reserves its right to cancel this Agreement giving 15 days notice mentioning the reason for the termination of the agreement and BRPL will recover all damages including losses occurred due to loss of time from Contractor.

32.0 QUALITY

Contractor shall ensure that strict quality is maintained and execution of works under the Work Order and Works are executed in conformity with the Specification.

All tools, tackles, instruments and other equipments used in the execution of the Works shall be duly calibrated as required and Contractor shall maintain proper records of such tools, tackles, instruments and / or equipment.

33.0 LIABILITY OF CONTRACTORS

Subject to the due discharge of its obligations under the Contract and except in case of gross negligence or wilful misconduct on the part of the Contractor or on the part of any person acting on behalf of the Contractor, with respect to any loss or damage caused by the Contractor to the Employer's property or the Site, the Contractors shall not be liable to the Employer for the following:

a) For any indirect or consequential loss or damage; and

b) For any direct loss or damage that exceeds:

(i) The total payments made and expected to be made to the Contractor under the Contract including reimbursements, if any; or
(ii) The insurance claim proceeds which the Contractor may be entitled to receive from any insurance purchased by the Contractor to cover such a liability, whichever is higher.

This limitation of liability shall not affect the Contractor's liability, if any, for damage to any third party, caused by the Contractor or any Person or firm acting on behalf of the Contractor in executing the Works.
Notwithstanding anything contained in the Contract, the Contractor shall not be liable for any gross negligence or wilful misconduct on the part of the Employer or any of its affiliates, any Contractor, or any party, other than Contractor and/or, its directors, officers, agents or representatives or its affiliates, or Subcontractor, or the Contractor or any third party engaged by it.

Notwithstanding anything contained in the Contract, including but not limited to approval by the Employer of any drawings, documents, Contractor list, supply of information or data or the participation of the Employer in any meeting

and/or discussion or otherwise, shall not absolve the Contractor from any of its liabilities or responsibilities arising in relation to or under the Contract.

SECTION VII

PRICE FORMAT – ERECTION, TESTING & COMMISSIONING

S.No	Item Description	Qty	UOM	Basic	GST	Unit	Total

				(Rs)	(Rs)	Landed (Rs)	Landed Cost (Rs)
1	ETC of 33/11KV 31.5 MVA Power Transformer including NIFPS	2	SET				
2	ETC OF 33kV VCB switchgear with numerical protective relays(as per SLD)						
2a	33kV VCB switchgear with numerical protective relays(as per Tender SLD)- Incoming	4	SET				
2b	33kV VCB switchgear with numerical protective relays(as per Tender SLD)- Bus coupler	1	SET				
2c	33kV VCB switchgear with numerical protective relays(as per Tender SLD)- outgoing	2	SET				
2d	33kV VCB switchgear Bus PT with riser with numerical protective relays(as per SLD)	1	SET				
2e	33kV VCB switchgear Bus PT Panel with numerical protective relays(as per SLD)	1	SET				
3	ETC of Station Aux Transformer 11/0.433kV 400kVA	1	NOS				
4	ETC OF 48V Ni-Cd Battery bank	1	LOT				
5	ETC OF DCDB with battery charger	1	NOS				
6	ETC OF ACDB	1	NOS				
7	ETC OF 11kV APFC 4 Stage, 7.2 MVAR capacitor bank with motorized isolator	2	SETS				
8	ETC OF SCADA RTU	1	SET				
9	ETC OF 11kV VCB switchgear with numerical protective relays(as per SLD)						
9a	11kV VCB switchgear with numerical protective relays(as per Tender SLD)- Incoming	2	SET				
9b	11kV VCB switchgear with numerical protective relays(as per Tender SLD)- Bus coupler	1	SET				
9c	11kV VCB switchgear with numerical protective relays(as per Tender SLD)- outgoing	20	SET				
9d	11kV VCB switchgear with numerical protective relays(as per Tender SLD)- Capacitor (7.2 MVAR)	2	SET				
9e	11kV VCB switchgear with numerical protective relays(as per Tender SLD)- Station Transformer	1	SET				
9f	11kV VCB switchgear Bus PT with riser with numerical protective relays(as per SLD)	1	SET				
9g	11kV VCB switchgear Bus PT Panel with numerical protective relays(as per SLD)	1	SET				
9h	ETC of Earthing trucks for 11kV Panels- Bus Earthing Truck	1	SET				
9i	ETC of Earthing trucks for 11kV Panels- Cable Earthing Truck	2	SET				
10	ETC of Grounding and earthing of entire substation including earthing of transformer fence and capacitor bank fence	1	SET				
11	ETC of high mast lighting 16M	2	NOS				
12	Installation of Indoor LED lighting system including emergency lighting	1	LOT				
13	Installation of Air conditioning for complete substation building except Toilet and Pantry	1	LOT				
14	Installation of Exhaust and Ventilation for Toilet and Pantry	1	LOT				
15	Installation of Building and outdoor lightning protection system	1	LOT				

16	Laying, testing & termination of Control cables along with lugs & glands						
16a	6CX4Sqmm	1500	MTR				
16b	6CX2.5Sqmm	2500	MTR				
16c	10CX2.5Sqmm	2000	MTR				
17	Laying, testing & termination of LT Power cables along with lugs & glands						
17a	2CX2.5Sqmm	250	MTR				
17b	2CX10Sqmm	800	MTR				
17c	4CX300Sqmm	300	MTR				
17d	4CX10Sqmm	800	MTR				
17e	4CX50Sqmm	500	MTR				
17f	4CX25Sqmm	500	MTR				
18	ITC of 11kV Power cable termination kits along with Glands						
18a	11KV 3CX400Sqmm I/D cable termination	10	NOS				
18b	11KV 3CX400Sqmm O/D cable termination	2	NOS				
18c	11KV 1CX1000Sqmm I/D cable termination	36	NOS				
19	ITC of 33KV End Term Kit 3CX400SQMM	8	NOS				
20	ETC OF Fire detection and alarm system for building	1	LOT				
21	Installation of Spacers, Connectors etc	1	LOT				
22	Installation of Cable trays as per spec	1	LOT				
23	Laying, testing & termination of all Cabling between equipments and RTU including glanding	1	LOT				
24	Installation of Fire Extinguisher as per spec	1	LOT				
25	Laying, testing , termination of Outdoor LED Lighting including street lighting with poles as per spec	1	LOT				
26	ETC OF Line current differential relay and accessories for remote location	4	NOS				
27	ETC of MTR,ENERGY,3P4W,1A,PREMIER 300	29	NOS				
28	I/T/C of Video Surveillance system as per spec	1	SET				
29	Installation of Cable entry sealing as per reqmt	1	LOT				
30	Installation of Cable Mounting Structure for 11 kV Cables from Transformer including civil work	2	SET				
31	Installation of Cable Mounting Structure for 33kV Cables from Transformer including civil work	2	SET				
32	Installation of Fire Suppression System of 11KV Panels	1	LOT				
33	ETC of 11KV Bus Duct	1	LOT				
34	ETC of IT Requirements as per BOQ	1	LOT				
35	Inspection and Training of BRPL Executives (As per Specs)	1	LOT				

Appendix-II

COMMERCIAL TERMS AND CONDITIONS – E/T/C

Sl No	Item Description	AS PER BRPL	BIDDER'S CONFIRMATION
1	Validity	120 days from the due date of submission or amended due date of submission	
2	Price basis	**Firm**. Prices shall be inclusive of all taxes & duties.	
3	Payment terms	a) 10% mobilization advance against submission of Advance Bank Guarantee of equivalent amount valid upto completion period/ handing over, whichever is earlier plus 3 months claim period. In case of delay, the BG shall be extended suitably. b) 75% pro-rata of total installation value shall be payable against R/A bills payable within 45 days after installation/erection of material at site duly certified by Engineer in charge. c) 10% pro-rata of total installation value shall be payable against R/A bills payable within 30 days after testing & commissioning of material at site duly certified by Engineer in charge. d) 5% of contract value payable after completion of successful acceptance testing, commissioning and handing over of complete systems duly certified by Engineer in charge, submission of Electrical Inspector Clearance Certificate & submission of Bank Guarantee of 10% of contract value valid up to defect liability period i.e. 24 months from the date of Handing over of entire Installation Plus 3 months towards Claim period.	
4	Completion time	10 months from date of LOI/Order	
5	Defect Liability period	24 months from the date of Handing over of entire Installation.	
6	Liquidated damages	0.5 % of the order value for each week or part there of delay until the actual date of completion up to a maximum deduction of 10% of total order value	
7	Contract Performance Bank Guarantee	10% (Ten percent) of the Contract Price valid up to completion period/handing over.	
8	Performance Bank Guarantee	10% (Ten percent) of the Contract Price valid up to Defect Liability Period i.e. 24 months from the date of Handing over of entire Installation plus 3 months towards claim period.	

SECTION VIII

GENERAL TERMS & CONDITIONS – CIVIL WORKS

1.0 DEFINITIONS

The following terms shall have the meaning hereby assigned to them except where the context otherwise requires:

a. "Company" shall mean BSES Rajdhani Power Limited, having its office at BSES Bhawan, Nehru Place, New Delhi – 110019 and shall include its authorized representatives, agents, successors and assigns.

b. "Engineer in Charge" (EIC) shall be the person authorized by the Company or from time to time duly appointed by the Company for the purpose of the contract.

c. "Contractor" shall mean the successful Tenderer/ vendor to whom the contract has been awarded.

d. "Sub-Contractor" shall mean the persons, firm or company to whom any part of the contract has been sublet by the Contractor with the prior written consent of the Company.

e. "Contract" shall mean and include the general terms and conditions, technical specifications, drawings, priced bill of quantities, schedule of rates and prices, if any, tender, Company's letter of intent, the work order and any correspondence letters concerned to the tender, when completed.

f. Site, shall mean the actual place in over or under which, permanent works or temporary works is to be executed by the Contractor.

g. "Contract Price" shall mean the sum named in the letter of acceptance, subject to such additions thereto and/or deductions there from as may be made under the provisions hereinafter contained.

h. "Specifications" shall mean specification referred to in the tender and any modification thereof or addition thereto as may, from time to time be instructed by the Company/ the Structural Consultant.

i. "Approved" shall mean approved in writing by Company including subsequent written confirmation of previous verbal approval and "approval" means approval in writing by Company, including as aforesaid.

j. "Defect Liability Period" shall mean the period during which the contractor shall remain liable for repair or replacement of any defective part of the work performed under the contract, free of cost.

2.0 EXAMINATION OF SITE AND LOCAL CONDITIONS

The contractor is deemed to have visited the site of the work under the Tender and ascertained therefore all site conditions and information pertaining to his work. Before submitting the bid, all bidders will at their expenses make or obtain any additional information, investigations, explorations, test and studies and obtain any additional information and data which pertains to the physical conditions at or contiguous to the site or otherwise which may affect cost, progress, performance of the work and which the bidder deems necessary to determine its Bid for performing the work in accordance with the time and other terms and conditions of the tender/ contract documents. The company shall not entertain any claim whatsoever arising out of the difficult site/ terrain/ local conditions, if any.

3.0 LANGUAGE AND MEASUREMENT

The Tender issued to the contractor by the company and all correspondence and documents relating to the Tender placed on the Contractor shall be written in English language. Metric System shall be followed for all dimension, units etc., the mode of measurement shall be as per IS 1200.

4.0 SCOPE OF WORK:

The scope of work shall be civil works of 33/11KV AIS Grid Substation at Kasturba Nagar, New Delhi, including all statutory clearances & certification from State Electrical Inspector, Municipal corporation department, Fire officer, Horticulture department, various local bodies like RWA. Schedule of work shall be as mentioned in the Bill of quantity attached herewith.

All the Labour, plant appliance, ladder, scaffoldings, materials, tool, tackles etc are included in contractor's scope of work. Adequate number of engineers, supervisors and skilled and unskilled Labours shall be posted at site.

The Contractor shall also make his own arrangement for the accommodation/ conveyance requirements for its staff at site.

Company will provide at site the adequate open space for setting up contractor's site store for storing the materials, tools, tackles etc. The entire Contractor's storage will be within the site premises. All the incoming and outgoing materials, equipment, tools, tackles and any other items related to said work shall be entered into the register kept for this purpose and shall be in the custody of Contractor, however company does not hold any responsibility for any loss or damage of Contractor's material etc.

All loading/ unloading, of materials at work-site shall be your responsibility. Involvement of Crane/ Hydra/ Tractor/ Trailer for this type of work shall be in your scope.

Adequate weather protection shall be provided by the contractor to keep the materials safe from sun & rain by providing covered storage space as well as using tarpaulins.

Water and Electricity Power shall be arranged by the Contractor at his own. The cost of insurance during loading/ unloading of materials/ equipments during its storage and handling/erection at site for installation is included in the contractor's scope and value is including in the above mentioned Tender value. The unit rates mentioned in annexure is inclusive of barricading and watch & ward during execution and no separate charges shall be paid for the same.

5.0 VALUE OF THE ORDER

The rates finalized for this order shall be firm for the entire duration of work carried out by the Contractor under the order and are not subject to any variation and escalation for any reason whatsoever. The rates quoted for each item/work in the BOQ shall be deemed to include and cover all cost, expenses and liabilities to every description and all risk of every kind to be taken in executing, completing and handing over the work to the satisfaction of the Company.

The Contractor shall on his own and at his own expense obtain all necessary permits and permissions to execute the job, including required registrations, agent's etc. to perform its obligation under this Contract and shall indemnify the Company in all related matters.

6.0 TAXES & DUTIES

Prices are inclusive of all taxes, duties, Construction Cess etc. leviable by State or Central Government or local bodies including any duties which may be levied by the Govt. during currency of this order. GST as applicable shall be paid on submission of GST Registration and self declaration on your letter head stating that you have deposited/or will deposit the Tax as per the applicable GST laws.

However, IT as per applicable rate will be deducted from your bills as Tax Deduction at Source (TDS).
The total order value shall remain FIRM within stipulated delivery period and shall not be adjusted on account of any price increase/ variations in labour & materials. However Statutory Taxes, duties and Levies imposed by Competent Authorities by way of fresh notification(s) within the stipulated delivery period shall be borne by BRPL on submission of necessary documents claiming such variation.

7.0 TERMS OF PAYMENT

Payment shall be made to you as under:

a) 10% of total civil works value shall be payable as advance against submission of Bank Guarantee of equivalent amount valid up to completion date plus 3 (three) months towards claim period. The advance shall be adjusted against R/A Bills.

b) 80% pro-rata of total civil works value shall be payable against progressive R/A bills payable within 30 days duly certified by Engineer-In-Charge after completion.

c) 10% of total civil works value shall be payable after completion against submission of Bank Guarantee of equivalent amount valid up to Defect liability period plus 3 (three) months towards claim period.

The Contractor shall submit the final bill along with duly checked final measurements and completion certificate towards the successful completion of the Contract as certified by the EIC**.**

Payment of final bill shall not be considered conclusive evidence as to the sufficiency of any work or materials, to which it relates, nor shall it relieve as to the sufficiency of work or materials which it relates, nor shall it relieve the Contractor from his liabilities arising from any defects, which become apparent during the Defects Liability Period.

8.0 DEFECT LIABILITY PERIOD

The civil works shall be guaranteed against any defect or failure which may arise due to faulty materials, design or workmanship for a period of 24 months from the date of handing over of the substation. In case any defect in the work is observed during the defect liability period, the same shall be rectified by the Contractor at own cost including supply of all materials, labour, equipments and any other appliance in this regards (as per prevailing rates) for the fulfilment of all obligations under the Contract and to the satisfaction of the Company, with in 10 day s from the date of receipt of intimation from BRPL.

Under no circumstances any extra claim in terms of time and cost shall be entertained for such repair/ rectification.

9.0 SCHEDULE OF COMPLETION AND PERIOD OF MOBILISATION

The time schedule for carrying out this work and period for mobilization shall be as under:

9.1 The Contractor shall mobilize their Plants & Equipments, Tools & Tackles, Work Labour Force, project team including Engineering Staff and materials required for execution of work at site for commencement of work immediately on receipt of the order.

9.2 The entire work under this order as indicated in the scope of work shall be carried out and completed within the validity period i.e. 300 days. A detailed L2 Schedule shall be submitted by the contractor within 15 days of WO. The contractor shall plan parallel working (round the clock working) for completion of work as per schedule and mobilize manpower accordingly.

9.3 Progress Review Meeting between the Contractor and the Engineer In charge shall be held at site at least once in a week. Also the report giving the details of the manpower engaged at site and the details of the major job completion shall be submitted to Engineer In charge.

9.4 The above time schedule must be strictly adhered to and improved upon wherever possible. In the event we find that your work is not progressing in quality or time frame as per above agreed schedule and to our satisfaction, we reserve the right to withdraw the work in whole or in part without further notice and liability of the Company.

9.5 The completion of the work shall have to be certified by Engineer In charge.

9.6 In order to maintain the time schedule, if necessary the Contractor shall carry out the work on all Sunday & Holiday except National Holiday with prior written permission from Engineer-in- Charge.

9.7 Contractor shall arrange any permission like for the Road cutting etc. from the local authorities like DDA, PWD, and DJB. Contractor shall also follow up with local authorities and other connected persons that may be required to carry out the job under this order. All Statutory charges and direct fees except Electrical Inspector Clearance fees shall be borne by BRPL.

10.0 TEST CERTIFICATE & QUALITY ASSURANCE

Quality Assurance Program:

The Contractor before the start of work shall submit for approval a quality assurance program to the EIC indicating measures that he proposes to implement to ensure that the quality of work shall be in accordance with requirements, specifications laid down in the Contract. The Contractor shall strictly adhere to this program and any failure attributable to the Contractor shall attract the penal provisions determined by the EIC.

Quality of materials and workmanship and tests:

The Contractor shall procure all equipment from genius sources as approved by the Company & as per Company specifications. Cement shall be of grade 43 ordinary port land cement conforming to IS 8112/53 grade O.P.C. conforming to IS 12269, aggregate for cement concrete shall confirm to IS 383, reinforcement for cold twisted bars shall confirm to IS 1786, the bricks for brick work shall correspond to IS 1077, Structural steel shall confirm to relevant IS code, water to be used shall comply with requirement of IS 456. Contractor shall provide all requisite facilities for field tests and laboratory tests shall be carried out in the laboratory having ISO 9001-2000 Certified Testing Lab for which no extra payment shall be made. The Contractor shall maintain mandatory Test Register with Engineer-in-Charge as provided in latest Indian Standard Specifications.

All materials and workmanship shall be of the respective kinds described in the Contract and in accordance with the Engineer-in-Charge's instructions and shall be subjected from time to time to such tests as the Engineer-in-Charge may direct at the place of manufacture or fabrication or on the site or at such other places as may be specified in the Contract, or at all or any of such places. The Contractor shall provide at no additional cost to the Company such assistance, instruments, machines, labour and materials as are normally required for examining, measuring and testing any work and the quality, weight or quantity of any material used and shall supply samples of materials before incorporation in the works for testing as may be selected and required by the EIC.

Cost of samples and tests:

All samples shall be supplied to Company if required by the Contractor at his own cost. The Contractor shall take approval of the EIC prior to start the work for all samples of materials including mix design of concrete to be utilized for the works to be executed. The mix design of concrete, testing of reinforcement steel and structural steel shall be carried out by an external agency approved by the Company. The cost of all such tests carried out by the external agencies or consultants shall be borne by the Contractor at his own cost and are deemed to be included in the unit rates quoted in the BOQ.

Sampling and Testing Concrete on Site

The Contractor can also have cubes tested in an approved laboratory in lieu of a testing machine at site but at his own cost and with the prior written consent of the Company.

Inspection of operations:

The Engineer-in-Charge/QC department or any person authorized by them shall at all times have access to the works and to all workshops and places where work is being prepared or from where materials, manufactured articles or machinery are being obtained for the works and the Contractor shall afford every facility for and every assistance in or in obtaining the right to such access.

Examination of work before covering up:

No work shall be covered up or put out of view without the approval of the EIC or his representative and the Contractor shall afford full opportunity to the EIC or his representative to examine and measure any work which is about to be covered up or put out of view and to examine foundations before permanent work is placed thereon. The Contractor shall give due notice to the EIC or his representative whenever any such work or foundations is or are ready or about to be ready for examination and the EIC or his representative shall, without unreasonable delay, unless he considers it unnecessary, attend for the purpose of the examining such foundations.

11.0 SUB-CONTRACTING/ SUBLETTING

CONTRACTOR shall not assign or transfer the whole or any part of this Work Order or any other benefits accruing there from nor shall it subcontract/ sublet the whole or any part of the Works without the prior written consent of COMPANY. The Company may approve or reject sub-contractor, which in his opinion do not meet the prerequisite qualifications. The Contractor shall re-submit a fresh name for approval.

In the event the contractor assigns this work order, contractor's assignees shall be bound by the terms and conditions of this work order and shall , if deemed necessary by COMPANY at the time of such assignment, undertake in writing to be so bound by this Work Order. Notwithstanding the subletting/ subcontracting of any portion of the works, contractor shall remain wholly responsible for the carrying out, completion and satisfactory execution of Works in all respects in accordance with this Work Order, specification, approved drawings and data sheets.

12.0 INDEMNITY

Contractor shall indemnify and save harmless COMPANY against and from any and all liabilities, claims, damages, losses or expenses arising due to or resulting from:

a) Any breach non-observance or non-performance by contractor or its employees or agents of any of the provisions of this Work Order.

b) Any act or omission of contractor or its employees or agents.

c) Any negligence or breach of duty on the part of contractor, its employees or agents including any wrongful use by it or them of any property or goods belonging to or by COMPANY or any other third party at site including adjoining neighbours.

Contractor shall at all times indemnify COMPANY against all liabilities to other persons, including the employees or agents of COMPANY or contractor for bodily injury, damage to property or other loss which may arise out of or in consequence of the execution or completion of Works and against all costs charges and expenses that may be occasioned to COMPANY by the claims of such person.

13.0 EVENTS OF DEFAULTS

COMPANY may, without prejudice to any of its other rights or remedies under the Work Order or in law, terminate the whole or any part of this Work Order by giving written notice to the Contractor, if in the opinion of COMPANY, contractor has neglected to proceed with the works with due diligence or commits a breach of any of the provisions of this work order including but not limited to any of the following cases:

a) Failing to complete execution of work within the terms specified in this work order.

b) Failing to complete works in accordance with the approved schedule of works.
c) Failing to meet requirements of specifications, drawings, and designs as approved by COMPANY.
d) Failing to comply with any reasonable instructions or orders issued by COMPANY in connection with the works.
e) Failing to comply with any of the terms or conditions of this work order.

In the event COMPANY terminates this work order, in whole or in part, on the occurrence of any event of default, COMPANY reserves the right to engage any other subcontractor or agency to complete the work or any part thereof, and in addition to any other right COMPANY may have under this work order or in law including without limitation the right to penalize for delay under clause 17.0 of this tender, the contractor shall be liable to COMPANY for any additional costs that may be incurred by COMPANY for the execution of the Work.

14.0 RISK & COST

If the Contractor of fails to execute the work as per specification/ as per the direction of Engineer's In-change within the scheduled period and even after the extended period, the contract shall got cancel and company reserves the right to get the work executed from any other source at the Risk & Cost of the Contractor. The Extra Expenditure so incurred shall be debited to the Contractor.

15.0 ENVIRONMENTAL, HEALTH & SAFETY PLAN

Contractor will make ensure that the Environment, Health & Safety (EHS) requirements are clearly understood and faithfully implemented at all levels at site as per instruction of Company. Contractors must comply with these requirements:

a) Comply with all of the elements of the EHS Plan and any regulations applicable to the work

b) Comply with the procedures provided in the interests of Environment, Health and Safety

c) Ensure that all of their employees designated to work are properly trained and competent

d) Ensure that all plant and equipment they bring on to site has been inspected and serviced in accordance with legal requirement and manufacturer's or suppliers' instructions

e) Make arrangements to ensure that all employees designated to work on or visit the site present themselves for site induction prior to commencement of work

f) Provide details of any hazardous substances to be brought onsite

g) Ensure that a responsible person accompanies any of their visitors to site

All contractors' staffs are accountable for the following:

1. Use the correct tools and equipment for the job and use safety equipment and protective clothing supplied, e.g. helmets, goggles, ear protection, etc. as instructed
2. Keep tools in good condition
3. Report to the Supervisor any unsafe or unhealthy condition or any defects in plant or equipment
4. Develop a concern for safety for themselves and for others
5. Prohibit horseplay
6. Not to operate any item of plant unless they have been specifically trained and are authorized to do so.

16.0 WORK COMPLETION CERTIFICATION, HANDING OVER

The work carried out by the Contractor under this order has to be certified by Engineer In-charge for satisfactory completion of work allotted to the contractor with respect to specifications/ Field Quality Procedures as per applicable standards. In case of modification/ correction to be carried out, contractor shall carry out the said modifications/ correction without additional cost. The Contractor shall remain in close contact with Engineer In-Charge at site to report the general findings of the fieldwork during the initial as well as later stage of the work at site.

If required, field findings and for revision of the method for site work if required. Work Completion Certificate shall be issued by the Engineer In charge within 10 days of satisfactory work completion subject to handing over of clear site i/c removal of Labour accommodation, stores, storage arrangements for water, plants, tackles, scaffoldings, ladders, levelling at site. The Contractor shall give undertaking that all standing dues to Labour have been paid and all the statutory obligations have been met with. Completion certificate has to be submitted with the final bill issued by Engineer-in- Charge.

17.0 PENALTY AND LIQUIDATED DAMAGES

17.1 Penalty: A penalty of 2.5% of bill amount shall be levied in each case of non-compliance of safety practices and site cleanliness.

17.2 Liquidated Damages: In the event of any delay in completion of the work beyond the stipulated time given by in order due to reasons solely attributable to the Contractor, the Contractor shall pay to the Company liquidated damages.

If the Contractor failed to complete the construction of subject work within the time period specified in the order, the Company shall, without prejudice to its other remedies under the contract, deduct liquidated damages a sum equivalent to 0.5 % of the total order value for each week or part there of delay until the actual date of completion up to a maximum deduction of 10% of total order value. The levy payment or deduction of such damages shall not relieve the Contractor from his obligation to complete the Works on time or from any other part of his obligation and liabilities under the Contract. Once the maximum is reached, the Company reserves the right for termination of contract without any liabilities to the Company.

In the event of an extension of time being granted by the EIC, in writing for the Completion of the works, this clause shall be applicable after the expiry of such an extended period.

Engineer In charge should specifically mention the amount of LD levied on the bill of contractor.

18.0 SAFETY REGULATIONS

18.1 The Contractor shall indemnify the Company from any consequence arising due to contractor's failure in respect to safety compliance.

18.2 First Aid facilities at easily accessible place shall be provided by the Contractor at their own cost as per provisions of Labour act or as advised by the Company wherever works are carried out.

18.3 All critical injuries shall be reported promptly to the Company. The report shall cover type, nature, cause, physician's report and actions for prevention of those types again.

18.4 To ensure effective enforcement of the rules and regulations relating to safety precautions, arrangements made by the Contractor shall be open to inspection by the Company.

18.5 The cost so incurred by the Contractor in providing for safety standards and requirements as above shall be deemed to be included in the rates quoted for various items under the scope of Contract and no extra amounts shall be payable to the contractor on this account.

18.6 The Contractor shall furnish to the Company within seven days from issue of Work Order whichever is earlier, for approval of Company, the proposed safety program on how it intends to implement the safety procedures and precautions to ensure that the site is accident free.

19.0 SAFETY CODE

The Contractor shall ensure adequate safety precautions at site as required under the law of the land and shall be entirely responsible for the complete safety of their workman as well as other workers at site and premises. The contractor shall not deploy any worker below the age of 18 years.

The contractor shall observe the safety requirements as laid down in the contract and in case of sub-contract (only after written approval of company), it shall be the responsibility of main contractor that all safety requirements are followed by the employees and staff of the sub-contractor.

The contractor employing two hundred employees or more, including contract workers, shall have a safety coordinator in order to ensure the implementation of safety requirements of the contract and a contractor with lesser number of employees, including contract workers, shall nominate one of his employees to act as safety coordinator who shall liaise with the safety officer on matters relating to safety and his name shall be displayed on the notice board at a prominent place at the work site.

The contractor shall be responsible for non-compliance of the safety measures, implications, injuries, fatalities and compensation arising out of such situations or incidents.

In case of any accident, the contractor shall immediately submit a statement of the same to the owner and the safety officer, containing the details of the accident, any injury or causalities, extent of properly damage and remedial action taken to prevent recurrence and in addition, the contractor shall submit a monthly statement of the accidents to the owner at the end of each month.

20.0 STATUTORY OBLIGATIONS

The Contractor shall take all steps as may be necessary to comply with the various applicable laws/rules including the provisions of contract labour (Regulation & Abolition Act) 1970 as amended, minimum wages Act, 1984, Workman Compensation Act, ESI Act, PF Act, Bonus Act and all other applicable laws and rules framed there under including any statutory approval required from the Central/State Govt. Ministry of Labour. Broadly, the compliance shall be as detailed below, but not limited to:

a) An Electrical license issued by Govt. of Delhi.
b) PF Code No. and all employees to have PF A/c No. under PF every Act, 1952.
c) All employees to have a temporary or permanent ESI Card as per ESI Act.
d) ESI Registration No.
e) PAN No.
f) GSTN Registration.
g) Labour License under Contract Labour Act (R & A) Act 1970

(The Contractor shall provide BRPL Engineer-in-charge a copy of Labour License responsible for execution of the job before start of the work.)
The Contractor must follow:

a) Third party Insurance Policy before start of work.
b) To follow Minimum Wages Act prevailing in the state.

c) Salary/ Wages to be distributed in presence of representative of Company's representative not later than 7th of each month.
d) To maintain Wage- cum - Attendance Register.
e) To maintain First Aid Box at Site.
f) Latest P.F. and E.S.I. challans pertaining to the period in which work was undertaken along with a certificate mentioning that P.F. and E.S.I. applicable to all the employees has been deducted and deposited with the Authorities within the time limits specified under the respective Acts.
g) Workman Compensation Policy. {If applicable}
h) Labour license before start of work. {If applicable}
i) Group personnel accident insurance shall have coverage of Rs. 10 Lac (Table C- Death + Permanent Total Disability + Partial permanent Disability due to external accidents).

Before issue of order it would be mandatory for the Contractor to furnish the Company the permanent PF code no, ESI registration, registration under W.C.T Act.

21.0 BOCW ACT

BOCW Act applies to every establishment which employs, or had employed on any day of the preceding twelve months, ten or more building workers in any building or other construction work.

The Contractor for carrying out any construction work must get themselves registered with the Registering Officer under Section 7 of the Building and Other Construction Workers Act, 1996 and rules made thereto by the concerned State Govt. and submit certificate of Registration, issued from the Registering Officer of the concerned State Govt. (Labour Dept.). As per this Act, the Contractor shall be levied a cess @1% of cost of construction work, which would be deducted from each bill. Cost of material, when supplied under a separate schedule item, shall be outside the purview of cess. The Contractor shall also comply with all provisions of the said Act applicable to him.

22.0 WORKMAN COMPENSATION

The Contactor shall take insurance policy under the Workman Compensation Act to cover such workers who are not covered under ESI and PF by the Contractor however engaged to undertake the jobs covered under this order and a copy of this insurance policy will be given to Company for reference and records. This insurance policy shall be kept valid at all times. In case there are no workers involved other than those who are covered under ESI and PF by the Contractor, the Contractor shall certify for the same.

The contractor shall keep the company indemnified at all times, against all claims of compensation under the provision of Workmen Compensation Act 1923 and as amended from time to time or any compensation payable under any other law for the time being workman engaged by the contractor/ sub-contractor/ sub-agent in carrying out the job involved under this work order and against costs and expenses, if any, incurred by the company in connection therewith and without prejudice to make any recovery.

The company shall be entitled to deduct from any money due to or to become due to the Contractor, moneys paid or payable by way of compensation as aforesaid or cost or expenses in connection with any claims thereto and the Contractor shall abide by the decision of the Company as to the sum payable by the Contractor under the provisions of this clause.

23.0 INSURANCE

a) <u>THIRD PARTY INSURANCE</u>

Before commencing the execution of the work the contractor shall take third party insurance policy at his own cost to insure against any damage or loss or injury which may occur to any property/ public property or to any person or any employee or representative of any outside Agency/ the company engaged or not engaged for the work of the company, by or arising out of the execution of the work or temporary work or in carrying out of this Agreement. For third party insurance policies, the contractor shall be responsible for settlement of claims with the underwriters without any liability on the purchaser/ owner and will arrange replacements/ rectification expeditiously without awaiting settlement by insurance claim at contractors own cost.

b) ACCIDENTAL INSURANCE POLICY FOR LIFE COVER:

Before commencing the execution of the work, the CONTRACTOR shall take Accidental insurance policy for the staff engaged by him for this work to insure against any loss of life which may occur during the contract for the work of the COMPANY. The policy shall have coverage of Rs.10 Lacs (Table C- Death + Permanent Total Disability + Partial permanent Disability due to external accidents). The Contractor shall be responsible for on the spot same day claim settlement with the victim's legal heirs without waiting for settlement by insurance claim without any liability on BRPL. The premium amount for such life cover policy shall be borne by the contractor. The contractor shall furnish copy of policy when demanded by BRPL.

c) INSURANCE FOR MAN, MATERIAL & MACHINERY DEPLOYED AT SITE

Contractor shall be responsible for the insurance for his own man, material and machinery deployed at site for the package awarded. Contractor shall furnish the copy of this insurance policy to the purchaser, prior start of work.

24.0 ARBITRATION

To the best of their ability, the parties hereto shall endeavour to resolve amicably between themselves all disputes arising in connection with this LOA. If the same remain unresolved within thirty (30) days of the matter being raised by either party, either party may refer the dispute for settlement by arbitration. The arbitration is to be undertaken by two arbitrators, one each to be appointed by either party. The arbitrators appointed by both the parties shall mutually nominate a person to act as presiding arbitrator before entering upon the reference in the event of a difference between the two arbitrators and the award of the said presiding arbitrator in such a contingency shall be conducted in accordance with this provisions of the Indian Arbitration & Conciliation Act, 1996 and the venue of such arbitration shall be in the city of New Delhi only.

25.0 Performance Guarantee

Bank guarantee shall be drawn in favour of "BSES Rajdhani Power Ltd" as applicable. The performance Bank guarantee shall be in the format as specified by BRPL.

Contract performance bank guarantee of total 10% of the contract price shall be submitted for due performance of this Contract within 15 days of award of contract with the validity till completion of the contract period. The same shall be released after completion of the job

Contractor shall submit the performance bank guarantee equivalent to the 10% of the contract value at the time of claiming the last payment with the validity of the bank guarantee till Defect Liability Period i.e. 24 months from the date of Handing over of entire Installation plus 3 months.

The Company shall reserve the right to invoke the performance bond unconditionally and without recourse to the Contractor, if there is failure to perform any part of the Contract for whatsoever reason. This clause is pertaining to performance of contractual obligations and the decision of Company shall be final in this regard.

In the event, in Company's sole judgment, if the Contractor has fulfilled all its obligations under this Contract, Company shall release the performance bank guarantee without interest, within seven (7) days from the last date

up to which the performance bank guarantee is to be kept valid or if it is assessed by the Company that Contractor has not fulfilled its obligation, then the performance bank guarantee shall be extended by the Contractor till that period as requested by the Company.

26.0 GENERAL CONDITIONS

26.1) No idle labour charges will be admissible in the event of any suspension of work by the Company or stoppage caused in the work due to any other reason resulting in contractors' labour or equipments being rendered idle at any time during the duration of contract.

26.2) In the event of any ambiguity, the work order shall supersede LOI & all other correspondence and conditions of contract if furnished earlier.

26.3) If the Contractor needs to carry out any work or rework due to change in drawings or structural consultants instructions, the Contractor shall take the prior permission of the Company/ EIC before commencing such works. The Contractors quoted price shall include such rework or incidentals due to quantity variation, or methodology to carry out the works, wherever required and shall not be entitled for any extra payment or extension of time.

26.4) The Company reserves the right to claim and recover from the security deposit the damages/ losses incurred due to non-compliance to work, delay in the progress of work by the Contractor as agreed upon. The decision of the Company in this regard shall be final and binding.

26.5) The Contractor agrees to abide by other terms and conditions stipulated by the Company from time to time in addition to the above for the proper and satisfactory performance of their obligations under this Contract.

27.0 STAFF AND WORKMAN

(I) It shall be responsibility of contractor

(a) To obtain Contract Labour License from the concerned authorities and maintain proper liaison with them. Necessary Forms for obtaining Labour License would be issued by the company. However you will bear all expenses for obtaining Labour license and registration in PF Department for your scope of work. You will deposit PF of your staff/labourer each month and all related documents should be furnished to us.

b) To obtain workman insurance cover against deployment of workers etc.

(II) To maintain, proper records relating to workmen employed, in the form of various Registers, namely,

a) Register of workmen.
b) Register of muster roll.
c) Register of overtime.
d) Register of wages.
e) Any other register as per latest amendment Labour Act.

The records shall be in the prescribed formats only.

(III) To disburse monthly wages to your workers/ supervisors in time and in the presence of Company representatives or as directed by the Labour authorities.

(IV) To maintain proper liaison with the Project authorities, local police and all other government and local bodies.

(V) To pay your workmen at least not less than the minimum prescribed wages as per state/Central Labour laws as may be, applicable. The contractor shall, be responsible for compliance of all the provisions of minimum Wages Act, PF, ESIC Act workmen Compensation Act and Contract Labour Regulation & Abolition Act the rules made there under. In case of non-compliance of the statutory requirements, the company would take necessary action at the risk and cost of the Contractor.

(VI) To employ required number of skilled/semi-skilled and unskilled workmen as per site requirement to complete the entire project as per schedule. To provide safety shoes, safety helmets, safety belts, gloves etc. to your worker/staff as per requirement during erection work.

(VII) To employ necessary engineering and supervisory staff for completion of the Project in time. While day-to-day management of the site and supervision of the works shall be the responsibility of your Engineer - In charge, he will report to the Engineer in charge to assist him to discharge the overall responsibility of the execution of the project.

28.0 POLLUTION CONTROL

All debris shall be removed and disposed of at assigned areas on daily basis. Surplus excavated earth shall be disposed of in an approved manner. In short, the contractor shall be fully responsible for keeping the work site clean at all times. In case of non- compliance, company shall get the same done at Contractor's risk and costs.

All BRPL vendors and execution engineers are hereby advice to adhere below mentioned guidelines while carrying out any civil work including road/ pit digging, plinth/ fence making, road restoration etc.

I. No construction material/ debris shall be stored on metalled road.

II. Wind breakers of appropriate height on all sides of ear marked area using CGI sheets shall be raised to ensure that no construction material dust fly outside ear marked area.

III. The construction material i.e. coarse sand, stone aggregates, excavated earth, cement and any other material to and from the site shall be transported under wet and covered condition to ensure their non-slippage en-route to avoid air contamination.

IV. The contractor shall provide mask and helmet to every worker working on the construction site and involved in loading/unloading and carriage of construction material and construction debris to prevent inhalation of dust particles.

V. Over loading of vehicles shall be strictly prohibited

VI. The construction material at site shall be stored under wet and covered condition.

VII. The dumping sites for temporarily storing the excavated earth shall be properly levelled, watered and rehabilitated by plantation to avoid flying of dust.

VIII. The worker at the site shall be sensitized to adopt / observe the dust controlled measures in true spirit.

IX. If any C&D waste is generated at site the same will be transported to the C&D waste site only and the record for the same will be maintained by the agency.

X. Wet jet in grinding and stone cutting is being permitted at site.

XI. The necessary record for dust control is being maintained by the department on day to day basis and being monitored regularly.

The Contractor shall be responsible for all the preventive and protective environmental steps as per guidelines. Execution in- charge has to ensure all vendors comply with these instructions. Any violations from the above guidelines have been viewed very seriously by the authorities. Concerned agency is liable for the penalties / other action by the authorities, The Agency shall indemnify BRPL from all liabilities on this account.

29.0 FORCE MAJEURE

29.1 General:

An "Event of Force Majeure" shall mean any event or circumstance not within the reasonable control, of the Party affected, but only if and to the extent that:

(i) Such event or circumstance, despite the exercise of reasonable diligence, could not have been prevented, avoided or reasonably foreseen by such Party;

(ii) Such event or circumstance materially and adversely affects the ability of the affected Party to perform its obligations under this Contract, and the affected Party has taken all reasonable precautions, due care and reasonable alternative measures in order to prevent or avoid the effect of such event on the affected parties ability to perform its obligations under this Contract and to mitigate the consequences thereof. For the avoidance of doubt, if such event or circumstance would not have materially and adversely affected the performance of the affected party had such affected party followed good industry practice, such event or circumstance shall not constitute force majeure.

(iii) Such event is not the direct or indirect result of the failure of such Party to perform any of its obligations under this Contract; and

(iv) Such Party has given the other Party prompt notice describing such events, the effect thereof and the actions being taken in order to comply with above clause

29.2 Specific Events of Force Majeure:

Subject to the provisions of above clause, Events of Force Majeure shall include only the following to the extent that they or their consequences satisfy the above requirements:
The following events and circumstances:

e) Effect of any natural element or other acts of God, including but not limited to storm, flood, earthquake, lightning, cyclone, landslides or other natural disasters, and

f) Explosions or fires

g) Declaration of the Site as war zone.

h) Any order, regulation, directive, requirement from any Governmental, legislative, executive or judicial authority.

29.3 Notice of Events of Force Majeure

If a force majeure event prevents a party from performing any obligations under the Contract in part or in full, that party shall:

(i) Immediately notify the other party in writing of the force majeure events within 2 working days of the occurrence of the force majeure event

(ii) Be entitled to suspend performance of the obligation under the Contract which is affected by force majeure event for the duration of the force majeure event

(iii) Use all reasonable efforts to resume full performance of the obligation as soon as practicable

(iv) Keep the other party informed of all such efforts to resume full performance of the obligation on a regular basis

(v) Provide prompt notice of the resumption of full performance or obligation to the other party.

29.4 Mitigation of events of force majeure:

The Contractor shall:

(i) Make all reasonable efforts to prevent and reduce to a minimum and mitigate the effect of any delay occasioned by an Event of Force Majeure, including applying other ways in which to perform the Contract;

(ii) Use its best efforts to ensure resumption of normal performance after the termination of any Event of Force Majeure and shall perform its obligations to the maximum extent practicable as agreed between the Parties; and Keep the Company informed at regular intervals of the circumstances concerning the event of Force Majeure, with best estimates as to its likely continuation and what measures or contingency planning it is taking to mitigate and or terminate the Event of Force Majeure.

29.5 Burden of proof:

In the event that the Parties are unable in good faith to agree that a Force Majeure event has occurred to an affected party, the parties shall resolve their dispute in accordance with the provisions of this Contract. The burden of proof as to whether or not a force majeure event has occurred shall be upon the party claiming that the force majeure event has occurred and that it is the affected party.

29.6 Terminations for certain events of force majeure:

If any obligation of any Party under the Contract is or is reasonably expected to be delayed or prevented by a Force Majeure event for a continuous period of more than 1 (one) month during the Term of the Contract the Contract shall be terminated at the discretion of the Company and neither Party shall be liable to the other for any consequences arising on account of such termination.

30.0 SECRECY CLAUSE

The Contractor shall not communicate or use in advertising, publicity, sales release or in any medium photograph or reproduction of the works under this contract, or description of the site, dimensions, quantity or any other information concerning the works unless prior written permission is obtained from Company. The Contractor shall keep all the information obtained directly or indirectly through appointment of this contract confidential and shall not reveal the same to any other party without the prior written permission of the Company.

The technical information, drawing and other related documents forming part of work order and the information obtained during the course of investigation under this work order shall be the Company's executive property and shall not be used for any other purpose except for the execution of the work order. The technical information drawing, records and other document shall not be copied, transferred, or divulged and/ or disclosed to third party in full/part, not misused in any form whatsoever except to the extent for the execution of this work order.

This technical information, drawing and other related documents shall be returned to the Company with all approved copies and duplicates including drawing/plans as are prepared by the Contractor during the executions of this work order, if any, immediately after they have been used for agreed purpose.

In the event of any breach of this provision, the contractor shall indemnify the Company against any loss, cost or damage or claim by any party in respect of such breach.

31.0 APPROACHES:

The Contractor shall have to make his own arrangements for all approaches to the site required for transporting his men and material to site of work. The Company shall entertain no payment or claims on account of "Making of Approaches".

32.0 SITE LOCATION

The Contractor must see the site of the work, surrounding locality, local traffic rules, site approaches etc. carefully. No claim of any sort shall be entertained on account of any site conditions. If any approach from main road is required or existing approach is to be improved and maintained, for cartage of materials by the contractor, the same shall be provided, improved and maintained by him at his own cost.

33.0 CO-ORDINATION WITH OTHER AGENCIES

The Contractor shall execute the work in strict consultation with the Company and in co-ordination with other agencies appointed by the Company who will also simultaneously execute the components of work allotted to them.

The Contractor at his own cost shall also extend their site facilities, plant and equipments on written request of the Company/ EIC for use by other contractors appointed by the Company

34.0 TERMINATION OF CONTRACT

If in case the Contractor;

a) Becomes bankrupt or insolvent, has a receiving order issued against it compounds with its creditors, or if the Contractor is a corporation a resolution is passed or order is made for its winding up (other than a voluntary liquidation for the purposes of amalgamation or reconstruction) a receiver is appointed over any part of its undertaking or assets or if the Contractor takes or suffers any other analogous action in consequence of debt.

b) Assigns or transfers the Contract or any right or interest therein in violation of the provision of given work to sub-contractor.

c) In the judgment of the Company, has engaged in corrupt or fraudulent practices in competing for or in executing the Contract.

For the purpose of this Sub-clause

"Corrupt practice" means the offering, giving, receiving or soliciting of anything of value to influence the action of a public official in the procurement process or in Contract execution.

"Fraudulent practice" means misrepresentation of facts in order to influence a procurement process or the execution of a Contract detriment to Company and includes collusive practice among Tenderers (prior to or after bid submission) designed to establish bid prices at artificial non-competitive levels and to deprive the Purchaser of the benefits of free and open competition.

d) Has abandoned or repudiated the Contract

e) Has without valid reason failed to commence work on the Facilities promptly or has suspended days after receiving a written instruction from the Company to proceed.

f) Persistently fails to execute the Contract in accordance with the Contract or persistently neglects to carry out its obligations under the Contract without just cause.

g) Refuses or is unable to provide sufficient materials, services or labour to execute and complete the Facilities in the manner specified in the program furnished and at rate of progress that give reasonable assurance to the Company that the Contractor can attain completion of the Facilities by the time for completion.

The Company may, without prejudice to any other rights it may possess under the Contract, give a notice to the Contractor stating the nature of the default and requiring the Contractor to remedy the same. If the Contractor fails to remedy or to take steps to remedy the same within fourteen (14) days of its receipt of such notice the Company may terminate the Contract forthwith by giving a notice of termination to the Contractor.

In case, Contractor fails to carry out the work as specified in the schedule or left in between, it will be got done through any other agency at contractors' risk and cost, the same shall be recovered from the amount payable to the Contractor.

In case the Contractor fails to start work / to carry out the work within the specified period i.e. mutually agreed schedule and the work are not found to be satisfactory, the Company reserves the right to terminate the contract, at any stage without assigning any reasons thereof. In such case, the Company shall have the right to forfeit the entire / part amount of EMD / Security Deposit.

35.0 LIABILITY OF CONTRACTORS

Subject to the due discharge of its obligations under the Contract and except in case of gross negligence or wilful misconduct on the part of the Contractor or on the part of any person acting on behalf of the Contractor, with respect to any loss or damage caused by the Contractor to the Employer's property or the Site, the Contractors shall not be liable to the Employer for the following:

a) For any indirect or consequential loss or damage; and

b) For any direct loss or damage that exceeds:

(i) The total payments made and expected to be made to the Contractor under the Contract including reimbursements, if any; or
(ii) The insurance claim proceeds which the Contractor may be entitled to receive from any insurance purchased by the Contractor to cover such a liability, whichever is higher.

This limitation of liability shall not affect the Contractor's liability, if any, for damage to any third party, caused by the Contractor or any Person or firm acting on behalf of the Contractor in executing the Works.

Notwithstanding anything contained in the Contract, the Contractor shall not be liable for any gross negligence or wilful misconduct on the part of the Employer or any of its affiliates, any Contractor, or any party, other than Contractor and/or, its directors, officers, agents or representatives or its affiliates, or Subcontractor, or the Contractor or any third party engaged by it.

Notwithstanding anything contained in the Contract, including but not limited to approval by the Employer of any drawings, documents, Contractor list, supply of information or data or the participation of the Employer in any meeting and/or discussion or otherwise, shall not absolve the Contractor from any of its liabilities or responsibilities arising in relation to or under the Contract.

SECTION IX

PRICE FORMAT- CIVIL

SL. No.	Description	Qty	Unit	Basic (Rs)	GST (Rs)	Unit Landed (Rs)	Total Landed Cost (Rs)
1	Complete Design & Engineering of Grid Substation The building foundation shall be designed for Cellar/Ground floor, First floor + 1 additional floor for Future Planning. Including survey of Plot if required. i) Approval of architectural drawing - 10% ii) Approval of complete structural drawings - 40% iii) Approval of finishing drawings including door/window schedule - 20% iv) Approval plumbing/drainage/water-supply/RWH and other external development related drawings - 20% v) Submission of as built drawings - 10%	1	LS				
2	Substation building , RCC staircase for approach to roof as per layout and specification. In case of increase in length/width of building due to equipment dimension, the same shall be in scope of Vendor. No additional cost will be given. (Payment break up for Running Bill shall be as follows for this item only.) i) up to DPC -10% ii) Roof slab casting - cable-cellar/Ground Floor - 10% iii) Roof slab casting- First floor- 15% iv) Roof slab Casting - mumty roof - 10% v) Internal/ external finishing and terracing(Waterproofing of Top Roof) - 15% vi) Indoor trenches including supporting hangers & chequered plate- 5% vii) Flooring/painting/water supply & sanitary system- 15% viii) Doors, windows, staircase railing, etc- 10% ix) Final completion - 10%	1	LOT				
3	All Outdoor Control & Power cable trenches with trench covers including culverts for Road crossing (RCC slab or RCC cover), supporting hangers, etc as per specification and system requirement.	1	LOT				
4	Power transformer foundations including oil collection pit as per IS/IE/TAC & P/F MS grating over oil collection chamber around transformer foundation as per specification.	2	NOS				
5	RCC Fire wall between two transformers.	5	NOS				
6	RCC road inside substation as per layout and specification	1	LOT				
7	A)Outdoor Switchyard development (as per approved layout/ specification including any area which is earmarked for Future Development within Grid Boundary) - 90% B) Landscaping & Green belt development as per approved layout (including P/L GI/PVC pipes with hydrants at suitable intervals/locations for post maintenance of green belt).- 10%	1	LOT				
8	Underground water tank of 20000 Liter storage capacity with electrical (Booster) submersible pump of sufficient capacity and one outlet and hose, etc.	1	SET				
9	Rain water drainage arrangement within and outside switchyard, Rain water harvesting system (as per approved CGWB specification) & arrangement for sewerage system including Septic tank and soak pit, drinking water, sanitary system , etc.	1	LOT				
10	All foundations such as Equipment foundation, Capacitor	1	LOT				

	bank foundation, Auxiliary/ local transformer foundation, foundation of lighting poles, etc.						
11	Fencing with gate of Switchyard, Capacitor bank, Auxiliary/local transformer, etc as per IE/CBIP.	1	LOT				
12	BOT and pipe connection with electric motor for Burnt Oil tank as per IS/IE/TAC for NIFPS equipment along with NIFPS tank and pedestal.	1	LOT				
13	Supply of good earth (or other approved filling material) including filling in trenches, plinth, sides of foundations & in open areas up to required formation level in layers not exceeding 20 cm in depth, consolidating each deposited layer by raming & watering complete.	1	LOT				
14	Construction of permanent Security Gumtee (approx. Internal area of 9 SQM) with separate toilet for security guard and Parking shed is to be made as per standard approved drawing.	1	LOT				
Note:	**For detail description, kindly refer Technical Specification for Civil Work**						

Appendix-III

COMMERCIAL TERMS AND CONDITIONS – CIVIL

Sl No	Item Description	AS PER BRPL	BIDDER'S CONFIRMATION
1	Validity	120 days from the due date of submission or amended due date of submission	
2	Price basis	**Firm**. Prices shall be inclusive of all taxes & duties.	
3	Payment terms	a) 10% of total civil works value shall be payable as advance against submission of Bank Guarantee of equivalent amount valid up to completion date plus 3 (three) months towards claim period. The advance shall be adjusted against R/A Bills. b) 80% pro-rata of total civil works value shall be payable against progressive R/A biils payable within 30 days duly certified by Engineer-In-Charge after completion. c) 10% of total civil works value shall be payable after completion against submission of Bank Guarantee of equivalent amount valid upto Defect liability period plus 3 (three) months towards claim period.	
4	Completion time	10 months from date of LOI/Order	
5	Defect Liability period	24 months from the date of Handing over of entire Installation.	
6	Liquidated damages	0.5 % of the order value for each week or part there of delay until the actual date of completion up to a maximum deduction of 10% of total order value	
7	Contract Performance Bank Guarantee	10% (Ten percent) of the Contract Price valid up to completion period/handing over.	
8	Performance Bank Guarantee	10% (Ten percent) of the Contract Price valid up to Defect Liability Period i.e. 24 months from the date of Handing over of entire Installation plus 3 months towards claim period.	

SECTION X

GRAND SUMMARY OF THE QUOTED PRICE

Sr. Nos.	SCHEME DESCRIPTION	Total price for supply F.O.R site inclusive all duties taxes	Total for Erection, Testing & Commissioning inclusive all Taxes(INR)	Total for Civil Works inclusive all Taxes(INR)	Grand Total(INR)
1	Survey, Design, Supply, Erection, Installation, Testing, Commissioning, Handing over of 33/11kV Kasturba Nagar AIS Grid Substation				
TOTAL Package Cost					
In words :					

We declare that the following are our quoted prices in INR for the entire project/schemes.

Date: Bidder Name:

Place: Bidders Address:

Name & Signature …….

Designation: ……

Common Seal:…….

APPENDIX IV

BID FORM

BSES RAJDHANI POWER LIMITED

To

Head of Department
Contracts & Material Dept.
BSES Rajdhani Power Ltd
New Delhi 110019

Sir,

1 We understand that BRPL is desirous of execution of ……(Name of work)

2 Having examined the Bidding Documents for the above named works, we the undersigned, offer to deliver the goods in full conformity with the Terms and Conditions and technical specifications for the sum indicated in Price Bid or such other sums as may be determined in accordance with the terms and conditions of the contract .The above amounts are in accordance with the Price Schedules attached herewith and are made part of this bid.

3 If our Bid is accepted, we undertake to deliver the entire goods as) as per delivery schedule mentioned in Section IV from the date of award of purchase order/letter of intent.

4 If our Bid is accepted, we will furnish a performance bank guarantee for an amount of 10% (Ten)percent of the total contract value for due performance of the Contract in accordance with the Terms and Conditions.

5 We agree to abide by this Bid for a period of 120 days from the due date of bid submission & subsequent corrigendum/amendment/extension of due date of submission. It shall remain binding upon us and may be accepted at any time before the expiration of that period.

6 We declare that we have studied the provision of Indian Laws for supply of equipments/materials and the prices have been quoted accordingly.

7 Unless and until Letter of Intent is issued, this Bid, together with your written acceptance there of, shall constitute a binding contract between us.

8 We understand that you are not bound to accept the lowest, or any bid you may receive.

9 There is provision for Resolution of Disputes under this Contract, in accordance with the Laws and Jurisdiction of Contract.

Dated this..... day of..... 20…..

Signature..... In the capacity of

……duly authorized to sign for

and on behalf of

(IN BLOCK CAPITALS).....

Appendix V

ACCEPTANCE FORM FOR PARTICIPATION IN REVERSE AUCTION EVENT

(To be signed & stamped by the bidder along-with bid)

BSES Rajdhani Power Ltd (BRPL) intends to use reverse auction through SAP-SRM tool as an integral part of entire tendering process. All techno-commercially qualified bidders shall participate in the reverse auction.

The following terms and conditions are deemed as accepted by the bidder on participation in the bid:-

1. In case of bidding through Internet medium, bidders are advised to ensure availability of all associated infrastructure as required to participate in the reverse auction event. Inability to bid due to telephone glitch, internet response issues, software & hardware hangs/failures, power failures or any other reason shall not be the responsibility of BRPL.
2. In case bidder fails to participate in the reverse auction event due to any reason whatsoever, it shall be presumed that the bidder has no further discounts to offer and the initial bid submitted by them as a part of tender shall be considered as bidder's Final No Regret offer. Any off-line price bids received from a bidder in lieu of non-participation in the reverse auction event shall be rejected by BRPL.
3. The bidder is advised to understand the auto bid process t safeguard themselves against any possibility of non-participation in the reverse auction event.
4. The bidder shall be prepared with competitive price quotes during the day of reverse auction event.
5. The prices quoted by bidder in reverse auction event shall be on FOR Landed cost BRPL Store/site basis inclusive of all relevant taxes, duties, levies, transportation charges etc.
6. The prices submitted by the bidder during reverse auction event shall be binding on the Bidder.

7. The bidder agrees to non-disclosure of trade information regarding bid details e.g. purchase, Identity, bid process/technology, bid documentation etc.

8. BRPL will make every effort to make the bid process transparent. However award decision of BRPL will be final and binding on the bidder.

9. The prices submitted during reverse auction event shall be binding on the bidder.

10. No request for Time extension of the reverse auction event shall be considered by BRPL.

11. BRPL shall provide the user id and password to the authorized representative of the bidder. Authorization letter in lieu of the same shall be submitted along with the signed and stamped acceptance form.

12. The original price bids of the bidders shall be reduced on pro-rata basis against each line item based on the final all inclusive prices offered during conclusion of the reverse auction event for arriving at contract amount

APPENDIX VI

FORMAT FOR EMD BANK GUARANTEE

(To be issued in a Non Judicial Stamp Paper of Rs.50/-purchased in the name of the bank)

Whereas [*name of the Bidder*] (herein after called the "Bidder") has submitted its bid dated [*date of submission of bid*] for the supply of [*name and/or description of the goods*] (here after called the "Bid").

KNOW ALL PEOPLE by these presents that WE [name of bank] at [*Branch Name and address*],having our registered office at[*address of the registered office of the bank*](herein after called the "Bank"),are bound unto BSES Rajdhani Power Ltd., with it's Corporate Office at BSES Bhawan Nehru Place, New Delhi -110019 ,(herein after called —the "Purchaser")in the sum of Rs. ……/- (Rupees …….. only) for which payment well and truly to be made to the said Purchaser, the Bank binds itself, its successors, and assigns by these presents.

Sealed with the Common Seal of the said Bank this_____ day of_____ 20____.

THE CONDITIONS of this obligation are:

1 If the Bidder withdraws its Bid during the period of bid validity specified by the Bidder on the Bid Form ; or

2. If the Bidder, having been notified of the acceptance of its Bid by the Purchaser during the period of bid validity:
   (a) Fails or refuses to execute the Contract Form, if required; or
   (b) Fails or refuses to furnish the performance security, In accordance with the Instructions to Bidders/ Terms and Conditions;

We undertake to pay to the Purchaser up to the above amount upon receipt of its first written demand, without the Purchaser having to substantiate its demand, provided that is its demand the purchaser will note that amount claimed by it is due to it, owing to the occurrence of one or both of the two condition(s), specifying the occurred condition or condition(s).

This guarantee will remain in force up to and including One Hundred Twenty (120) days after the due date of submission bid, and any demand in respect thereof should reach the Bank not later than the above date.

(Stamp & signature of the bank)

Signature of the witness

APPENDIX - VII

LITIGATION HISTORY

Year	Name of client	Details of contract & date	Cause of Litigation/ arbitration and dispute	Disputed amount

APPENDIX - VIII

CURRENT CONTRACT COMMITMENTS/ WORK IN PROGRESS

Year	Name of client	Details of contract & date	Value of outstanding work	Estimated completion date

APPENDIX - IX

FINANCIAL DATA

(Duly Certified by Chartered Accountant)

	FY 21-22	FY 22-23	FY 23-24
Total assets			
Current assets			
Total Liability			
Current Liability			
Profit before taxes			
Profit after taxes			
Sales Turnover			

APPENDIX X

CHECK LIST

Sl No	Description	Compliance
1	INDEX	YES/NO
2	COVERING LETTER	YES/NO
3	BID FORM (UNPRICED) DULY SIGNED	YES/NO
4	BILL OF MATERIAL (UNPRICED)	YES/NO
5	DOCUMENTS IN SUPPORT OF QUALIFICATION CRITERIA	YES/NO
6	TECHNICAL BID	YES/NO
7	ACCEPTANCE TO COMMERCIAL TERMS AND CONDITIONS	YES/NO
8	FINANCIAL BID (IN SEALED ENVELOPE)	YES/NO
9	EMD IN PRESCRIBED FORMAT	YES/NO
10	DEMAND DRAFT OF RS 1000/- DRAWN IN FAVOUR OF BSES RAJDHANI POWER LTD	YES/NO
11	POWER OF ATTORNEY/AUTHORISATION LETTER FOR SIGNING THE BID	YES/NO
12	FINANCIAL DATA IN TABULAR FORMAT	YES/NO
13	LIST OF CURRENT COMMITMENTS/ WORK IN PROGRESS	YES/NO
14	BANK SOLVENCY CERTIFICATE	YES/NO
15	NO LITIGATION CERTIFICATE	YES/NO

APPENDIX-XI

FORMAT FOR PERFORMANCE BANK GUARANTEE

BSES RAJDHANI POWER LIMITED

(TO BE ISSUED ON RS 1OO/- STAMP PAPER)

Bank Guarantee No.

Place:

Date:

To
BSES Rajdhani Power Limited

Whereas BSES RAJDHANI POWER LTD (hereinafter referred to as the "Purchaser", which expression shall unless repugnant to the context or meaning thereof include its successors, administrators and assigns) has awarded to M/s. with its Registered/ Head Office at

(Hereinafter referred to as the "Supplier" which expression shall unless repugnant to the context or meaning thereof, include its successors administrators, executors and assigns), a contract no. Dated (the Contract);

And whereas the value of the Contract is Rs. (The Contract Value).

And whereas it is a condition of the Contract that the Supplier shall provide a Performance Bank Guarantee for the due and faithful performance of the entire Contract for a sum equivalent to - % of the Contract Value to the Purchaser on or before

And whereas the Bank under instructions from the Supplier has agreed to guarantee dIe due performance of the Contract.
Now it is agreed as follows:

1. We (Name of the Bank) having its Head Office at (hereinafter referred to as the Bank, which expression shall unless repugnant to the context or meaning thereof, include its successors, administrators, executors and assigns) 5hall indemnify and keep indemnified the Purchaser for, and guarantee and undertake to pay to the Purchaser immediately on written demand, a sum equivalent to % of the Contract Value as aforesaid at any time up to (day/month/year) without any demur, reservation, contest, recourse or protest and/or without any reference to the Supplier, against all losses, damages, costs and expenses that may be caused to or suffered by the Purchaser by reason of any default on the pall of the Supplier in performing and observing any and all the terms and conditions of the Contract or breach on the part if the Supplier of terms or conditions of the Contract.

2. The demand shall consist only of an original letter issued by Purchaser stating that the Supplier has failed to fulfil its obligations under the Contract. Such demand made by the Purchaser on the Bank shall be conclusive and binding notwithstanding any difference or dispute between the Purchaser and the Supplier or any difference or dispute pending before any Court, Tribunal, Arbitrator or any other authority.

3. The Bank undertakes not to revoke this guarantee during its currency without previous written consent of the Purchaser and further agrees that the guarantee herein contained shall continue to be enforceable during the period that would be taken for satisfactory performance and fulfilment in all respects of the Contract or in the event of any dispute between the Purchaser and Supplier until the dispute is settled (provided that d1e claim! demand under this guarantee is lodged /referred during the currency of this guarantee) or till the Purchaser discharges this guarantee whichever is earlier.

4. The Purchaser shall have the fullest liberty without affecting in any way the liability of the Bank under this guarantee from time to time to extend the time for performance of the Contract by tbe Supplier. The Purchaser shall have the

fullest liberty, without affecting the liability of the Bank under this guarantee, to postpone from time to time the exercise of any powers vested in them or of any right which they might have against the Supplier, and to exercise the same at any time in any manner, and either to enforce or to forbear to enforce any covenants, contained or implied, in the Contract. or any other course or remedy or security available to the Purchaser. The Bank shall not be released of its obligations under these presents by any exercise by the Purchaser of its liberty with reference: to the matters aforesaid or any of them or by reason of any other act or forbearance or other acts of omission or commission on the part of the Purchaser or any other indulgence shown by the Purchaser of by any other matter or thing whatsoever which under law would, but for this provision, have the effect of relieving the Bank.

5. The Bank agrees that the Purchaser and its option shall be entitled to enforce this guarantee against the Bank as a principal debtor, in the first instance without proceeding against the Supplier and notwithstanding any security or other guarantee that the Purchaser may hive in relation to the Supplier's liabilities.

6. Notwithstanding anything contained hereinabove the liability of the Bank under this guarantee is restricted to a sum equivalent to % of the Contract Value i.e. Rs.(Rupees) and it shall remain in force up to and including. Unless a demand to enforce a claim under this guarantee is made against the Bank within 3 months from the above date of expiry i.e. up to all the rights of the Purchaser under the said guarantee shall be forfeited and the Bank shall be released and discharged from all liabilities thereafter.

7. This Performance Bank Guarantee shall be governed by the laws of India.

Dated this Witness

day of 20……. at

1. For Bank

2. Signature
Name Power of Attorney No:

Banker's Seal

SECTION XI

VENDOR CODE OF CONDUCT

Bidder shall agree to comply with Vendor code of Conduct as mentioned in BRPL Website. Purchaser is committed to conducting its business in an ethical, legal and socially responsible manner. To encourage compliance with all legal requirements and ethical business practices, Purchaser has established this Vendor Code of Conduct (the "Code") for Purchaser's Vendors. For the purposes of this document, "Vendor" means any company, corporation or other entity that sells, or seeks to sell goods or services, to Purchaser, including the Vendor's employees, agents and other representatives. Fundamental to adopting the Code is the understanding that a business, in all of its activities, must operate in full compliance with the laws, rules and regulations of the countries in which it operates. This Code encourages Vendors to go beyond legal compliance, drawing upon internationally recognized standards, in order to advance social and environmental responsibility.

I. Labour and Human Rights

Vendors must uphold the human rights of workers, and treat them with dignity and respect as understood by the international community.

- Fair Treatment - Vendors must be committed to a workplace free of harassment. Vendors shall not threaten workers with or subject them to harsh or inhumane treatment, including sexual harassment, sexual abuse, corporal punishment, mental coercion, physical coercion, verbal abuse or unreasonable restrictions on entering or exiting company provided facilities.
- Antidiscrimination - Vendors shall not discriminate against any worker based on race, colour, age, gender, sexual orientation, ethnicity, disability, religion, political affiliation, union membership, national origin, or marital status in hiring and employment practices such as applications for employment, promotions, rewards, access to training, job assignments, wages, benefits, discipline, and termination. Vendors shall not require a pregnancy test or discriminate against pregnant workers except where required by applicable laws or regulations or prudent for workplace safety. In addition, Vendors shall not require workers or potential workers to undergo medical tests that could be used in a discriminatory way except where required by applicable law or regulation or prudent for workplace safety.
- Freely Chosen Employment - Forced, bonded or indentured labour or involuntary prison labour is not to be used. All work will be voluntary, and workers should be free to leave upon reasonable notice. Workers shall not be required to hand over government-issued identification, passports or work permits as a condition of employment.
- Prevention of Under Age Labour - Child labour is strictly prohibited. Vendors shall not employ children. The minimum age for employment or work shall be 15 years of age, the minimum age for employment in that country, or the age for completing compulsory education in that country, whichever is higher. This Code does not prohibit participation in legitimate workplace apprenticeship

programs that are consistent with Article 6 of ILO Minimum Age Convention No. 138 or light work consistent with Article 7 of ILO Minimum Age Convention No. 138.

- Juvenile Labour - Vendors may employ juveniles who are older than the applicable legal minimum age for employment but are younger than 18 years of age, provided they do not perform work likely to jeopardize their heath, safety, or morals, consistent with ILO Minimum Age Convention No. 138.
- Minimum Wages - Compensation paid to workers shall comply with all applicable wage laws, including those relating to minimum wages, overtime hours and legally mandated benefits. Any disciplinary wage deductions are to conform to local law. The basis on which workers are being paid is to be clearly conveyed to them in a timely manner.
- Working Hours - Studies of good manufacturing practices clearly link worker strain to reduced productivity, increased turnover and increased injury and illness. Work weeks are not to exceed the maximum set by local law. Further, a work week should not be more than 60 hours per week, including overtime, except in emergency or unusual situations. Workers should be allowed at least one day off per seven-day week.
- Freedom of Association - Open communication and direct engagement between workers and management are the most effective ways to resolve workplace and compensation issues. Vendors are to respect the rights of workers to associate freely and to communicate openly with management regarding working conditions without fear of reprisal, intimidation or harassment. Workers' rights to join labour unions, seek representation and or join worker's councils in accordance with local laws should be acknowledged.

II. Health and Safety Vendors must recognize that in addition to minimizing the incidence of work-related injury and illness, a safe and healthy work environment enhances the quality of products and services, consistency of production and worker retention and morale. Vendors must also recognize that ongoing worker input and education is essential to identifying and solving health and safety issues in the workplace.

The health and safety standards are:

- Occupational Injury and Illness - Procedures and systems are to be in place to prevent, manage, track and report occupational injury and illness, including provisions to: a) encourage worker reporting; b) classify and record injury and illness cases; c) provide necessary medical treatment; d) investigate cases and implement corrective actions to eliminate their causes; and e) facilitate return of workers to work.
- Emergency Preparedness - Emergency situations and events are to be identified and assessed, and• their impact minimized by implementing emergency plans and response procedures, including: emergency reporting, employee notification and evacuation procedures, worker training and drills, appropriate fire detection and suppression equipment, adequate exit facilities and recovery plans.

- Occupational Safety - Worker exposure to potential safety hazards (e.g., electrical and other energy sources, fire, vehicles, and fall hazards) are to be controlled through proper design, engineering and administrative controls, preventative maintenance and safe work procedures (including lockout/tagout), and ongoing safety training. Where hazards cannot be adequately controlled by these means, workers are to be provided with appropriate, well-maintained, personal protective equipment. Workers shall not be disciplined for raising safety concerns.
- Machine Safeguarding - Production and other machinery is to be evaluated for safety hazards. Physical guards, interlocks and barriers are to be provided and properly maintained where machinery presents an injury hazard to workers.
- Industrial Hygiene - Worker exposure to chemical, biological and physical agents is to be identified, evaluated, and controlled. Engineering or administrative controls must be used to control overexposures. When hazards cannot be adequately controlled by such means, worker health is to be protected by appropriate personal protective equipment programs.
- Sanitation, Food, and Housing - Workers are to be provided with ready access to clean toilet facilities, potable water and sanitary food preparation, storage, and eating facilities. Worker dormitories provided by the Participant or a labour agent are to be maintained clean and safe, and provided with appropriate emergency egress, hot water for bathing and showering, and adequate heat and ventilation and reasonable personal space along with reasonable entry and exit privileges.
- Physically Demanding Work - Worker exposure to the hazards of physically demanding tasks,• including manual material handling and heavy or repetitive lifting, prolonged standing and highly repetitive or forceful assembly tasks is to be identified, evaluated and controlled.

III. Environmental

Vendors should recognize that environmental responsibility is integral to producing world class products. In manufacturing operations, adverse effects on the environment and natural resources are to be minimized while safeguarding the health and safety of the public.

The environmental standards are:

- Product Content Restrictions - Vendors are to adhere to applicable laws and regulations regarding prohibition or restriction of specific substances including labeling laws and regulations for recycling and disposal. In addition, Vendors are to adhere to all environmental requirements specified by Purchaser.
- Chemical and Hazardous Materials -Chemical and other materials posing a hazard if released to the environment are to be identified and managed to ensure their safe handling, movement, storage, recycling or reuse and disposal.

- Air Emissions - Air emissions of volatile organic chemicals, aerosols, corrosives, particulates, ozone depleting chemicals and combustion by-products generated from operations are to be characterized, monitored, controlled and treated as required prior to discharge.
- Pollution Prevention and Resource Reduction -Waste of all types, including water and energy, are to be reduced or eliminated at the source or by practices such as modifying production, maintenance and facility processes, materials substitution, conservation, recycling and re-using materials.
- Wastewater and Solid Waste - Wastewater and solid waste generated from operations, industrial processes and sanitation facilities are to be monitored, controlled and treated as required prior to discharge or disposal.
- Environmental Permits and Reporting - All required environmental permits (e.g. discharge• monitoring) and registrations are to be obtained, maintained and kept current and their operational and reporting requirements are to be followed.

IV. Ethics

Vendors must be committed to the highest standards of ethical conduct when dealing with workers, Vendors, and customers.

- Corruption, Extortion, or Embezzlement - Corruption, extortion, and embezzlement, in any form, are strictly prohibited. Vendors shall not engage in corruption, extortion or embezzlement in any form and violations of this prohibition may result in immediate termination as an Vendor and in legal action.
- Disclosure of Information - Vendors must disclose information regarding its business activities, structure, financial situation, and performance in accordance with applicable laws and regulations and prevailing industry practices.
- No Improper Advantage - Vendors shall not offer or accept bribes or other means of obtaining undue or improper advantage.
- Fair Business, Advertising, and Competition - Vendors must uphold fair business standards in• advertising, sales, and competition.
- Business Integrity - The highest standards of integrity are to be expected in all business interactions. Participants shall prohibit any and all forms of corruption, extortion and embezzlement. Monitoring and enforcement procedures shall be implemented to ensure conformance.
- Community Engagement - Vendors are encouraged to engage the community to help foster social and economic development and to contribute to the sustainability of the communities in which they operate.

- Protection of Intellectual Property - Vendors must respect intellectual property rights; safeguard customer information; and transfer of technology and know-how must be done in a manner that protects intellectual property rights.

V. Management System

Vendors shall adopt or establish a management system whose scope is related to the content of this Code. The management system shall be designed to ensure (a) compliance with applicable laws, regulations and customer requirements related to the Vendors' operations and products; (b) conformance with this Code; and (c) identification and mitigation of operational risks related to this Code. It should also facilitate continual improvement.

The management system should contain the following elements:

- Company Commitment - Corporate social and environmental responsibility statements affirming Vendor's commitment to compliance and continual improvement.
- Management Accountability and Responsibility - Clearly identified company representative[s] responsible for ensuring implementation and periodic review of the status of the management systems.
- Legal and Customer Requirements - Identification, monitoring and understanding of applicable laws, regulations and customer requirements.
- Risk Assessment and Risk Management - Process to identify the environmental, health and safety and labour practice risks associated with Vendor's operations. Determination of the relative significance for each risk and implementation of appropriate procedural and physical controls to ensure regulatory compliance to control the identified risks.
- Performance Objectives with Implementation Plan and Measures - Areas to be included in a risk assessment for health and safety are warehouse and storage facilities, plant/facilities support equipment, laboratories and test areas, sanitation facilities (bathrooms), kitchen/cafeteria and worker housing /dormitories. Written standards, performance objectives, targets and implementation plans including a periodic assessment of Vendor's performance against those objectives.
- Training - Programs for training managers and workers to implement Vendor's policies, procedures and improvement objectives.
- Communication - Process for communicating clear and accurate information about Vendor's performance, practices and expectations to workers, Vendors and customers.
- Worker Feedback and Participation - Ongoing processes to assess employees' understanding of• and obtain feedback on practices and conditions covered by this Code and to foster continuous improvement.

- Audits and Assessments - Periodic self-evaluations to ensure conformity to legal and regulatory requirements, the content of the Code and customer contractual requirements related to social and environmental responsibility.
- Corrective Action Process - Process for timely correction of deficiencies identified by internal or external assessments, inspections, investigations and reviews.
- Documentation and Records - Creation of documents and records to ensure regulatory compliance and conformity to company requirements along with appropriate confidentiality to protect privacy.

The Code is modelled on and contains language from the Recognized standards such as International Labour Organization Standards (ILO), Universal Declaration of Human Rights (UDHR), United Nations Convention against Corruption, and the Ethical Trading Initiative (ETI) were used as references in preparing this Code and may be useful sources of additional information.

ANNEXURE-I

TECHNICAL SPECIFICATIONS

BSES Rajdhani Power Limited
BSES Bhawan, Nehru Place, New Delhi- 19

TECHNICAL SPECIFICATION

FOR

ERECTION, TESTING & COMMISIONING OF 33/11 KV KASTURBA NAGAR GRID SUBSTATION AT NEW DELHI ON TURNKEY BASIS

(SPEC NO. BRPL-EHV-TS- KTN)

Prepared by	Sonia Mittal		Rev: 0
Reviewed by	Abhinav Srivastava		Date: 31.03.2025
Approved by	Gopal Nariya		

INDEX

S.No	Description	Page. No
1	General Design Criteria	
2	Civil Work	
3	11/33kV Indoor Circuit Breaker	
3b	11kV bust Duct	
4	Battery Charger & DCDB	
5	Ni-Cd Battery	
6	415 V AC Distribution Board	
7	Power Transformer	
8	Station Transformer	
9	SCADA Interface Works & Automation	
10	11KV Auto-Switched Capacitor Bank	
11	Grounding & Lightning Protection System	
12	LT Power Cable	
13	Control Cable	
14	Exhaust and Ventilation	
15	Fire Extinguisher	
16	Fire Suppression system	
17	Video Surveillance System	
18	Fire Detection & Alarm System	
19	Cable Installation & Accessories	
20	Illumination System	
21	High Mast	
22	Materials Workmanship & Tests	
23	Cable Seal Solution	
24	Misc Activities	
25	Structural Work	
26	Outdoor Switchyard Material	
27	IT Devices	
28	Grid Energy Meter	
29	Packing & Transportation	
30	Approved Vendors	
31	Training and Inspection	

SCHEDULE & ANNEXURE

Volume-2

Schedule	Description	Page No.
Annexure M	Specification for Measurement Instruments	
Annexure-O	Technical specification for New Grids 24x7 O&M support	
Schedule – A	Schedule of General Information	
Schedule – B	List of Drawings enclosed with Bid	
Schedule – C1	Technical Data Sheets of HT Indoor Switchgear	
Schedule – C2	Technical Data Sheets of Power Transformer	
Schedule – C3	Technical Data Sheets of Battery Chargers	
Schedule – C4	Technical Data Sheets of Battery Bank	
Schedule – C6	Technical Data Sheets of 11KV Capacitor Bank	
Schedule – C7	Technical Data Sheets of LT Power Cable	
Schedule – C8	Technical Data Sheets of Control Cable	
Schedule – C9	Technical Data Sheets of Illumination System	
Schedule – C10	Technical Data Sheets of 415 V AC Distribution Board	
Schedule – C11	Technical Data Sheets of Station Transformer	
Schedule – C12	Technical Data Sheets of Grounding & Lightning Protection System	
Schedule – C13	Technical Data Sheets of Cable Accessories	
Schedule – C14	Technical Data Sheets of Cable Trays	
Schedule – D	List of Installation	
Schedule – E1 & E2	Deviation from Specification	
Schedule – F	Delivery, Terms and Conditions	
Schedule – G	Schedule of Tests	
Schedule – H	List of instruments, Testing Equipment, Tools & Tackles for Erection & Maintenance	
Schedule – I	Schedule of Recommended Spares	
Schedule – J	Declaration	
Drawings.		
1	Main Single Line Diagram	
2	Substation Layout Plan (suggestive)	

TECHNICAL SPECIFICATION

FOR

GENERAL DESIGN CRITERIA

1.0 INTENT OF SPECIFICATION

This specification is intended to cover complete design, engineering, manufacturing, assembling, testing at manufacturer's works, supply and Transportation F.O.R. site of all equipment and accessories, steel structures, all structural work, substation building, Civil and architectural work, complete erection, testing, commissioning & putting into successful commercial operation of 33/11 KV AIS substation including supply of all Labour, supervision, tools & plants and supplies as required.

The 33KV AIS single Bus substation shall have following bays with equipments and civil works: - Four (04) no's Feeder Bay – Two (02) no's Transformer bay - One (01) no Bus Coupler bay. -two (02) sets Bus PT.

The substation shall have control room building with 11kV Indoor Switchgear, 33kV Indoor Switchgear, Battery & Battery Charger, ACDB and DCDB etc. The suggestive Layout Plan and Single Line diagram of the substation is enclosed.

This specification shall be read in conjunction with other sections of bidding document. In the event of any discrepancy with the listed document, the most stringent one shall govern. In the tender document, the term 'Contractor', 'Bidder' and 'Vendor' has been used interchangeably.

It is advisable that bidder should visit the site to confirm its present status prior to submission of their bid.

2.0 SCOPE OF SUPPLY

This scope of work shall include design, engineering, manufacture, shop floor testing, inspection, packing, dispatch, loading, unloading and storage at site, transit/storage and construction insurance, assembly, erection, civil structural, architectural work, complete pre-commissioning checks, testing & commissioning at site, obtaining statutory clearance & certification from State Electrical Inspector, Municipal Corporation department, Fire officer, etc. and handing over to the Owner after satisfactory commissioning of complete 33/11 KV substation of BSES Rajdhani Power Ltd. at Kasturba Nagar, New Delhi.

The scope includes all material, equipment and works required for the construction of the Substation complete with all items considered essential for safe and trouble-free continuous commercial operation of the system in a manner acceptable to the Owner and complying with latest revision of National and International Standards, Codes & Practices, Indian Electricity Rules, CEA (Measures relating to Safety and Electric Supply) Regulations 2010 and Indian Electricity Act.

The scope of supply broadly includes the following:

2.1 Major Equipments:

- 11kV Auto-Switched Capacitor Bank (APFC) Outdoor Type -
  - 7.2 MVAR -2 Sets
- 33/11kV 31.5MVA Power Transformer and NIFPS along with accessories- 2 Sets
- 33KV AIS Panels -9 Nos
- 48V NI-cad Battery bank-1 Set
- Battery charger with DCDB -1 Set
- ACDB -1 No.
- Station Aux. Transformer, 11/0.433kV, 400kVA -1 No
- SCADA RTU-1 Set
- High mast lights 16 M high-2 Nos

2.2 Item as System

- 11kV VCB Switchgear Panel board with Numerical protection relays (refer SLD).
- Earthing trucks for 11KV Panels -1 Nos of bus earthing truck and 2Nos of cable earthing truck for each size of panel.
- All Numerical protection Relay shall be supplied with Conformal coating
- Grounding and earthing of entire substation including all the fences such as Power Transformer Fencing, Aux. transformer fencing and capacitor bank fencing as per Technical Specification.
- 48V Ni-cad Battery bank, one set of Battery charger compatible with Ni-cad Battery.
- Outdoor illumination including street lighting with Poles.
- Indoor illumination including emergency lighting (DC lighting incase of black out)
- Air Conditioning, Exhaust and Ventilation for complete substation building.
- Fire detection and alarm system including its SCADA integration.
- Direct stroke lightning protection by shielding spikes.
- 11kV Panel Fire Suppression System including its SCADA integration
- Video Surveillance system including its SCADA integration.
- Material GPS Tracking System.
- Fiber optic Cable including patch cord, LIU splicing inside substation for line differential protection.
- Cable Trench Indoor
- Plinth of Power Transformer shall be considered for minimum 40MVA Power Transformer.
- Culvert for road crossing
- The building foundation shall be designed for Ground floor + two floor
- Fire retardant paint for all cable entering to panels till the cable opening
- 6 Months O&M from the date of handing over of Substation (refer Annexure-O for Details).
- AC and DC Failure Hooter near Security gate at any pole
- Cyber security readiness substation

2.3 Items as Lot

- LT Power & Control cables (fire retardant type) supply and termination and Glands.
- Building Cable entry Sealing

- Supply and providing 11KV Power cable termination kits and Glands.
- Cable trays
- Supply and ETC of Termination Kits
- Supply and installation of Fire extinguisher
- Direct Stroke Lightning Protection for outdoor equipments
- Cabling between equipments and RTU
- **Supply Erection testing and commissioning of Line differential protection Relay at remote end**
- Rubber Mat for all Indoor equipments front and back side
- Material required for IMS (Entry and Exit Sign, First aid Box, tool kit box)

2.4 Civil Works

- As per Civil specification

2.5. Design Work

Design documentation in sufficient copies including design memo, calculations, general arrangement, plans, elevations and sectional drawings, sag/tension calculations, short circuit calculations, electro-dynamic force calculations, single line diagrams, schematic interconnection drawings, wiring diagrams, foundation calculations, foundation plans/details, cable schedules, bill of materials, lighting system design calculations, earthing system design calculations, illumination system design, calculation, conductor sizing, calculation insulation coordination, protection coordination etc.

- Operation & Maintenance Manuals and As-built drawings. (Six sets hard copy & two sets soft copy)
- Documentation required by State Electrical Inspector or by other statutory body for statutory approval/certification of the Substation installation. (as required)
- Temporary sheds for storage of equipment, tools & tackles, construction offices with required fittings & furnishings.

The above equipment and services are specifically listed for the guidance of the Bidder. Apart from the above, Single Line Diagram and Layout Plan (suggestive) may also be referred for further details of equipment. However, it is to be understood that the Contractor's scope is not limited to the items specifically listed above but covers all items required for the completion of a safe and fully functional Substation.

2.6 Tools and Spares

Tools & Commissioning Spares: Contractor should be equipped with all tools, tackles and commissioning spares for successful commissioning of substation.

Recommended Spares: Contractor shall be providing the Owner a list of recommended spares along with quantity and market/budgetary prices. This shall be a recommendation only and shall not be a part of quotation for price bid

3.0 COMPLETION SCHEDULE

The contractor shall be fully responsible to complete the project in time. It is desired that the total project should complete in *300 days* from the date of LOA. The broad completion schedule is attached here under for reference. The detailed completion schedule shall be prepared by contractor in MS-Project or Primavera software and shall be submitted at the time of detail engineering for approval. The detailed schedule shall be finalized with the help of schedule given by Owner.

Activity schedule shall be as tabulated below. The reference date shall be the date of LOA.

Sl. No.	Description of Work	Time Line from Zero Date(in days)	Responsibility
1	Zero Date (Letter of Award)	0	BRPL
2	Mobilization of manpower	15	Contractor
3	Inception Report	15	Contractor
4	PERT chart approval / L2 schedule majorly including : • Manpower & Machinery to be deployed • Procurement of major equipment • Dispatch schedule of the major item • Intermediate milestone schedule	15	Contractor
5	Submission of Drawings/Documents/ calculations for Engineering Approval	30	Contractor
6	Engineering Approval	60	BRPL
7	Civil Works	130	Contractor
8	Procurement/Supplies	210	Contractor
9	Equipment Erection	240	Contractor
10	Commissioning of 33kV line	255	BRPL
11	Commissioning of 1st Power Transformer	**255**	Contractor
12	Commissioning of 2nd Power Transformer	**270**	Contractor
13	Testing & Commissioning of entire substation	285	Contractor
14	Handing Over	300	Contractor

4.0 ELECTRICITY & WATER FOR CONSTRUCTION

Electricity Supply and Water for construction purpose shall be arranged by Contractor.

5.0 SUPPLY AND WORKS BY BIDDER

The termination kits/jumpers, Glands, Cable Seal and interconnections for all the Cables/Conductors shall be in the scope of Contractor. Extension of 48 core (12 Single Mode and 36 Multimode) Fiber optic embedded in Infeed Power Cable and interconnections for all the Cables/Conductors (with all the accessories of 48 core FO including LIU, joint box, patch cord and extension of fiber optic from Power Cable to LIU), shall be in the scope of Contractor. Laying of cables and stringing of Conductors including its hardware fitting and insulators in the substation premises shall also be in the scope of Contractor only. Cable mounting structure for Power transformer Incoming shall be in Contractors scope.

Works for Future Transformer like Transformer Foundation, Cable trench, Earthing, Cable Seal, Cable Trays shall be in Contractors scope. Also Earthing and grounding, DSLP, illumination, trenches for future transformer shall be in Contractors scope.

.**WORKS BY OWNER:** The following works shall be carried out by Owners:

1. Soil Investigation and Soil resistivity test
2. Topographical survey

The trenches and cable trays for Incoming/outgoing cables inside the Substation premises shall be in the scope of Contractor.

6.0 SUPPLIES AS FREE ISSUE ITEMS:

The following items shall be supplied free of cost to vendor:

- 11 kV 1Cx1000 sq. mm. XLPE Cables
- 11 kV 3Cx400 sq. mm. XLPE Cables
- 11 kV 3Cx400 sq. mm. XLPE Cables OFC embedded
- 33kV 3Cx400 sq. mm XLPE Cables
- ACSR Zebra Conductor (if required)

However, the termination kits/jumpers, Glands and interconnections for the above Cables/Conductors shall be in the scope of vendor. Laying of these free issued cables, stringing of Conductors including its hardware fitting & insulators and ETC of Power Transformers in the substation premises shall also be in the scope of vendor only.
For free issue items, issue and return of items/excess materials Transportation from BRPL Stores to Site or Site to BRPL stores shall be in Vendors Scope of work.

7.0 COORDINATION WITH STATUTORY BODIES & OUTSIDE AGENCIES

The Contractor shall be fully responsible for getting all statutory clearances, including but not limited to Electrical Inspector clearance, Fire officer or any other statutory bodies for implementation of the work.

The contractor shall be fully responsible for carrying out all co-ordination and liaison work as may be required with Electrical Inspector, Civic Agencies (MCD/DDA/PWD or any other), Horticulture department, Fire officer or any other statutory bodies for implementation of the work.

The application on behalf of BRPL for submission to the Electrical Inspector and other statutory bodies along with copies of drawings complete in all respects shall be done by the contractor & approval / certificates shall be obtained by the contractor well ahead of time so that the actual commissioning of equipment is not delayed for want of inspection and approval by the inspector & statutory bodies. The contractor shall arrange the actual inspection work by Electrical Inspector.

Official fees to electrical inspector / statutory bodies shall be paid by the Contractor.

8.0 COORDINATION WITH OTHER CONTRACTOR & OWNER'S SYSTEM

The contractor shall be fully responsible for carrying out all the co-ordination work required with their sub-contractors, if any, as well as with Owners system for execution and completion of work.

9.0 TERMINAL POINTS OF CONTRACTOR'S SCOPE

9.1 Up to Line take off point and **including provision for Cable termination at the incomer and outgoing bays.**

9.2 Outdoor Cable Trenches : Upto the boundary wall of substation

9.3 Lighting/Illumination/Lightning : Within Outdoor &Indoor Substation Area

9.4 Earthing : Within Substation area and building.

9.5 Water supply and drainage at suitable point near the substation boundary wall at location to be decided during detailed engineering.

10.0 SALIENT FEATURES, BASIC DESIGN CRITERIA AND MINIMUM TECHNICAL REQUIREMENTS OF 33/11 KV SUBSTATION/SUBSTATION EQUIPMENTS

10.1 Introduction

BRPL is setting up 33/11KV AIS Grid substation at Kasturba Nagar New Delhi. The Substation shall be constructed on turnkey EPC execution. EPC contractor is responsible for detailed design also. In this paragraph only salient features, basic design criteria and Owner's minimum technical requirements are enumerated for the guidance of the Bidder. However, this should be referred in conjunction with SLD enclosed. The salient features of substation have been tabulated as under:

Particulars	**Description**
Voltage Level	33/11 kV
Infeed Plan	**33 kV Double Circuit**
Infeed arrangement	**33 kV U/G Cables**
Substation Capacity	2 x 31.5 MVA
Present status of Land	In possession of BRPL
Previous work done at site(if any)	**Boundary wall**

10.2 Substation Capacity

The substation capacity shall be as per the table in Clause no. 10.1 above.

10.3 11KV Switchgears

The 11KV Switchgear shall be installed inside the substation building. The switchgears shall be equipped with Vacuum Circuit Breaker. The metering and protection relays shall be part of switchgear only. Control voltage shall be 48 V DC.

10.4 33/11KV Power Transformer

The Outdoor Power transformer shall be 31.5MVA, ONAN/ONAF with OLTC. The microprocessor based Transformer monitoring relay shall be provided in place of RTCC panel. Each Transformer shall be provided with NIFPS along with its cables, **one extra N2 cylinder** and extra valves as per specification.

10.5 Battery Charger and Battery Bank

The Control supply shall be 48V DC. The Ni-Cad Battery bank shall be installed in separate room with proper ventilation system as per safety requirement .The battery charger shall be installed inside control room building and shall be SCADA compatible.

10.6 11kV APFC Capacitor Bank

Two set of 7.2MVAR capacitor bank shall be installed outdoor. Each capacitor bank shall have one fixed step of 1.8 MVAR and three steps of 1.8 MVAR. Each sub bank shall be provided with motorized 11KV Isolator cum earth switch, 0.2% series reactors, capacitor switch/vacuum contactor, LA, HT fuses, RVT, Neutral Displacement Relay (numerical type), Under voltage Relay, Automatic power factor controller and all necessary equipment for auto switching.

10.7 Protection coordination through ETAP Software.

Software with license

10.8 Power and Control cable -

All power and control cables within substation premise will be laid in single piece. No cable joint shall be accepted within substation premise.

10.9 Other Parameters for 66 KV Substation

Following parameters /service conditions shall prevail for entire system design under the scope of this turnkey project:

General Service Condition

S. No	Particulars	Data
1	Design Ambient temperature	50 °C
2	Seismic Condition	Zone IV as per IS 1893
3	Wind Pressure	195 kg/M² upto elevation of 30 M as per IS 875
4	Maximum Relative Humidity	100%
5	Maximum Altitude above Sea level	1000M
6	Rainfall	750mm (concentrated in 4 months)
7	Pollution level	Heavy/Dry

System Parameters

S. No.	Parameters	HV Side	LV Side
1	Nominal Voltage (kV)	33	11
2	Rated Voltage (kV)	36	12
3	Rated Frequency (Hz)	50 +/- 3%	50 +/- 3%
4	System Neutral Earthing	Solidly Grounded	Solidly Grounded
5	Short Circuit rating (for 3 sec)	26.3 kA	500 MVA / 40 kA
6	Basic Insulation Level		
6.1	Impulse frequency withstand voltage (kVp)	170	75
6.2	Power frequency withstand voltage (kV rms)	70	28
7	Internal arc withstand capability kA/s	-	40kA for 1 sec

Parameters for outdoor Switchyard Equipments (66kV)

S.No	Particulars	33kV	11kV
1	Minimum Creepage	31mm/KV	31mm/KV
2	Minimum Clearances		
2.1	Phase to Phase	320 mm	280mm
2.2	Phase to Earth	320 mm	140mm
3	Safety Clearances		
3.1	Sectional Clearances	3000 mm	
3.2	Height of lowest live point on the insulator from the ground	4300 mm	
4	Bus Configuration	Single Bus	Single Bus
5	Conductor	Silver Platted/tinned electrolytic copper / ACSR Zebra(For Jumpering)	Silver Platted/tinned electrolytic copper

Site Service Conditions (considering main external road at 0.00 level)

S. No.	Particulars	Level
1	Substation Road level	+750 mm
2	Final top level of gravel in outdoor yard	+750 mm
3	Final top level of Equipment & gantry foundation	+1050 mm
4	Control Room Building Plinth Level	+1500 mm

11.0 CODES & STANDARDS

The contractor shall follow latest Indian Standards or international standard. Refer respective equipment specification for applicable standards.

12.0 ENGINEERING DELIVERABLES

The Bidder shall submit following minimum Engineering Deliverables from award of the Contract. Any other drawing / calculation which is not listed below and may be required for execution of the job shall also be submitted by the bidder.

S. No.	Drawing Title
A.	Inception report including work schedule and PERT chart within two weeks from LOA(Letter of Award)
B.	**Electrical Drawing**
1	Main Single Line Diagram indicating bus/breaker rating, cable/overhead conductor size, fault levels of different voltage grade, Transformer details, metering and protection with CT / PT cores / ratio / burden / accuracy class.
2	Complete BOQ of the substation with technical details.
3	Single Line Diagram of 415 V AC Distribution board
4	Single Line Diagram of 48V DC Distribution board
5	Overall Site Layout Plan
6	Maximum & Minimum fault level calculation for the substations
7	Insulation coordination
8	Switchgear/Control building layout – Plan
9	Cable trench layout Plan & Section – outdoor (As applicable)
10	Cable tray layout Plan & Section – Indoor
11	BOQ of Cable trays and accessories
12	Sizing calculation of LV Cables
13	Power cable schedules
14	Control cable schedules
15	BOQ of Cables
16	Codification of cable trays and cable tray/cable tag marking concept
17	Ground mat design Calculation from actual site soil investigation
18	Drawing of ground mat along with BOQ
19	Drawing of Indoor equipment grounding details
20	Outdoor equipment grounding arrangement and details
21	Input /Output list of SCADA system
22	Outdoor Illumination system design Calculation
23	Indoor Illumination system design Calculation
24	Drawing of Outdoor Illumination with erection details
25	Drawing of Indoor Illumination with erection details
26	Complete BOQ indoor and outdoor illumination system
27	CT/PT sizing/detail calculation of burden, knee point voltage
28	All major equipment sizing calculation
29	Cabling, earthing & lightning concept
30	Power Transformer foundation details, soak pit arrangement, firewall segregation
31	Fire fighting arrangement of Transformers and indoor equipments
32	Relay setting with calculations
33	Switchgears details and its calculations
34	As built documentation of the drawing / documents
35	DC Sizing Calculation
36	Exhaust and Ventilation
37	All the other required design Documents
C.	**Civil Drawings**

S. No.	Drawing Title
S. No	**Drawing Title**
1	Layout Plan For Control Building
2	RCC detail of Control Room Building
3	RCC detail of Outdoor Cable Trench including trench cover
4	GA & RCC detail of Transformer foundation & Oil Soak pit
5	GA & RCC detail of Auxiliary Transformer
6	GA & RCC detail of Capacitor Bank
7	GA & RCC detail of Burnt Oil Tank
8	GA & RCC detail of Lighting poles
9	GA & RCC detail of Equipment foundation
10	Structural Detail of Equipment
11	Overall layout plan indicating landscaping.
12	Detail of Fire wall
13	GA & RCC detail of NIFPS System
14	Detail of Water Supply and Sanitary system
15	GA & RCC detail of Septic Tank
16	Detail of Rainwater Harvesting System (detail of recharge pit)
17	GA & RCC detail of Underground Water Tank
18	GA and detail of fencing with gates of Switchyard, Capacitor Bank & Auxiliary Transformer
19	GA and Section of Road & Storm Water Drain
20	RCC detail of Security Gumtee
21	Outdoor Trench layout for switch yard
22	Sectional Details for Outdoor Trenches
23	Conduit plan for Control room building.
24	Switch yard layout

13.0 SUBMISSION OF DRAWINGS & OTHER DOCUMENTS

BOQ, Calculations and other documents etc. shall be on A4 size paper. All the drawings shall be drawn to the scale as far as possible on A3 size or larger size paper and should be legible. The drawings shall be submitted in colour copy. The submission shall be

- Three (03) Sets of drawings/BOQ/Calculation for Owners review and approval.
- Three (03) Sets of approved drawings/BOQ/Calculation for construction reference.
- Six (06) Sets of final As Built drawings, design, BOQ, Calculation. O&M manual for all equipments supplied.
- Soft copies of all drawings/Documents/calculation in Auto CAD and Microsoft office file format as applicable.
- Bidder shall create a google drive for storage of all the As built drawing , Factory test report & catalogue. A QR code will be generated and paste on each equipment so that the drawings are accessible for all authorised BRPL officials.

Drawings shall be treated as submitted, only if provided with BOQ (If applicable). Transmittal sheet shall be mandatory to attach with all the drawing and documents. Format for transmittal shall be provided to successful bidder for drawing approvals etc.

14.0 TEST CERTIFICATES

All equipments shall be tested as per their corresponding specification in Tender document.
All tests (Type test, Routine test, Acceptance test) shall be carried out at bidders cost. However prices against special test for equipments have to be quoted separately. Special test shall be Owners decision.
Type and Special test has to be carried out at CPRI/ERDA or as mentioned in specification. Routine,and Acceptance tests may be carried out at manufacturer's lab.
Bidder shall submit type test certificate of all the equipment with validity of five years (on the date of bid opening carried out at CPRI/ERDA.

15.0 QUALITY PLAN

15.1 Manufacturing Quality Plan

Manufacturing Quality plan with respect to all major equipment and work has to be submitted by the successful bidder for following as a minimum:

I. An outline of the proposed work and execution plan for approval.
II. The structure of the supplier's organization for the contract
III. The duties and responsibilities assigned to staff ensuring quality of work for the contract
IV. Hold and notification points
V. Submission of engineering documents required as per specification
VI. The inspection of materials and components Inspection during fabrication /construction
VII. Final inspection & tests

Successful bidder shall include submittal of bills invoice, Bill of lading, and factory test certificate for grade, physical tests, dimension, and specific watt loss per kg of core material to the purchaser for verification in quality plan suitably.

15.2 Field Quality Plan

- Quality Assurance Plan for various stages of execution work shall be submitted by Contractor for approval of Owner. The plan should include the Organization structure so the Safety personnel to ensure the Manpower and Material safety during the entire duration of execution.
- Environment, Health and Safety (EHS) shall be covered in the plan submitted by Contractor.
- A checklist to ensure the quality of equipment installation shall be submitted by Contractor for approval

16.0 INSPECTION

As per Chapter 40 (Training and Inspection) Volume - 1

17.0 TRAINING OF BRPL OFFICIALS

As per Chapter 40 (Training and Inspection) Volume - 1

18.0 MONITORING OF MATERIAL DISPATCH STATUS

Once the material is dispatched after Final clearance Transport Vehicle shall have GPS Tracking Device (Preferably Map My India Asset Tracking Device) and status of dispatch of material shall be sent to all the stake holders via SMS thru GPS Device. This shall be applicable to all the major equipments like GIS Panels, HT Panel, and Power Transformers, CRP and RTU.

19.0 OPERATION AND AFTER SALE SERVICES

Contractor shall carry out all day to day operations of entire Substation after successful commissioning for a period of 6Months. Contractor shall assign 24x7 operating personnel for operation activities.
Contractor shall appoint appropriate after sale services staff for all necessary service requirements for a period of 6 Months. Contractor shall keep all necessary spares, tools & tackles, T& P, testing equipments for successful operation and maintenance requirement for said period.
Contractor shall provide after sale support for the tenure of stipulated time.
Responsibility of Contractor O&M Engineer shall include:

a) Training of BRPL officials on successful operation of all the substation equipment including switchgears , Relays and SCADA.

b) Operation and Maintenance of entire substation including all switchgears, Relays and SCADA.

c) Refer Annexure-O for details

TECHNICAL SPECIFICATION

FOR

CIVIL WORKS

1.0 GENERAL REQUIREMENT

1.1. This chapter includes the technical requirements for Establishment of **33/11 KV AIS Substation at Kasturba Nagar** including associated design and preparation of all civil & structural drawings and execution of all associated civil works. This chapter deals mainly with technical specifications for the design, supervision and construction of complete civil works including structural and finishing works.

1.2. The specifications are intended for general description of work, quality and workmanship. The specifications are not however exhaustive to cover minute details and the work shall be executed according to relevant latest Indian Standards/IRC specifications/CPWD specifications. In the absence of the above, the work shall be executed according to the best prevailing practices in the trade, recommendations of relevant American or British Standards or to the instructions of Engineer. The IS standards/IRC specifications/CPWD specifications to be followed are mentioned in the technical specifications attached hereto. They shall be latest edition/version of the same issued 15 days prior to the date of opening of this tender. The Contractor is expected to get himself clarified on any doubts about the specifications etc. before bidding and the discussions recorded in writing with the Owner in respect of interpretation of any portion of this document.

1.3. The work shall be carried out according to the design / drawings to be developed by the Contractor and approved by the Owner based on Tender Drawings supplied to the Contractor by the Owner. For all buildings, structures, foundations etc. necessary layout and details shall be developed by the Contractor keeping in view the functional requirement of the Sub-Station facilities and providing enough space and access for operation, use and maintenance based on the input provided by the Owner. Certain minimum requirements are indicated in this specification for guidance purposes only. However, the Contractor shall quote according to the complete requirements.

1.4. The Contractor shall take all necessary precautions to protect all the existing equipments, structures, facilities & buildings etc. from damage. In case any damage occurs due to the activities of the Contractor on account of negligence, ignorance, accidental or any other reason whatsoever, the damage shall be made good by the Contractor at his own cost to the satisfaction of the Engineer. The Contractor shall also take all necessary safety measures, at his own cost, to avoid any harm / injury to his workers and staff from the equipment & facilities of the power station.

1.5. During the progress of work, the Engineer will exercise supervision of the work to ensure that the technical provisions of the contract are being followed and the work is being executed accurately and properly. However, such supervision shall in no way relieve the Contractor of the responsibility for executing the work in accordance with the specifications.

1.6. Before submitting the bid, the Contractor shall inspect and examine the site and its surroundings and shall satisfy himself as to the nature of the ground and subsoil, the availability of materials necessary for completion of the work, means of access to site and in general shall himself obtain all necessary information as to risks, contingencies and other circumstances which may influence or affect his offer. No extra claim consequent on any misunderstanding or otherwise shall be allowed.

1.7. During execution, if any additional requirement arises for successful commissioning of grid ,then same shall be in scope of vendor by considering all safety and quality standards in all aspects

2.0 GEOTECHNICAL INVESTIGATION

The Owner will carry out Geo Technical Investigation and Topographical Survey for the entire Sub-Station plot including switchyard. The copy of the report will be given as an input to bidder for Civil

Design & estimation work. In case of any further detailed study is required, same shall be in scope of bidder.

3.0 SITE PREPARATION

3.1. Scope

3.1.1. This clause covers the design and execution of the work for site preparation, such as clearing of the site, the supply and compaction of fill material, excavation and compaction of backfill for foundation, road construction, drainage, trenches and final topping by stone (broken hard stone). This work shall also include disposal of any non-essential/excess soil or malba.

3.2. General

3.2.1. The layout and levels of all structures, etc shall be made by the Contractor at his own cost from the general grids of the plot and benchmarks finalized / approved by the Owner. (The required filling up to formation level shall be in the scope of Vendor). The Contractor shall give all help in instruments, materials and personnel to the Owner for checking the detailed layout and shall be solely responsible for the correctness of the layout and levels.

3.2.2. The Contractor shall have to make good to all the damages to the boundary wall and gates during work execution.

3.2.3. Contractor shall develop a building layout and other layouts so that the trees inside the plot shall be avoided from cutting. In extreme conditions, if the tree cutting is unavoidable, necessary liaison for permission shall be on part of Contractor from respective Govt. Agency. Requisite formalities shall be carried out by Owner. Fee shall be borne by the Owner. Compensatory plantation shall be done (if required) by vendor; BRPL shall provide space for the same.

3.2.4. The Contractor shall develop the site area to meet the requirements of the intended purpose. The site preparation shall confirm to the requirements of relevant sections of this specification or as per stipulations of standard specifications.

3.2.5. If fill material is required, the fill material shall be suitable for the above requirement. The fill shall be such a material and the site so designed as to prevent the erosion by wind and water of material from its final compacted position or the in-situ position of undisturbed soil.

3.2.6. Material unsuitable for filling works shall be removed and replaced by suitable fill material and to be approved by the Owner.

3.2.7. Backfill material around foundations or other works shall be suitable for the purpose for which it is used and shall be compacted to the density described under Compaction. Excavated material not suitable or not required for backfill shall be disposed off by the contractor in areas as directed by Owner upto a maximum lead of 5 km. Backfill material if found having mix of earth and fly ash should not be used for top 30 cm of formation level and should be supplemented with earth at the cost of contractor. The old / existing foundations if not required shall be dismantled by the contractor.

3.3. Excavation and Backfill

3.3.1. Excavation and backfill for foundations shall be in accordance with the relevant code.

3.3.2. Whenever water level is met during the excavation, it shall be dewatered and water level shall be maintained below the bottom of the excavation level during excavation, concreting and backfilling. Nothing extra shall be payable by the owner on this account.

3.3.3. When embankments are to be constructed on slopes of 15% or greater, benches or steps with horizontal and vertical faces shall be cut in the original slope prior to placement of embankment material. Vertical face shall measure not more than 1 m in height.

3.3.4. Embankments adjacent to abutments, culverts, retaining walls and similar structures shall be constructed by compacting of the material in successive uniform horizontal layers not exceeding 15 cm in thickness (of loose material before compaction). Each layer shall be compacted as required by means of mechanical tampers approved by the Owner. Rocks larger than 10cm in any direction shall not be placed in embankment adjacent to structures.

3.3.5. Earth embankments of roadways and site areas adjacent to buildings shall be placed in successive uniform horizontal layers not exceeding 20 cm in thickness in loose stage measurement and compacted to the full width specified. The upper surface of the embankment shall be shaped so as to provide complete drainage of surface water at all times.

3.4. Compaction

3.4.1. The density to which fill materials shall be compacted shall be as per, relevant IS and as per direction of Owner. All compacted sand filling shall be confined as far as possible. Backfilled earth shall be compacted to minimum 95% of the Standard Proctor's density at OMC. The sub grade for the roads and embankment filling shall be compacted to minimum 95% of the Standard Proctor's density at OMC. Cohesion less material sub grade shall be compacted to 70% relative density (minimum).

3.4.2. At all times unfinished construction shall have adequate drainage. Upon completion of the roads surface course, adjacent shoulders shall be given a final shaping, true alignment and grade.

3.4.3. Each layer of earth embankment when compacted shall be as close to optimum moisture content as practicable. Embankment material which does not contain sufficient moisture to obtain proper compaction shall be wetted. If the material contains any excess moisture, then it shall be allowed to dry before rolling. The rolling shall begin at the edges overlapping half the width of the roller each time and progress to the center of the road or towards the building as applicable. Rolling will also be required on rock fills. No compaction shall be carried out in rainy weather.

3.5. Requirement for fill material under foundation

3.5.1. The thickness of fill material under the foundations shall be such that the maximum pressure

from the footing, transferred through the fill material and distributed onto the original undisturbed soil will not exceed the allowable soil bearing pressure of the original undisturbed soil. For expansive soils the fill materials and other protections etc. to be used under the foundation has to be approved by the Owner.

4.0 CODES AND STANDARDS

All standards, specifications, acts and code of practice shall be followed. In case of conflict between this specification and those (IS standard/ IRC specification/CPWD Specification, etc.) referred to herein, the former shall prevail.

5.0 SUBMISSIONS

The following documents shall be submitted by the Contractor for approval of the BRPL prior to commencement of fabrication and erection / construction.
This list is not exhaustive but indicative only. Final list of drawings shall be prepared by successful bidder during detailed engineering. Bidder shall submit the qualification details of his licensed Architect & structural engineer (Approved by any Govt organization for detailed engineering/Structural design/approved by Institution of Engineers (India).

i. Design calculation, general arrangement drawings, foundation drawing & detailed erection / construction drawings including R/F drawings for Sub-Station Control Room Building.
ii. Foundation design and drawing of Cable Pot Head.
iii. Foundation design & drawing of all equipment foundations.
iv. Structural steel fabrication drawings for Cable Pot & equipment support structure.
v. Site preparation, filling up to formation level, removal of trees, if any and site cleanliness
vi. Foundation design & drawing of Power Transformer
vii. Design & drawing of transformer grating, firewall & burnt oil tank
viii. Foundation design & drawing for lighting pole.
ix. Foundation design & drawing of Capacitor bank (roof/yard as decided during engineering), Auxiliary Transformer and design of fencing for both.
x. Complete fencing along with gate for the Sub-Station yard
xi. Details of Indoor and Outdoor Cable Trenches with cable tray supports and trench covers
xii. Design & drawing of Rainwater Harvesting System, sewerage system including septic tank, water supply arrangement, landscaping, etc.
xiii. Design & drawing of roads and complete drainage system (with final connection to Rain Water Harvesting recharge pit) within Sub-Station including crossings.
xiv. Design & drawing Security room.
xv. Design & drawing NIFPS system & underground water tank.

6.0 SUB-STATION CONTROL ROOM BUILDINGS GENERAL REQUIREMENTS

6.1. General

6.1.1. The scope includes the design, engineering and construction including anti-termite treatment, plinth protection, DPC of buildings including sanitary, water supply, electrification, fire fighting system, etc. The building shall be of RCC framed structure of minimum concrete grade M25. The Sub-Station Building shall include rooms as specified below:

S. No.	Facility
i	Control/relay/ACBD Room
ii	Switchgear Room/ GIS Room
iii	Cellar/ power cable trench
iv	Battery Room/ Charger Room, Maintenance room and office rooms
v	Pantry
VI	Toilet (Male & Female separately)
VII	Staircase (for approach till topmost roof slab) including separate staircase for Fire-escape.
VIII	Steel staircase with all safety features for approach till mumty slab

6.1.2. Minimum floor area requirements have been given in tender drawings, which may be increased at the time of detailed engineering to suit project requirements.

6.1.3. An open space of 1200 mm minimum shall be provided on the periphery of the rows of panel and equipment generally in order to allow easy operator movement and access as well as maintenance.

6.1.4. The building shall be aesthetically designed keeping in view the surrounding landscape; proper architecture shall be used to design the exterior look and finish. The architectural drawing shall be submitted for Owner's approval.

6.1.5. Future extension of one floor shall be considered at the time of design. Any other possibility of annex building shall be taken care of while finalizing the layout of the control room building.

6.1.6. Control Room cum Administrative building shall be constructed as per the approved drawings by Owner. CPWD specification shall be followed in all the building works. The clear height of building shall be minimum 4.50 m (from Finish floor level to bottom of roof beam of First floor & Second Floor). The height of GIS hall shall be as per requirement of GIS equipment & EOT.

6.1.7. Plinth level of sub-station building shall be 750mm above the existing slab/ road.

6.2. Design

a) The Building shall be designed on Green Building Concept duly certified by (IGBC Green Service Building rating certification/Svagriha Certification). The design of control room building shall be such decided that's minimum one floor can be added in future.

Following parameters shall be followed: -

- To the requirements of the National Building Code of India and the standards quoted therein. The contractor shall also arrange approval of building from any local authorities such as MCD or fire officer if required so. The official fees shall be born by BRPL.
- For the specified climatic & loading conditions.
- The building shall have framed super structure.

- To adequately suit the requirements of the equipment and apparatus contained in the buildings and in all respects to be compatible with the intended use and occupancy.

- With a functional and economical space arrangement.

- To be aesthetically pleasing. Different structures shall show a uniformity and consistency in architectural design.
- To allow for easy access to equipment and maintenance of the equipment.

- With wherever required, fire retarding materials for walls, ceilings and doors which would prevent supporting or spreading of fire.

- With materials preventing dust accumulation.

b) Suitable expansion joints shall be provided in the longitudinal direction wherever necessary with provision of twin columns.

c) Individual members of the buildings frame shall be designed for the worst combination of forces such as bending moment, axial force, shear force, torsion etc.

d) Permissible stresses for different load combinations shall be taken as per relevant IS Codes.

e) The building lighting shall be designed in accordance with the requirements of relevant section.

f) The building auxiliary services like exhaust and ventilation systems, fire protection and detection systems and all other miscellaneous services shall be designed in accordance with the requirements specified in relevant section or elsewhere in the Specification for the project.

g) Two nos. of emergency exits shall be provided in the building.

6.3. Design Loads

Building structures shall be designed for the most critical combinations of dead loads, super- imposed loads, equipment loads, crane load, wind loads, seismic loads, and temperature loads Dead loads shall include the weight of structures complete with finishes, fixtures and partitions and should be taken as per IS:875. Super-imposed loads in different areas shall include live loads, minor equipment loads, cable trays, small pipe racks & hangers and erection, operation and maintenance loads. Equipment loads shall constitute, if applicable, all load of equipments to be supported on the building frame The wind loads shall be computed as per IS 875, Seismic Coefficient method shall be used for the seismic analysis as per IS 1893 with importance factor 1.5.

For crane loads an impact factor of 25% and lateral crane surge of 10% (of lifted weight + trolley weight) shall be considered in the analysis of frame according to provisions of IS : 875 (latest revision). The longitudinal crane surge shall be 5% of the static wheel load. For temperature loading, the total temperature variation shall be considered as 2/3 of the average maximum annual variation in temperature. The average maximum annual variation in temperature for the purpose shall be taken as the difference between the mean of the daily minimum temperature during the coldest month of the year and mean of daily maximum temperature during the hottest month of the year. The structure shall

be designed to withstand stresses due to 50% of the total temperature variation. Wind and Seismic forces shall not be considered to act simultaneously.

Floors/slabs shall be designed to carry loads imposed by equipment. Floors shall be designed for live loads as per relevant IS codes. Cable and piping loads shall also be considered additionally for floors where these loads are expected.

In addition, beams shall be designed for any incidental point loads to be applied at any point along the beams, the floor loads shall be subject to Owner's approval.

For consideration of loads on structures IS: 875, the following minimum superimposed live loads shall however be considered for the design.

RCC-Floor	5 KN/M2	for offices,
GIS & all Equipments Room Floor	15 KN/M2 (min)	actual requirements if higher than 15KN/M2 based on equipment weight and Layout plan
Stairs & balconies	5 KN/M2	
Chequered plate floor	4 KN/M2	

Any additional load coming in the structure shall be calculated as per IS: 875.

6.4. Submission

The following information shall be submitted for review and approval to the Owner:

a) Design criteria shall comprise the codes and standards used. Applicable climatic data including wind loads, earthquake factors, maximum and minimum temperatures applicable to the building locations, assumptions of dead and live loads, including equipment loads, impact factors, safety factors and other relevant information.

b) Structural design calculations and drawing (including construction/fabrication) for all reinforced concrete and structural steel structures.

c) Fully, dimensioned concept plan including floor plans, cross sections, longitudinal sections, elevations and perspective view of each building. These drawings shall be drawn at a scale not smaller than I : 50 and shall identify the major building components.

d) Fully dimensioned drawings showing details and sections drawn to scales of sufficient size to clearly show sizes and configuration of the building components and the relationship between them.

e) Product information of building components and materials, including walls partitions flooring ceiling, roofing, door and windows and building finishes.

f) A detailed schedule of building finishes including color schemes.

g) A door & window schedule showing door types and locations, door lock sets and latch sets and other door hardware.

h) Copy of all tests/ studies/ investigation carried out by bidder as per scope.

Approval of the above information shall be obtained before ordering materials or starting fabrication or construction as applicable.

6.5. Flooring

Flooring in various rooms of control room building shall be as per detailed schedules given in Table – 1. Pantry countertop shall be of granite stone of required specification as per direction of Engineer-In-Charge.

2. Providing and fixing Raised Access Flooring .The Access raised floor shall be heavy grade UNIFLOOR FS800H with point load of 3.6KN/over 25mm sq. and UDL of 15 KN /M2 panels manufactured from steel with lightweight cementitious core in the size 600x600x35mm.The bottom of the panel shall be embossed in hemispherical shape to give strength and flexural rigidity on the exposed surface for lifetime protection and shall be zinc whisker free. The panel has to be placed on the pedestal base plate 100x100x8mm x 25mm solid road 450mm/600MM height 75x75x4mm mm top plate made from all steel zinc plated construction . pedestal assembly shall provide for easy adjustment of leveling and accurately align panels to ensure lateral restrain. Pedestal head shall be designed to avoid rattle or squeaks. The steel base plate of the pedestal shall be fixed on to the sub-floor with epoxy pedestal adhesive and /or mechanical fixing. An all-steel rectangular stringer system having pre punched holes at both ends to ensure correct alignment with pedestal heads be applied for maximum stability.The panel shall be finished with high abrasion anti-static HPL in size 600x600x0.9mm with beading on all sides to provide protection of edges as per Drawings and as per Manufacturers recommendations. Providing Heavy Duty Double Suction Panel Lifter is included in item. Grommets for Easy Cable Access shall be provided as per design wherever required.
600 mm Finished Floor Height (FFH)

6.6. Walls

Control room building shall be of framed superstructure. All walls shall be non-load bearing walls. Minimum thickness of walls shall be 340mm upto DPC level in cement mortar 1:4 (1 Cement: 4 Coarse sand) and 230mm above DPC level in cement mortar 1: 4 (1 Cement: 4 coarse sand). Parapet walls (Incl. s/stn building and mumty) shall be 230 mm thick and 1100mm high from top of roof treatment. 50 mm CC coping to be provided on parapet walls.

6.7. Plastering

All internal walls shall have minimum 12mm/ 15mm thick 1:4 (1 Cement : 4 coarse Sand) cement sand plaster. The ceiling shall have 6mm thick 1:3 cement sand plaster.

6.8. Finishing

All external surfaces (S/stn building, boundary wall and other structures) shall have Texture finish of Make UTTPL (Ultratech Texture Paints Pvt. LTD) as per below detail:

- Building area: GRANITE ATELOI SA – 36-50% LIGHT
- Beam/ column: GRANITE ATELIO SA – PINK

Granito Attiloe:
Application Process:
Thickness 1.5- 1.8mm
1. Applying Priming coat of acrylic Primer mixed with wall sealer & water in the ratio of (1:1).
2. Repair check of plaster surface with Exterior grade cement mixed with Primer. (Whereas cement is provided by client on FOC basis).
3. First coat to obtain highly dense smooth appearance of 0.5 to .7 mm thick by applying over the primer to be applied with spray / trowel depends upon the
surface.
4. Second coat of 100% natural crushed granite material 0.8 to .9 mm thick by applying a
spray gun with a pressure of 2bhp to achieve desired finish.
5. Two coat of water base Protective.

6.9. False Ceiling

a) Providing and fixing false ceiling at all height including providing and fixing of frame work made of special sections, power pressed from M.S. sheets and galvanized with zinc coating of 120 gms/sqm (both side inclusive) as per IS : 277 and consisting of angle cleats of size 50mm length x 50 mm wide x 3.0 mm thick with flanges of at 1200 mm centre to centre, one flange fixed to the steel truss members and other flange of cleat fixed to the angle hangers of 50x50x3 mm of required length with nuts & bolts of required size and other end of angle hanger fixed with intermediate G.I. channels 45x15x0.9 mm running at the spacing of 1200 mm centre to centre, to which the ceiling section 0.5 mm thick bottom wedge of 80 mm with tapered flanges of 26 mm each having lips of 10.5 mm, at 450 mm centre to centre, shall be fixed in a direction perpendicular to G.I. intermediate channel with connecting clips made out of 2.64 mm dia x 230 mm long G.I. wire at every junction, including fixing perimeter channels 0.5 mm thick 27 mm high having flanges of 20 mm and 30 mm long, the perimeter of ceiling fixed to wall/partition with the help of rawl plugs at 450 mm centre, with 25mm long dry wall screws @ 230 mm interval, including fixing of gypsum board to ceiling section and perimeter channel with the help of dry wall screws of size 3.5 x 25 mm at 230 mm c/c, including jointing and finishing to a flush finish of tapered and square edges of the board with recommended jointing compound , jointing tapes , finishing with jointing compound in 3 layers covering upto 150 mm on both sides of joint and two coats of primer suitable for board, all as per manufacturer's specification and also including the cost of making openings for light fittings, grills, diffusers, cutouts made with frame of perimeter channels suitably fixed, all complete as per drawings, specification and direction of the Engineer in Charge .
12.0 mm thick tapered edge calcium silicate board is to be provided.(In control Room)

b) False ceiling in armstrong fine fissured butt edge tiles 595x595mm : Providing & fixing of armstrong fine fissured butt edge tile ceiling complete in all respects using armstrong channels, hangers etc. Item complete with all edge cut tiles and required cutting for lights, speakers, detectors, diffures, etc. Tile code-Armstrong fine fissured NF Butt edge (RH 99E)

c) False ceiling in gypsum board : P/F false ceiling, drops, ceiling " design in gypsum board. Providing and fixing at all heights false ceiling of 12.5MM thick tapered edge gypsum board confirming to IS: 2095 including providing and fixing of frame work made of special sections power pressed from MS Sheet and galvanized in accordance with Zinc coating 600 as per IS: 277 and consisting of angel cleats of size 25mm wide X 16mm thick with flanges of 22mm and 37mm at 1200 center to center one flange fixed to the ceiling with dash fastener 12.5mm DIA 40mm

6.10. Doors, Windows and ventilators

The details of doors and windows of the sub-station building shall be as under:

.

a) Steel door: Steel doors with Door Frames made with 1.5 mm (16 gauge) thick galvanized steel sheet pressed multi bend to S/L Rebate of Size 120 x 60 mm and Door Shutter shall be made with 18 gauge thick GI sheet pressed formed to provide a 46 mm thick fully flushed Door leaf skin panel shell with lock seam joint at stile edges and filled with Honey comb structure with metallic reinforcement at top, bottom and side surroundings. The item also includes the provision for required iron mongery and Powder coated Finish in RAL Color shades.
Each door leaf with 4 hinges (Make- Dauerhaft/ Hafele/ Equivalent), 1 no.of Door closure (make- Dauerhaft/ Hafele/ Equivalent), 1 no. of external trim (make- Dauerhaft/ Hafele/ Equivalent), , 1 no. Three Point Panic Bar (Make-Dauerhaft / Hafele/ equivalent) with necessary screws etc all complete.

b) Fire proof doors: Providing and fixing of Hollow metal fire rated doors as per IS 3614 part-1 & part-2 for stability and integrity. Pressed Galvanized steel confirming to IS 277 with the following specification. Recommended fire door should have been tested earlier of similar design at CBRI for maximum rating of 2hrs tested with vision panel of minimum 0.1 Sqmtr per shutter as requirement & application. Individual Test certificates should also be available for glass used in vision lites confirming the required fire ratings /panels being a part of the fire door assembly. Doors should be finished in Thermosetting Powder Coating desired RAL Shades. Manufacturer test certificate shall cover doors both single & double leaf doors and Hardwares should pass European certificate "CE" of conformity / UL with required fire ratings. Any deviation in specification and sheet thickness other than what is mentioned in the test certificates are not allowed. Proper label confirming the type of door and the hourly rating is mandatory. The manufacturer should be compliant to ISO 9001: 2008 and CE certified, manufacturer should be covered under IGBC scheme. Door frame shall be double rebate profile of minimum size 154mm X 77 mm made out of 1.60mm (16gauge) minimum thick galvanized steel sheet. NDRF 154x77 Frames shall be Butt jointed and field assembled with self bolted. The frames should be finished with Thermosetting Powder Coating in desired RAL Shade. All provision should be mortised, drilled and tapped for receiving appropriate hardware. Frames should be provided with back plate bracket and anchor fasteners for installation on a finished plastered masonry wall opening.
Door leaf shall be minimum 49mm thick fully flush double skin door with or without vision lite. Door leaf shall be manufactured from 1.25mm (18guage) minimum thick galvanised steel sheet. The internal construction of the door should be rigid reinforcement pads for receiving appropriate hardware. The infill material shall be Rockwool treated with Viper FRS 881 LH. All doors NSD 12049 shall be factory prepped for receiving appropriate hardware and provided with necessary reinforcement for hinges, locks, and door closers. The edges should be interlocked with a bending radius of 1.4mm. For pair of doors astragals has to be provided on the meeting stile for both active and inactive leaf. Vision lite wherever applicable should be provided as per manufacturers recommendation with a beeding and screws from inside.

However the glass should be contraflam Door Lite 11 mm clear 120 min fire rated and partially insulated (EW120), Non Wired Toughened, interlatered glass having a sound reduction of >37dB, LT of 86% and compliant to class 2(B)2 category of Impact Resistance as per EN 12600 standard from Saint Gobain.
Each door leaf with 4 hinges (Make- Dauerhaft/ Hafele/ Equivalent), 1 no.of fire rated Door closure (make- Dauerhaft/ Hafele/ Equivalent), 1 no. of external trim (make- Dauerhaft/ Hafele/ Equivalent), 1 Fire Rated Wired Glass(200x300mm), (Make-Pilkington/ equivalent), 1 no. Three Point Panic Bar (Make-Dauerhaft / Hafele/ equivalent) with necessary screws

c) Aluminium Doors, Windows & Ventilators: Aluminium doors, Windows & Ventilators are Powder coated Aluminium Hindalco/ Jindal or equivalent extruded sections (minimum 3.0 mm thick) as per IS 733 & 1285 for windows and ventilators (minimum thickness of powder coating 50 micron of approved colour). Glazing for windows and ventilators will be hermetically sealed double glazing (DGU) with (6+12+6) i.e. 06 mm clear toughened glass +12 mm air gap + 6 mm toughened Glass (Heat reflective colour glass).

Door/ Window frame	101.60x44.50x3.18mm Code: 20011(Jindal)
Door/ Window Shutter	83.50x44.45x3.18mm Code: 19583 (Jindal)
Door/Windows middle section	83.50x44.45x3.27mm Code: 19593 (Jindal)
Square Tube Inside window Beading	25x25x2mm
Beading in Doors	Code: 19377 (Jindal)
Ventilator frame	101.60x44.50x3.18mm Code: 20011(Jindal)
Ventilator Middle frame	101.60x44.50x3.18mm Code: 20010 (Jindal)
Ventilator outerside beading Angle	35x35x2mm
Square Tube Inside ventilator Beading	25x25x2mm

d) Doors in various rooms of control room building shall be as per detailed schedules given in Table – 1. All entrance doors at ground floor/ cellar shall be steel doors. Partition door between adjacent panel rooms shall be 2 hours fire rated

e) The details for all other doors and windows shall be as per finish schedule Table-I and tender Drawings with the relevant IS code.

f) Floor springs and hydraulic door closer of make Dorma or equivalent to be provided.

g) To maintain proper size of opening for doors and windows, contractor shall provide rough round Aluminum tube of size 40 x 20 mm around all opening before plaster work.

h)The contractor shall provide a door and window sill of granite stone of size 18-20 mm.

i) All windows at ground floor/ cellar shall be provided with MS Grill.

6.11. Internal Electrification

Electrical wiring shall be through heavy duty concealed conduits. All fixtures and wiring shall be of best quality and ISI marked. (Fixtures shall be provided as per provision of energy conservation act). Internal wiring shall include all fittings and fixtures, control panel boards, main switch MCB's, etc.

6.12. Plumbing & Sanitation

a) All plumbing and sanitation works shall be executed to comply with the requirements of the appropriate bye-laws, rules and regulations of the Local Authority having jurisdiction over such matters. The Contractor shall arrange for all necessary formalities to be met in regard to inspection, testing, obtaining approval and giving notices etc.

b) PVC sintex or equivalent make Roof water tank of adequate capacity depending on the number of users for 24 hours storage shall be provided. Minimum 2 Nos. 1000 liters capacity shall be provided.

c) CPVC pipes & Fittings shall be used for internal & external piping (both concealed) work for potable water supply.

d) UPVC pipes shall be used for sanitary works above ground level.

e) Each toilet shall have minimum fittings

i) Wall Hung Water closet (European type W.C. pan) Jaquar/Kohler as per approval of Engineer In charge

ii) Half Stall Urinal (580 x 380 x 350 mm) Jaquar/Kohler as per approval of Engineer Incharge

iii) Counter top Wash basin (630 x 450 mm) Jaquar/Kohler as per approval of Engineer Incharge

iv) Bathroom mirror (600 x 450 x 6 mm thick) hard board backing

v) CP brass towel rail (600 x 20 mm) with C. P. brass brackets.

vi) Soap holder and liquid soap dispenser.

f) Water cooler for drinking water with adequate water storage facility shall be provided and located near control room instead of near toilet block.

g) 1 No stainless steel A ISI 304(18/8) kitchen sink with Drain board (510 x 1040 x 225mm bowl depth as per IS 13893 for pantry shall be provided complete with all fittings

h) All fittings, fastener, grating shall be chromium plated.

i) All sanitary fixtures and fittings shall be of approved quality and type manufactured by well known manufacturers. All items brought to site must bear identification marks of the type of the Manufacturer.

j) Soil, waste and drain pipes, for underground works shall be UPVC Pipes for areas not subject to traffic load. Heavy-duty cast iron pipes/ RCC NP-04 Pipes shall be used otherwise.

7.0 STORM WATER DRAINAGE FOR CONTROL ROOM BUILDING

The building drain shall be provided for the collection of storm water from the roofs. This water shall be collected in chambers and these chambers shall drain to the main drainage system of the station which shall in turn be connected to rain water harvesting recharge pits. Overflow of RWH Pits shall be connected to main drain

G.I Pipes of 150 MM dia rain water down comers shall be provided to drain off the rain water from the roof.. The number and size of down comers shall be governed by IS:1742 and IS:2527. Pipe will be covered by making suitable arrangement in structure and to be matched with external Finishes.

All external drains shall be covered with precast perforated RCC covers of suitable size and thickness.

For all buildings, suitable arrangement for draining out water collected from equipment blow down, leakages, floor washings fire fighting etc. shall be provided for each floor.

8.0 DEVELOPMENT OF YARD

8.1. Scope

8.1.1. The Contractor shall furnish all labour, equipments and materials required for complete performance of the work in accordance with the drawings, specifications and direction of the Owner.

8.1.2. Stone spreading shall be done in the Outdoor Sub-Station Yard area, Power Transformer, Capacitor Bank and wherever equipments and structures are to be provided under the present scope of work.

General Requirement:

The material required for site surfacing / stone filling shall be free from all types of organic materials and shall be of standard quality and as approved by the Owner.

Test for aggregates should be as follows:

a) Sieve Analysis limits (Gradation)

As per IS: 383-1970

The material to be used for stone filling / site surfacing shall be uncrushed / crushed / broken stone of 20 mm nominal size (ungraded single size) conforming to Table 2 of IS:383 - 1970.

Sieve Analysis (Gradation):
(IS: 383 - Table - 2)

Sieve size	% passing by weight
40mm	100
20mm	85-100
10mm	0 – 20
4.75mm	0-5

One test shall be conducted for every 50 cum.

b) Hardness:

Abrasion value (IS: 2386 Part-IV) - not more than 40%
Impact value (IS: 2386 Part-IV) - not more than 30% and frequency shall be one test per

50 cum with a minimum of one test per source

c) Flakiness Index

As per IS: 2386 Part I

8.1.3. Before taking up the final yard treatment, anti-weed treatment shall be applied in the switchyard area wherever yard treatment is to be done, and the area shall be thoroughly de-weeded including removal of roots. The recommendation of local agriculture or horticulture department shall be sought wherever feasible while choosing the type of chemical to be used. Nevertheless the effectiveness of the chemical shall be demonstrated by the contractor in a test area of 10M x 10M (approx.) and monitored over a period of two to three weeks by the Engineer-in-Charge. The final approval shall be given by Engineer-in-Charge and final approval given based on the results.

8.1.4. The anti-weed chemical shall be procured from reputed manufacturers. The dosage and application of chemical shall be strictly followed as per manufacturer's recommendation. The contractor shall be required to maintain the area free of weeds for a period of 1 year from the date of application of 1st dose of anti-weed chemicals

8.1.5. After all the structures/equipments are erected and anti-weed treatment is complete, the surface of the substation area shall be maintained, rolled/compacted to the lines and grades as decided by Engineer-in-Charge. De-weeding including removal of roots shall be done before rolling is commenced. Engineer-in-Charge shall decide final formation level so as to ensure that the site appears uniform free from undulations. The final formation level shall however be very close to the formation level using manual or machine roller with suitable water sprinkling arrangement to form a smooth and compact surface.

8.1.6. After anti-weed treatment & compaction of earth, final yard treatment shall be Carried out in the 4 layers as follows:

a. Providing and laying in position 75mm thick base layer of cement concrete 1:5:10 (1 cement: 5 coarse sand : 10 brick aggregate 40mm nominal size).

b. Flat brick flooring with over burnt bricks /class designation 100 as per approval of BRPL on the bed of 12 mm thick cement mortar 1:6 (1 cement : 6 coarse Sand) and filling the joints 12mm thick all around the bricks with same mortar.

c. Over the flat brick flooring a layer a final surface course of minimum 100 mm thickness of 20 mm nominal size (single size ungraded) broken stone shall be spread and uniformly leveled.

8.1.7. In areas that are considered by the Engineer-in-Charge to be too congested with foundations and structures for proper rolling of the site surfacing material by normal rolling equipments i.e., clear space between any 02 adjacent structures/foundation less than 01 meter, these adjoining structures/foundations shall constructed as a monolithic structure.

8.1.8. The sub grade shall be in moist condition at the time the cement concrete is placed. If necessary, it should be saturated with water for not less than 6 hours but not exceeding 20 hours before placing of cement concrete. If it becomes dry prior to the actual placing of cement concrete, it shall be sprinkled with water and it shall be ensured that no pools of water or soft patches are formed on the surface.

9.0 SUB-STATION TRENCHES

9.1. The cable trenches and precast removable RCC cover (with lifting arrangement) shall be constructed using RCC of minimum grade M25.

9.2. The RCC cable trench walls and raft shall not be less than 150 mm thick.

9.3. The cable trench wall shall be designed for the following loads.

- Dead load of 155 kg/m length of cable support + 75 Kg on one tier at the end.(Wall thickness Minimum-150 mm)
- Triangular earth pressure + uniform surcharge pressure of 2T/m2.

9.4. Cable trench covers shall be 50 mm thick. All trench covers/ drain covers shall have desired IRC Mesh of size 75x25mm (wire size 6 gauge/ 7.75 kg/m2) welded to M.S. frame of angle 50 x 50 x 6 mm all round the cover. Size of covers shall be as per site requirement / direction of Engineer in Charge.

9.5. Size of covers shall be per site requirement / direction of Engineer In Charge.

9.6. All cable trenches inside the buildings shall have covers comprising of 6 mm thick chequered plates fixed on angle 40 x 40 x 5 mm frame with arrangement of MS holes for lifting of cover.

9.7. Cable trench crossing the road/rails shall be designed for class AA loading of IRC/relevant IS Code and should be checked for transformer/reactor loading.

9.8. Trenches shall be drained. Necessary sumps be constructed and submersible sump pumps with stand by arrangement shall be supplied/ installed. Cable trenches shall not be used as storm water drains.

9.9. The top of cable trench shall be such that the surface rain water does not enter the trench.

9.10. All metal parts inside the trench shall be connected to the earthing system.

9.11. The trench bed shall have a perpendicular to the run. Trench wall shall not foul with the foundation. Suitable clear gap shall be provided.

9.12. The trench bed shall have a slope of 1/500 along the run & 1/250 perpendicular to the run.

9.13. All the construction joints of cable trenches i.e. between base slab to base slab and the junction of vertical wall to base slab as well as from vertical wall to wall and all the expansion, joints shall be provided with approved quality PVC water stops of approx. 230 x 5 mm size for those sections where the ground water table is expected to rise above the junction of base slab and vertical wall of cable trenches.

9.14. Cable trenches shall be blocked at the ends if required with brick masonry in cement sand mortar 1:6 and plaster with 12mm/15mm thick 1:4 cement sand mortar.

9.15. Construction of Cable Trench 11Kv & 66Kv upto the plot boundary wall shall be in the scope of Vendor.

10.0 SUB-STATION DRAINAGE SYSTEM

Adequate site drainage system shall be provided by the Contractor. The Contractor shall design the storm water drainage system covering all culverts, ditches, drains, etc. The run off shall be calculated on the basis of maximum rainfall intensity that is likely to occur over the catchment area in one hour period on an average of once in ten years. The surface of the site shall be sloped to prevent the ponding of water. Outfall of drainage shall be suitably connected to rainwater harvesting recharge pits. While designing the drainage system following points shall be taken care of:

1. The maximum velocity for pipe drains and open drains shall be limited to 2.4m/sec and 1.8m/sec respectively. However, minimum non-silting velocity of 0.6m/sec shall be ensured. Longitudinal bed slope not milder than 1 in 1000 shall be provided.

2. For design of RCC pipes for drains and culverts, IS: 456 and IS: 783 shall be followed.

3. The Contractor shall ensure that water drains are away from the site area and shall prevent damage to adjacent property by this water. Adequate protection shall be given to site surfaces, roads, ditches, culverts, etc. to prevent erosion of material by water.

4. For pipe drains, concrete pipe of class NP3 shall be used. However, for road crossings etc. higher strength pipe of class NP4 shall be provided. For rail crossings, pipes conforming to railway loading standards or at least NP4 class shall be provided. Manholes shall be provided at every 30m interval, at connection points and at every change of alignment.

5. Pipe drains shall be connected through manholes at an interval of maximum 15mtrs. Effluents shall be suitably treated by the Contractor to meet all the prevalent statutory requirements and local pollution control norms and treated effluents shall be conveyed to the storm water drainage system at a suitable location for its final disposal.

6. All internal site drainage system, including the final connection/disposal to rainwater harvesting recharge pits shall be part of Contractor's scope including all required civil work, mechanical & electrical systems. The Contractor shall connect drain(s) at one or more points to rainwater harvesting recharge pits as feasible at site. The drainage layout of the substation shall be approved by the Owner & all works shall be carried out by the Contractor.

7. The drainage scheme and associated drawings shall be got approved from the Owner.

11.0 SUB-STATION ROAD

11.1. Inside substation roads to be provided for access along with car parking for at least three cars and two wheeler parking for three vehicles. Building, Roads and parking are in the scope of bidder. Layout of the roads shall be based on layout drawing for the substation. Parking areas shall be provided for Site personnel and visitors as per layout drawing. Adequate turning space for vehicles shall be provided and bend radius shall be set accordingly. It has to be connected suitably with roads.

11.2. All substation roads shall be constructed so as to permit transportation of all heavy equipment up to 60MT. The main approach roads upto Control Room Building and other relevant roads will be RCC/ Cement Concrete Roads. The other connecting roads and pathways shall be of Paver blocks/ CC Road as per site requirement. The pavers blocks used for the roads shall be minimum 80mm thick with compressive strength not less than 450Kg/cm2.

11.3. Road construction shall be as per IRC standard.

11.4. Adequate provision shall be made for road drainage.

11.5. All the culverts and its allied structure (required for road/rail, drain trench crossings etc.) shall be designed for class AA loading as per IRC standard/IS code.

TRANSFORMER FOUNDATION, RAIL TRACK/ ROAD CUM RAIL TRACK

11.6. The Contractor shall provide a permanent transfer track system integrated with the power transformer foundation to enable installation and replacement of any failed unit by the spare unit located at the site. The transfer track system shall be suitable to permit the movement of any failed unit fully assembled with integral radiators and oil, without the de-energization of any other equipment in the station. This system shall enable the removal of any failed unit from its foundation to a repair area and the installation of the spare unit. This system, preferably, shall not interfere with the normal internal road and trench system. If trench/ drain crossings are required then suitable RCC culverts shall be provided in accordance with I.R.C Code/ relevant IS.

11.7. Rail track to be provided for all PTR foundations upto Grid Main Entry gate and shall be minimum of RCC M-25 grade. The space between the tracks shall be suitably filled with Concrete M-25. up to the formation level.. Suitable drainage system between the tracks shall be provided.

11.8. The rails shall be of first quality 52 kg/m medium manganese steel as per Indian Railway specification T-12-64 and its subsequent revision, joined together by fish plates as per Indian Railway specification T-1/57 and their drawing no. 090M and 27mm diameter fish bolts. No joint shall be provided at less than L/3 of the longest part.

11.9. The grating shall be made of MS flat of size 50mmx 5mm placed at 30mm center to center welded inclined (sideways) at an angle of 45-60 degrees from horizontal axis and 25mmx5mm MS flat at a spacing of 150mm at right angle to each other. Maximum length of grating shall be 1500mm and width shall not be more than 500mm. The gratings supported on ISMB 150mm shall be placed at the formation level and will be covered with 100mm thick layer of broken/crushed/non-crushed stone having size 40mm to 60mm which acts as an extinguisher for flaming oil.

12.0 OIL RECOVERY & BURNT OIL TANK

12.1. The oil recovery system shall be provided for all transformers (containing insulating oil or any flammable or polluting liquid) in order to avoid spread of fire by the oil and for environmental protection.

12.2. Each transformer including oil conservator tank and cooler banks etc. shall be placed in a transformer pit surrounded by retaining walls (pit walls). The clear distance of the retaining wall from the transformer shall be 20% of the transformer height or 0.8m whichever is more. The transformer pit thus formed shall have a capacity equal to volume of oil in the transformers. The MS grating placed at the formation level shall be covered with 100mm thick gravel of 40mm nominal size which acts as an extinguisher for flaming oil.

12.3. Each transformer pit shall be drained towards a sump pit whose role is to recover the infiltrating water

and the drained oil from the pit. The sump pit shall have sufficient capacity to receive without overflowing the oil content of large transformers plus the water content of any fixed fire fighting system and a certain quantity of rain water collected from the pit connected to it. The system shall be provided with air vents large enough to avoid over- pressure during operation. The whole internal surface of the sump pit should be impermeable.

12.4. The retaining walls which make up the transformer pit shall be made of reinforced cement concrete, with minimum grade of concrete as M-25.

12.5. The floor of the transformer pit shall be of Reinforced cement concrete of grade M25.

12.6. A Device showing level of sump pit shall be fitted along with the automatic submersible pumping system, which shall have sufficient capacity to evacuate the fire fighting & rainwater from the sump pit..

12.7. If the heights of the retaining wall which form the transformer pit exceed 60cm, steps shall be provided to facilitate access to the transformer and reactor.

12.8. When designing the transformer pit, the movement of the transformer must be taken into account.

12.9. It must be assured that the coefficient of crushed stone (granular material) penetration which fills the transformer pit will be retained regardless of the climatic conditions.

13.0 FIRE PROTECTION WALLS

13.1. General

13.1.1. Fire protection walls shall be provided, wherever required, in accordance with Tariff Advisory Committee (TAC) and certifying all mandatory safety clearances.

13.2. Material

13.2.1. The firewall shall be made up of reinforced cement concrete (at least M-25 grade) as per the system requirements. Materials used must conform to the standards of the National Fire Prevention Association & TAC Norms.

13.3. Fire Resistance

13.3.1. The firewall shall have a minimum fire resistance of 3 hours. The partitions, which are made to reduce the noise level of the transformers, shall have the same fire resistance where the partitions are also used as firewalls. The walls of the building, which are used as firewalls, shall also have a minimum fire resistance of 3 hours.

13.3.2. The firewall shall be designed to protect against the effect of radiant heat and flying debris from an adjacent fire.

13.4. Dimensions

13.4.1. The barrier shall extend at least 500 mm above the transformer bushing and pressure relief vent and length wise 600 mm beyond the transformer including any radiators and tap changer enclosure.

13.4.2. These dimensions might be reduced in special cases, as per the approval of owner where

there is lack of space. A minimum of 2.0 meter clearance shall be provided between the Equipments e.g. Autotransformer/Power transformer.

13.4.3. The building walls, which act as firewalls, shall extend at least 1 m above the roof in order to protect it. Building wall adjacent to transformer shall act as fire resistance wall and shall be made up of solid concrete blocks

13.5. Mechanical Resistance

13.5.1. The firewall shall have the mechanical resistance to withstand local atmosphere conditions. If this wall shall serve as a support for equipment such as insulators etc, it mechanical rigidity must be increased. Connecting the walls by steel or other structures which may produce a reversing torque if overheated shall be avoided.

14.0 DESIGN CONSIDERATION FOR FOUNDATION

14.1. General

14.1.1. Work covered under this Clause of the Specification comprises the design and construction of foundations and other RCC constructions for switchyard structures, equipment supports, trenches, drains, jacking pad, pulling block, control cubicles, bus supports, Power transformer/Reactors, marshalling kiosks and auxiliary equipments, tanks or for any other equipment or service and any other foundation required to complete the work. This clause is as well applicable to the other RCC constructions.

14.1.2. Concrete shall conform to the requirements mentioned in IS: 456 and all the tests shall be conducted as per relevant Indian Standard Codes as mentioned in Standard field quality plan appended with the specification. A minimum grade of M25 concrete shall be used for all structural/load bearing members as per latest IS: 456 (latest revision).

14.1.3. If the site is sloppy, the foundation height will be adjusted to maintain the exact level of the top of structures to compensate such slopes.

14.1.4. The switchyard foundation's plinths shall be minimum 300mm above finished yard level.

14.1.5. Minimum 100mm thick lean concrete (1:4:8) shall be provided below all underground structures, foundations, trenches etc. to provide a base for construction.

14.1.6. Concrete made with Ordinary Portland cement shall be carefully cured and special importance shall be given during the placing of concrete and removal of shuttering.

14.1.7. The design and detailing of foundations shall be done based on the approved soil data and sub-soil conditions as well as for all possible critical loads and the combinations thereof. The Spread footing or pile foundation as may be required based on soil/sub-soil conditions and superimposed loads shall be provided.

14.1.8. If pile foundations are adopted, the same shall be cast-in-situ driven/bored or precast or under reamed type as per relevant. parts of IS Code 2911. Only RCC piles shall be provided. Suitability of the adopted pile foundations shall be justified by way of full design calculations. Detailed design calculations shall be submitted by the bidder showing complete

details of piles/pile groups proposed to be used. Necessary initial load test shall also be carried out by the bidder at their cost to establish the piles design capacity. Only after the design capacities of piles have been established, the Contractor shall take up the job of piling. Routine tests for the piles shall also be conducted. All the work (design & testing) shall be planned in such a way that these shall not cause any delay in project completion. The contractor shall go for vertical load testing or lateral load testing. The contractor may choose static or dynamic load testing upon site condition and time constraint.

14.2. Design

14.2.1. All foundation shall be of reinforced cement concrete. The design and construction of RCC structures shall be carried out as per IS: 456 and minimum grade of concrete shall be M-25.

14.2.2. Limit state method of design shall be adopted unless specified otherwise in the specification.

14.2.3. For detailing of reinforcement IS: 2502 and SP: 16 shall be followed. TMT bars conforming to IS: 1786 shall be used as reinforcement. However, in specific areas mild steel (Grade I) conforming to IS: 432 can also be used. Two layers of reinforcement (on inner and outer face) shall be provided for wall & slab sections having thickness of 125 mm and above. For footings minimum cover shall be 50 mm.

14.2.4. RCC water retaining structures like storage tanks, etc. shall be designed as uncracked section in accordance with IS: 3370 (Part I to IV) by working stress method. However, water channels shall be designed as cracked section with limited steel stresses as per IS: 3370 (Part I to IV) by working stress method. Joints on each concrete lift shall be provided with approved quality PVC water stops of approx. 230 x 5 mm size to avoid water seepage through those joints

14.2.5. The procedure used for the design of the foundations shall be the most critical loading combination of the steel structure and or equipment and/or superstructure and other conditions, which produces the maximum stresses in the foundation or the foundation component and as per the relevant IS Codes of foundation design. Detailed design calculations shall be submitted by the bidder showing complete details of piles/pile groups proposed to be used.

14.2.6. Design shall consider any sub-soil water pressure that may be encountered following relevant standard strictly.

14.2.7. Necessary protection to the foundation work. If required shall be provided to take care of any special requirements for aggressive alkaline soil. Black cotton soil or any other type of soil which is detrimental / harmful to the concrete foundations.

14.2.8. RCC columns shall be provided with rigid connection at the base. All columns shall be interconnected with RCC beams at Footing Level from all possible Directions/Suitable size raft footing will be provided.

14.2.9. All sub-structures shall be checked for sliding and overturning stability during both construction and operating conditions for various combinations of loads. Factor of safety for these cases shall be taken as mentioned in relevant IS Codes as stipulated elsewhere in the Specifications. For checking against overturning, weight of soil vertically above footing shall

be taken and inverted frustum of pyramid of earth on the foundation should not be considered.

14.2.10. Earth pressure for all underground structures shall be calculated using coefficient of earth pressure at rest. Co-efficient of active or passive earth pressure (whichever is applicable). However, for the design of substructures of any underground enclosures, earth pressure at rest shall be considered.

14.2.11. In addition to earth pressure and ground water pressure etc., a surcharge load of 2T/Sq.m shall also be considered for the design of all underground structures including channels, sumps, tanks, trenches, and substructure of any underground hollow enclosure etc, for the vehicular traffic in the vicinity of the structure.

14.2.12. Following conditions shall be considered for the design of water tank in pumps house, channels, sumps, trenches and other underground structures:

a) Full water pressure from inside and no earth pressure, ground water pressure & surcharge pressure from outside (application only to structures, which are liable to be filled up with water or any other liquid).

b) Full earth pressure, surcharge pressure and ground water pressure from outside and no water pressure from inside.

c) Design shall also be checked against buoyancy due to the ground water during construction and maintenance stages. Minimum factor of safety of 1.5 against buoyancy shall be ensured ignoring the superimposed loadings.

14.2.13. Base slab of any underground enclosure shall also be designed for empty condition during construction and maintenance stages with maximum groundwater table (GWT). Minimum factor of safety of 1.5 against buoyancy shall be ensured ignoring the super-imposed loadings.

14.2.14. Base slab of any underground enclosure like water storage tank shall also be designed for the condition of different combination of pump sumps being empty during maintenance stages with maximum GWT. Intermediate dividing piers of such enclosures shall be designed considering water in one pump sump only and the other pumps sump being empty for maintenance.

14.2.15. The foundations shall be proportioned so that the estimated total and differential movements of the foundations are not greater than the movements that the structure or equipment is designed to accommodate.

14.2.16. The foundations of transformer shall be of block type foundation. Minimum reinforcement shall be governed by IS: 2974 and IS: 456.

14.2.17. The equipment foundations shall be checked for a factor of safety of 2.2 for normal condition and 1.65 for short circuit condition against sliding, overturning and pullout. The same factors shall be used as partial safety factor over loads in limit state design also.

14.3. Admixture & Additives

14.3.1. Only approved admixtures shall be used in the concrete for the Works. When more than one admixture is to be used, each admixture shall be batched in its own batch and added to the mixing water separately before discharging into the mixer. Admixtures shall be delivered in suitably labeled containers to enable identification.

14.3.2. Admixtures in concrete shall conform to IS: 9103. The waterproofing cement additives shall conform to IS: 2645. Owner shall approve concrete Admixtures/ Additives.

14.3.3. The contractor may propose and the Owner may improve the use of a water-reducing set-retarding admixture in some of the concrete. The use of such an admixture will not be approved to overcome problems associated with inadequate concrete plant capacity or improperly planned placing operation sand shall only be approved as an aid to overcoming unusual circumstances and placing conditions.

14.3.4. The water-reducing set-retarding admixture shall be an approved brand of Ligno-sulphonate type admixture.

14.3.5. The waterproofing cement additives shall be used as required/advised by the Owner.

14.3.6. Water proofing treatment on roof shall be as per Item No 22.7.1 - DSR 2012.

15.0 FENCING OF SUB-STATION (LIVE PART) AREA

15.1. General

Fencing shall be designed for the most critical loading combination taking care of wind force, stability, tension on wires, minimum requirements as per this clause for are materials IS 8910 and fabrication IS 800 as per recommendations

15.2. Areas Requiring Fencing

15.3. Fencing shall be providing for the following areas:

15.3.1. Site fencing for the complete Outdoor substation Yard area including Power transformer area. Gates shall be provided for men and machine / equipment to be taken out of the substation.

15.3.2. The IRC weld mesh Panels fencing of Capacitor Bank with roof cover (as per approved BRPL pattern).

15.3.3. Fencing of Aux. Substation Transformer (as per approved BRPL pattern).

15.4. Product Material

15.4.1. The minimum requirements are as follows:
IRC Weld Mesh fencing in accordance to relevant IS Code

- Size of IRC mesh 25X75mm
- Nominal wire size 6 gauge/ 7.75 kg/m2
- Width of fencing panel 2400mm
- Height of fencing 2000mm

- Fabrication of panels — 40mm Nominal bore M.S. Pipe (medium duty). Providing elbow/bend at corners & 40 x 5 mm M.S. flats in beading
- Paint — Aluminum Paint

15.4.2. Posts

- Intermediate Straining Post : 65mm Nominal bore, M.S. Pipe (Medium duty)
- Base Plate : 12mm M.S. Plate with 4 nos of hole. Nuts & bolts of suitable diameter.
- Paint : shall be painted with a coat of approved steel primer and two coats of synthetic enamel paint

The IRC weld mesh Panels shall be fixed to the post at the top and bottom of the 65mm Nominal bore, M.S. Pipe by Nuts and bolts. The Intermediate straining Posts to be erected by using holding down bolts and nuts grouted in toe wall around the Yard (the height of Yard) Posts shall be set in 1:1.5:3 Reinforced cement concrete blocks of minimum dimension (340 mm x 340 mm x 750 mm deep) and Toe wall to be at least 450 mm below & 450 mm above the yard level and 340 mm wide matched with External facade of the building(Grit-wash).

15.5. Installation

15.5.1. Fence shall be installed along switchyard line.

15.5.2. Post holes shall be excavated by approved methods.

15.5.3. Intermediate posts shall be spaced 2.5 m apart measured parallel to ground surface.

15.5.4. Concrete work shall conform to relevant clause. Post shall be braced and held in plumb position and true alignment and elevation until concrete has set.

15.5.5. Fence fabric shall not be installed until concrete has cured a minimum of 7 days.

15.5.6. Bottom and top of the fence panels shall be fixed with post by MS flats of 50 mm x 6 mm (min).

15.5.7. Toe wall of Brick masonry, with notches over 100 mm thick PCC (1:4:8) shall be provided below all fencing and shall be minimum 450 mm above and 450 mm below finished ground level. All exposed surfaces of brick toe wall shall be finished with Grit plaster/Matched with Building façade.

15.6.

15.7. M.S. Gate

15.7.1. M.S. Gate of 6.0 m wide x 2.3 m height (2 nos) and 1.55 m x 2.3 m height (1 no) shall be provided to provide access through the fencing to the yard. M.S. Gate of 6.0 m wide x 2.3 m height shall be made in two leaf and 1.55 m x 2.3 m height shall be made in one leaf with locking arrangements. The gate shall be made with outer frame of 40 NB (Medium) M. S.

Pipe. Weld mesh of opening size 25 x 75 mm and nominal wire size of mesh is 6 gauge/ 7.75 kg/m2 (as per standard approved drawing of BSES).

15.7.2. Hinges, al-drops and other accessories shall be provided for effective working of the gate.

16.0 GATES

16.1. The gates shall be fabricated with welded joints to achieve rigid connections. The gate frames shall be painted with one or more coat of approved steel primmer and two coats of synthetic enamel paint.

16.2. Gates shall be fitted with approved quality iron hinges. Hinges shall permit gates to swing through 180 degree.

16.3. Gates shall be fitted with galvanized chain hook or gate hold back to hold gates open. Double gates shall be fitted with centre rest and drop bolt to secure gates in closed position.

16.4. Main Gate shall be at least 6m wide. Gates shall be installed in locations shown on drawings. Next to the main gate, a small gate (1.25 m wide, single leaf) within main gate shall also be provided as a wicket gate.

16.5. Bottom of main gates (both at entry and exit) shall be set approximately 40mm above ground surface with necessary guiding mechanism i.e., wheels at bottom along with a track allowing its smooth movement on floor shall be fitted as per site requirement.

16.6. The gates shall be provided with suitable locking arrangement.

17.0 MISCELLANEOUS GENERAL REQUIREMENTS

17.1. Dense concrete with controlled water cement ratio as per IS-code shall be used for all underground concrete structures such as pump-house, tanks, water retaining structures, cable and pipe trenches etc. for achieving water tightness.

17.2. All joints including construction and expansion joints for the water retaining structures shall be made water tight by using PVC ribbed water stops with central bulb. However, kicker type (externally placed) PVC water stops shall be used for the base slab and in other areas where it is required to facilitate concreting. The minimum thickness of PVC water stops shall be 5 mm and minimum width shall be 230 mm.

17.3. All mild steel parts used in the water retaining structures shall be hot-double dip galvanized. The minimum coating of the zinc shall be 610 gm/sqm. for galvanized structures and shall comply with IS:2629 and IS:2633. Galvanizing shall be checked and tested in accordance with IS:2633. The galvanizing shall be followed by the application of an etching primer and dipping in black bitumen in accordance with IS:3416.

17.4. A screed concrete layer not less than 100 mm thick and of grade not weaker than M10 conforming to IS: 456 shall be provided below all water retaining structures. A sliding layer of bitumen paper or craft paper shall be provided over the screed layer to destroy the bond between the screed and the base slab concrete of the water retaining structures.

17.5. Bricks having minimum 100 kg/cm2 compressive strength can only be used for masonry work. Contractor shall ascertain himself at site regarding the availability of bricks of minimum 100 kg/cm2 compressive strength before submitting his offer.

17.6. Doors and windows on external walls of the building (other than areas provided, with insulated metal claddings) shall be provided with RCC sunshade over the openings with 150 mm projection on either side of the openings. Projection of sunshade from the wall shall be minimum 600mm over window & door openings.

17.7. RCC staircase shall be provided for access to roof of the building. All stairs shall have maximum riser height of 150 mm and a minimum tread width of 300 mm Minimum width of stairs shall be 1500 mm. Steel doors shall be provided in the Mumty and height of Mumty should be at least 2.6m.

17.8. Angles 50x50x6 mm (minimum) with lugs shall be provided for edge protection all round cut outs/openings in floor slab, edges of drains supporting covers, edges of RCC cable/pipe trenches supporting covers, edges of manholes supporting covers, supporting edges of manhole precast cover and any other place where breakage of comers of concrete is expected.

17.9. Anti termite chemical treatment shall be given to column pits, wall trenches, foundations of buildings, filling below the floors etc. as per IS: 6313 and other relevant Indian Standards.

17.10. All reinforcement in RCC structures and structural steel members shall be of make TATA/ SAIL/Jindal or equivalent.

17.11. The railing of staircase shall be 0.9 m average height comprising of stainless steel (Grade 304) Jindal Make member minimum 3 mm thick made of Hollow tubes, channels, plates etc., including welding, grinding, buffing, polishing and making curvature (wherever required) and fitting the same with necessary stainless steel nuts and bolts complete, i/c fixing the railing with necessary accessories & stainless steel dash fasteners , stainless steel bolts etc., of required size, on the top of the floor or the side of waist slab with suitable arrangement as per approval of Engineer-in-charge.

17.12. Loading/Unloading Platform stainless steel (Grade 304) Jindal make Balcony Railing hollow pipe 80x40x3 mm hand rail, horizontal pipes 40x20x3 mm .

17.13. All underground water retaining concrete structures shall have water proofing cement Plaster additive conforming to IS: 2645 water proofing for walls and base slab of all underground concrete structures like basements pump houses etc. shall be by "Injection Method".

17.14. All buildings shall have 750mm wide plinth protection all round.

17.15. Providing Fixing of Granite (Tan brown shade) to all Periphery of s/stn building 1000 mm above from Road level to give aesthetical look as per EIC shall be in scope of vendor.

17.16. Monorails, Monorail girders and fixtures shall be provided by the Bidder wherever required.

17.17. All foundations embedment, inserts, blockouts required for equipments shall be provided by bidder.

17.18. 50mm thick DPC shall be provided before laying of masonry (item no. 4.11 & 4.13-DSR 2012).

17.19. BSES Display board is to be provided of required size (3.0mx1.20m) and as per approved pattern /drawing of BRPL with name of the grid- ACP sheet signage with reverse 2D matter with LED Module Light having Automatic Timer on & off System.

17.20. Water and Sewer line connections to be done along with approval of CIVIC agency.

17.21. The details given in tender drawings shall be considered along with details available in this section of the specification while deciding various components of the building.

17.22. Balance Plot area should be covered with CC pavement/Pavers as per EIC

Items/components of buildings not explicitly covered in the specification but required for completion of the project shall be deemed to be included in the scope

18.0 INTERFACING

The proper coordination & execution of all interfacing civil works activities like fixing of conduits in roofs/walls/floors, fixing of lighting fixtures, fixing of supports/ embedments, provision of cutouts etc for indoor illumination, ventilation & Air conditioning shall be the sole responsibility of the Contractor. He shall plan all such activities in advance and execute in such a manner that interfacing activities do not become bottlenecks and dismantling, breakage etc. is reduced to minimum

19.0 FIELD QUALITY PLAN FOR CIVIL WORKS

The field quality plan for all civil works shall be in accordance with CPWD specification and other relevant Indian Standard Codes. All quality checks and procedures shall be followed as per relevant CPWD norms.

20.0 WATER SUPPLY

20.1. Water for construction work as well as drinking purpose shall be in the scope of Contractor.

20.2. The Contractor shall carry out all the plumbing/erection works required for supply of water in control room building.

20.3. A scheme shall be prepared by the Contractor indicating the layout and details of water supply which shall be got approved from the Owner before actual start of' work including all other incidental items not shown or specified but as may be required for complete performance of the works.

20.4. Either Bore-well or Connection from respective owners/DJB water source along with required pumps for water supply shall be in the scope of contractor. Although contractor shall provide an underground water reservoir, near the gate of minimum 20 M3 or sufficient capacity for refill of one fire Tanker. The water reservoir shall be provided with a high-pressure pump and single point fire hydrant outlet for refilling the fire tender in case of fire and emergency with proper waterproofing treatment & ceramic tiles finish on walls & Floor. Necessary valve shall be provided in the outlet.

20.5. The details of tanks, pipes, fittings, fixtures etc for water supply shall be approved by engineer in charge.

21.0 SEWERAGE SYSTEM

21.1. Sewerage system shall be provided for control room building.

21.2. The Contractor shall construct septic tank and soak pit suitable for 20 users or make connection with nearby existing sewerage system of Civic agencies/respective owners.

21.3. The system shall be designed as per relevant IS Codes.

21.4. External sewerage system including connection with internal services of building shall be within the scope of this contract. The connection and laying of sewer lines and manholes upto the point of connection with the sewer line of local civic agency if existing within 100m from any point of boundary of sub-station. If the sewer line of local civic agency does not exist in the area then septic tank with soak pit shall be constructed for control room building (suitable for 20 users). Vendor shall obtain necessary approval from civic agency for laying of sewer lines as aforesaid and connection thereof. Any municipal charges for approval and connection shall be paid by BRPL directly to the local authorities.

22.0 RAIN WATER HARVESTING

(a) Providing two recharge structures with bore wells at different locations as per approved drawing for rainwater harvesting system. The recharge structures shall be suitably located within the sub-station. Branch drains from the main drain carrying rainwater from entire switchyard, constructed in accordance with clause 9 & 10 shall be connected to the recharge structures.

(b) The internal dimensions of recharge shafts shall be 3.0 m X 2.5 m with 230mm thick lining of brick work upto a depth of 2.0 meter from Finished Ground level and 345mm thick brickwork below 2.0 meter depth. The brickwork shall be constructed with cement mortar 1:6 (1cement: 6 coarse sand). The overall depth of shaft shall be 3.0 meter below invert level of drain. The shaft shall be covered with RCC slab for a live load of 300 kg. per sqm. Two openings of size 0.7 x 0.7 meter shall be provided in the RCC cover slab. An iron cover made of 5mm thick chequered plate with hinges shall be provided on the openings. Galvanized M.S. rungs of 16mm diameter at spacing of 300 mm shall be provided in the wall of shaft below the opening in the RCC slab to facilitate cleaning of shaft.

(c) A 300 mm diameter bore well shall be drilled in the centre of the shaft. The depth of bore well shall be 5.0 meter more than the depth of sub soil water.

(d) A 100 mm diameter medium duty MS pipe conforming to IS: 1161 shall be lowered in the bore well keeping bail plug towards bottom of bore well. The pipe shall have 1.58mm holes for 4.0 meter length starting from 1.0 meter from bottom of bore well. Holes of 3.0mm diameter shall be provided for a length of 2.0 meter starting from the bottom level of coarse sand and down wards. The overall length of pipe shall be equal to total depth of bore well plus depth of shaft.

(e) Gravel of size 3mm to 6mm shall be filled around 100 diameter MS pipe in the bore well. The shaft shall be filled with 500 mm thick layers each from the bottom of shaft with boulders of size 50mm to 150mm, gravel of size 5mm to 10mm, coarse sand having particle size 1.5mm to 2.0mm and boulders of size not less than 200mm respectively.

(f) Drawing based on above details of recharge structure for rainwater harvesting has to be prepared by contractor and to be approved from engineer in charge.

23.0 STATUTORY RULES

23.1. Contractor shall comply with all the applicable statutory rules pertaining to factories act (as applicable far the State), Fire Safety Rules of Tariff Advisory Committee. Water Act for pollution control, Energy Conservation Act, etc.

23.2. Provisions for fire proof doors, no. of staircases, fire separation wall, plastering on structural members (in fire prone areas) etc. shall be made according to the recommendations of Tariff Advisory Committee.

23.3. Statutory clearance and norms of State Pollution Control Board shall be followed as per Water Act for effluent quality from plant.

23.4. Foundation system adopted by Bidder shall ensure that relative settlement and other criteria shall be as per provision in IS: 1904 and other Indian Standards.

23.5. All water retaining structures designed as uncracked section shall also be tested for water tightness at full water level in accordance with clause no. 10 of IS :3370 (Part-I).

23.6. Construction joints shall be as per IS: 456.

23.7. All underground concrete structures like basements, pumps houses, water retaining structures etc. shall have plasticizer cum water proofing cement plaster additive conforming to 1S:9103. In addition, limit on permeability as given in 1S:2645 shall also be met with. The concrete surface of these structures in contact with earth shall also be provided with two coat of bituminous painting for water/damp proofing. In case of water leakage in the above structures, Injection Method shall be applied for repairing the leakage.

23.8. All building/construction materials shall conform to the best quality specified in CPWD specifications if not otherwise mentioned in this specification.

23.9. All tests as required in the standard field quality plans of CPWD or as per sound engineering practices have to be carried out.

23.10. The type and treatment of all foundation shall be as per recommendation of geo-technical investigation reports.

24.0 TESTS FOR MATERIAL / WORKMANSHIP

All tests required for various bought out items, materials, quality of workmanship or any other tests as desired by Project Manager and as specified in technical specification shall be carried out by the Bidder at his own cost in the presence of the authorized representative of the Engineer.

The quality assurance check lists are given at the end of respective chapters / sections of these specifications. The Bidder shall submit comprehensive Quality Assurance plan for all materials, equipment, workmanship, services etc. and get it approved from the Engineer. This shall include setting up a test laboratory at site. However, such check list shall in no way limit the liability and responsibility of the Bidder in regard to quality of workmanship as detailed out in the specifications.

The sampling & testing of the construction materials shall be in accordance to latest CPWD Specifications related to all activities of the building and other civil construction works.

25.0 DRAWINGS

The successful Bidder shall first submit the structural design calculations along with general arrangement drawings for approval. After the approval of the design calculations by the owner detailed construction drawings shall be prepared and submitted for Employer's approval along with revised design calculations if required within 15 days. Required number of sets of design calculations, drawings and documents shall be submitted by the Bidder.

BOQ, Calculations and other documents etc. shall be on A4 size paper. All the drawings shall be drawn to the scale as far as possible on A1 size or larger size paper and should be legible. The submission shall be

- Three (03) Sets of approved and released for construction drawings/BOQ/Calculation for Owners reference.
- Six (06) Sets of final As Built drawings, design, BOQ, Calculation & O&M manual for all equipments supplied.
- Soft copies of all drawings/Documents/calculation in Auto CAD and Microsoft office file format as applicable.

Drawings shall be treated as submitted, only if provided with BOQ (If applicable). Transmittal sheet shall be mandatory to attach with all the drawing and documents. Format for transmittal shall be provided to successful bidder for drawing approvals etc.

26.0 ALTERATION IN SPECIFICATION AND DESIGN

The Project Manager shall have the power to make any alteration and omissions from, additions to or substitution for the original specifications, drawings, designs and instructions that may appear to him to be necessary during the progress of the work and the Bidder shall carry out the work in accordance with any instruction which may be given to him in writing signed by the Project Manager and such alterations, omissions, additions or substitutions shall not invalidate the contract and any altered, added or substituted work which the Bidder may be directed to do in the manner above specified as part of the work shall be carried out by the Bidder on the same conditions in all respects on which the Bidder agreed to do the original contract work. The time for completion of work shall be altered in the proportion that the altered, added or substituted work bears to the original contract work and the certificate of the Project Manager shall be conclusive as to such proportion.

The rates for the altered items of work shall be worked out on the following basis and necessary alternations in the total amount shall be made on that basis:

(a) The rates to be reimbursed or recovered shall be taken as same as those given in CPWD-DSR (2021) for those items for which the rates are available in CPWD - DSR (2021).

(b) Rates for the items not covered under CPWD - DSR (2021) shall be derived from the rates of similar items of CPWD schedule of rates.

(c) In the event there is no similar class of work specified in the CPWD - DSR (2021), the Bidder shall work on a rate for such an item on the basis of the prevalent market rates for materials / men / machines and submit the same together with the detailed analysis to the Project Manager within 7 days. The Project Manager shall thereafter review the correctness and then conduct necessary negotiations with the Bidder to arrive at a mutually agreeable rate. Engineer's decision in regard to

rates of such items shall be final and binding on the Bidder.

In case of conflict between this chapter and other Chapters of Technical Specifications, provisions given in this chapter shall govern.

\

Table 1- Finishing Schedule

No	Location	Flooring	Wall Internal	Ceiling	Doors, Windows, Ventilators
1	Control room	52 mm thick CC flooring with concrete hardener topping & Dust proof Epoxy Paint & False Flooring.as per specification clause No-6.5.2	Plastic emulsion Paint on smooth surface applied with putty	Oil bound washable distemper on smooth surface applied with putty to RCC Ceiling & P/F of False ceiling approved by EIC as per specification clause no. 6.9	Doors: 02 hours fire rated doors as per clause no. 6.10.b Windows & Ventilators: Aluminium Windows & Ventilators As per clause no. 6.10.c
2	Office rooms, maintenance room, Reception Lobby/ Passage, staircase area/ outdoor steps	Granite Flooring	Oil bound washable distemper on smooth surface applied with putty	Oil bound washable distemper on smooth surface applied with putty	Doors: Steel door as per clause no. 6.10.a Windows & Ventilators: Aluminium Windows & Ventilators As per clause no. 6.10.c
3	Toilet	Anti skid Ceramic tiles with white cement.	Ceramic glazed tile toilet, for pantry above working platform up to 750 mm.	Oil bound washable distemper on smooth surface applied with putty	Doors, Windows & Ventilators: Aluminium Doors, Windows & Ventilators As per clause no. 6.10.c
4	Cellar	52 mm thick CC flooring with concrete hardener topping	Oil bound washable distemper on smooth surface applied with putty	Oil bound washable distemper on smooth surface applied with putty	Doors: Steel door as per clause no. 6.10.a Windows & Ventilators: Aluminium Windows & Ventilators As per clause no. 6.10.c
5	Other areas not specified	Double charged Vitrified tile of size 600x600mm of make Kajaria or equivalent	Oil bound washable distemper on smooth surface applied with putty	Oil bound washable distemper on smooth surface applied with putty	Doors: Steel door as per clause no. 6.10.a Windows & Ventilators: Aluminium Windows & Ventilators As per clause no. 6.10.c

6	Switchgear Room/GIS Room	Self leveling Epoxy flooring 2mm thick after application of 2mm thick screed over 52 mm thick CC flooring with concrete hardener topping	Oil bound washable distemper on smooth surface applied with putty	Oil bound washable distemper on smooth surface applied with putty	Doors: 02 hours fire rated doors as per clause no. 6.10.b Windows & Ventilators: Aluminium Windows & Ventilators As per clause no. 6.10.c
8	All external surfaces (S/stn building, boundary wall and other structures) shall have Texture finish of Make UTTPL (Ultratech Texture Paints Pvt. LTD) The texture finish and shade as approved by BRPL.				

BSES

Technical Specification

Of

HT Indoor Switchgear (33 & 11 kV)

Specification no – BSES-TS-66-HTSWG-R0

Rev:		0
Date:		22 Jun 2022
Prepared by	Abhishek Harsh	
	Hemanshi Kaul	
Reviewed by	Srinivas Gopu	
	Abhinav Srivastava	
Approved by	Gaurav Sharma	
	Gopal Nariya	

INDEX

1 SCOPE OF SUPPLY 3
2 CODES & STANDARDS 3
3 SERVICE CONDITION 4
4 PANEL CONSTRUCTION 4
5 CIRCUIT BREAKER 6
6 FUNCTIONAL REQUIREMENTS 7
7 SURGE SUPPRESSOR 10
8 CURRENT TRANSFORMER 10
9 POTENTIAL TRANSFORMER 10
10 FEEDER AND BUS EARTHING 10
11 EQUIPMENT EARTHING 11
12 METERS 11
13 INDICATION, ALARMS & ANNUNCIATION 12
14 SELECTOR SWITCHES & PUSH BUTTONS 14
15 INTERNAL WIRING 14
16 TERMINAL BLOCKS 15
17 RELAYS 16
18 SYNCH CHECK PHILOSOPHY 28
19 ETHERNET SWITCHES & FIBRE OPTICS 29
20 SPACE HEATERS 30
21 SOCKETS, SWITCHES ,ILLUMINATION LAMPS & MCBs 30
22 NAMEPLATES AND MARKING 31
23 SURFACE TREATMENT & PAINTING 32
24 APPROVED MAKES OF COMPONENTS 32
25 INSPECTION , TESTING & QUALITY ASSURANCE 33
26 PACKING 34
27 SHIPPING 35
28 HANDLING AND STORAGE 35
29 DEVIATION 35
30 ACCESSORIES & TOOLS 36
31 DRAWINGS & DATA SUBMISSION MATRIX 36
ANNEXURE – A - SCOPE OF SUPPLY 39
ANNEXURE – B – TRANSFORMER MONITORING CUM AVR RELAY 40
ANNEXURE – C - TECHNICAL PARTICULARS 43
ANNEXURE – D - GUARANTEED TECHNICAL PARTICULARS (DATA BY BIDDER) 47
ANNEXURE – E – SPARES REQUIREMENT 48
ANNEXURE – F – SLDs 48

1 SCOPE OF SUPPLY

a. This specification covers the design, manufacture, testing, supply, erection & commissioning of 33kV and 11kV, Air Insulated, metal-enclosed and factory assembled switchgear.

b. This specification shall be used in conjunction with all specifications, switchgear data sheets, single line diagrams, and other drawings attached to the specification / purchase requisition.

2 CODES & STANDARDS

Materials, equipment and methods used in the manufacture of switchboards shall conform to the latest edition of following

2.1	Indian Electricity Rules 1956	Latest edition
2.2	Indian Electricity act 1910	Latest edition
2.3	Switchgear and control gear	IEC : 60694, IEC: 60298, IEC : 62271-200, IEC : 60529, IS: 3427, IS: 12729, IS: 12063, IS: 13947, IS: 9046
2.4	Circuit breaker	IEC 62271 - 100, IS 13118, IS 2516
2.5	Isolators & earthing switches	IEC 62271 - 102
2.6	Current transformers	IS:2705, IEC:60185
2.7	Voltage transformer	IS:3156, IEC:60186,
2.8	Indicating Instruments	IS:1248
2.9	Energy meters	IS 13010
2.10	Relays	IS:8686, IS:3231, IS:3842
2.11	Control switches and push buttons	IS 6875
2.12	HV fuses	IS 9385
2.13	Arrangement of Switchgear bus bars, main connections and auxiliary wiring	IS:375
2.14	Code of practice for phosphating iron & steel	IS 6005
2.15	Colours for ready mixed paints	IS 5
2.16	Code of practice for installation and maintenance of switchgear	IS 3072

3 SERVICE CONDITION

3.1	Max Ambient Temperature	50 deg C
3.2	Max Daily average ambient temp	40 deg C
3.3	Min Ambient Temp	0 deg C
3.4	Maximum Humidity	95%
3.5	Minimum Humidity	10%
3.6	Maximum annual rainfall	750 mm
3.7	Average no of rainy days per annum	60
3.8	Rainy months	June to Oct
3.9	Altitude above MSL	300 M
3.10	Seismic Zone	IV

4 PANEL CONSTRUCTION

4.1	Enclosure Type	Free standing, Indoor, Fully compartmentalised, Metal clad, Vermin proof
4.2	Enclosure degree of protection	IP 4X for high voltage compartment IP 5X for low voltage compartment
4.3	Enclosure material	Pre-Galvanized CRCA steel
4.3.1	Load bearing members	2.5 mm thick
4.3.2	Doors and covers	2.0 mm thick
4.3.3	Gland plate	3.0 mm MS for multicore and 5. 0 mm Aluminium for single core cables. All gland plates should be detachable type with gasket
4.4	Dimension of Panel	Maximum 2700mm, Operating height maximum 1600mm. In case of Extension of Existing make panels, vendor shall match the dimension of existing panel.
4.5	Extensibility	On either side
4.6	Separate Compartments for	Bus bar, Circuit Breaker, HV incoming cable, HV outgoing cable, PT, LV instruments & relays
4.7	Transparent inspection window	For cable compartment at height of cable termination.
4.8	Bus end cable box	For direct cable feeder from bus
4.9	Rear Doors	Rear doors shall not be interlocked i.e. all door opening shall be independent to each other.

DocUUID : 23f7dc1d-9724-406f-b48e-bdff68bb2c4f

4.10	Breaker compartment door	Separate, with lockable handle (Design with breaker trolley as the front cover is not acceptable). Door of one panel should not cause hindrance for opening of adjacent panel.
4.11	Inter compartmental connections	
4.11.1	Breaker to bus bar compartment	Through seal-off bushings
4.11.2	Breaker to cable compartment	Through seal-off bushings
4.12	Nut Bolt	Shall be as less as possible for ease of opening of compartments
4.13	Pressure relief devices	To be provided for each HV compartment
4.14	Bus support insulator	Non-hygroscopic, track-resistant, high strength, Epoxy insulators (Calculation for validating dynamic force withstand capability to be submitted during detailed engineering)
4.15	Fixing arrangement	Doors - Concealed hinged, door greater than 500mm shall have minimum three sets of hinges Covers - SS bolts Gasket - Neoprene
4.16	Required HV cable termination height in the cable compartment	650 mm for 11 KV. 1000mm for 33 KV
4.17	Panel Base Frame	Steel Base frame as per manufacturer's standard.
4.18	Handle	Removable bolted covers with handle for cable chamber and busbar chamber. Panel no./identification to be provided on cable box cover also.

DocUUID : 23f7dc1d-9724-406f-b48e-bdff68bb2c4f

4.19	APFC	a. Controlling of Capacitor Banks' switching shall be done by APFC. Although APFC shall not be in bidder's scope, Space for cut out shall be provided in the Capacitor panel. Space requirement-150X150 mm^2 b. Wiring of Bus PT , Incomer CT and Capacitor CT upto spare terminal for APFC shall also be provided in Capacitor Panel
4.20	Technical particulars	As per Annexure –C

5 CIRCUIT BREAKER

5.1	Type	Truck or cassette type
5.2	Mounting	On withdrawable truck or carriage, with locking facility in service position.
5.3	Switching duty	c. Transformer (oil filled and dry type) d. Motor (of small and large ratings – DOL starting with starting current 6 to 8 times the full load current & with a maximum of 3 starts per hour) e. Underground cable with length up to 10 km
5.4	Interrupting medium	Vacuum
5.5	Contact	Tulip contact shall be provided without any gap between contacts
5.6	Breaker operation	Three separate identical single pole units operated through the common shaft
5.7	Operating Mechanism	Re-strike free, Trip free, with electrical anti-pumping feature
5.7.1	Type	Motor wound, spring charged, stored energy type with manual charging facility
5.7.2	Operation on supply failure	One O-C-O operation possible after failure of power supply to the spring charging motor
5.8	Breaker indications & push buttons	

DocUUID : 23f7dc1d-9724-406f-b48e-bdff68bb2c4f

5.8.1	ON/ OFF / Emergency trip push button	a. Manual / mechanical. b. Emergency Off push button should be provided with a protective flap. c. Mechanical ON shall have padlocking facility.
5.8.2	Mechanical ON – OFF indication	On breaker trolley front
5.8.3	Operation counter	On breaker trolley front
5.8.4	Test-service position indicator	On breaker trolley front
5.8.5	Mechanism charge / discharge indicator	On breaker trolley front
5.9	Breaker positions	Service, Test and Isolated
5.10	Inter changeability	Possible, only with breaker of same rating
5.11	Breaker Control	On panel front only
5.12	Handle	Breaker shall be provided with handles for easy handling, rack in–out operation and manual spring charging as applicable.
5.13	Pin Sequence and Configuration of Pin of Adaptor Plug	(a) Pin sequence and No of Pins of Adaptor plug shall be same in Outgoing and Capacitor Panel (b) Pin sequence and No of Pins of Adaptor plug shall be same in Incoming and Bus Coupler Panel
5.14	Technical particulars	As per Annexure-C

6 FUNCTIONAL REQUIREMENTS

6.1	Interlocks	
6.1.1	Breaker compartment door opening	Opening of door and rack out to test/isolated position should be possible with breaker in OFF position only.
6.1.2	Breaker compartment door closing	Should be possible even when breaker is in isolated position
6.1.3	Racking mechanism safety interlock	Mechanical type
6.1.4	Racking in or out of breaker inhibited	When the breaker is closed

6.1.5	Racking in the circuit breaker inhibited	Unless the control plug is fully engaged
6.1.6	Disconnection of the control plug inhibited	As long as the breaker is in service position
6.1.7	Opening of cable compartment cover of Incomer Panels inhibited	As long as cable end is alive
6.2	Safety Devices	
6.2.1	Exposure to live parts	In case the breaker panel door is required to be opened during a contingency, the personnel should not be exposed to any live part. Suitable shrouds/barriers/insulating sleeves should be provided.
6.2.2	Breaker handing	In case the breaker is mounted on a carriage which does not naturally roll out on the floor, a trolley for handling the breaker is to be provided.
6.3	Operation of breaker	In either service or test position
6.3.1	Closing from local	Only when local/remote selector switch is in local position
6.3.2	Closing from remote	Only when local/remote selector switch is in remote position
6.3.3	Tripping from local	Only when local/remote selector switch is in local position
6.3.4	Tripping from remote	Only when local/remote selector switch is in remote position
6.3.5	Tripping from protective relays	Irrespective of position of local/remote switch
6.3.6	Testing of breaker	In test or isolated position keeping control plug connected
6.4	Safety shutters.	

6.4.1	Automatic safety shutter for female primary disconnects	To fully cover contacts when breaker is withdrawn to test. Independent operating mechanism for bus bar & cable side shutters, separately pad-lockable in closed position.
6.4.2	Label for identification	For Bus side and cable side shutters
6.4.3	Warning label on shutters of incoming and other connections	Clearly visible label "Isolate elsewhere before earthing" be provided
6.5	Breaker electrical operation features	
6.5.1	Trip circuit supervision	To be given for breaker close & open condition
6.5.2	Trip circuit supervision relay contact	For indication, alarm & to inhibit closing of breaker
6.5.3	Emergency trip push button contact	Wired directly to trip coil (wired to Master trip relay if second trip coil provided)
6.5.4	Emergency trip push button contact	Wired to inhibit closing of breaker
6.5.5	Master trip relay contact (if given)	Wired to inhibit closing of breaker
6.5.6	Tripping or opening of breaker through relay but not routed through Lockout (Example- SCADA Opening, Undervoltage, Overvoltage)	Wired to Contact multiplication Relay and then from CMR to tripping of breaker
6.5.7	Closing of breaker through relay	Wired to Contact multiplication Relay and then from CMR to closing of breaker
6.6	DC control supply bus in all panels	Fed by two DC incoming sources in Bus coupler panel with auto changeover facility
6.7	PT supply bus in all panels	Fed normally by bus PT with automatic changeover facility to incomer line PT
6.8	Flaps for Internal Arc Protection	Flaps shall not have any pores/ opening during normal operation

DocUUID : 23f7dc1d-9724-406f-b48e-bdff68bb2c4f

7 SURGE SUPPRESSOR

7.1	Provision	To be provided in all panels except bus coupler and BPT.
7.2	Type	Gapless, metal oxide type
7.3	Technical particulars	As per Annexure -C

8 CURRENT TRANSFORMER

8.1	Type	Shall be cast resin type with insulation class of E or better.
8.2	Rating and technical particulars	As per Annexure – C (Technical particulars) and Annexure – F (SLDs)
8.3	CBCT	If specified, bidder shall clearly mention his proposal for mounting the same.

9 POTENTIAL TRANSFORMER

9.1	Type	Shall be cast resin type with insulation class of E or better.
9.2	Rating and technical particulars	As per Annexure – C (Technical particulars) and Annexure – F (SLDs)
9.3	Mounting	It shall be mounted on a withdrawable carriage. Mounting of PT on the breaker truck is not acceptable. Mounting of PT on the panel top is also not acceptable. Primary PT fuse shall be easily accessible.
9.4	Neutral	The HV neutral connection to earth shall be easily accessible for disconnection during HV test.

10 FEEDER AND BUS EARTHING

10.1	Earthing arrangement	Through separate earthing truck for bus & feeder
10.2	Short time withstand capacity of earthing truck	Equal to rating of breaker. Refer technical parameters.
10.3	Operation from front	Mechanically operated by separate switch.

DocUUID : 23f7dc1d-9724-406f-b48e-bdff68bb2c4f

10.4	Interlocks and Alarm	To prevent inadvertent closing on live circuit, with padlocking arrangement to lock truck in close or open position.

11 EQUIPMENT EARTHING

11.1	Material of earthing bus	Aluminium
11.2	Earthing Bus Position	It shall run through whole switchgear passing nearer to Power Cable Position
11.3	Earth bus joints	All bolted joints in the bus should be made by connection of two bolts.
11.4	Rating	Sized for rated short circuit current for 3 seconds
11.5	Enclosure & non -current carrying part of the switchboard / components	Effectively bonded to the earth bus.
11.6	Hinged doors	Earthed through flexible copper braid
11.7	Circuit breaker frame /carriage	Earthed before the main circuit breaker contacts/ control circuit contacts are plugged in the associated stationary contacts
11.8	Metallic cases of relays, instruments and other LT panel mounted equipment	Connected to the earth bus by independent copper wires of size not less than 2.5 sq. mm with green colour insulation. For this purpose LT compartment should have a clear designated earth bus to which earth connections from all components are to be connected.
11.9	CT and PT neutral	Earthed at one place at the terminal blocks through links.

12 METERS

12.1	Mounting	Flush mounted
12.2	Multifunction Meter	
12.2.1	SCADA Interfacing	RS485 rear port suitable for integration on Modbus Protocol
12.2.2	Size	96x96 mm^2

DocUUID : 23f7dc1d-9724-406f-b48e-bdff68bb2c4f

12.2.3	Panels where to be provided	All panels except Bus PT Panel
12.2.4	Accuracy Class	0.2
12.2.5	Signal List	R-Ph Current, Y-Ph Current, B-Ph Current, Neutral Current, R-Y Ph Voltage, Y-B Ph Voltage, B-R Ph Voltage, Active Power, Active Energy, Reactive Power, Power Factor, Max Demand, Phase angle 1, Phase angle 2, Phase angle 3, THD Mean Current, THD Mean Voltage
12.2.6	Data Type	MFI
12.2.7	Compatibility with RTU	ABB 560
12.2.8	Programmability	CT secondary shall be programmable i.e for both 1 A and 5 A
12.2.9	Auxiliary Supply	a. 48 – 240VDC and AC i.e universal type. b. Although in Scheme, MFM must be wired up with DC only
12.3	Voltmeter	Digital type with programmable ratio
12.3.1	Size	96x96 mm^2
12.3.2	Panels where to be provided	Incomer and bus PT panel
12.3.3	Voltmeter switch	Inbuilt in meter
12.3.4	Accuracy Class	1.0
12.4	Energy meter provision	Energy meter is not in supplier's scope. Only space and CT/PT wiring is to be provided in all panels except bus coupler and bus PT. Space for Energy meter shall be 200(w) X 350(h) mm^2

13 INDICATION, ALARMS & ANNUNCIATION

13.1	Indications	Flush mounted, High intensity, clustered LED type
13.1.1	Breaker ON	Red
13.1.2	Breaker Off	Green
13.1.3	Spring Charged	Blue
13.1.4	DC control supply fail	Amber
13.1.5	AC control supply fail	Amber
13.1.6	Auto trip	Amber
13.1.7	Test Position	White
13.1.8	Service Position	White

DocUUID : 23f7dc1d-9724-406f-b48e-bdff68bb2c4f

13.1.9	Heater circuit healthy	Yellow (Indication with integrated push button for checking)
13.1.10	Trip circuit healthy	White
13.1.11	PT supply as applicable	R,Y B
13.2	Annunciator (For 33kV Panels only)	
13.2.1	Type	Static type alongwith alarm. Annunciations shall be repetitive type and shall be capable of registering the fleeting signal. Fascia test facility should also be provided.
13.2.2	Note	LED type indications may not be provided for alarm signals provided on annunciator.
13.2.3	Mounting	Flush mounted
13.2.4	Fascia	12 window
13.2.5	Signals to provided on Fascia	Window 1 – Main Protection Operated (Distance /Differential) Window 2 – Backup O/C & E/F Protection Operated Window 3 – LBB operated Window 4 – CB Autotrip Window 5 – Trip Circuit Unhealthy Window 6 – DC Fail Window 7 – AC Fail Window 8 – VT Fuse Fail Window 9 – Protection Relay Faulty
13.2.6	Push Buttons	For test, accept and reset
13.2.7	Potential Free Contacts	To be provided for event logger
13.3	Alarm scheme with isolation switch	a. For DC fail, TC fail and CB auto trip in 11kV panels b. For all signals wired to annunciator in 33kV panels

DocUUID : 23f7dc1d-9724-406f-b48e-bdff68bb2c4f

Sequence of operation of the annunciator shall be as follows-

S No.	Alarm Condition	Fault Contact	Visual Annunciation	Audible Annunciation
a.	Normal	Open	Off	Off
b.	Abnormal	Close	Flashing	On
c.	Accept	Close	Steady on	Off
d.	Return to normal	Open	Steady On	Off
e.	Reset	Open	Off	Off
f.	Reset before return to normal	Close	Flashing	On

14 SELECTOR SWITCHES & PUSH BUTTONS

14.1	Selector switches	Flush mounted on LV compartment door, with shrouded terminals
14.1.1	TNC switch with pistol grip	Lockable, spring return to normal position
14.1.2	Local / SCADA selector switch	2 pole Lockable Switch
14.1.3	Rotary ON/OFF switches	For heater / illumination circuit
14.1.4	Rating	16 A
14.2	Push Button	Flush mounted on LV compartment door, with shrouded terminals
14.2.1	Emergency trip push button	Red color with stay put
14.2.2	Accept push buttons	Black color – Trip alarm / DC fail alarm
14.2.3	Reset push buttons	Yellow color – Trip alarm / DC fail alarm
14.2.4	Rating	10 A

15 INTERNAL WIRING

15.1	Internal wiring	1100 V grade, PVC insulated (FRLS) stranded flexible copper wire.
15.2	Size	2.5 sq mm for CT circuit, 1.5 sq mm for PT & control circuits
15.3	Colour code	
15.3.1	CT & PT	R Ph – Red Y Ph – Yellow B Ph – Blue Neutral – Black

15.3.2	Others	DC– grey, AC-black, Earth – green
15.4	Ferrules	At both ends of wire
15.5	Ferrule type	Interlocked type (one additional red colour ferrule for all wires in trip circuit)
15.6	Lugs	Tinned copper, pre-insulated, ring type, fork type and pin type as applicable. CT circuits should use ring type lugs only.
15.7	Spare contacts	Spare contacts of relays and contactors etc. should be wired upto the terminal block.
15.8	Wiring enclosure	Plastic channels, Inter panel wiring through PVC sleeves
15.9	Interpanel wiring	Wires with ferrule to be terminated in the adjacent shipping section should be supplied with one end terminated and the other end bunched and coiled.
15.10	Auxiliary supply	Auxiliary bus wiring for AC and DC supplies, voltage transformer circuits, annunciation circuits and other common services shall be provided on the same set of terminals in all the panels with proper segregation.

16 TERMINAL BLOCKS

16.1	Rating and Type	1100 V grade, moulded piece, stud type screw driver operated terminals complete with insulated barriers, washers, nuts and lock nuts.
16.2	Segregation	TBs shall be segregated.
16.3	Suitability	Terminal Block shall be Stud Type Screw Driver Operated suitable for 6sqmm control cable. Disconnecting facility shall be provided in CT and PT terminal. Shorting and Earthing facility shall be provided in CT
16.4	Marking and covers	White fibre markings strip with clear plastic, slip-on / clip-on terminal covers to be provided.
16.5	Disconnecting Facility	To be provided in CT and PT terminals

DocUUID : 23f7dc1d-9724-406f-b48e-bdff68bb2c4f

16.6	Shorting & Earthing Facility	To be provided in CT Terminals
16.7	Spare Terminals	20% in each TB row
16.8	Spare Terminal Block in Capacitor Bank Panel	Separate Terminal Block with 50 number terminals required (20 Numbers Disconnecting and 30 Number Non Disconnecting type)
16.9	TB shrouds & separators	Moulded non- inflammable plastic material
16.10	Clearance between 2 sets of TB	100 mm min
16.11	Clearance with cable gland plate	250 mm min
16.12	Clearance between AC / DC set of TB	100 mm min
16.13	Test terminal blocks	Screw driver operated stud type for metering circuit

17 RELAYS

17.1	Protection Relays – General Features	
17.1.1	Technology and Functionality	Numerical , microprocessor based with provision for multifunction protection, control, metering and monitoring
17.1.2	Mounting	Flush Mounting, IP5X
17.1.3	Architecture	Hardware and software architecture shall be modular and disconnectable to adapt the protection and control unit to the required level of complexity as per the application.
17.1.4	Programming and configuration	Relay shall utilize a user friendly setting and operating multi-lingual software in windows environment with menus and icons for fast access to the data required. Programming software and communication cord for offered relays should be included in scope of supply.
17.1.5	Conformal Coating	a. Required on all cards and Components to protect against moisture, dust, chemicals, temperature extremes etc b. Testing shall be as per IEC 60068-2-60

DocUUID : 23f7dc1d-9724-406f-b48e-bdff68bb2c4f

17.1.6	SCADA Interface port	LC type Dual fibre optic port for interfacing with SCADA on IEC 61850 & PRP compatible. Through this port relays shall be connected to Ethernet switches..
17.1.7	Processing Indications	SCADA functions for monitoring shall be executed on SPI (Single Point Input) and DPI (Double Point Input). DPI shall only be used in case of Isolator and Circuit breaker “close” and “open” indication.
17.1.8	Command Processing	Functionality of command processing offered for SCADA interface shall include the processing of single and double commands i.e SCO (Single Command Output) and DCO (Double object command Output). DCO shall only be used in case of Isolator and Circuit Breaker “close” and “open” command.
17.1.9	PC Interface port	Front port (preferably serial) for configuration/data downloads using PC. Cost of licensed software and communication cord, required for programming of offered protection relays shall be included in the cost of switchgear.
17.1.10	User Interface	An alphanumeric key pad and graphical LCD display with backlight indicating measurement values and operating messages. It should be possible to access and change all settings and parameters without the use of PC.
17.1.11	SCADA Interface	Relay shall communicate all measured & monitored parameters, analog signals, event record, fault record, DIs , DOs etc to SCADA
17.1.12	Relay Characteristics	Relay shall integrate all necessary protections for different applications in accordance with IS and IEC. Relay shall provide wide setting ranges and choice of all IEC, IEEE and other tripping curves through a

DocUUID : 23f7dc1d-9724-406f-b48e-bdff68bb2c4f

		minimum of two setting groups.
17.1.13	GOOSE Messaging	Relays shall communicate all status signals, commands and events on GOOSE messaging.
17.1.14	Event and Fault records	Relay shall have the facility of recording of various parameters during event/fault with option to set the duration of record through settable pre fault and post fault time. Relay shall store records for last 10 events and 10 faults (minimum). It should be possible to download records locally to PC and remotely to SCADA.
17.1.15	Self diagnosis	Relay shall be able to detect internal failures. A watchdog relay with changeover contact shall provide information about the failure.
17.1.16	Time synchronization	All relays shall be capable of being synchronized with the system clock using SCADA interface and PC.
17.1.17	Operation Indicators	LEDs with push button for resetting.
17.1.18	Test Facility	Inbuilt with necessary test plugs.
17.2	Protection Relays for 11kV Incomer panel	
17.2.1	Relay 1	3-phase Directional Overcurrent and Earthfault protection with IDMT, Definite time and instantaneous characteristics
		Undervoltage and overvoltage protection
		Trip Circuit Supervision
		Sync Check function
		PT supervision (fuse failure monitoring)
		Relay shall communicate all measured and monitored parameters like current, voltage, active power, reactive power, apparent power, power factor, phase angle, event record, fault record, DIs ,

DocUUID : 23f7dc1d-9724-406f-b48e-bdff68bb2c4f

		DOs etc to SCADA
17.2.2	Relay 2	Auto Re-closer (If Specified in Tender document)
		High Impedance Restricted Earth fault protection.
17.2.3	User Configurable DIs and Dos	Relay-1 & 2 should have a total of 16 Dis and 10 Dos (minimum). Each relay should have atleast 2 Dis and 4 Dos
17.2.4	Note	Combining functions of Relay-1 and Relay-2 in single relay is not acceptable.
17.2.5	SLD	Refer annexure – F1
17.3	Protection Relays for 11kV Bus Section panel	
17.3.1	Relay 1	3-phase Overcurrent and Earthfault protection with IDMT, Definite time and instantaneous characteristics
		Sync Check function
		Trip Circuit Supervision
		PT supervision (fuse failure monitoring)
		User Configurable 16 Dis and 8 Dos (minimum)
		Relay shall communicate all measured and monitored parameters like current, voltage, active power, reactive power, apparent power, power factor, phase angle, event record, fault record, DIs , DOs etc to SCADA
		Auto Re-closer (If Specified in Tender document)
17.3.2	SLD	Refer annexure – F2
17.4	Protection Relays for 11kV Outgoing panel	
17.4.1	Relay 1	3-phase Overcurrent and Earthfault protection with IDMT, Definite time and instantaneous characteristics
		Trip Circuit Supervision
		User Configurable 12 Dis and 6 Dos (minimum)
		Relay shall communicate all measured and monitored parameters like current, voltage, active

DocUUID : 23f7dc1d-9724-406f-b48e-bdff68bb2c4f

		power, reactive power, apparent power, power factor, phase angle, event record, fault record, DIs , DOs etc to SCADA
		Auto Re-closer (If Specified in Tender document)
17.4.2	SLD	Refer annexure – F3
17.5	Protection Relays for 11kV Station Transformer panel	
17.5.1	Relay 1	3-phase Overcurrent and Earthfault protection with IDMT, Definite time and instantaneous characteristics
		Trip Circuit Supervision
		User Configurable 12 DIs and 6 DOs (minimum)
		Relay shall communicate all measured and monitored parameters like current, voltage, active power, reactive power, apparent power, power factor, phase angle, event record, fault record, DIs , DOs etc to SCADA
		Auto Re-closer (If Specified in Tender document)
17.5.2	SLD	Refer annexure – F4
17.6	Protection Relays for 11kV Capacitor panel	
17.6.1	Relay 1	3-phase Overcurrent and Earthfault protection with IDMT, Definite time and instantaneous characteristics
		Undervoltage and Overvoltage protection(From Bus PT)
		Trip Circuit Supervision
		Neutral Unbalance protection(From RVT associated to Cap Bank)
		Timer for on time delay (minimum 600 seconds)
		User Configurable 12 DIs and 6 DOs (minimum)
		Relay shall communicate all measured and monitored parameters like current, voltage, active power, reactive power, apparent power, power

		factor, phase angle, event record, fault record, DIs , DOs etc to SCADA
		Auto Re-closer (If Specified in Tender document)
17.6.2	SLD	Refer annexure – F5.
17.7	Protection Relays for 33kV Incomer	
17.7.1	Relay 1	Line differential protection (Dual channel, ST Port Compatible for Single Mode Fibre having wavelength 1310 nm)
		Distance Protection
		Software based CT ratio correction
		Dedicated port for communication with remote end relay through optical fibre. This port should be in addition to PC interface and SCADA interface ports.
17.7.2	Relay 2	Bay control unit having MIMIC with 3-phase Directional Overcurrent and Earthfault protection with IDMT, Definite time and instantaneous characteristics.
		Trip Circuit Supervision
		Sync check function
		Under Frequency, Over Frequency, Rate of Change of Frequency
		Circuit Breaker failure protection
		Reverse blocking function
		PT supervision
		Relay shall communicate all measured and monitored parameters like current, voltage, active power, reactive power, apparent power, power factor, phase angle, event record, fault record, DIs , DOs etc to SCADA
		Auto Re-closer (If Specified in Tender document)
17.7.3	User Configurable DIs and Dos	Relay-1 & 2 should have a total of 16 DIs and 12 DOs (minimum). Each relay should have atleast 2 DIs and 6 Dos

DocUUID : 23f7dc1d-9724-406f-b48e-bdff68bb2c4f

17.7.4	Note	Combining functions of Relay-1 and Relay-2 in single relay is not acceptable.
17.7.5	SLD	Refer annexure – F6
17.8	Protection Relays for 33kV Transformer Feeder Panel	
17.8.1	Relay 1	Biased differential protection
		REF protection
		Software based ratio and vector correction feature (without ICT)
		H2 and H5 harmonic restraint
17.8.2	Relay 2	Bay control unit having MIMIC with 3-phase Overcurrent and Earthfault protection with IDMT, Definite time and instantaneous characteristics
		Trip Circuit Supervision
		Under Frequency, Over Frequency, Rate of Change of Frequency
		Reverse Blocking function
		Circuit Breaker failure protection
		Relay shall communicate all measured and monitored parameters like current, voltage, active power, reactive power, apparent power, power factor, phase angle, event record, fault record, DIs , DOs etc to SCADA
		Auto Re-closer (If Specified in Tender document)
17.8.3	User Configurable DIs and DOs	Relay-1 & 2 should have a total of 16 DIs and 12 DOs (minimum). Each relay should have atleast 2 DIs and 6 DOs.
17.8.4	Note	Combining functions of Relay-1 and Relay-2 in single relay is not acceptable.
17.8.5	SLD	Refer annexure – F7
17.9	Protection Relays for 33kV Buscoupler Panel	
17.9.1	Relay 1	Bay control unit having MIMIC with 3-phase Overcurrent and earthfault protection with IDMT,

DocUUID : 23f7dc1d-9724-406f-b48e-bdff68bb2c4f

		Definite time and instantaneous characteristics.
		Trip Circuit Supervision
		Sync check function
		Reverse Blocking Function
		Circuit Breaker failure protection
		PT supervision (fuse failure monitoring) for Bus PT-1
		User Configurable 16 DIs and 8 DOs (minimum)
		Relay shall communicate all measured and monitored parameters like current, voltage, active power, reactive power, apparent power, power factor, phase angle, event record, fault record, DIs , DOs etc to SCADA
17.9.2	Relay 2	Under Frequency, Over Frequency, Rate of Change of Frequency
		PT supervision (fuse failure monitoring) for Bus PT-2
		Auto Re-closer (If Specified in Tender document)
17.9.3	SLD	Refer annexure – F8
17.10	Protection Relays for 33kV Outgoing Panel (For Installation at KCC Consumer Premises)	
17.10.1	Relay 1	Bay control unit having MIMIC with 3-phase Overcurrent and Earthfault protection with IDMT, Definite time and instantaneous characteristics
		Trip Circuit Supervision
		Reverse Blocking Function
		Under Frequency, Over Frequency, Rate of Change of Frequency
		Circuit Breaker failure protection
		User Configurable 12 DIs and 6 DOs (minimum)
		Relay shall communicate all measured and monitored parameters like current, voltage, active power, reactive power, apparent power, power

DocUUID : 23f7dc1d-9724-406f-b48e-bdff68bb2c4f

		factor, phase angle, event record, fault record, DIs , DOs etc to SCADA
		Auto Re-closer (If Specified in Tender document)
17.10.2	SLD	Refer annexure – F9
17.11	Protection Relays for 33kV Incomer from 66/33kV Autotransformer	
17.11.1	Relay 1	High Impedance Restricted Earth fault protection
17.11.2	Relay 2	Bay control unit having MIMIC with 3-phase Overcurrent and Earthfault protection with IDMT, Definite time and instantaneous characteristics
		Trip Circuit Supervision
		Under Frequency, Over Frequency, Rate of Change of Frequency
		Reverse Blocking Function
		Sync check function
		Undervoltage and overvoltage protection
		Circuit Breaker failure protection
		PT supervision (fuse failure monitoring)
		Relay shall communicate all measured and monitored parameters like current, voltage, active power, reactive power, apparent power, power factor, phase angle, event record, fault record, DIs , DOs etc to SCADA
		Auto Re-closer (If Specified in Tender document)
17.11.3	User Configurable DIs and DOs	Relay-1 & 2 should have a total of 16 DIs and 12 DOs (minimum). Each relay should have atleast 2 DIs and 6 Dos
17.11.4	Note	Combining functions of Relay-1 and Relay-2 in single relay is not acceptable
17.11.5	SLD	Refer annexure – F10
17.12	Protection Relays for 33kV Outgoing from 66/33kV Autotransformer	
17.12.1		Power swing blocking
	Relay 1	Line differential protection(Dual channel, ST Port

DocUUID : 23f7dc1d-9724-406f-b48e-bdff68bb2c4f

		Compatible for Single Mode Fibre having wavelength 1310 nm)
		Distance Protection
		Software based CT ratio correction
		Dedicated port for communication with remote end relay through optical fibre. This port should be in addition to PC interface and SCADA interface ports.
17.12.2	Relay 2	Bay control unit having MIMIC with 3-phase Overcurrent and Earthfault protection with IDMT, Definite time and instantaneous characteristics.
		PT Supervision
		Under Frequency, Over Frequency, Rate of Change of Frequency
		Trip Circuit Supervision
		Reverse Blocking Function
		Circuit Breaker failure protection
		Relay shall communicate all measured and monitored parameters like current, voltage, active power, reactive power, apparent power, power factor, phase angle, event record, fault record, DIs , DOs etc to SCADA
		Auto Re-closer (If Specified in Tender document)
17.12.3	User Configurable DIs and Dos	Relay-1 & 2 should have a total of 16 DIs and 12 DOs (minimum). Each relay should have atleast 2 DIs and 6 Dos
17.12.4	Note	Combining functions of Relay-1 and Relay-2 in single relay is not acceptable.
17.12.5	SLD	Refer annexure – F11
17.13	Protection Relays for 33kV Buscoupler for Switchboard of 66/33kV Autotransformer	
17.13.1	Relay 1	Bay control unit having MIMIC with 3-phase Overcurrent and earthfault protection with IDMT, Definite time and instantaneous characteristics.
		Trip Circuit Supervision

DocUUID : 23f7dc1d-9724-406f-b48e-bdff68bb2c4f

		Sync check function
		Circuit Breaker failure protection
		PT supervision (fuse failure monitoring) for Bus PT-1
		User Configurable 16 DIs and 8 DOs (minimum)
		Relay shall communicate all measured and monitored parameters like current, voltage, active power, reactive power, apparent power, power factor, phase angle, event record, fault record, DIs , DOs etc to SCADA
17.13.2	Relay 2	Under Frequency, Over Frequency, Rate of Change of Frequency
		PT supervision (fuse failure monitoring) for Bus PT-2
		Auto Re-closer (If Specified in Tender document)
17.13.3	SLD	Refer annexure – F12
17.14	Protection Relays – SCADA Interfacing	
17.14.1	Configuration and wiring of DIs in Protection Relays (All panels) for routing status signals to SCADA	DI-1 – TC-1 Healthy DI-2 – TC-2 Healthy DI-3 – CB Autotrip (contact from lockout relay) DI-4 – CB Open DI-5 – CB Close DI-6 – CB in service DI-7 – CB in test DI-8 – Spring Charged DI-9 – L/R switch Remote DI-10 – AC fail DI-11 – Adjacent Panel DC Fail/DC MCB Trip DI-12 – Adjacent Panel Protection Relay fail DI-13 – PT MCB trip (metering and protection, for incomer and capacitor panel only) Sequence of DIs should be strictly as mentioned above. Change in sequence of DIs will not be acceptable.
17.14.2	Configuration and wiring of	DO-1 – CB Open

DocUUID : 23f7dc1d-9724-406f-b48e-bdff68bb2c4f

	DOs in Protection relays (all panels) for execution of SCADA commands through SCADA interface port (refer clause 16.1.5).	DO-2 – CB close DO-3-Electrical Reset Sequence of DOs should be strictly as mentioned above. Change in sequence of DOs will not be acceptable.
17.14.3	Looping of numerical relays	All relays in the switchboard have to be looped to form a common bus for interfacing with SCADA.
17.14.4	Spare DIs and DOs	Should be wired upto terminal block for future use.
17.15	Transformer Monitoring cum AVR Relay	
17.15.1	Features	As per annexure –B
17.15.2	Requirement	To be provided in 33KV Transformer panel only
17.16	Auxiliary Relays – General Features	
17.16.1	Relays for auxiliary, supervision, trip and timer relays	Static or electromechanical type.
17.16.2	Reset mechanism for auxiliary relays	Self reset contacts except for lock-out relays.
17.16.3	Reset mechanism for lockout relays	Electrical reset type for 11kV outgoing panels only. Hand reset type for all other panels.
17.16.4	Operation indicators	With hand-reset operation indicators (flags) or LEDs with pushbuttons for resetting.
17.17	Auxiliary relays – Requirement	
17.17.1	Anti pumping (94), lockout (86),	a. For each breaker b. Lock Out Relay mounting shall be flush type on front side of Panel
17.17.2	PT selection relays	To be provided in bus coupler panel for selection between Bus PT and Line PT of respective sections.
17.17.3	Switchgear with two incomer & bus coupler	Lockout relay (86) contact of each incoming breakers to be wired in series in closing circuit of other incoming breakers & bus coupler.
17.17.4	Contact Multiplication Relay for Tripping and closing of Breaker	a. One for Tripping and one for closing with each breaker b. Current Rating shall be 30 percent more than closing and tripping coil current rating c. Shall be of closed type i.e. direct

DocUUID : 23f7dc1d-9724-406f-b48e-bdff68bb2c4f

		unauthorised access shall not be provided.
17.17.5	Auxiliary Relays, contact multiplication relays etc.	To effect interlocks and to exchange signals of status & control
17.17.6	Transformer trouble relays (For 33kV Transformer feeder panel only)	Auxiliary relays with indicating flags (contactors will not be accepted) should be provided for the following trip and alarm commands – a. Buchholz trip b. OSR trip c. PRV trip d. SPR trip e. WTI Trip f. OTI Trip g. Buchholz Alarm h. Low oil level alarm i. OTI Alarm j. WTI Alarm.
17.18	General Requirements for all relays/contactors	Auxiliary supply will be 50/220VDC based on requirement. All relays/contactors shall be suitable for continuous operation at 15% overvoltage.

18 SYNCH CHECK PHILOSOPHY

18.1	Dead Bus – Live Line	a. Application - Required for Charging of Bus from Line Supply b. Logic - Sync check relay installed on line panel will check the line and bus voltage and derive that the line is live and bus is in dead condition i.e bus has to be charged by the line breaker. Hence Sync check relay will allow the line breaker to close in this condition.
18.2	Dead Line – Live Bus	a. Application - Required for Charging of Line from Bus Supply b. Logic - Sync check relay installed on line panel will check line and bus voltage and derive that the line is dead and bus is in live condition i.e line has to charged from bus. Hence Sync check relay will allow the line breaker to close in this condition.

DocUUID : 23f7dc1d-9724-406f-b48e-bdff68bb2c4f

18.3	Live Bus – Live Line	a. Application - Required for paralleling of bus and line supply b. Logic - Sync check relay installed on line panel will compare magnitude and phase sequence of line and bus voltages. If the variations are within the range set in the relay, sync check relay will allow the closing of line breaker.
18.4	Live Bus – Dead Bus	a. Application – Required for charging of dead bus through another live bus. b. Logic – Sync check relay installed on bus coupler/bus section panel will check voltage of both buses and derive that one bus is dead and other bus is live i.e dead bus is being charged from live bus. Hence Sync check relay will allow the bus coupler/bus section breaker to close in this condition.
18.5	Live Bus – Live Bus	a. Application – Required for paralleling of two buses/bus sections. b. Logic – Sync check relay installed on bus coupler/bus section panel will compare the magnitude and phase sequence of voltage of both buses (or bus sections). If the variations are within the range set in the relay, sync check relay will allow the bus coupler/bus section breaker to close.

19 ETHERNET SWITCHES & FIBRE OPTICS

19.1	Ethernet Switch	
19.1.1	Numbers	Two at each site
19.1.2	FO Port	16 Nos
19.1.3	RJ 45 Port	4 Nos
19.1.4	Communication Protocol	IEC 61850
19.1.5	Network Protocol	PRP
19.1.6	Downlink Rate	100 MBPS
19.1.7	Uplink Rate	1 GBPS
19.1.8	Coating	Conformal
19.1.9	Power Supply Voltage	220 / 50 VDC as per site condition
19.1.10	Grade	Industrial
19.1.11	Certification required	KEMA,CE & FCC for IEC 61850 compliance
19.1.12	Operating Temperature	
19.1.13	Mounting	In Switchgear Panel
19.1.14	Blinking LED Indicators	On each RJ45 ports

DocUUID : 23f7dc1d-9724-406f-b48e-bdff68bb2c4f

19.1.15	Separate Maintenance/console Part	Required
19.1.16	Latency	Less than or equal to 10 ms
19.1.17	Fibre Optic Compatibility	Multimode, 1310 nm
19.1.18	Placement	Din Rail Arrangement Inside Switchgear
19.2	Fibre Optics (Patch Cord) and Ethernet cable	
19.2.1	Connection	From Relays, Meters to Ethernet Switch
19.2.2	Mode of Fibre Optics	Multimode
19.2.3	Wavelength	1310 nm
19.2.4	Ethernet Cable Type	CAT VI
19.2.5	Associated Connectors and Accessories	Required

20 SPACE HEATERS

20.1	Type	Thermostat controlled with switch for isolation
20.2	Location	In Breaker & HV cable compartment, mounted on an insulator. Heater position in cable compartment should be easily accessible after cable termination. Heater position in breaker chamber shall be accessible with breaker racked-in.

21 SOCKETS, SWITCHES ,ILLUMINATION LAMPS & MCBs

21.1	Illumination lamp with switch	For LV & cable chamber
21.2	Universal type (5/15 A) Socket with Switch	In LV chamber
21.3	MCBs	a. MCBs of Proper rating may be provided. b. Although Main MCB shall be directly wired up to Trip Circuit, No other MCB shall be provided in between c. Rating of MCB shall be 300% of full load current of relevant circuit

DocUUID : 23f7dc1d-9724-406f-b48e-bdff68bb2c4f

22 NAMEPLATES AND MARKING

22.1	Nameplates	To be provided as per the following description
22.1.1	Equipment Nameplates	a. All equipment mounted on front side as well as equipment mounted inside the panels shall be provided with individual name plates with equipment designation engraved. b. All front mounted equipment shall be also provided at the rear with individual name plates engraved with tag numbers corresponding to the one shown in the panel internal wiring to facilitate easy tracing of the wiring.
22.1.2	Feeder Nameplates	a. Large and bold name plate carrying the feeder identification/ numbers shall be provided on the top of each panel on front as well as rear side. On rear side, nameplate should be provided on frame. b. Rear bottom of each panel shall have a nameplate clearly indicating the following: Customer Name – BSES Delhi; PO No. & date; Drawing Reference No. etc.
22.1.3	Rating Plate	Following details are to be provided on Panel rating plate: a. Customer Name – BSES Yamuna Power Limited b. PO No. & Date – c. Complete CT Rating plate details d. Complete PT Rating plate details e. Complete CB Rating Plate details f. Date of Manufacturing- g. Warranty Period- h. Customer care No- i. Control Voltage-
22.1.4	Material	Non-rusting metal or 3 ply lamicoid. Nameplates shall be black with white engraving lettering. Stickers are

DocUUID : 23f7dc1d-9724-406f-b48e-bdff68bb2c4f

		not allowed.
22.1.5	Fixing	All nameplates/rating plates shall be riveted to the panels at all four corners. Bolting/screwing is not acceptable.
22.2	Markings	Each switch shall bear clear inscription identifying its function. Similar inscription shall also be provided on each device whose function is not otherwise identified. If any switch or device does not bear this inscription separate nameplate giving its function shall be provided for it. Switch shall also have clear inscription for each position indicating e.g. Trip-Neutral close, ON-OFF etc.

23 SURFACE TREATMENT & PAINTING

23.1	Surface Treatment	Sand blasting or by seven tank process.
23.2	Paint type	Powder coated. Pure polyester base grade-A structure finish.
23.3	Paint shade	RAL 7032 for external & internal surface
23.4	Paint thickness	Minimum 50 microns

24 APPROVED MAKES OF COMPONENTS

24.1	Numerical Relays	Siprotec series of Siemens, Micom series of Schneider/Alstom. Numerical relays used in complete switchboard should be of same make. Use of two different makes of relays in a switchboard is not acceptable.
24.2	Transformer monitoring cum AVR relay	A-eberle
24.3	Electromechanical Relays	Alstom/Schneider/Siemens/ABB/ER
24.4	Aux Relays	ABB/Jyoti/Omran
24.5	Contactors	ABB/Siemens/Telemechanique

DocUUID : 23f7dc1d-9724-406f-b48e-bdff68bb2c4f

24.6	Instrument transformers	ECS/ Pragati/ Gemini/Schneider/CGL/Kappa/Narayan power tech
24.7	MCBs	Siemens/Schneider/Legrand/ABB
24.8	Control switches	Switron/Kaycee
24.9	Test terminal blocks	IMP/Schneider/Alstom
24.10	Terminal blocks	Elmex/Connectwell
24.11	Indicating lamps	Siemens/ Teknic/ Binay
24.12	Surge Suppressors	Oblum/Tyco
24.13	Meters	Rishabh(Rish delta Energy)/Conzerv
24.14	Ethernet Switch	Ruggedcom/Hirschman

25 INSPECTION , TESTING & QUALITY ASSURANCE

25.1	Type Tests	The product must be of type tested as per applicable Indian standards / IEC
25.1.1	Type test report validity period	Last five years from date of bid submission. Bidder with type test report more than 5 years old needs to re-conduct the tests without any commercial implication to BSES
25.1.2	Pressure relief device operation	Test certificate for panel to be submitted
25.2	Acceptance & Routine tests	As per the specification and relevant standards. Charges for these tests shall be deemed to be included in the equipment price. In addition to these tests, following tests have to be carried out as acceptance tests -
25.2.1	Primary injection test	To be carried out on panels selected for testing
25.2.2	Temperature rise test	One panel per Purchase order (PO with minimum 10 panels) without any commercial implication to BSES. In-house testing is acceptable.
25.2.3	Paint Thickness/ Peel off	To be carried out on panels selected for testing

DocUUID : 23f7dc1d-9724-406f-b48e-bdff68bb2c4f

25.3	Inspection	The purchaser/owner reserves the right to witness all the acceptance/routine tests during inspection.
25.4	Notice to purchaser for conducting type tests	At least three weeks in advance
25.5	Quality Assurance	
25.5.1	Vendor quality plan	To be submitted for purchaser approval
25.5.2	Inspection points	To be mutually identified & agreed in quality plan

26 PACKING

26.1	Packing Protection	Against corrosion, dampness, heavy rains, breakage and vibration. During transportation/ transit and storage, panels may be subjected to outdoor conditions. Hence, packing of each panel shall be weatherproof.
26.2	Packing for accessories and spares	Robust wooden non returnable packing case with all the above protection & identification
26.3	Details of Packing Identification Label on each packing case	a. Individual serial number b. Purchaser's name c. PO number (along with SAP item code, if any) & date d. Equipment Tag no. (if any) e. Destination f. Project Details g. Manufacturer / Supplier's name h. Address of Manufacturer / Supplier / it's agent i. Description and Quantity j. Country of origin k. Month & year of Manufacturing l. Case measurements m. Gross and net weights in kilograms n. All necessary slinging and stacking instructions

DocUUID : 23f7dc1d-9724-406f-b48e-bdff68bb2c4f

27 SHIPPING

27.1	Shipping	The bidder shall ascertain at an early date and definitely before the commencement of manufacture, any transport limitations such as weights, dimensions, road culverts, Overhead lines, free access etc. from the Manufacturing plant to the project site. Bidder shall furnish the confirmation that the proposed Packages can be safely transported, as normal or oversize packages, up to the site. Any modifications required in the infrastructure and cost thereof in this connection shall be brought to the notice of the Purchaser.
		The seller shall be responsible for all transit damage due to improper packing.

28 HANDLING AND STORAGE

28.1	Handling and Storage	Manufacturer instruction shall be followed. Detail handling & storage instruction sheet / manual needs to be furnished before commencement of supply.

29 DEVIATION

29.1	Deviation	Deviations from this Specification shall be provided in excel sheet with tender by reference to the Specification clause/GTP/Drawing and a description of the alternative offer. In absence of such a statement, it will be assumed that the bidder complies fully with this specification.

DocUUID : 23f7dc1d-9724-406f-b48e-bdff68bb2c4f

30 ACCESSORIES & TOOLS

30.1	Type and Quantity	Bidder to indicate
30.2	Special tools & tackles required for erection, testing, commissioning and maintenance of the switchboard	The cost of these items shall be indicated separately in the bid as optional.
30.3	Suitable handling truck / trolley for lifting and moving the circuit breaker	To be supplied. (Two trolleys for each type/rating of breaker)

31 DRAWINGS & DATA SUBMISSION MATRIX

Drawing submission shall be as per the matrix given below. All documents/ drawing shall be provided on A3/A4 sheet (based on legibility) in box file with separators for each section. PDF shall also be provided of all documents via USB. Deviation sheet and GTP shall be provided in excel sheet .Language of the documents shall be English only. Deficient/ improper document/ drawing submission shall be liable for rejection.

S. No	Head	Bid	Drawing Approval	Pre Dispatch	Pre Closure
31.1	Contact Person Name, Email ID and Mobile Number	Required			
31.2	Consolidated Deviation Sheet	Required	Required		
31.3	GTP	Required	Required		
31.4	Relevant Type Test as per IS/IEC	Required			
31.5	Power Cable and control cable Philosophy and Schedule		Required		
31.6	Manufacturer's quality assurance plan and certification for quality standards		Required		
31.7	Sizing Calculation of Associated Equipment		Required		

DocUUID : 23f7dc1d-9724-406f-b48e-bdff68bb2c4f

31.8	Recommended Spares Apart from spares stated in Spec(for five years of operation)		Required		
31.9	11 kV / 33 kV Switchgear drawing				
31.9.1	General Arrangement	Required	Required		
31.9.2	Sectional Layout		Required		
31.9.3	Door Layout		Required		
31.9.4	LV Box Internal Layout		Required		
31.9.5	SLD	Required	Required		
31.9.6	Schematic Circuit diagram and Scheme of Each type of Panel		Required		
31.9.7	Communication Architecture		Required		
31.9.8	Bus Bar Arrangement		Required		
31.9.9	QAP		Required		
31.9.10	Panel wise BOQ		Required		
31.9.11	Logic Operation Diagram		Required		
31.9.12	Plan		Required		
31.9.13	Synch Logic Diagram		Required		
31.9.14	Foundation Diagram		Required		
31.9.15	DI sheet		Required		
31.9.16	DO Sheet		Required		
31.9.17	TB Details		Required		
31.9.18	Make of all Component as per specification		Required		
31.10	Drawing of CT, PT and Surge Arrestor		Required		
31.11	Drawing of Substation Room		Required		
31.12	Ventilation detail requirement of GIS Room		Required		

DocUUID : 23f7dc1d-9724-406f-b48e-bdff68bb2c4f

31.13	Installation, erection and commissioning manual for switchgear		Required		
31.14	Inspection Reports			Required	
31.15	As manufacturing Drawings			Required	
31.16	Operation and Maintenance Manual			Required	Required
31.17	Trouble shooting manual			Required	Required
31.18	As built Drawings				Required
31.19	Test Report				Required
31.20	Weekly progress report				Required

DocUUID : 23f7dc1d-9724-406f-b48e-bdff68bb2c4f

ANNEXURE – A - SCOPE OF SUPPLY

Scope of supply should include the following –

1.1 Design, manufacture, assembly, testing at manufacturer's works, properly packed for transport, supply and FOR delivery at site of following 11kV / 33kV Switchgears as per enclosed specification and single line diagram.

1.2 Base channel frame of the switchgears with hardware.

1.3 Two trolleys for breaker of each size are to be provided per switchboard.

1.4 Programming software and communication cord for numerical relays.

1.5 Unit price of 33kV Incomer with Distance relay as primary protection and 33kV Incomer with Line differential relay as primary protection should be mentioned separately in the bid. Primary protection to be used in Incomer panel will be finalized based on site requirement.

1.6 Unit price of Bus PT should be indicated separately in the bid to enable addition/deletion based on site requirement.

1.7 Bidder should indicate price of one set of special tools and tackles (if any) required for maintenance of switchgear and its components.

1.8 Bidder should indicate price of each spare as per Annexure E.

1.9 All relevant drawings, data and instruction manuals.

DocUUID : 23f7dc1d-9724-406f-b48e-bdff68bb2c4f

ANNEXURE – B – TRANSFORMER MONITORING CUM AVR RELAY

1	General features	
1.1	Technology and Functionality	Microprocessor based with provision for multifunction control and monitoring.
1.2	Mounting	Flush Mounting
1.3	Architecture	Hardware and software architecture shall be modular and disconnectable to adapt the control unit to the required level of complexity as per the application.
1.4	Programming and configuration	AVR shall utilize a user friendly setting and operating multilingual software in windows environment with menus and icons for fast access to the data required.
1.5	User Machine Interface	UMI with an alphanumeric key pad and graphical LCD display with backlight indicating measurement values and operating messages. Capability to access and change all settings and parameters.
1.6	PC Interface port	Front port (preferably serial) for configuration using PC. Cost of licensed software and communication cord, required for programming of offered protection relays using PC, shall be mentioned separately in the bid.
1.7	SCADA Interface port	LC Type Dual fibre optic port for interfacing with SCADA on IEC 61850 & PRP compatible. Through these ports relays shall be connected to Ethernet switches.
1.8	Self diagnosis	Shall be able to detect internal failures. A watchdog relay with changeover contact shall provide information about the failure.
1.9	Cable Termination	Termination of cable shall be at rear side.
1.10	Auxiliary supply	220VDC or 48VDC
2	Inputs and Outputs	
2.1	CT Input	1/5A selectable through programming
2.2	PT Input	110VAC
2.3	Binary Inputs	Sixteen programmable binary inputs should be provided

DocUUID : 23f7dc1d-9724-406f-b48e-bdff68bb2c4f

2.4	Analog Inputs (4-20mA)	One input to be provided
2.5	PT-100 direct input	Two inputs to be provided
2.6	Direct Resistance Input	For tap position indication (18 steps)
2.7	Binary Outputs	Ten programmable binary outputs should be provided
3	Control	
3.1	Control Tasks	Ability to implement control functions through programmable logics
3.2	Voltage setting	Programmable Voltage set point
3.3	Voltage Regulation	Raise/Lower tap position to maintain the preset value of voltage.
3.4	Voltage Regulation modes	Automatic and Manual
3.5	Operation Modes	Local and Remote
3.6	Fan and Pump control	To be provided
3.7	Transformer Paralleling	Capability to parallel transformers whose AVRs are interconnected via a communication network.
4	SCADA Interfacing	
4.1	Configuration of DIs for routing alarm/trip signals to SCADA.	DI-1 – Buchholz trip DI-2 – OSR Trip DI-3 – PRV trip DI-4 – SPR trip DI-5 – OTI trip DI-6 – WTI trip DI-7 – Buchholz alarm DI-8 – Oil Level low alarm (MOG alarm) DI-9 – WTI alarm DI-10 – OTI alarm DI-11 – Tap changer trouble/stuck/out of step DI-12 – Tap changer motor supply fail DI-13 – Tap changer in local control All signals from DI-1 to DI-10 are to be wired up from transformer trouble auxiliary relays.
4.2	Configuration of DOs for	DO-1 – Tap raise

DocUUID : 23f7dc1d-9724-406f-b48e-bdff68bb2c4f

	executing commands from SCADA through interface port/CRP	DO-2 – Tap lower DO-3 – Fan group 1 control DO-4 – Fan group 2 control
4.3	Spare DIs and DOs	To be wired upto the terminal block.
5	Measurement, Event Recording and Monitoring	
5.1	Measured Quantities (optional)	Voltage, Current, Active Power, Reactive Power, Apparent Power, Power factor, frequency
5.2	Event Recording	Facility for recording parameters during various events such as tap change, change in binary input status etc.
5.3	Monitoring	Capability to monitor important transformer parameters such as Oil temperature, Winding Temperature etc and give indication/alarm when the value of a particular parameter exceeds the preset value.

DocUUID : 23f7dc1d-9724-406f-b48e-bdff68bb2c4f

ANNEXURE – C - TECHNICAL PARTICULARS

1.0	SWITCHGEAR		
1.1	Type	Metal clad, air insulated with VCB type circuit breaker	
1.2	Service	Indoor	
1.3	Mounting	Free standing, floor mounted	
1.4	System Voltage	11 KV	33kV
1.5	Voltage variation	+/- 10%	
1.6	Frequency	50 Hz +/- 5%	
1.7	Phase	3	
1.8	Rated voltage	12 KV	36 kV
1.9	Rated current	As per SLDs given in Annexure-F	
1.10	Short time rating for 3 sec.	25kA	25kA
1.11	Internal arc classification and rating		
1.11.1	Classification	IAC – A - FLR	IAC – A - FLR
1.11.2	Rating	25kA for 1 second	25kA for 1 second.
1.12	Insulation level (PF rms / Impulse peak)	28 kV / 75 kV	70 kV/ 170 kV
1.13	System ground	Effectively earthed	Effectively earthed
1.14	Enclosure degree of protection	IP – 4X for high voltage compartment and IP – 5X for metering and protection compartment	
1.15	Bus bar - Main	Rating as per SLDs given in annexure - F, Short time rating as per clause 1.10.	
1.15.1	Material	Tinned Electrolytic copper	
1.15.2	Bus bar sleeve	Sleeved with shrouds on joints. Tape on joints is not acceptable.	
1.15.3	Bus identification	Colour coded	
1.15.4	Temperature rise	40 deg. C for conventional joints. 55 deg. C for silver plated joints	
1.16	Auxiliary bus bar	Electrolytic grade tinned copper	

DocUUID : 23f7dc1d-9724-406f-b48e-bdff68bb2c4f

1.17	Auxiliary DC Supply	220 V DC / 48 V DC	
1.18	Auxiliary AC supply	240 V AC 50 Hz	
1.19	Hardware	Stainless steel.	
1.20	Earth bus	Aluminium	
1.21	Bus duct entry	From top (where ever applicable)	
1.22	Power cable entry	From bottom and rear	
1.23	Control cable entry	From bottom and front (i.e breaker compartment)	
2.0	CIRCUIT BREAKER		
2.1	Voltage class, insulation level, short time rating	As specified for switchgear	
2.2	Rated current	As per SLDs given in annexure - F. Use of two breakers in parallel to meet the required current rating shall not be acceptable.	
2.3	Duty cycle	O – 0.3 sec – CO - 3min - CO	
2.4	Short circuit rating		
2.4.1	A.C sym. breaking current	25kA	25kA
2.4.2	Short circuit making current	62.5kA	62.5kA
2.5	Operation time		
2.5.1	Break time	Not more than 4 cycles	
2.5.2	Make time	Not more than 5 cycles	
2.6	Range of Auxiliary Voltage		
2.6.1	Closing	85% - 110%	
2.6.2	Tripping	70% - 110%	
2.6.3	Spring Charging	85% - 110%	
2.7	No. of spare aux. Contacts of Breaker, for Owner's use.	Minimum 6 NO + 6 NC	
2.8	No. of spare contacts of Service and Test position limit switch	2 NO	

DocUUID : 23f7dc1d-9724-406f-b48e-bdff68bb2c4f

3.0	CURRENT TRANSFORMERS		
3.1	Voltage class, insulation level and short time rating	As specified for switchgear	
3.2	Type	Cast resin, window / bar primary type	
3.3	Class of insulation	Class E or better	
3.4	Ratio	As per SLDs given in annexure - F	
3.5	Number of secondaries	As per SLDs given in annexure - F	
3.6	Accuracy class		
3.6.1	Protection core	5P20	
3.6.2	Protection (Diff. / REF)	PS	
3.6.3	Metering	0.2s	
3.6.4	Core balance CT	PS	
3.7	Burden (VA)	Adequate for the protection & instruments offered	
3.8	Excitation current of PS Class CTs	30 mA at Vk/4	
3.8	Knee Point Voltage of PS Class CTs (Vk)	>= 40 (Rct + 4)	
3.9	Primary operating current sensitivity of CBCTs	5A	
4.0	VOLTAGE TRANSFORMERS		
4.1	Type	Cast resin, draw out type, single phase units	
4.2	Rated Voltage		
4.2.1	Primary	11000/sq.rt.3	33000/sq.rt.3
4.2.2	Secondary	110V/sq.rt.3	
4.3	No. of phases	3	
4.4	No. of secondary windings	2	
4.5	Method of connection	Star/Star	
4.6	Rated voltage factor	1.2 continuous, 1.9 for 30 seconds	
4.7	Class of insulation	Class E or better	

DocUUID : 23f7dc1d-9724-406f-b48e-bdff68bb2c4f

4.8	Accuracy class		
4.8.1	Protection	3P	
4.8.2	Metering	0.2	
4.9	Primary and secondary fuses	HRC current limiting type, Primary fuse replacement shall be possible with VT in withdrawn position	
5.0	HV FUSES		
5.1	Voltage class	12kV	36kV
5.2	Rupturing capacity	50kA	
5.3	Rated current	As per application	
6.0	SURGE ARRESTORS	For 11kV switchgear	For 33kV switchgear
6.1	Rated Voltage	9kV	30kV
6.2	Maximum continuous operating voltage (MCOV)	7.65kV	25kV
6.3	Discharge current	10kA	10kA
6.4	Discharge class	3	3

Note - The auxiliary DC voltage shall be checked on a case to case basis by Purchaser

DocUUID : 23f7dc1d-9724-406f-b48e-bdff68bb2c4f

Switchgear Condition Monitoring

Thermal Monitoring

A thermal monitoring system shall be provided to detect abnormal temperatures due to faulty connections and to prevent equipment damage. The switchgear shall have temperature measurement sensors at critical points like medium voltage cable connection.

The temperature sensors installed on conductors shall:

- be installed with direct contact to hot point, to achieve accuracy of +/- 2°C
- be self-powered (no auxiliary supply, no battery)
- communicate wirelessly
- Operate from -25°C to 125 °C

The system shall allow 2 configurable thresholds (pre-alarm and alarm).
This system shall have integrated algorithms enabling to anticipate as early as possible and provide pre warning of an imminent failure/damage.

Circuit-breaker monitoring
The system shall monitor the condition of circuit-breaker to detect some abnormal behaviour, if any, and to provide ageing evaluation (% of wear).

System shall monitor:
- Opening time, Charging time
- Faults
- Ageing of mechanism (number of operation)
- Ageing of main contacts

A cloud based Condition Monitoring System, allowing predictive maintenance, shall be provided to achieve health assessment of electrical assets in substation:
- Reduction of unexpected downtime
- Reduction of fire risk
- Improvement of safety for operator and equipment
- Reduction of operational expenses (OPEX)

The system shall generate the analytics and detect abnormal conditions, well in advance before the fault occurs, to give time to Facility Manager to analyse and plan a maintenance to fix the abnormality.

The system shall be on line, 24/7/365, to immediately provide an alarm (with identification/location of the anomaly) to the operator on duty, anywhere.
A system where data is collected manually by operator on site is not acceptable.

Local investigation & monitoring inside the electrical room – Can be made optional
The switchgear shall embed a graphic HMI to help operator during local investigation and local monitoring. This HMI shall give access to the electrical monitoring data and alarms, while operator is inside the MV electrical room.

Remote control & monitoring

- Integration into Power Management software for remote control and monitoring. This monitoring will cover only the routine electrical parameters like voltage, current, breaker status and online temperature measurement but not the condition monitoring of circuit breakers.

Subscription Services:

Minimum Three years subscription to be included for the cloud based predictive IoT service. During this period, leveraging asset data on manufacturer's cloud-based platform with advanced analytics enabling condition-based maintenance; and manufacturer's expertise to provide predictive insights and reports should be ensured. This service should provide guidance and proactive support to ensure critical equipment is maintained at its optimum and enhance safety and security of site. The notification of critical events & recommendation should be transmitted by mail or phone, Smart App to ensure fastest access.

QR code:

Only by scanning this QR code, which is pasted on switchgear, the authorized person can get the access of OEM's safe repository where the below documents are uploaded, related to the switchgear supplied from works.

- Single Line Diagram
- Routine Test Certificates
- General Arrangement Drawings
- Catalogue
- Operation and Maintenance manual

This will help to access all the above required documents any time without having hard copies available.

ANNEXURE – D - GUARANTEED TECHNICAL PARTICULARS (DATA BY BIDDER)

Vendor must submit clause wise compliance in Excel sheet against specification at the time of drawing approval clearly highlighting the deviations from specification against each clause.

DocUUID : 23f7dc1d-9724-406f-b48e-bdff68bb2c4f

ANNEXURE – E – SPARES REQUIREMENT

Unit rate of all below mentioned spares have to be provided in the bid.

S No.	Description	Qty
1	Line voltage transformer	3 (1 set)
2	Bus voltage transformer	3 (1 set)
3	Current transformer of each ratio	3 (1 set)
4	Trip Coil	4
5	Closing Coil	4
6	CB Spring charging motor	2
7	Auxiliary switch	2 sets (2 Nos. each type)
8	Bursting disc / pressure relief plate complete	2
9	Numerical relay of each type	1 nos. (each type)
10	Ethernet Switch	1 No (Each Site)
11	Optical Fibre	20% of Supplied Items
12	CAT VI Ethernet cable for Communication	20% of Supplied Items
13	Vacuum Interrupter Bottle	1 set (3 nos.) of each rating
14	Breaker contacts for busbar	1 set (3 nos.) of each rating
15	Breaker testing cable with plug suitable for breaker on one side and plug suitable for the panel on the other side	3 meter(each type)
16	SCADA Spare	20% of Supplied Items

ANNEXURE – F – SLDs

DocUUID : 23f7dc1d-9724-406f-b48e-bdff68bb2c4f

ANNEXURE–F1

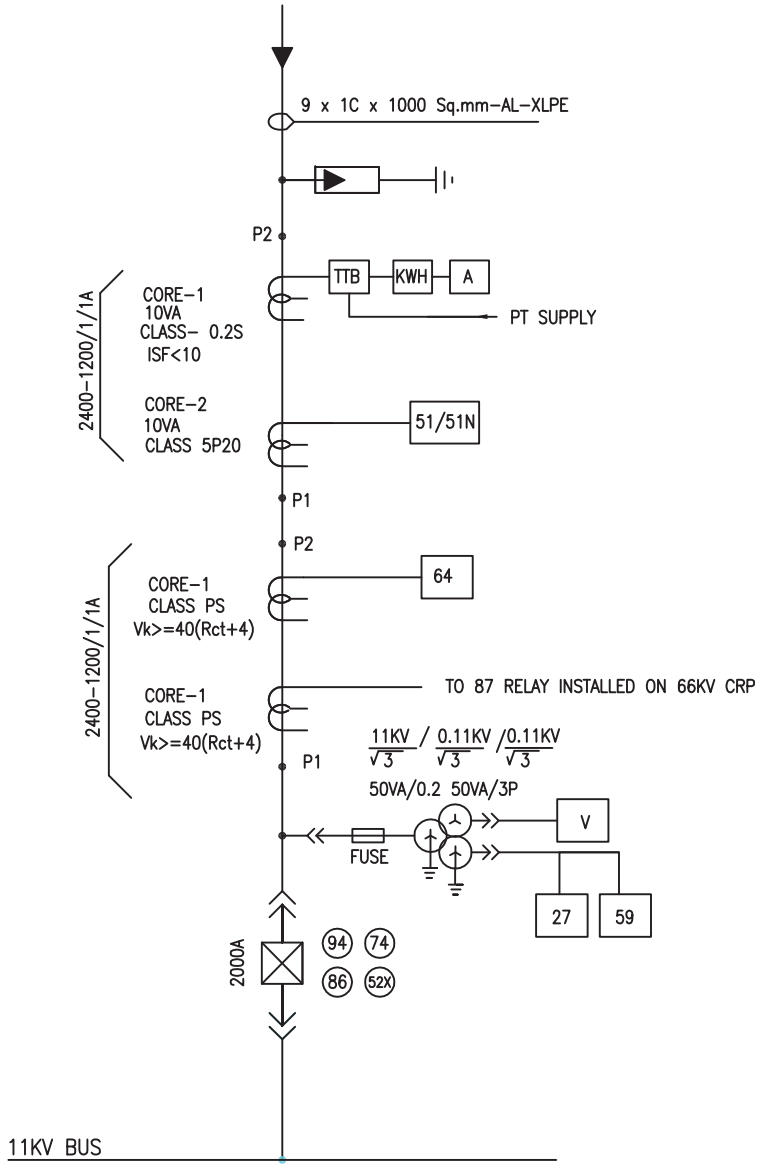

25 KA for 3 secs, 2000A at 50 degree celsius

LEGEND

SYMBOL	DESCRIPTION
	11KV SF6/VACUUM CKT. BKR. DRAWOUT TYPE
	CURRENT TRANSFORMER
	POTENTIAL TRANSFORMER
	SURGE ARRESTOR
	FUSE
52X	BREAKER AUX CONTACT MULTIPLIER
74	TRIP CIRCUIT SUPERVISION RELAY
94	ANTI PUMPING RELAY
86	HIGH SPEED TRIP RELAY
V	VOLTMETER
A	AMMETER

SYMBOL	DESCRIPTION
KWH	ENERGY METER
46	NEGATIVE PHASE SEQUENCE PROTECTION
25	SYNC CHECK
51/51N	O/C & E/F RELAY
27	UNDER VOLTAGE RELAY
87	DIFFERENTIAL RELAY
21	DISTANCE RELAY
59	OVER VOLTAGE RELAY
64	REF RELAY
67/67N	DIRECTIONAL O/C & E/F RELAY
TTB	TEST TERMINAL BLOCK

NOTE:–

1. KWH METER NOT IN SUPPLIER'S SCOPE
2. REFER CLAUSE 16 OF SPECIFICATION FOR DETAILED FUNCTIONAL REQUIREMENTS OF PROTECTION RELAYS

DRAWN	R.K/A.H H.K	TITLE:– STANDARD SLD FOR 11KV INCOMER	BSES
CHECKED	S.G/A.S		
APPD.	G.S/G.N		
DATE	29.04.22		SPECIFICATION NO. BSES–TS–66–HTSWG–R0
SCALE	NTS		SLD–SWG–11KV–01

Bidder's Name & Signature

DocUUID : 23f7dc1d-9724-406f-b48e-bdf68bb2c4f

ANNEXURE–F2

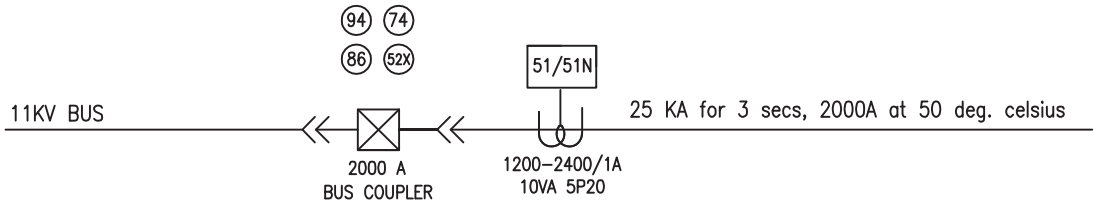

LEGEND

SYMBOL	DESCRIPTION
	11KV SF6/VACUUM CKT. BKR. DRAWOUT TYPE
	CURRENT TRANSFORMER
	POTENTIAL TRANSFORMER
	SURGE ARRESTOR
	FUSE
52X	BREAKER AUX CONTACT MULTIPLIER
74	TRIP CIRCUIT SUPERVISION RELAY
94	ANTI PUMPING RELAY
86	HIGH SPEED TRIP RELAY
V	VOLTMETER
A	AMMETER

SYMBOL	DESCRIPTION
KWH	ENERGY METER
46	NEGATIVE PHASE SEQUENCE PROTECTION
25	SYNC CHECK
51/51N	O/C & E/F RELAY
27	UNDER VOLTAGE RELAY
87	DIFFERENTIAL RELAY
21	DISTANCE RELAY
59	OVER VOLTAGE RELAY
64	REF RELAY
67/67N	DIRECTIONAL O/C & E/F RELAY
TTB	TEST TERMINAL BLOCK

NOTE:–

1. REFER CLAUSE 16 OF SPECIFICATION FOR DETAILED FUNCTIONAL REQUIREMENTS OF PROTECTION RELAYS

DRAWN	R.K/A.H H.K	TITLE:– STANDARD SLD FOR 11KV BUS SECTION	BSES
CHECKED	S.G/A.S		
APPD.	G.S/G.N		
DATE	29.04.22		
SCALE	NTS		

SPECIFICATION NO. BSES–TS–66–HTSWG–R0
SLD–SWG–11KV–02

Bidder's Name & Signature
NIT NO CMC/BR/25-26/FK/PR/KG/1271
Page 182 of 755
DocUUID : 23f7dc1d-9724-406f-b48e-bdff68bb2c4f

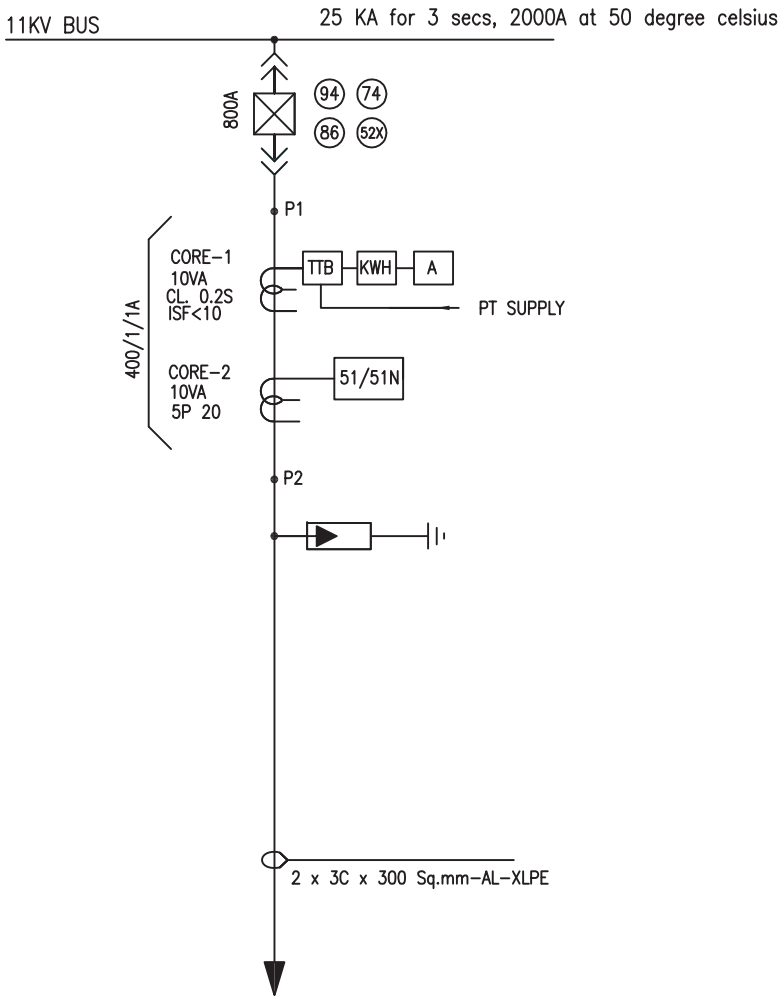

LEGEND

SYMBOL	DESCRIPTION
	11KV SF6/VACUUM CKT. BKR. DRAWOUT TYPE
	CURRENT TRANSFORMER
	POTENTIAL TRANSFORMER
	SURGE ARRESTOR
	FUSE
52X	BREAKER AUX CONTACT MULTIPLIER
74	TRIP CIRCUIT SUPERVISION RELAY
94	ANTI PUMPING RELAY
86	HIGH SPEED TRIP RELAY
V	VOLTMETER
A	AMMETER

SYMBOL	DESCRIPTION
KWH	ENERGY METER
46	NEGATIVE PHASE SEQUENCE PROTECTION
25	SYNC CHECK
51/51N	O/C & E/F RELAY
27	UNDER VOLTAGE RELAY
87	DIFFERENTIAL RELAY
21	DISTANCE RELAY
59	OVER VOLTAGE RELAY
64	REF RELAY
67/67N	DIRECTIONAL O/C & E/F RELAY
TTB	TEST TERMINAL BLOCK

NOTE:–

1. KWH METER NOT IN SUPPLIER'S SCOPE
2. REFER CLAUSE 16 OF SPECIFICATION FOR DETAILED FUNCTIONAL REQUIREMENTS OF PROTECTION RELAYS

DRAWN	R.K/A.H H.K	TITLE:– STANDARD SLD FOR 11KV OUTGOING FEEDER	BSES
CHECKED	S.G/A.S		
APPD.	G.S/G.N		
DATE	29.04.22		
SCALE	NTS		SPECIFICATION NO. BSES–TS–66–HTSWG–R0
		Bidder's Name & Signature	SLD–SWG–11KV–03

DocUUID : 23f7dc1d-9724-406f-b48e-bdf68bb2c4f

ANNEXURE–F4

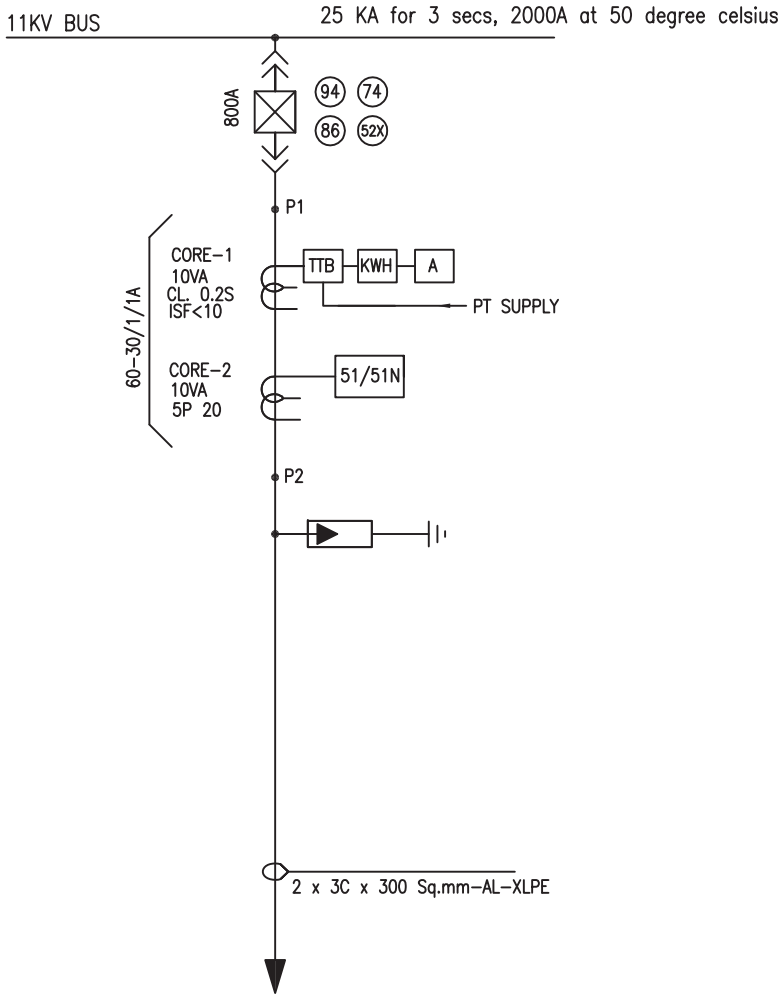

LEGEND

SYMBOL	DESCRIPTION
	11KV SF6/VACUUM CKT. BKR. DRAWOUT TYPE
	CURRENT TRANSFORMER
	POTENTIAL TRANSFORMER
	SURGE ARRESTOR
	FUSE
52X	BREAKER AUX CONTACT MULTIPLIER
74	TRIP CIRCUIT SUPERVISION RELAY
94	ANTI PUMPING RELAY
86	HIGH SPEED TRIP RELAY
V	VOLTMETER
A	AMMETER

SYMBOL	DESCRIPTION
KWH	ENERGY METER
46	NEGATIVE PHASE SEQUENCE PROTECTION
25	SYNC CHECK
51/51N	O/C & E/F RELAY
27	UNDER VOLTAGE RELAY
87	DIFFERENTIAL RELAY
21	DISTANCE RELAY
59	OVER VOLTAGE RELAY
64	REF RELAY
67/67N	DIRECTIONAL O/C & E/F RELAY
TTB	TEST TERMINAL BLOCK

NOTE:–

1. KWH METER NOT IN SUPPLIER'S SCOPE
2. REFER CLAUSE 16 OF SPECIFICATION FOR DETAILED FUNCTIONAL REQUIREMENTS OF PROTECTION RELAYS

DRAWN	R.K/A.H H.K	TITLE:– STANDARD SLD FOR 11KV STATION TRANSFORMER FEEDER	BSES
CHECKED	S.G/A.S		
APPD.	G.S/G.N		
DATE	29.04.22		SPECIFICATION NO. BSES–TS–66–HTSWG–R0
SCALE	NTS		SLD–SWG–11KV–04

Bidder's Name & Signature

DocUUID : 23f7dc1d-9724-406f-b48e-bdf66bb2c4f

ANNEXURE–F5

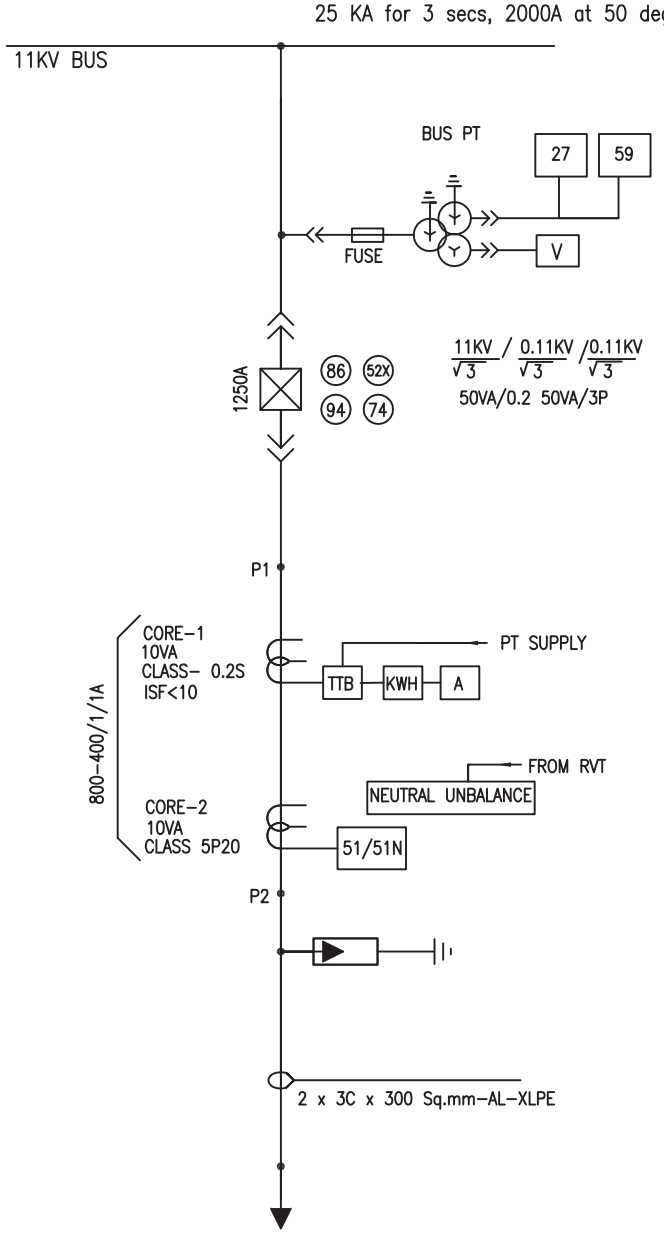

LEGEND

SYMBOL	DESCRIPTION
	11KV SF6/VACUUM CKT. BKR. DRAWOUT TYPE
	CURRENT TRANSFORMER
	POTENTIAL TRANSFORMER
	SURGE ARRESTOR
	FUSE
52X	BREAKER AUX CONTACT MULTIPLIER
74	TRIP CIRCUIT SUPERVISION RELAY
94	ANTI PUMPING RELAY
86	HIGH SPEED TRIP RELAY
V	VOLTMETER
A	AMMETER

SYMBOL	DESCRIPTION
KWH	ENERGY METER
25	SYNC CHECK
51/51N	O/C & E/F RELAY
27	UNDER VOLTAGE RELAY
87	DIFFERENTIAL RELAY
21	DISTANCE RELAY
59	OVER VOLTAGE RELAY
64	REF RELAY
67/67N	DIRECTIONAL O/C & E/F RELAY
TTB	TEST TERMINAL BLOCK

NOTE:–

1. KWH METER NOT IN SUPPLIER'S SCOPE
2. REFER CLAUSE 16 OF SPECIFICATION FOR DETAILED FUNCTIONAL REQUIREMENTS OF PROTECTION RELAYS
3. ONE BPT TO BE CONSIDERED FOR EACH CAPACITOR PANEL

DRAWN	R.K/A.H H.K	TITLE:– STANDARD SLD FOR 11KV CAPACITOR FEEDER	BSES
CHECKED	S.G/A.S		
APPD.	G.S/G.N		
DATE	29.04.22		SPECIFICATION NO: BSES–TS–66–HTSWG–R0
SCALE	NTS		SLD–SWG–11KV–05

Bidder's Name & Signature

DocUUID : 23f7dc1d-9724-406f-b48e-bdf66bb2c4f

ANNEXURE–F6

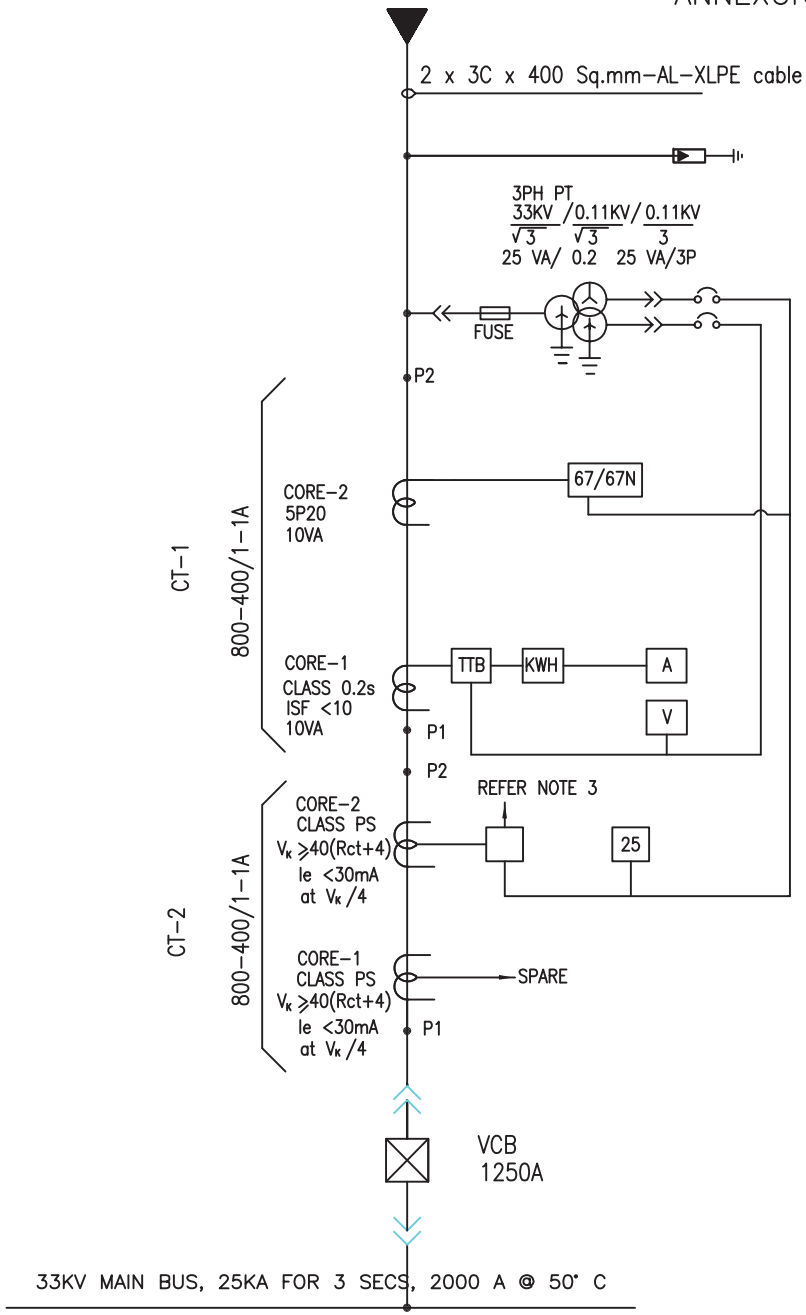

LEGEND

SYMBOL	DESCRIPTION
	11KV SF6/VACUUM CKT. BKR. DRAWOUT TYPE
	CURRENT TRANSFORMER
	POTENTIAL TRANSFORMER
	SURGE ARRESTOR
	FUSE
52X	BREAKER AUX CONTACT MULTIPLIER
74	TRIP CIRCUIT SUPERVISION RELAY
94	ANTI PUMPING RELAY
86	HIGH SPEED TRIP RELAY
V	VOLTMETER
A	AMMETER

SYMBOL	DESCRIPTION
KWH	ENERGY METER
46	NEGATIVE PHASE SEQUENCE PROTECTION
25	SYNC CHECK
51/51N	O/C & E/F RELAY
27	UNDER VOLTAGE RELAY
87	DIFFERENTIAL RELAY
21	DISTANCE RELAY
59	OVER VOLTAGE RELAY
64	REF RELAY
67/67N	DIRECTIONAL O/C & E/F RELAY
TTB	TEST TERMINAL BLOCK

NOTE:
1. KWH METER NOT IN SUPPLIER'S SCOPE
2. REFER CLAUSE 16 OF SPECIFICATION FOR DETAILED FUNCTIONAL REQUIREMENTS OF PROTECTION RELAYS
3. LINE DIFFERENTIAL OR DISTANCE RELAY. REFER CLAUSE 16.7.1 OF SPECIFICATION

DRAWN	R.K/A.H H.K	TITLE TYPICAL SLD FOR 33KV INCOMER	BSES
CHECKED	S.G/A.S		SPEC NO. CMC/BR/25-26/FK/PR/KG/1271-HTSWG-R0
APPD.	G.S/G.N		SLD-SWG-33KV-01
DATE	29.04.22		
SCALE	NTS		

Bidder's Name & Signature

DocUUID : 23f7dc1d-9724-406f-b48e-bdf66bb2c4f

ANNEXURE–F7

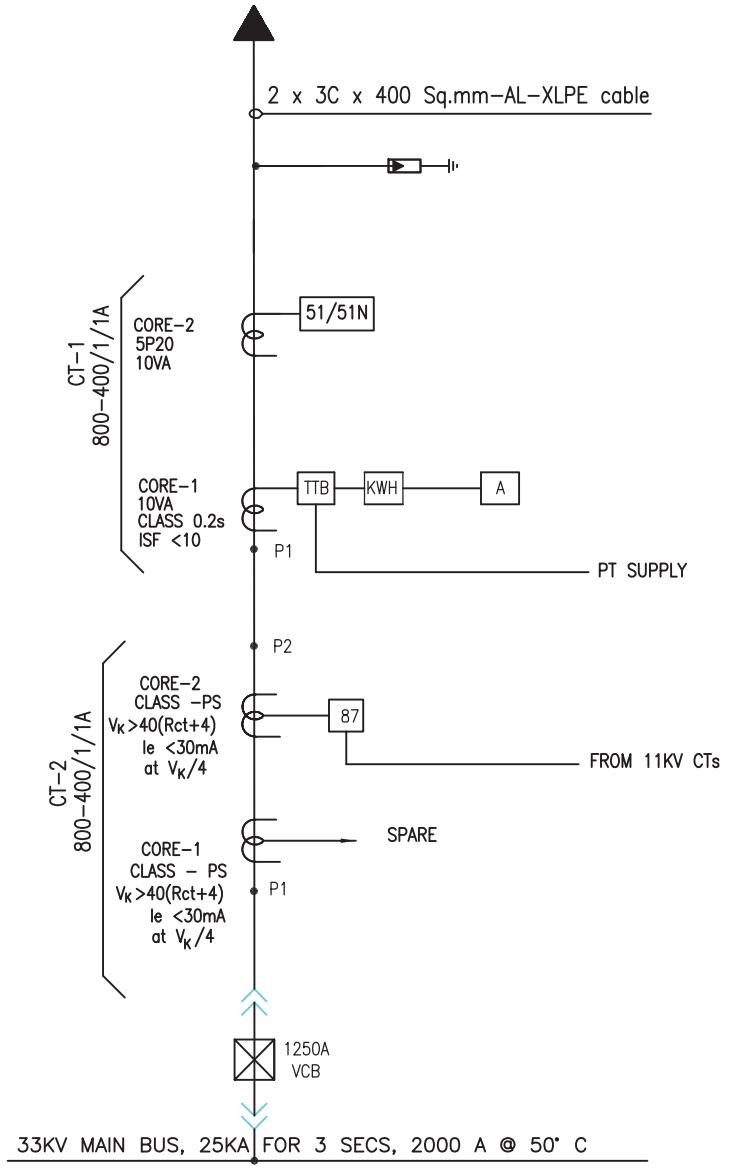

LEGEND

SYMBOL	DESCRIPTION
	11KV SF6/VACUUM CKT. BKR. DRAWOUT TYPE
	CURRENT TRANSFORMER
	POTENTIAL TRANSFORMER
	SURGE ARRESTOR
	FUSE
52X	BREAKER AUX CONTACT MULTIPLIER
74	TRIP CIRCUIT SUPERVISION RELAY
94	ANTI PUMPING RELAY
86	HIGH SPEED TRIP RELAY
V	VOLTMETER
A	AMMETER

SYMBOL	DESCRIPTION
KWH	ENERGY METER
46	NEGATIVE PHASE SEQUENCE PROTECTION
25	SYNC CHECK
51/51N	O/C & E/F RELAY
27	UNDER VOLTAGE RELAY
87	DIFFERENTIAL RELAY
21	DISTANCE RELAY
59	OVER VOLTAGE RELAY
64	REF RELAY
67/67N	DIRECTIONAL O/C & E/F RELAY
TTB	TEST TERMINAL BLOCK

NOTE: 1. KWH METER NOT IN SUPPLIER'S SCOPE

2. REFER CLAUSE 16 OF SPECIFICATION FOR DETAILED FUNCTIONAL REQUIREMENTS OF PROTECTION RELAYS

DRAWN	R.K/A.H H.K
CHECKED	S.G/A.S
APPD.	G.S/G.N
DATE	29.04.22
SCALE	NTS

TITLE
TYPICAL SLD FOR 33/11KV TRANSFORMER FEEDER

BSES

SPECIFICATION NO. BSES-TS-66-HTSWG-R0

SLD-SWG-33KV-02

Bidder's Name & Signature

NIT NO CMC/BR/25-26/FK/PR/KG/1271

DocUUID : 23f7dc1d-9724-406f-b48e-bdff68bb2c4f

ANNEXURE–F8

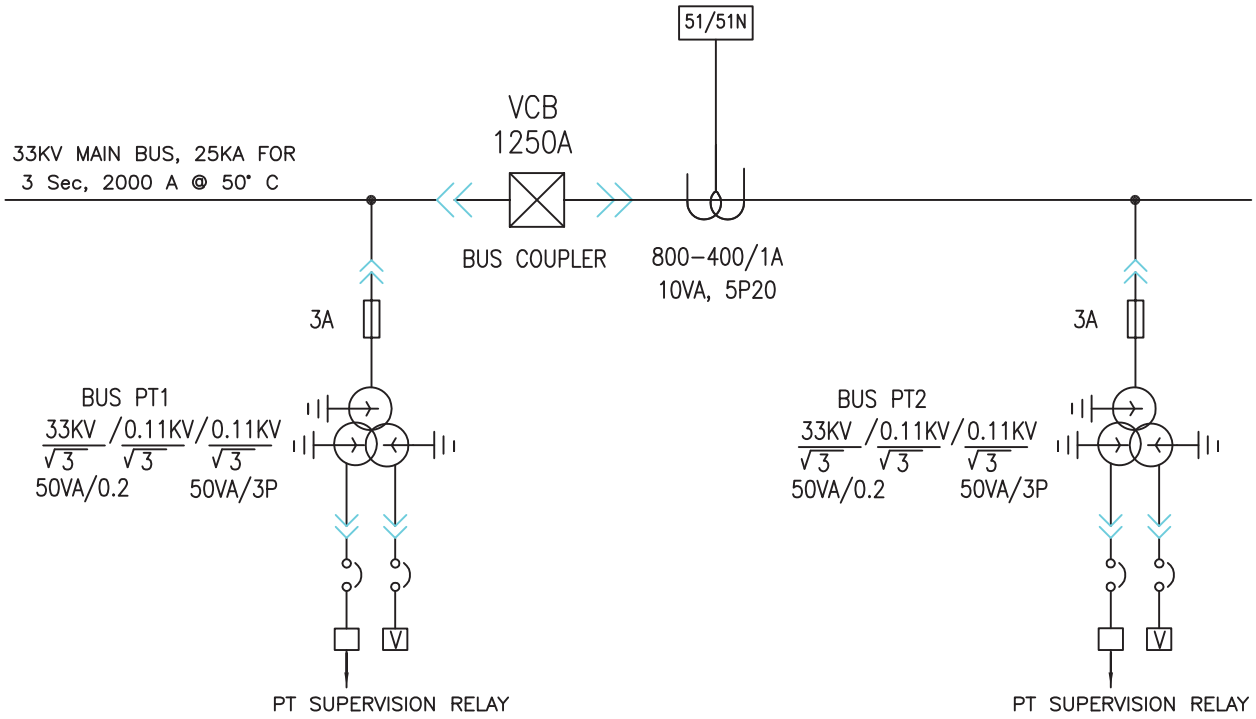

LEGEND

SYMBOL	DESCRIPTION
	11KV SF6/VACUUM CKT. BKR. DRAWOUT TYPE
	CURRENT TRANSFORMER
	POTENTIAL TRANSFORMER
	SURGE ARRESTOR
	FUSE
52X	BREAKER AUX CONTACT MULTIPLIER
74	TRIP CIRCUIT SUPERVISION RELAY
94	ANTI PUMPING RELAY
86	HIGH SPEED TRIP RELAY
V	VOLTMETER
A	AMMETER

SYMBOL	DESCRIPTION
KWH	ENERGY METER
46	NEGATIVE PHASE SEQUENCE PROTECTION
25	SYNC CHECK
51/51N	O/C & E/F RELAY
27	UNDER VOLTAGE RELAY
87	DIFFERENTIAL RELAY
21	DISTANCE RELAY
59	OVER VOLTAGE RELAY
64	REF RELAY
67/67N	DIRECTIONAL O/C & E/F RELAY
TTB	TEST TERMINAL BLOCK

NOTE:–

1. REFER CLAUSE 16 OF SPECIFICATION FOR DETAILED FUNCTIONAL REQUIREMENTS OF PROTECTION RELAYS

DRAWN	R.K/A.H H.K	TITLE	BSES
CHECKED	S.G/A.S	TYPICAL SLD FOR 33KV BUS COUPLER CUM BUS PT	SPECIFICATION NO. BSES-TS-66-HTSWG-R0
APPD.	G.S/G.N		SLD-SWG-33KV-03
DATE	29.04.22		
SCALE	NTS		

Bidder's Name & Signature
Page 188 of 755
NIT NO CMC/BR/25-26/FK/PR/KG/1271
DocUUID : 23f7dc1d-9724-406f-b48e-bdff68bb2c4f

ANNEXURE–F9

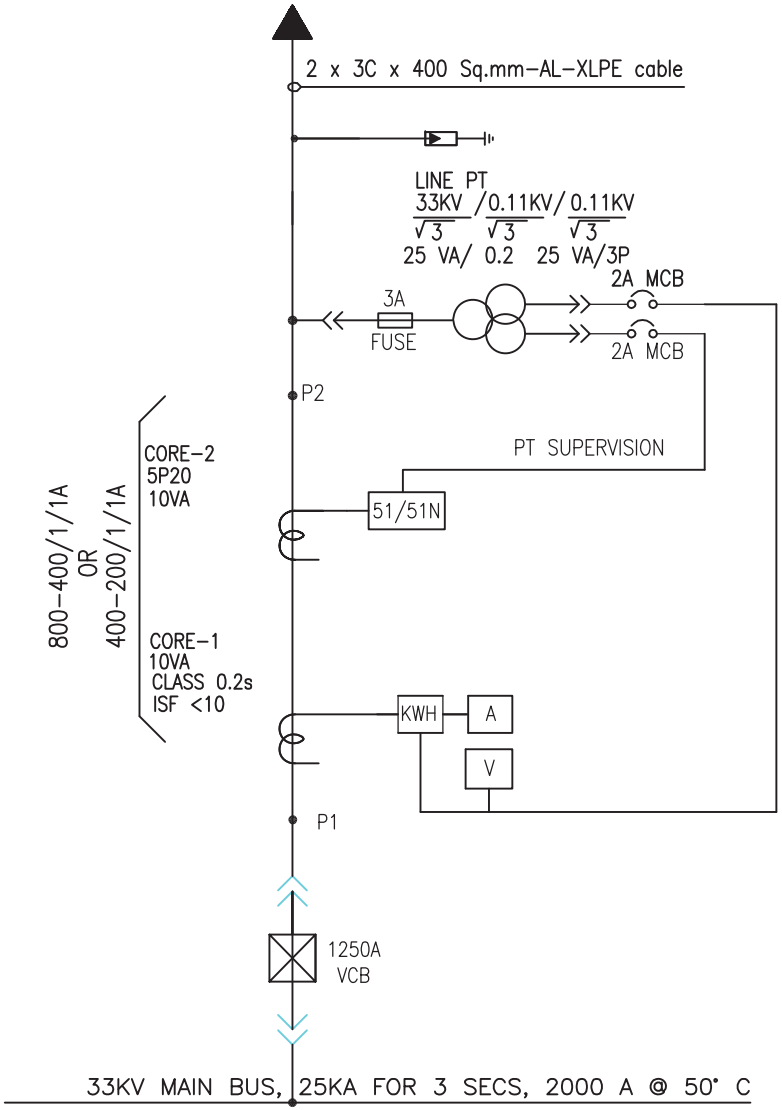

LEGEND

SYMBOL	DESCRIPTION
	11KV SF6/VACUUM CKT. BKR. DRAWOUT TYPE
	CURRENT TRANSFORMER
	POTENTIAL TRANSFORMER
	SURGE ARRESTOR
	FUSE
52X	BREAKER AUX CONTACT MULTIPLIER
74	TRIP CIRCUIT SUPERVISION RELAY
94	ANTI PUMPING RELAY
86	HIGH SPEED TRIP RELAY
V	VOLTMETER
A	AMMETER

SYMBOL	DESCRIPTION
KWH	ENERGY METER
46	NEGATIVE PHASE SEQUENCE PROTECTION
25	SYNC CHECK
51/51N	O/C & E/F RELAY
27	UNDER VOLTAGE RELAY
87	DIFFERENTIAL RELAY
21	DISTANCE RELAY
59	OVER VOLTAGE RELAY
64	REF RELAY
67/67N	DIRECTIONAL O/C & E/F RELAY
TTB	TEST TERMINAL BLOCK

NOTE:
1. KWH METER NOT IN SUPPLIER'S SCOPE
2. REFER CLAUSE 16 OF SPECIFICATION FOR DETAILED FUNCTIONAL REQUIREMENTS OF PROTECTION RELAYS
3. TTB NOT REQUIRED IN THIS PANEL

DRAWN	R.K/A.H H.K
CHECKED	S.G/A.S
APPD.	G.S/G.N
DATE	29.04.22
SCALE	NTS

TITLE

TYPICAL SLD FOR 33 KV OUTGOING FEEDER (FOR INSTALLATION AT KCC CONSUMERS PREMISES)

BSES

SPECIFICATION NO. BSES-TS-66-HTSWG-R0

SLD-SWG-33KV-04

Bidder's Name & Signature
Page 189 of 755
NIT NO CMC/BR/25-26/FK/PR/KG/1271
DocUUID : 23f7dc1d-9724-406f-b48e-bdff68bb2c4f

ANNEXURE–F10

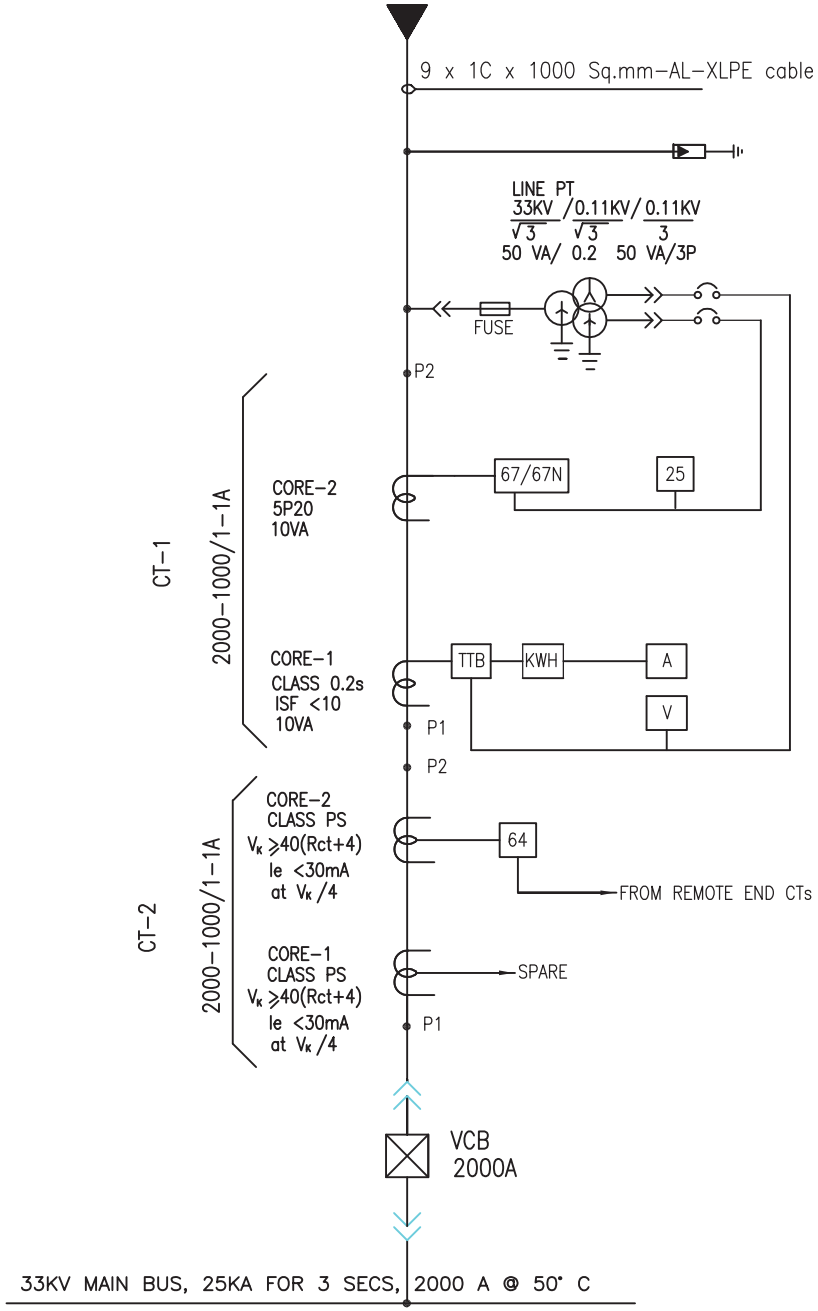

LEGEND

SYMBOL	DESCRIPTION
	11KV SF6/VACUUM CKT. BKR. DRAWOUT TYPE
	CURRENT TRANSFORMER
	POTENTIAL TRANSFORMER
	SURGE ARRESTOR
	FUSE
52X	BREAKER AUX CONTACT MULTIPLIER
74	TRIP CIRCUIT SUPERVISION RELAY
94	ANTI PUMPING RELAY
86	HIGH SPEED TRIP RELAY
V	VOLTMETER
A	AMMETER

SYMBOL	DESCRIPTION
KWH	ENERGY METER
46	NEGATIVE PHASE SEQUENCE PROTECTION
25	SYNC CHECK
51/51N	O/C & E/F RELAY
27	UNDER VOLTAGE RELAY
87	DIFFERENTIAL RELAY
21	DISTANCE RELAY
59	OVER VOLTAGE RELAY
64	REF RELAY
67/67N	DIRECTIONAL O/C & E/F RELAY
TTB	TEST TERMINAL BLOCK

NOTE: 1. KWH METER NOT IN SUPPLIER'S SCOPE
2. REFER CLAUSE 16 OF SPECIFICATION FOR DETAILED FUNCTIONAL REQUIREMENTS OF PROTECTION RELAYS

Bidder's Name & Signature

NIT NO CMC/BR/25-26/FK/PR/KG/1271

DRAWN	R.K/A.H H.K
CHECKED	S.G/A.S
APPD.	G.S/G.N
DATE	29.04.22
SCALE	NTS

TITLE
TYPICAL SLD FOR 33KV INCOMER FROM 66/33KV AUTO TRANSFORMER

BSES

SPECIFICATION NO. BSES-TS-66-HTSWG-R0

SLD-SWG-33KV-05

DocUUID : 23f7dc1d-9724-406f-b48e-bdf668bb2c4f

ANNEXURE–F11

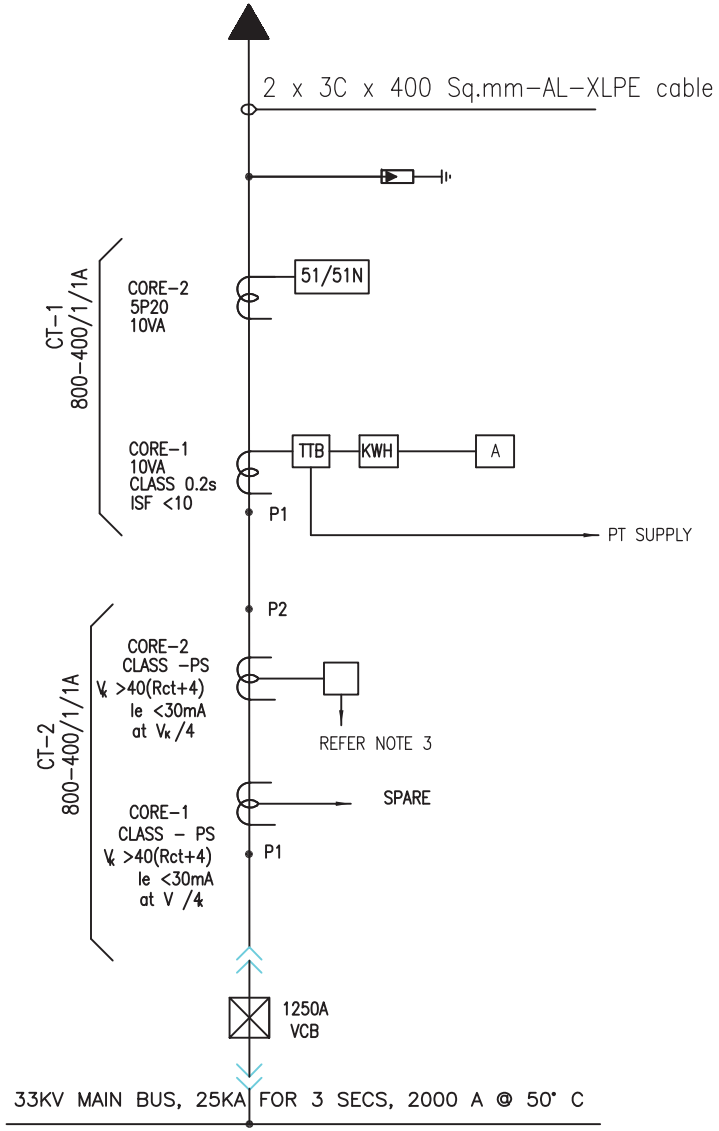

LEGEND

SYMBOL	DESCRIPTION
	11KV SF6/VACUUM CKT. BKR. DRAWOUT TYPE
	CURRENT TRANSFORMER
	POTENTIAL TRANSFORMER
	SURGE ARRESTOR
	FUSE
52X	BREAKER AUX CONTACT MULTIPLIER
74	TRIP CIRCUIT SUPERVISION RELAY
94	ANTI PUMPING RELAY
86	HIGH SPEED TRIP RELAY
V	VOLTMETER
A	AMMETER

SYMBOL	DESCRIPTION
KWH	ENERGY METER
46	NEGATIVE PHASE SEQUENCE PROTECTION
25	SYNC CHECK
51/51N	O/C & E/F RELAY
27	UNDER VOLTAGE RELAY
87	DIFFERENTIAL RELAY
21	DISTANCE RELAY
59	OVER VOLTAGE RELAY
64	REF RELAY
67/67N	DIRECTIONAL O/C & E/F RELAY
TTB	TEST TERMINAL BLOCK

NOTE:
1. KWH METER NOT IN SUPPLIER'S SCOPE
2. REFER CLAUSE 16 OF SPECIFICATION FOR DETAILED FUNCTIONAL REQUIREMENTS OF PROTECTION RELAYS
3. LINE DIFFERENTIAL OR DISTANCE RELAY. REFER CLAUSE 16.12.1 OF SPECIFICATION

Bidder's Name & Signature

NIT NO CMC/BR/25-26/FK/PR/KG/1271

DRAWN	R.K/A.H H.K
CHECKED	S.G/A.S
APPD.	G.S/G.N
DATE	29.04.22
SCALE	NTS

TITLE
TYPICAL SLD FOR 33KV OUTGOING FROM 66/33KV AUTO TRANSFORMER

BSES

SPECIFICATION NO. BSES-TS-66-HTSWG-R0

SLD-SWG-33KV-06

DocUUID : 23f7dc1d-9724-406f-b48e-bdff68bb2c4f

ANNEXURE–F12

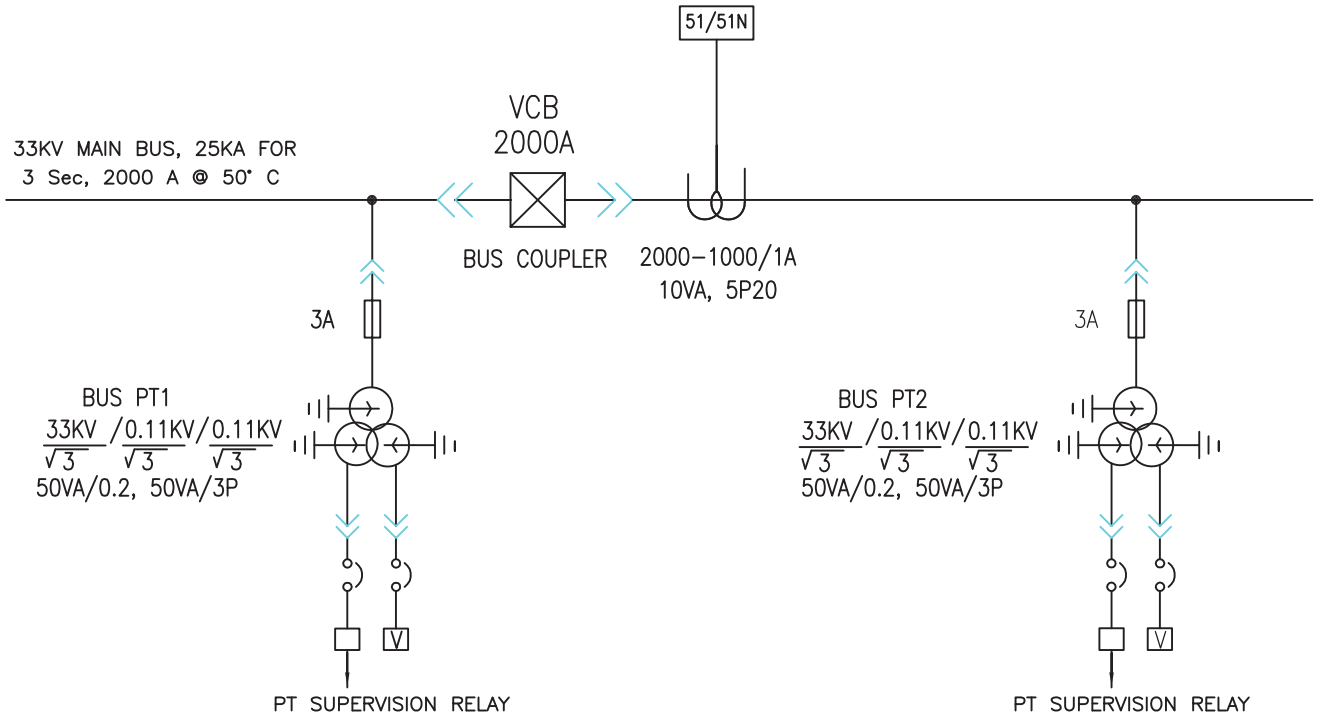

LEGEND

SYMBOL	DESCRIPTION
	11KV SF6/VACUUM CKT. BKR. DRAWOUT TYPE
	CURRENT TRANSFORMER
	POTENTIAL TRANSFORMER
	SURGE ARRESTOR
	FUSE
52X	BREAKER AUX CONTACT MULTIPLIER
74	TRIP CIRCUIT SUPERVISION RELAY
94	ANTI PUMPING RELAY
86	HIGH SPEED TRIP RELAY
V	VOLTMETER
A	AMMETER

SYMBOL	DESCRIPTION
KWH	ENERGY METER
46	NEGATIVE PHASE SEQUENCE PROTECTION
25	SYNC CHECK
51/51N	O/C & E/F RELAY
27	UNDER VOLTAGE RELAY
87	DIFFERENTIAL RELAY
21	DISTANCE RELAY
59	OVER VOLTAGE RELAY
64	REF RELAY
67/67N	DIRECTIONAL O/C & E/F RELAY
TTB	TEST TERMINAL BLOCK

NOTE:–

1. REFER CLAUSE 16 OF SPECIFICATION FOR DETAILED FUNCTIONAL REQUIREMENTS OF PROTECTION RELAYS

DRAWN	R.K/A.H H.K
CHECKED	S.G/A.S
APPD.	G.S/G.N
DATE	29.04.22
SCALE	NTS

TITLE

TYPICAL SLD FOR BUS COUPLER CUM BUS PT PANEL FOR 33KV SWITCH BOARD OF 66/33KV AUTO TRANSFORMER

BSES

SPECIFICATION NO. BSES-TS-66-HTSWG-R0

SLD-SWG-33KV-07

Bidder's Name & Signature
Page 192 of 755
NIT NO CMC/BR/25-26/FK/PR/KG/1271
DocUUID : 23f7dc1d-9724-406f-b48e-bdff68bb2c4f

BSES

BSES RAJDHANI POWER LIMITED

Technical Specification for

11 kV Segregated Phase Bus Duct

For 66/11 kV G-4 Grid Substation

Specification No. GN101-03-SP-54-00

Prepared by:	Sign:	Approved by:	Sign:	Rev	Date
Hemanshi Kaul		Kiran Alla		R0	July 14, 2015

Kiran Kumar Alla
HoD - Central Engg Services
Emp. No. 41015970
BSES Rajdhani Power Ltd.

Contents

S. No.	Particulars	Page No.
1.0	Intent of Specification	3
2.0	Scope	3
3.0	Codes & Standards	3
4.0	Major Design criteria	4
5.0	Drawing, Data & manual	9
6.0	Approved Makes	9
7.0	Quality Assurance	9
8.0	Enclosures	9
8.1	Annexure A – General Technical Particulars	10
8.2	Annexure B – Service Conditions	11
8.3	Annexure C- General Technical Particulars (Data by Bidder)	12,13
8.4	Annexure D – Site Layout and Suggestive Sectional View	

1. **Intent of Specification:**

This specification covers the design, manufacturing, testing at manufacturer's work, packing and delivery at site/stores of purchaser including installation and successful commissioning of 11 kV Segregated Phase Bus Duct at site.

2. **Scope:**

a. Design, manufacture, testing at manufacturer works before dispatch, packing, and delivery of Bus Duct as per this specification and supply of commissioning spares.

b. Supply and installation of Bus Duct including all accessories.

c. Submission of drawing documentation of Bus Duct.

d. Supervision of testing & commissioning of Bus Duct at site.

3. **Relevant standard:**

S. No.	Standard No.	Standard Details
1	IS 8084	Specification for interconnecting Bus bar for AC voltage above 1Kv up to and including 36Kv.
2	IS 2544	Porcelain post insulators for systems with nominal voltage greater than 1000 Volts (first revision)
3	IS 5350 Part - 1	Dimensions of indoor and outdoor porcelain post insulator and post insulator units for system with nominal voltage greater than 1000 V: Part 1 Indoor post insulators
4	IS 9431:1979	Indoor post insulators of organic material for systems with nominal voltages greater than 1 000 V up to and including 300 kV
5	IS 4759	Hot Dip Zinc coating on structural steel and allied product
6	IS 2629	Recommended Practice for Hot Dip Galvanizing of Iron and steel
7	IS 2062-1999	Hot Rolled Low, medium and high tensile Structural Steel
8	IS 2099	Bushing for alternating voltage above 1000V
9	IS 1893	Criteria for earthquake resistant design of structure
10	IEEE No. 298	Temperature rise calculations
11	IEEE Std. C37.023	Metal enclosed Bus Duct
12	IEC 62271-200	AC Metal enclosed switchgear and Control gear for Rated Voltages above 1 kV and up to and including 52 kV
13	IEC 62271-1	High Voltage switchgear and Control gear – Part 1: Common specifications
14	IEC 60694	Common Specification for high voltage switchgear and Control gear standards
15	IEC 60060	High-voltage test techniques. Part 1: General definitions and test requirements
16	IS 875	Code of practice of design loads (other than earthquake) for buildings and structures
17	IS 800	General Construction in Steel - Code of Practice
18	CBIP Manual	CBIP manual on busduct 2007 - Publication number 303
19		Any other relevant standard

4. Major Design Criteria:

MAJOR DESIGN CRITERIA FOR SEGREGATED PHASE BUS DUCT		
4.1	**Enclosure**	
4.1.1	General	The three phases shall be enclosed in a weather-proof, dust-tight, phase segregated type with non-magnetic metal
4.1.2	Shape	Preferably rectangular in shape.
4.1.3	Dimensions	As per design, maintaining necessary clearance as per relevant IS
4.1.4	Material and Thickness	Aluminum alloy of min 3mm thickness
4.1.5	Slope	Bus duct shall be with plain top
4.1.6	Phase Barriers	i. Phase barriers shall be provided in the bus duct for phase segregation. Ii. The barrier shall be welded to the enclosure.
4.1.7	Identification	For identification of each part of bus duct or accessories for installation at site, appropriate match mark or part number shall be done
4.1.8	Gasket	i. Flange gasket of neoprene shall be provided for the dust tight joints between adjacent enclosure sections ii. Gasket shall be preferably of the joint less type
4.1.9	Expansion Bellows	i. Rubber below shall be provided with pressure plate to withstand vibration, expansion or contraction at equipment terminations. ii. Shall be provided at suitable intervals in any straight run of bus duct where the expansion and contraction would otherwise result in stress of the supporting structures. iii. Shall be weather-proof, non - deteriorating type without any adverse impact with exposure to sunrays, rain etc.
4.1.10	Inspection Opening	i. Shall be provided (on top surface) to allow easy access to support insulator, bus joints, switchgear terminals, etc., for maintenance, checking and replacement. ii. All inspection openings shall have reliable sealing arrangement with neoprene gasket.
4.1.11	Seal off bushings	Epoxy resin cast seal-off bushings complete with wall frame and support plates shall be provided at all wall crossings to avoid propagation of fire and free exchange of air.
4.1.12	Wall frame assembly	During detailed Engineering
4.1.13	Drain plugs	i. To be provided at the lowest points and at such locations where accumulation of condensate can be expected. ii. Drain plug shall be located at suitable place convenient to

		operate.
4.1.14	Silica Gel Breathers with dust filter	Shall be provided and designed for easy maintenance
4.1.15	Hardware	Hardware for flange joints shall be of electro galvanized MS. (bolt+1N+1SW+2PW-HTS Zn Plated).
4.2	**Bus Conductor**	
4.2.1	Design	i. The bus conductor shall be of electrolytic grade tinned copper supported on wet processed insulators designed to withstand dynamic stress due to the specified short circuit current and other forces. ii. The bus conductor shall be designed for bolted connections throughout the run (high grade stainless steel nuts bolts plain and belle-ville washers). iii. Copper Flexible connections shall be provided minimum at 10mtrs interval between bus sections to allow for expansion and contraction of the conductor. Flexible connections shall be provided at all equipment terminations. iv) All contact surfaces shall be silver plated to ensure an efficient and trouble - free connection. All connection hardware shall be non-magnetic and shall have high corrosion resistance. v) Bus bar calculations shall be submitted to the purchaser along with the drawings and documentation for approval. All de-rating factors applicable shall be taken into consideration. Bimetallic connectors of approved make shall be used for connections where bus conductor material is different. vi) Necessary space and arrangement for transposing of phase conductor to match the phase sequence of end panels' Bus bar.
4.2.2	Marking and identification	All bus bars shall be color coded as Red, Yellow and Blue at regular intervals for easy identification of phases
4.3	**Insulators**	
4.3.1	Type	Bus support insulators shall be interchangeable, high creep and high strength, wet process, suitable for heavily polluted atmosphere. Creepage distance of 31mm/kV
4.3.2	Stress Concentration	The insulator shall avoid stress concentration due to direct engagement with the metal fittings
4.3.3	Inspection / Removal / Replacement	The insulator shall be designed and mounted in such a manner so as to facilitate easy inspection, removal and replacement without disturbing the conductor.
4.3.4	Insulator Mounting Plate	Shall be designed for cantilever loading to withstand the short circuit forces.

4.3.5	Conductor mounting on insulator	The conductor shall be fastened on the insulator through fixed and slip joints so as to allow conductor expansion or contraction without straining the insulator
4.3.6	Insulating support at bends	Additional support insulators shall be provided at bends for withstanding all possible forces
4.4	**Terminations at equipment ends**	
4.4.1	Accessories	All matching flanges, flexible connections, phase changeover boxes / adaptor boxes, gaskets, fittings, hardware and support required for termination of the bus duct at switchgear ends shall be provided.
4.4.2	Termination Adaptor	i. Supply the required adaptor of suitable dimension to match with terminating equipment
		For terminating the bus conductors at the switchgear terminals suitable flexible connections shall be provided.
		Flexible connection at equipment termination shall be able to take care of misalignment up to 25mm in all directions.
4.5	**Conductor Joints / Flexible Links**	
4.5.1	Contact surface	All joints in the bus conductor shall be plain
4.5.2	Flexible links type and material	i. Braids or multiple laminations ii. Shall be copper with silver plating on both contact surfaces for termination. iii. Shall be Copper for switchgear termination. iv. Shall be Copper for expansion joints in the bus conductor. v. The palms of Copper flexible shall be of welded construction only.
4.5.3	Hardware	Bolts and nuts for main bus bar joints shall be of high grade stainless steel, with plain / spring steel belle-ville washers (Bolt+1N+1SW+2PW-HTS Zn Plated)
4.5.4	Bi-metallic connectors	Shall be provided wherever the material of bus conductor and equipment terminals are different
4.6	**Earthing**	
4.6.1	Earthing conductor	i. Continuous earth conductor shall be provided along the entire run of each bus duct on the outside mandatorily. Ii. Shall carry the rated short -circuit withstand current for rated duration of short-circuit and shall be at least 50X6mm copper strip iii. All parts of the bus enclosure and supporting structure shall be bonded to the above ear thing bus. iv. Drilled holes on the enclosure for the purpose of mounting of the earthing conductor will not be permitted, to prevent ingress

		of water.
4.6.2	Terminal pads	i. Earthing pads with hardware shall be provided on both ends of the earthing conductor to connect the riser from station earthing grid. Ii. Shall have drilled holes for bolting.
4.7	**Supporting arrangement**	
4.7.1	Scope	All supporting structures required for hanging and/or supporting the complete bus duct shall be furnished. These include all members, indoor posts, bolts, shims, base plates, beams, hangers, brackets, bracings and hardware.
4.7.2	Material	Shall be of high strength steel with weather resistant finish as per IS 2062-99
4.7.3	Design Considerations	i. Design shall be done conforming to IS 800 ii. The bus duct shall be adequately supported and braced to successfully withstand normal operation, vibration, thermal expansion, short circuit forces, seismic forces and all specified design load all along its route. iii. All supporting members and hardware shall be designed to limit the transmission of bus duct and supporting member weight forces to equipment. iv. Safety factor of 2.0 shall be used.
4.7.4	Supporting arrangement	Indoor portion of the bus ducts shall be hanging and supported from roof beams or steel inserts in roof / wall
4.7.5	Tolerance	Supports shall be designed to provide tolerance of +/- 12mm (1/2") in the horizontal and vertical directions.
4.7.6	Galvanization	i. All steel members shall be hot -dip galvanized as per IS 4759 and IS 2629. ii. Minimum thickness of zinc coating shall not be less than 610g/sq.m or 86 micron
4.8	**Space heater**	
4.8.1	Provision	The bus duct shall be provide with adequate number of space heaters mounted on insulated feet to maintain internal temperature above the dew point
4.8.2	Temperature control	By an adjustable thermostat, factory set to close at 30 Deg C(ON) and open at 65Deg C (OFF)

4.8.3	Internal Wiring	i. Space heater and thermostat shall be wired up to terminals in terminal boxes mounted on the bus duct, for external cable connections. Ii. The wiring inside the bus duct shall be done with 1100V grade high temperature resistance cable suitable for the bus duct maximum temperature. iii. The minimum size of stranded copper conductor shall be 2.5sqmm iv. All wires inside the bus duct shall be laid in the GI Conduit. v. Terminal boxes shall be provided with removable gland plated for cable entry.
4.8.4	Marshalling Box	Marshalling box suitable for wall mounting shall be supplied. It shall house the ON/OFF switch, Contactor and other controls / wiring as required.
4.8.5	External Cabling	Cable from terminal boxes to marshalling box shall be in purchasers scope
4.8.6	Power supply	240V single phase 50Hz shall be cabled by the purchaser to the marshalling box
4.8.7	Control Terminal blocks	i. Box-clamp type suitable for 2x2.5 Sq.mm. copper conductor with marking strips. ii. Not more than two wires shall be connected to one terminal
4.8.8	Spare terminals	20% of active terminals shall be provided in the terminal box
4.9	**Painting**	
		i. All surfaces shall be thoroughly cleaned and cleared of all blemishes. De-rusting, degreasing, etc shall be done before painting or galvanizing. Paints shall be carefully selected to withstand heat. The paints shall not scale off or crinkle or get removed by abrasion due to normal handling. ii. Except for support steel structures (which shall be galvanized), all equipment shall be finished with an undercoat of high quality primer followed by two coats of synthetic enamel paints unless otherwise epoxy paints as specifically required. iii. The interior surface finish shall be as per manufacturer's standard. The shade of exterior surface finish for indoor shade shall be informed during detail engineering. iv. Sufficient quantities of all paints and preservatives required for touching up at sites shall be furnished.
4.10	**Nameplate**	
4.10.1	Material for nameplate	Aluminium / stainless steel, 1mm thick, using black letters

		i. Subject to approval during detailed engineering ii. Details on the nameplate shall be as per IS:8084
4.11	**Special Tools & Tackles**	
		i. A set of special tools & tackles which are necessary or convenient for erection, commissioning, maintenance and overhauling of the equipment shall be supplied. ii.The tools shall be shipped in separate containers, clearly marked with the name of the equipment for which they are intended.
4.12	**Spares**	The Bidder shall submit a list of recommended spare parts for five (5) years for satisfactory and trouble free operation, indicating the itemized price of each item of the spares.

5. Drawing, data & manuals:

a. General Arrangement Drawing – Plan and Sections.
b. Typical details of bus-insulator assembly, conductor/enclosure connections rigid & flexible, seal-off bushings, connection with transformer & switchgear terminals, etc.
c. Bill of Materials.
d. Technical leaflets/Write-ups on various pieces of equipment offered.
e. Calculation for temperature rise for bus and enclosure as per IEEE No. 298.
f. Calculation for short circuit forces justifying the proposed arrangement.
g. Type test reports on similar equipment.

6. Approved Makes:

Sl. No.	**Description of Item**	**Approved 'Makes'**
1	Electrolytic grade tinned copper	
2	Bus support insulator	
3	Seal off bushing	
4	Flexible bellow	
5	Flexible conductor	
6	Gaskets	

7. Quality Assurance:

Bidder shall submit the Quality Assurance Plan along with the Guaranteed Technical Particulars.

8. Enclosure:

a. Annexure A – General Technical Particulars
b. Annexure B – Service Conditions
c. Annexure C – General Technical Particulars (Data by Bidder)
d. Annexure D – Site Layout and Suggestive Sectional View

Annexure A – General Technical Particulars

RATINGS & REQUIREMENTS		
1	**GENERAL (Applicable to all equipment)**	**11000 V SYSTEM**
1.1	System nominal voltage	11000 V
1.2	System maximum voltage	12000 V
1.3	Number of phases	3
1.4	Frequency	50 Hz
1.5	Neutral Grounding	Neutral solidly grounded
1.6	Insulation level	
	a. 1-min. power frequency withstand	28 kV rms
	b. Impulse withstand	75 kV peak
1.7	Creepage distance	31mm/kV
1.8	Short Circuit Level	26.3 kA for 3 Sec.
1.9	Ambient Temperature	50°C
1.10	Humidity	100%
2	**BUS DUCT**	
2.1	Type	Phase segregated self-cooled
2.2	Service	Indoor
2.3	Rated hottest-spot temperature rise (Over 50°C ambient)	a. Bus conductor i. Plain joint 35°C ii. Silver plated joints 55°C b. Bus enclosure & Structure 20°C
3	**Material**	
3.1	Bus conductor	Electrolytic grade tinned copper
3.2	Rated Continuous Current in Amp	2000A
3.3	Short circuit rating of Bus Bar	26.3kA for 3 sec
3.4	Bus enclosure	Aluminum Alloy grade 19501, 60% IACS (min 3 mm thick)
3.5	Inter-phase barrier	Aluminum alloy (min 3 mm thick)
3.6	Enclosure Protection Class	IP-52 for Indoor Installation (Min)
4	**Clearances**	As per relevant IS

Annexure B – Service Condition

S. No.	Particulars	Data
1	Average grade atmosphere pollution level	Heavy polluted , dry
2	Maximum altitude above Sea level	1000 M
3	Ambient Air temperature	Highest 50 deg C, Average 40 deg C
4	Relative Humidity	100 % Max
5	Seismic Zone	IV as per IS 1893
6	Rainfall	750 mm concentrated in four months
7	Wind Pressure	195 Kg/m2 up to 30 M elevation as per IS 875-1975

Annexure C: Guaranteed Technical Particular (Data to be filled by bidder)

S. No.	**Particulars**	**Data by Purchaser**	**Data by Bidder**
1	**General**		
1.1	System nominal voltage	11000 V	
1.2	System maximum voltage	12000 V	
1.3	Number of phases	3	
1.4	Frequency	50 Hz	
1.5	Neutral Grounding	Neutral solidly grounded	
1.6	Insulation level		
	a. 1-min. power frequency withstand	28 kV rms	
	b. Impulse withstand	75 kV peak	
1.7	Creepage distance	31mm/kV	
1.8	Short Circuit Level	26.3 kA for 3 Sec.	
1.9	Ambient Temperature	50°C	
1.10	Humidity	100%	
2	**BUS DUCT**		
2.1	Type	Phase segregated self-cooled	
2.2	Service	Indoor	
2.3	Rated hottest-spot temperature rise (Over 50°C ambient)	c. Bus conductor i. Plain joint 35°C ii. Silver plated joints 55°C d. Bus enclosure & Structure 20°C	
2.4	Overall dimensions (LxBxH)		
3	**Material**		
3.1	Bus conductor Material	Electrolytic grade tinned copper	
3.2	Rated Continuous Current in Amp	2000A	
3.3	Short circuit rating of Bus	26.3kA for 3 sec	

	Bar		
3.4	Bus enclosure	Aluminium Alloy grade 19501, 60% IACS (min 3 mm thick)	
3.5	Inter-phase barrier	Aluminium alloy (min 3 mm thick)	
3.6	Enclosure Protection Class	IP-52 for Indoor Installation (Min)	
3.7	Bus Bar Size (LxBxT)(mm)		
4	**Clearances**	As per relevant IS	

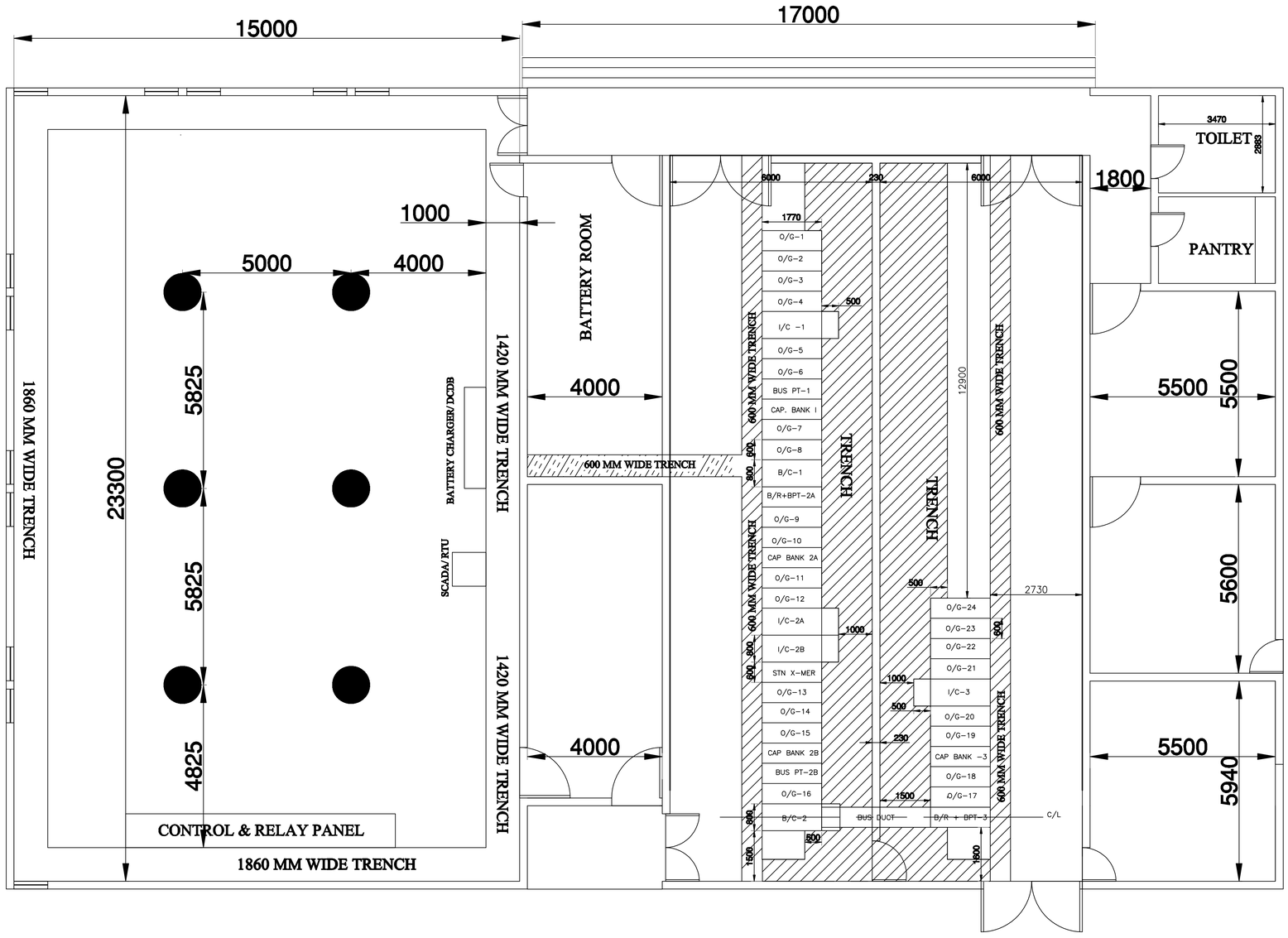

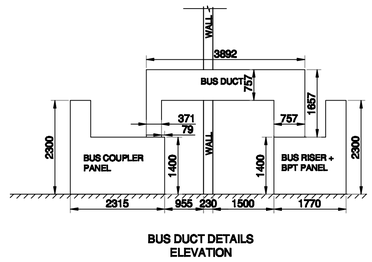

BUS DUCT DETAILS ELEVATION

NOTE:
1. FLENGE DETAILS FOR BUS DUCT SHALL BE AS PER PANEL MANUFACTURER DRAWING.
2. NECESSARY ARRANGEMENT FOR PHASE CROSS OVER IN THE BUS DUCT NEED TO BE PROVIDED.
3. CLEAR HEIGHT BENEATH THE BUS DUCT IS TO BE MAINTAINED AS PER DRAWING.
4. DIMENSIONS OF BUS DUCT SHALL BE DECIDED AS PER DESIGN, CONSIDERING SECTIONAL CLEARANCES.

NOTE:
1. CONTROL PANEL DIMESIONS & OTHER DETAILS SHALL BE AS PER MANUFACTURER DRAWING.
2. BATTERY CHARGER, DCDB AND ACDB DIMENSIONS SHALL BE AS PER MANUFACTURER DRAWING.
3. SECTIONAL DETAILS OF ALL THE TRENCH HAS ALREADY BEEN RELEASED VIDE DRAWING NO.BRPL/ CES / G-4 DWARKA/ C /POWER CABLE TRENCH SECTION/ 001; DATED 04-08-2014.
4. WIDTH OF CONTROL CABLE TRENCH IN FRONT OF 11 kV PANELS HAS BEEN REVISED TO 600 MM.
5. WIDTH OF 11 kV PANELS:
   ALL INCOMMERS, BUS COUPLERS - 800 MM
   ALL OUTGOINGS, STATION TRANSFORMERS, CAPACITOR BANKS, BUS RISERS AND BUS PT - 600 MM
   (REFER MANUFACTURER'S DRAWING)

TITLE:
GENERAL ARRANGEMENT OF 11 kV PANELS

PROJECT:
66/11 kV SUBSTATION AT G-4, SECTOR - 18 DWARKA

BSES RAJDHANI POWER LIMITED
CENTRAL ENGINEERING SERVICES
BUILDING NO. 20, 5th FLOOR,
NEHRU PLACE, NEW DELHI -110019

					DRAWN:	REVIEWED: / SHEET: A1
					CHECKED:	APPROVED: / SCALE: NTS
					REF.NO.:	DATE:
		AS PER APPROVED PANEL DRAWING	01	17-06-2015	DRAWING NO: BRPL/ CES / G-4 DWARKA/ E /11 kV PANEL ARRANGEMENT/ 001;	REV.NO.: 00 / DATE: 14-10-2014
APPROVED	CHECKED	REASON	REV. No.	DATE		

Signature

BSES

Technical Specification

For

SMPS Based Battery Charger

Specification no – BSES-TS-73-SMPSBC-R0

Rev		0
Page		1 of 11
Date		05 May 2022
Prepared by	Abhishek Harsh	
	Amar Singh	
Reviewed by	Srinivas Gopu	
	Abhinav Srivastava	
Approved by	Gaurav Sharma	
	Gopal Nariya	

INDEX

1 SCOPE OF SUPPLY 3
2 CODES & STANDARDS 3
3 SERVICE CONDITIONS 3
4 CHARGER DESIGN FEATURES 4
5 METERING, ANNUNCIATION & INDICATION 5
6 APPROVED MAKE OF COMPONENTS 7
7 MIMIC DIAGRAM, LABEL & FINISH 7
8 QUALITY ASSURANCE, INSPECTION & TESTING 8
9 DEVIATIONS 8
10 GTP 8
11 DRAWING AND DATA SUBMISSION MATRIX 9
12 PACKING 10
13 SHIPPING 11
14 HANDLING AND STORAGE 11

1 SCOPE OF SUPPLY

This specification covers the design, manufacturing, testing, supply, erection & commissioning of 20 VDC/ 50 VDC SMPS based 2X100% Float Cum Boost Charger at site for indoor installation with all necessary accessories associated with it.
Specification covers Type 1 and Type 2 Battery Charger. Type 1 Battery Charger is for Grid Substations while Type 2 Battery Charger is for BSES HT Customers.

.

2 CODES & STANDARDS

Material, equipment and methods used in the manufacture of battery charger shall confirm to the latest edition of following

Indian Electricity Rules	
Indian electricity act	
CBIP manual	
IS 3895	Specification for rectifier equipment in general
IS 5921	Printed circuit boards
IS 6619	Safety code for semiconductor devices
IS 4540	Semiconductor rectifier assemblies and equipment
IS 694	PVC Insulated Cables for Working Voltage up to and including 1100V
IS 1248	Direct Acting Electrical indicating instruments
IS 2705	Current transformer
IS 3156	Voltage transformer
IS 3231	Electric relay for power system protection
IS 5578	Guide for making of insulated conductors
IS 8623	Low voltage switchgear and control gear assemblies
IS 13703	Low voltage fuses for voltages not exceeding 1000AC
IS 12063	Degree of enclosure protection
IS5	Color of mixed paints
IS 6297	Transformer & inductors for electronic equipment
IS 6553	Environment requirements for semiconductor device
IS 4007	Terminals for electronic equipment

3 SERVICE CONDITIONS

3.1	Max Ambient Temperature	50 deg C
3.2	Max Daily average ambient temp	40 deg C
3.3	Min Ambient Temp	0 deg C
3.4	Maximum Humidity	95%
3.5	Minimum Humidity	10%
3.6	Maximum annual rainfall	750 mm

3.7	Average no of rainy days per annum	60
3.8	Rainy months	June to Oct
3.9	Altitude above MSL	300 M
3.10	Seismic Zone	IV

4 CHARGER DESIGN FEATURES

4.1	Type	SMPS Based
4.2	Rating	For Type-1 Battery Charger a. 70 A for 50 V b. 35 A for 220 V For Type-2 Battery Charger a. 35 A for 50 V b. 20 A for 220 V
4.3	Configuration	2X100% Float cum Boost Charger.
4.4	Incoming Supply	Provision of Two Incoming Supply with Auto Changeover Facility
4.5	Automatic Phase Sequence Corrector	a. For 3 phase supply in right sequence, phase conversion. b. Protect equipment from phase reversal, phase loss.
4.6	Panel type	Metal enclosed frame construction
4.7	Overall Dimension	L - 1500 mm x D - 700 mm x H - 1900 mm
4.8	Cable Entry	Bottom
4.9	Location	Indoor, non air conditioned environment
4.10	Doors for front access	With anti theft hinge &handle
4.11	Cover for rear access	With Allen screw M6 size & handle
4.12	Construction	Sheet metal 2.0mm thick CRCA
4.13	Base frame	75mm ISMC
4.14	Lifting lugs	Four number
4.15	Gland plate	3mm metallic, un drilled & removable type
4.16	Enclosure protection	IP42 Minimum
4.17	Power terminal	Bus bar type, minimum 300mm above gland plate
4.18	Control terminal	Nylon66 with brass clamp
4.19	Bus bar	Tinned copper with insulation sleeve
4.20	Earth bus bar	Aluminum sized for rated fault duty for 1sec
4.21	Earth bus internal connection to all non current carrying metal parts	By copper flexible wire 2.5 sqmm
4.22	Earth bus external connection to owner earth	Al bus on both sides of panel with two holes for M10 bolt
4.23	Cooling	With Exhaust Fan
4.24	Panel heater	Thermostatically controlled through MCB
4.25	Panel internal wiring	Multi strand flexible color coded PVC insulated copper wire 1.5 sqmm 1100volt grade with 1.5 sqmm ferruling

		(other than circuit wiring related to PCB cards)
4.26	Isolation & protection device	Mounted at height minimum 1000mm from bottom
4.26.1	MCCB	For charger input, output & battery input
4.26.2	Battery & test resistor load	Lockable change over switch with one position for charger, second for 'OFF' & third position for external test resistor.
4.27	Hardware (Nut, bolts & handle)	Stainless steel
4.28	Essential provision	Surge suppression, harmonic suppression, blocking diodes, filters for ripple control
4.29	Insulating shrouds	On all live parts, power semi conductors & electronic components
4.30	Ripple content in DC output	0.5 % maximum
4.31	DC output voltage regulation	Maximum ±1% of rating with AC input supply variation of ±10% from 415 volts, frequency variation of ±5% from 50 HZ and simultaneous load variation of 0-100%
4.32	Reverse polarity connection	Protected against reversed battery polarity
4.33	Charger efficiency	90% minimum at Rated Load
4.34	Noise output	65DB maximum
4.35	Charger selector switch	For auto/manual and float/boost selection, lockable type inside panel
4.36	Charging current settings	25% to 100% of rating
4.37	Charging current accuracy	2% of set current with input voltage variation of ±10% and frequency variation of ±5%
4.38	Auto and Manual DC output adjustment range for float & boost charge (voltage & current)	By potentiometers inside panel, range suitable for battery bank. Charger suitable for other type of batteries if offered, shall be subject to buyer's approval.
4.39	Louvers	With stainless steel wire mesh
4.40	Gasket	Neoprene rubber
4.41	Panel illumination lamp with door switch	MCB controlled, with 5/15amp switch socket
4.42	Panel door keys	4 no. per panel, identical key for all panels
4.43	PCBs for electronic circuitry	With protective layer finish at back
4.44	PCB soldering	Preferably by wave soldering process
4.45	PCB/ electronic card mounting	With press fit type locking arrangement
4.46	Semiconductor component mounting	Shall not be on bakelite sheet

5 METERING, ANNUNCIATION & INDICATION

5.1	Ammeter (96x96mm)	Digital type, for AC input, DC output & battery current. Auxiliary supply for meters should be 48V to 230V AC/DC (Universal type)
5.2	Voltmeter (96x96mm)	Digital type, with selector switch for AC input, DC output & battery voltage. Auxiliary supply for meters should be 48V to 230V AC/DC (Universal type)

5.3	LED indication on panel front	
5.3.1	Status	
5.3.1.1	Input AC supply available on R,Y & B phase	Red/yellow/blue color LED
5.3.1.2	Float cum Boost charger AC MCCB 'ON'	Red color LED for each charger module
5.3.1.3	Charger output DC 'ON'	Red color LED for each charger module
5.3.1.4	Outgoing DCDB feeder ON	Red color LED for each other
5.3.2	Fault	
5.3.2.1	DC earth fault	Amber color LED
5.3.2.2	Battery MCCB OFF	Amber color LED
5.3.2.3	Charger output DC under/ over voltage	Amber color LED
5.3.2.4	AC mains undervoltage	Amber color LED
5.4	Annunciation	Hooter with isolating switch for fault annunciation.
5.5	Potential free contacts for remote indication to be wired upto terminal block	a. AC under voltage b. AC over voltage c. CH-A AC MCCB trip/OFF d. CH-B AC MCCB trip/OFF e. CH-A Rect/Cond. fuse fail f. CH-B Rect/Cond. fuse fail g. CH-A DC MCCB trip/OFF h. CH-B DC MCCB trip/OFF i. Battery MCCB trip/OFF j. CH-A DC under voltage k. CH-B DC under voltage l. CH-A DC over voltage m. CH-B DC over voltage n. Battery DC under voltage o. Battery DC over voltage p. DC Bus over voltage q. DC Earth fault r. Battery Charger in boost mode
5.6	Microprocessor based monitoring unit cum controller	Charger should have a microprocessor based controller
5.6.1	Analog signals to be monitored by controller	a. AC Input Voltage and current b. DC output voltage and current for Charger -1 and Charger -2 c. Battery voltage and current
5.6.2	Alarms/Faults signals to be monitored by controller	a. AC under voltage b. AC over voltage c. CH-A AC MCCB trip/OFF d. CH-B AC MCCB trip/OFF e. CH-A Rect/Cond. fuse fail f. CH-B Rect/Cond. fuse fail g. CH-A DC MCCB trip/OFF h. CH-B DC MCCB trip/OFF i. Battery MCCB trip/OFF

		j. CH-A DC under voltage k. CH-B DC under voltage l. CH-A DC over voltage m. CH-B DC over voltage n. Battery DC under voltage o. Battery DC over voltage p. DC Bus over voltage q. DC Earth fault r. Battery Charger in boost mode
5.6.3	SCADA Interfacing	Microprocessor controller should have RS485 port capable of transmitting all analog and alarm/fault signal to RTU on open MODBUS protocol. Any hardware/software required to achieve the said compatibility shall be in bidder's scope.
5.6.4	Display	Backlit display capable of displaying all the analog and fault/alarm signals mentioned above.

6 APPROVED MAKE OF COMPONENTS

6.1	Switch	Siemens / L&T (Salzer)
6.2	HRC Fuse Links	GE/ Siemens/ L&T
6.3	Diodes & SCR	Hirect/USHA/IOR
6.4	Meters	AE/Rishabh
6.5	AC Contractors &O/L Relay	L&T/Siemens/Telemechanique/GE/ABB
6.6	Terminals	Connectwell/Elmex/Wago/Phoenix
6.7	Push buttons / Actuator	L&T/Siemens/Vaishno
6.8	MCCB	L&T/Siemens/ ABB/GE
6.9	MCB	Datar/Legrand/Hager/Schneider
6.10	Indicating lamps LED type	Vaishno/Binay/Teknic/Siemens/Mimic

7 MIMIC DIAGRAM, LABEL & FINISH

7.1	Mimic diagram	To be provided
7.2	Name plate on panel front	
7.2.1	Material	Anodized aluminum 16SWG
7.2.2	Background	SATIN SILVER
7.2.3	Letter, diagram & boder	Black
7.2.4	Process	Etching
7.2.5	Name plate details	a. Manufacturer name b. Month & year of manufacture c. Equipment type d. Input & Output rating e. Owner name & order number f. Guarantee period g. Weight of panel h. Degree of protection i. Sr. No.
7.3	Labels for meters, indication &	Anodized aluminum with white character on black

	all cards / sub assemblies in panel	background
7.4	Danger plate on front & rear side	Anodized aluminum with white letters on red background
7.5	Painting surface preparation	Shot blasting or chemical 7 tank process
7.6	Painting external finish	Powder coated polyester base grade A, shade –RAL 7032, uniform
7.7	Painting internal finish	Powder coated polyester base grade A, shade – white, uniform thickness 50 micron minimum
7.8	Labels for all components in panel	Anodized aluminum with white character on black background, fixed by rivets only
7.9	SLD	SLD of charges shall be provided at backside of the main door of Charger on Aluminium plate

8 QUALITY ASSURANCE, INSPECTION & TESTING

8.1	Vendor quality plan	To be submitted for purchaser approval
8.2	Inspection points	To be mutually identified & agreed in quality plan
8.3	Type test	Equipment should be of type tested quality only, type test certificate to be submitted along with offer. If the manufacturer's lab is accredited by govt. / authorized body then it shall be acceptable for type testing.
8.4	Routine test	As per relevant Indian standard
8.5	Acceptance test	To be performed in presence of Owner at manufacturer works a. Physical inspection & BOM, wiring check b. Insulation resistance test c. HV test for one minute d. Voltage regulation test e. Heat run test for 12 hours f. Measurement of efficiency, power factor & ripple content

9 DEVIATIONS

Deviation from this specification shall be stated in writing with the tender by reference to the specification clause/ GTP/ Drawing and description of alternative offer. In absence of such a statement, it shall be assumed by the buyer that the seller complies fully with this specification.

10 GTP

Vendor must submit clause wise compliance against specification at the time of drawing approval clearly highlighting the deviations from specification against each clause.

11 DRAWING AND DATA SUBMISSION MATRIX

S. No	Head	Bid	Drawing Approval	Pre Dispatch	Pre Closure
11.1	Contact Person Name, Email ID and Mobile Number	Required	Required		
11.2	Deviation Sheet (as per "Deviations" Clause)	Required			
11.3	GTP		Required		
11.4	Relevant Type Test as per IS/IEC/UL	Required	Required		
11.5	Manufacturer's quality assurance plan and certification for quality standards		Required		
11.6	Sizing Calculation of Associated Equipment		Required		
11.7	Recommended Spares for five years of operation)		Required		
11.8	**Battery Charger Drawing**				
11.8.1	General Arrangement	Required	Required		
11.8.2	Sectional Layout		Required		
11.8.3	Cabinet Layout		Required		
11.8.4	SLD	Required	Required		
11.8.5	Schematic Circuit diagram and Scheme of Each type of Panel		Required		
11.8.6	Communication Architecture		Required		
11.8.7	QAP		Required		
11.8.8	BOQ		Required		
11.8.9	Plan		Required		
11.8.10	Foundation Diagram		Required		
11.8.11	Make of all Component as per specification		Required		
11.8.12	Drawing of Substation Room		Required		
11.9	Installation, erection and commissioning manual		Required		

S. No	Head	Bid	Drawing Approval	Pre Dispatch	Pre Closure
11.10	Inspection Reports			Required	
11.11	As manufacturing Drawings			Required	
11.12	Operation and Maintenance Manual			Required	
11.13	Trouble shooting manual			Required	
11.14	As built Drawings				Required

12 PACKING

12.1	Packing Protection	Against corrosion, dampness, heavy rains, breakage and vibration. During transportation/ transit and storage, module may be subjected to outdoor conditions. Hence, packing of each panel shall be weatherproof.
12.2	Packing for accessories and spares	Robust wooden non returnable packing case with all the above protection & identification Label
12.3	Packing Identification Label to be provided on each packing case with the following details	
12.3.1	Individual serial number	
12.3.2	Purchaser's name	
12.3.3	PO number (along with SAP item code, if any) & date	
12.3.4	Equipment Tag no. (if any)	
12.3.5	Destination	
12.3.6	Project Details	
12.3.7	Manufacturer / Supplier's name	
12.3.8	Address of Manufacturer / Supplier / it's agent	
12.3.9	Description and Quantity	
12.3.10	Country of origin	
12.3.11	Month & year of Manufacturing	
12.3.12	Case measurements	
12.3.13	Gross and net weights in kilograms	
12.3.14	All necessary slinging and stacking instructions	
12.4	Packing Protection	Against corrosion, dampness, heavy rains, breakage and vibration. During transportation/ transit and storage, module may be subjected to outdoor conditions. Hence, packing of each panel shall be weatherproof.
12.5	Packing for accessories and spares	Robust wooden non returnable packing case with all the above protection & identification Label
12.6	Packing Identification Label to be provided on each packing case with the following details	

12.6.1	Individual serial number
12.6.2	Purchaser's name
12.6.3	PO number (along with SAP item code, if any) & date
12.6.4	Equipment Tag no. (if any)
12.6.5	Destination
12.6.6	Project Details
12.6.7	Manufacturer / Supplier's name
12.6.8	Address of Manufacturer / Supplier / it's agent
12.6.9	Description and Quantity
12.6.10	Country of origin
12.6.11	Month & year of Manufacturing
12.6.12	Case measurements
12.6.13	Gross and net weights in kilograms
12.6.14	All necessary slinging and stacking instructions

13 SHIPPING

13.1	Shipping	The bidder shall ascertain at an early date and definitely before the commencement of manufacture, any transport limitations such as weights, dimensions, road culverts, Overhead lines, free access etc. from the Manufacturing plant to the project site. Bidder shall furnish the confirmation that the proposed Packages can be safely transported, as normal or oversize packages, up to the site. Any modifications required in the infrastructure and cost thereof in this connection shall be brought to the notice of the Purchaser.
		The seller shall be responsible for all transit damage due to improper packing.

14 HANDLING AND STORAGE

14.1	Handling and Storage	Manufacturer instruction shall be followed. Detail handling & storage instruction sheet / manual needs to be furnished before commencement of supply.

BSES

Technical Specification

Of

Direct Current Distribution Board

Specification no – BSES-TS-71-DCDB-R0

Rev:		0
Pages:		1 of 16
Date:		02 May 2022
Prepared by	Abhishek Harsh	
	Amar Singh	
Reviewed by	Srinivas Gopu	
	Abhinav Srivastava	
Approved by	Gaurav Sharma	
	Gopal Nariya	

INDEX

1 SCOPE 3
2 STANDARDS AND CODES 3
3 SERVICE CONDITION 3
4 CONSTRUCTION 4
5 CONFIGURATION 5
6 BUSBARS 6
7 TERMINALS AND WIRING 6
8 METERS, INDICATIONS, PUSH BUTTONS & HEATERS 7
9 NAME PLATES & MARKINGS 7
10 FINISH 8
11 APPROVED MAKES OF COMPONENTS 8
12 INSPECTION AND TESTING 9
13 PACKING, SHIPPING, HANDLING AND SITE SUPPORT 9
14 DEVIATIONS 10
15 DOCUMENT SUBMISSION 10
16 GUARANTEED TECHNICAL PARTICULARS 11

1 SCOPE

This specification covers the design, engineering, manufacture, assembly and testing at Manufacturer's works and supply of 220 VDC/50 VDC Distribution board (DCDB) along with all hardware and accessories required for installation and operation.
Specification covers Type 1 and Type 2 DCDB. Type 1 DCDB is for Grid Substations while Type 2 DCDB is for BSES HT Customers.

2 STANDARDS AND CODES

2.1	IS:8623	Specification for factory built assemblies of switchgear & control gear for voltages up to and including 1000V AC/1200 V DC.
2.2	IS 60947-1	Specification for Low-voltage Switchgear and Controlgear - Part 2 :Circuit Breakers
2.3	IS:10118	Code of practice for selection, installation and maintenance switchgear and control gear
2.4	IS:2705	Current transformers
2.5	IS:3231	Electrical relays for power system protection
2.6	IS:1248	Electrical Indicating instruments
2.7	IS:4794	Switches and push buttons
2.8	IS:6005	Code of practice of phosphating iron and steel
2.9	IS:5082	Wrought Aluminium and aluminum alloys for electrical purposes
2.10	IS 3043	Code of practice for Earthing

3 SERVICE CONDITION

3.1	Location	Indoor
3.2	Average grade atmosphere	Heavily polluted, Dry
3.3	Maximum altitude above sea level	1000M
3.4	Ambient air temperature	Highest 50Deg C Average 40Deg C
3.5	Minimum ambient air temperature	0 Deg C
3.6	Relative Humidity	100%

3.7	Rainfall	750mm concentrated in four months
3.8	Seismic Zone	IV

4 CONSTRUCTION

4.1	General construction	It shall be free-standing type comprising dust-tight and vermin-proof sheet steel cabinets suitable for indoor installation with IP-54 degree of protection. Necessary busbar support insulators, cable glands, cable supports and terminal blocks etc. The board shall preferably be of single front type.
4.2	Material	The Board shall be made cold rolled steel sheet having Thickness of 2.5 mm of load bearing member and 2 mm for Doors and covers , suitably reinforced to provide flat level surfaces. No welds, rivets, hinges or bolts shall be visible from outside.
4.3	Equipment Mounting	All switches provided on the distribution board shall be on front side of the cabinets, operable from outside. All instruments and control devices shall be mounted on the front of cabinets and fully wired to the terminal blocks.
4.4	Busbar housing	The busbars shall be housed in totally enclosed busbar chambers. Incoming connections from the busbar to various feeders shall be designed so as not to disturb cable connections. Busbar arrangement should ensure safety of the operation/maintenance personnel and facilitate working on any outgoing module without the need for switching off in-feed to the adjacent modules, as far as possible
4.5	Cable alleys	A cable alley preferably 230 mm wide shall be provided in each vertical section for taking cables into the compartments. Cable alleys shall be provided on sides of busbar chamber.
4.6	Cable entry	Cable entry should be from bottom
4.7	Cable glands	Compression type cable glands shall be provided to hold the cables to avoid any pressure or tension on the terminal block connections.
4.8	Gland Plate	Gland plate shall be 3.0mm thick.
4.9	Doors	The doors of cabinets shall be lockable and shall be fitted with double lipped gaskets.
4.10	Gasket	All doors, removable covers and panels shall be gasketed all around with neoprene gaskets. Gaskets shall be embedded through machine only.
4.11	Ventilating louvers	Ventilating louvers shall have screens and filters. The screens shall be made of either brass or GI wires mesh.

4.12	Foundation	The panels shall be fixed on the embedded foundation channels with intervening layers anti vibration strips made of shock absorbing materials.
4.13	Base Frame	Base frames shall be supplied along with panels. 100mm channel painted black.
4.14	Mounting	Equipment on front of panel shall be flush mounted. No equipment shall be mounted on the doors.
4.15	Working level	The center lines of switches, push buttons and indicating lamps shall not be less than 750mm and higher than 1600mm from panel base.
4.16	Dimension	500(L)X500(D)X1800(H) mm^3

5 CONFIGURATION

5.1	Incomers	One incomers having Double Pole DC MCB with Aux Switch.
5.2	Outgoing feeders	All outgoing feeders shall have MCB. Number of outgoing feeders shall be as per table attached

Application	No of Poles	Type-1		Type-2	
		Rating of MCB (In Amp)	Quantity	Rating of MCB (In Amp)	Quantity
Incomer	2	100	1	50	1
Emergency Lighting DB	2	32	1	16	1
Fire Alarm System	2	32	1	16	0
SCADA	2	32	2	16	1
CRP/33 kV/66 kV Switchgear	2	32	4	16	1
11 kV Switchgear	2	32	4	16	0
Testing Purpose	2	32	1	16	1
NIFPS	2	32	4	16	0
Spare 1	2	100	1	50	1
Spare 2	2	32	4	16	2

6 BUSBARS

6.1	Material	Busbar shall be of tinned electrolytic copper or Aluminium
6.2	Size	Suitable for carrying the rated continuous current of 100 A and short circuit current of 15 kA. Busbars shall be continuous throughout the panel. Temperature rise should be limited to 40 degrees over ambient.
6.3	Supports	The busbar shall be supported by means of durable non-hygroscopic, non-combustible and non-tracking polyester fiberglass material or porcelain. Supports shall be capable of withstanding the maximum short circuit stresses.
6.4	Sleeves and shrouds	Busbars shall be encased in heat-shrinkable sleeves of insulating material which shall be suitable for the operating temperature of busbars during normal service. The busbar joints shall be provided with removable thermosetting plastic shrouds.

7 TERMINALS AND WIRING

7.1	Wiring	
7.1.1	Grade and type	1100 V grade, PVC insulated, FRLS type stranded flexible copper wire.
7.1.2	Ferruling	Each wire shall bear an identifying ferrule or tag at each end or connecting point.
7.1.3	Spare	20% Spare Wiring
7.2	Terminals	Terminals of appropriate size shall be provided inside each cabinet for incoming and outgoing cables.
7.2.1	Grade	1100 V grade, moulded piece terminals complete with insulated barriers, washers, nuts and lock nuts.
7.2.2	Power Terminals type	Stud type, nut driver operated
7.2.3	Control terminals type	Stud type, screw driver operated
7.2.4	Spare terminals	20% spare terminals should be provided in each terminal block.
7.2.5	Accessibility	Placement of terminals shall enable proper cable termination. Terminals shall be readily accessible for inspection and maintenance.
7.2.6	Marking	The terminals shall be serially numbered to facilitate installation and maintenance.

8 METERS, INDICATIONS, PUSH BUTTONS & HEATERS

8.1	Meters	
8.1.1	Ammeter	DC Moving coil ammeter of size 96 sq.mm. with external shunt. Rating of Ammeter shall be 0-100A DC.
8.1.2	Voltmeter	DC Moving coil voltmeter of size 96.sq.mm to read the DC Bus voltage. Rating of Voltmeter shall be 0-300VDC
8.1.3	Type	Digital type, connected through instruments transformers of suitable rating.
8.2	Indicating lamps	Indicating lamps shall be of low wattage cluster LED type.
8.2.1	Incomer/ Outgoing On	Red
8.2.2	Incomer/ Outgoing Off	Green
8.2.3	Incomer/ Outgoing Trip	Amber
8.3	Push buttons	For manual operation of incomer MCB
8.4	Heaters	Cubicle space heater having rating of 100W. Thermostat for space heater shall be provided with temperature range $0\text{-}90^0$
8.5	CFL	Cubicle lamp shall be provided in DCDB having rating of 11 W.

9 NAME PLATES & MARKINGS

9.1	Panel nameplate	Panel shall have a nameplate clearly indicating the following: a. Panel Serial No.- b. Customer Name - BSES Yamuna/Rajdhani Power Ltd c. PO No. & date - d. Type of Panel - e. Current rating - f. Guarantee period -
9.2	Feeder nameplate	Large and bold name plate carrying the feeder identification shall be provided on the top.
9.3	Equipment nameplate	a. All equipment mounted on front side as well as equipment mounted inside the panels shall be provided with individual name plates with equipment designation engraved. b. All front mounted equipment shall be also provided

		at the rear with individual name plates engraved with tag numbers corresponding to the one shown in the panel internal wiring to facilitate easy tracing of the wiring.
9.4	Material	Non-rusting metal or 3 ply lamicoid. Nameplates shall be black with white engraving lettering. Stickers are not allowed.
9.5	Fixing	All nameplates/rating plates shall be riveted to the panels at all four corners. Bolting/screwing is not acceptable.
9.6	Markings	Each switch shall bear clear inscription identifying its function. Similar inscription shall also be provided on each device whose function is not other wise identified. If any switch or device does not bear this inscription separate nameplate giving its function shall be provided for it. Switch shall also have clear inscription for each position indicating e.g. Trip-Neutral close, ON-OFF etc.

10 FINISH

10.1	Primer	Two coats
10.2	Paint	Two finishing coats of epoxy based paint of Shade RAL 7032 with glossy finish.
10.3	Paint thickness	50 microns (minimum)

11 APPROVED MAKES OF COMPONENTS

11.1	Switch	Siemens / L&T (Salzer)
11.2	HRC Fuse Links	GE/ Siemens/ L&T
11.3	Meters	Rishabh/Schneider/AE
11.4	Terminals	Connectwell/Elmex/Wago/Phoenix
11.5	Push buttons / Actuator	L&T/Siemens/Vaishno/Schneider
11.6	MCB	Datar/Legrand/Hager/Schneider/ABB
11.7	Indicating lamps	Vaishno/Binay/Teknic/Siemens/Mimic/C&S

12 INSPECTION AND TESTING

12.1	Type test	Equipment should be of type tested quality only, type test certificate to be submitted along with offer. If the manufacturer's lab is accredited by govt. / authorized body then it shall be acceptable for type testing.
12.2	Acceptance & Routine tests	As per relevant Indian standard

13 PACKING, SHIPPING, HANDLING AND SITE SUPPORT

13.1	Packing Protection	The packing shall be fit to withstand rough handling during transit and storage at destination. The test set should be properly protected against corrosion, dampness & damage.
13.2	Packing for accessories and spares	Robust non-returnable packing case with all the above protection & identification Label. The bidder should get the packing list approved before dispatching the material.
13.3	Packing Identification Label	On each packing case, following details are required:
13.3.1	Individual serial number	
13.3.2	Purchaser's name	
13.3.3	PO number (along with SAP item code, if any) & date	
13.3.4	Equipment Tag no. (if any)	
13.3.5	Destination	
13.3.6	Manufacturer / Supplier's name	
13.3.7	Address of Manufacturer / Supplier / it's agent	
13.3.8	Description	
13.3.9	Country of origin	
13.3.10	Month & year of Manufacturing	
13.3.11	Case measurements	

13.3.12	Gross and net weight	
13.3.13	All necessary slinging and stacking instructions	
13.4	Shipping	The seller shall be responsible for all transit damage due to improper packing.
13.5	Handling and Storage	Manufacturer instruction shall be followed.
13.6	Detail handling & storage instruction sheet / manual to be furnished before commencement of supply.	

14 DEVIATIONS

14.1	Deviation	Deviations from this Specification shall be stated in writing with the tender by reference to the Specification clause/GTP/Drawing and a description of the alternative offer. In absence of such a statement, it will be assumed that the bidder complies fully with this specification. No deviation will be acceptable post order.

15 DOCUMENT SUBMISSION

Drawing submission shall be as per the matrix given below. All documents/ drawing shall be provided on A3/A4 sheet in box file with separators for each section. Also provide USB containing pdf with bid for soft copy. Language of the documents shall be English only. Deficient/ improper document/ drawing submission may liable for rejection

S. No	Head	Bid	Drawing Approval	Pre Dispatch	Pre Closure
15.1	Contact Person Name, Email ID and Mobile Number	Required			
15.2	Deviation Sheet	Required	Required		
15.3	Type Test	Required			
15.4	Any Technological Advancement in DCDB	Required			
15.5	Manufacturer's quality assurance plan and certification for quality standards				
15.6	General Arrangement		Required		
15.7	Door Layout		Required		

15.8	Internal Layout		Required		
15.9	SLD		Required		
15.10	Schematic Circuit diagram		Required		
15.11	Bus Bar Arrangement		Required		
15.12	Cable Alley Arrangement		Required		
15.13	GTP	Required	Required		
15.14	QAP		Required		
15.15	BOQ		Required		
15.16	Foundation diagram		Required		
15.17	TB Detail		Required		
15.18	Name Plate Detail		Required		
15.19	Make of all Component as per specification		Required		
15.20	Inspection Report			Required	
15.21	As manufacturing Drawings			Required	
15.22	Operation and Maintenance Manual			Required	Required
15.23	Trouble shooting manual			Required	Required
15.24	As built Drawings				Required
15.25	Test Report				Required

16 GUARANTEED TECHNICAL PARTICULARS

Vendor must submit clause wise compliance in Excel sheet against specification at the time of drawing approval clearly highlighting the deviations from specification against each clause.

S. No.	Description	Specification requirement	Bidder's Data
16.1	**GENERAL FEATURES**		
16.1.1	Make		
16.1.2	Type		
16.1.3	Reference Standard		

16.1.4	Rated Operational voltage	220 VDC/50 VDC	
16.1.5	Rated Nominal Current	100	
16.1.6	Rated Insulation voltage	1100V	
16.1.7	Rated Impulse withstand voltage	8kV	
16.1.8	Service supply for heating, lighting and power sockets	240VAC±10%	
16.1.9	Mounting	Floor (Free standing)	
16.1.10	Connections	Cable entry – Bottom	
16.1.11	Configuration	Single front	
16.1.12	Enclosure thickness		
a	Load Bearing Member	>=2.5mm	
b	Doors and Covers	>=2 mm	
c	Gland Plate	3 mm	
16.1.13	Enclosure Material	CRCA Sheet	
16.1.14	Enclosure degree of protection	IP 54	
16.1.15	Power Cable Termination	Suitable for 4CX50 Sq.mm Al	
16.1.16	Paint shade	RAL 7032 (Siemens Grey)	
16.1.17	Typical vertical section (Overall dimension (mm) and weight (Kg))	Required	
16.1.18	Incomer		
16.1.19	Outgoings		
16.1.20	Dimensions of the DCDB Panel	500(L)X500(D)X1800(H) mm3	
16.1.21	Weights of the DCDB Panel	(in kg.)	
16.1.22	Marking on the panel	As per the specification	
16.1.23	Cable Alley Width	230 mm	
16.1.24	Cable Gland	Compression Type	

16.1.25	Gasket Material	Neoprene	
16.1.26	Ventilating louvers	Required	
16.1.27	Base Frame	100mm channel	
16.2	**MCB**		
16.2.1	Make	**Datar/Legrand/Hager/Schneider/ABB**	
16.2.2	Incomer	100A/50 A	
16.2.3	Emergency Lighting DB	32A/16 A	
16.2.4	Fire Alarm System	32A/16 A	
16.2.5	SCADA	32A/16 A	
16.2.6	CRP	32A/16 A	
16.2.7	11 kV Switchgear	32A/16 A	
16.2.8	Testing Purpose	32A/16 A	
16.2.9	NIFPS	32A/16 A	
16.2.10	Spare 1	100A/50 A	
16.2.11	Spare 2	32A/16 A	
16.3	**BUS AND BUS TAPS**		
16.3.1	Make		
16.3.2	Material	Tinned electrolytic copper or Aluminum	
16.3.3	Reference standard		
16.3.4	Continuous Current (at site condition, 50°C ambient) within cubicle		
16.3.5	Short Circuit withstand Current for 1 sec	15 KA	
16.3.6	Cross sectional Area		
16.3.7	DC resistance	ohm/m/ph	

16.3.8	Reactance	ohm/m/ph	
16.3.9	Losses-middle phase	w/m/ph	
16.3.10	Minimum clearance of bus bar and joints	Required	
16.3.11	Phase to phase (mm)		
16.3.12	Phase to earth (mm)		
16.3.13	Bus bar insulation	i. Heat shrinkable sleeves rated for maximum operating voltage	
		ii. Cast resin shrouds for joint	
16.3.14	Bus joints	Silver	
16.3.15	Bus bar support insulator	Required	
16.3.16	Spacing (mm)		
16.3.17	Make		
16.3.18	Type		
16.3.19	Reference standard		
16.3.20	Voltage class (kV)		
16.3.21	Minimum creepage distance (mm)		
16.3.22	Cantilever strength (Kg/sq.cm.)		
16.4	**Wiring and Terminals**		
16.4.1	**Wiring**		
a	Grade and type	1100 V grade, PVC insulated, FRLS type stranded flexible copper wire.	
b	Ferruling	Each wire shall bear an identifying ferrule or tag at each end or connecting point.	
c	Spare	20% Spare Wiring	
16.4.2	**Terminals**		
a	Grade	1100 V grade, moulded piece terminals complete with insulated barriers, washers, nuts and lock nuts.	
b	Power Terminals type	Stud type, nut driver operated	
c	Control terminals type	Stud type, screw driver operated	

d	Spare terminals	20% spare	
e	Accessibility	Placement of terminals shall enable proper cable termination. Terminals shall be readily accessible for inspection and maintenance.	
f	Marking	The terminals shall be serially numbered to facilitate installation and maintenance.	
16.5	**METERS, INDICATIONS, PUSH BUTTONS & HEATERS**		
16.5.1	Ammeter	DC Moving coil ammeter of size 96 sq.mm. with external shunt. Rating of Ammeter shall be 0-100A DC.	
a	Model No Ammeter		
b	Make of Ammeter		
16.5.2	Voltmeter	DC Moving coil voltmeter of size 96.sq.mm to read the DC Bus voltage. Rating of Voltmeter shall be 0-300VDC	
a	Model No Voltmeter		
b	Make of Voltmeter	Rishabh/Schneider/AE	
c	Type	Digital type	
16.5.3	Indicating lamps	Cluster LED type.	
a	Make of Indicating lamps	Vaishno/Binay/Teknic/Siemens/Mimic/C &S	
b	Incomer/ Outgoing On	Red	
c	Incomer/ Outgoing Off	Green	
d	Incomer/ Outgoing Trip	Amber	
e	Push buttons Make	L&T/Siemens/Vaishno/Schneider	
16.5.4	Heaters	Cubicle space heater having rating of 100W. Thermostat for space heater shall be provided with temperature range 0-90^0	
16.5.5	CFL	Cubicle lamp shall be provided in DCDB having rating of 11 W.	

16.6	**NAME PLATES & MARKINGS**		
a	Panel nameplate	Panel Serial No.-	
b		Customer Name - BSES Yamuna/Rajdhani Power Ltd	
c		PO No. & date -	
d		Type of Panel -	
e		Current rating -	
f		Guarantee period -	
16.6.1	Feeder nameplate	As per Spec	
a	Equipment nameplate	As per Spec	
b	Material	As per Spec	
c	Fixing	As per Spec	
d	Markings	As per Spec	
16.7	**FINISH**		
a	Primer	Two coats	
b	Paint	Two finishing coats of epoxy based paint of Shade RAL 7032 with glossy finish.	
c	Paint thickness	50 microns (minimum)	

CONTROLLED COPY

Reliance Energy
A Dhirubhai Ambani Enterprise

Specification for Ni Cd Battery

Specification no – SP-EDCX-01-R0

Prepared by:		Checked by		Approved by:		Revision	Date
Name	Sign	Name	Sign	Name	Sign		
MRK		SD		DG		R0	05th feb 05

Index

1.0 Scope of supply 3
2.0 Codes & standards 3
3.0 DC distribution system data 3
4.0 Battery bank design features 4
5.0 Quality assurance 5
6.0 Inspection & testing 5
7.0 Shipping, Handling and Site support 6
8.0 Deviations 6
9.0 Drawing submission 7
Annexure A Scope of supply 8
Annexure B Technical particulars (Data by purchaser) 9
Annexure C Guaranteed Technical Particulars (Data by Supplier) 10
Annexure D Recommended spares (Data by supplier) 12
Annexure E Typical DC load curve 13

1.0 Scope of supply

1.1) A DC battery set shall comprise of two battery bank units each connected to a float cum boost charger.

1.2) Each battery bank shall be sized for supplying 100% load for a back up time of 1 hour.

1.3) Two such battery banks in a SET shall supply the rated 100% load for 2 hours.

For scope of supply, refer annexure – A

2.0 Codes & standards

Materials, equipment and methods used in the manufacture of switchboards shall conform to the latest edition of following -

Indian Electricity Rules	
Indian electricity act	
CBIP manual	
IEC 60623	Ni Cd battery
IS 10918	Ni Cd battery
IS5	Color of mixed paints
IS 13703	Low-voltage Fuses for Voltages Not Exceeding 1000V AC
IS 5578	Guide for Marking of Insulated Conductors

In the event of direct conflict between various order documents, the precedence of authority of documents shall be as follows -

i. Guaranteed Technical Particulars (GTP)

ii. Specification including applicable codes, standards

iii. Approved Vendor Drawings

iv. Other documents

3.0 DC distribution system data

3.1	DC Supply	2 wire, with positive & negative polarity
3.2	Earth reference	Unearthed system
3.3	Voltage	220v / 110v / 50v
3.4	Application – Industrial	Standby DC back up for switchgear control supply & SCADA RTU

4.0 Battery bank design features

4.1	DC battery bank Ahr rating & sizing	As per Annexure B
4.2	DC load curve	As per Annexure E
4.3	Location of battery bank	Indoor
4.4	Mounting of battery bank	On steel rack, painted with anti corrosive paint
4.5	Arrangement	Battery cells connected in series with multi step two tier formation without tap cell arrangement
4.6.1	Battery Type	Storage type rechargeable wet cell
4.6.2	DC battery electrode type	Fiber plate / pocket plate
4.7	Battery cell	vented cell closed type
4.8	Venting device	Anti-splash
4.9	Battery cell container	Translucent, prismatic, non flammable, poly propylene
4.10	Battery cell lifting arrangement	Suitable arrangement on cell
4.11	Electrolyte sampling & servicing	Alkali resistant material cap on cell top
4.12	Battery cell designation	To be marked on cell as per relevant standard
4.13	Battery cell marking	Manufacturer name & type, month & year of manufacture, nominal voltage, rated Ahr capacity & Cell Number
4.14	Battery electrolyte level - minimum & maximum	To be marked on cell container
4.15	Battery cell electrolyte	KOH solution in distilled water
4.16	Electrolyte specific gravity	To be specified by supplier at 27 deg C
4.17	Nominal cell voltage	1.2volt for Nicd
4.18	Battery terminals	Stud type
4.19	Terminal polarity marking	Positive & negative marked on cell
4.20	Battery cell shorting metal links	Nickel plated copper with protective insulating sleeve
4.21	Insulating shrouds	For all battery cell terminals & shorting links
4.22	Insulating pads for battery rack	At the bottom of rack supports, made from high impact material
4.23	Battery suitable for Ripple content	5% minimum in DC charger output

4.24	Power terminal with insulator	Bus bar type mounted on rack suitable for 70sqmm cable
4.25	Cooling	Natural ventilation
4.26.1	Tools & accessories to be supplied with each battery set	Set of insulated spanners
4.26.2		Set of thermometers
4.26.3		rubber hand gloves / eye protection goggle & specific gravity test kit
4.26.4		Portable DC volt meter
4.26.5		Funnel with filter
4.26.6		Mug for filling electrolyte
4.26.7		Wall mounted box to keep all accessories

5.0 Quality assurance

5..1	Vendor quality plan	To be submitted for purchaser approval
5.2	Inspection points	To be mutually identified & agreed in quality plan

6.0 Inspection & testing

6.1	Type test	Equipment shall be of type tested quality as per IEC for fiber plate battery & as per IS for pocket plate battery
		If the manufacturer's lab is accredited by govt. /authorized body then it shall be acceptable for type testing
6.2	Routine test	As per relevant standard
6.3	Acceptance test	To be performed in presence of purchaser at manufacturer works
		- Physical inspection & BOM, wiring check
		- Insulation resistance test
		- HV test for one minute
		- Charge discharge test
		- Measurement of efficiency & temperature rise for above

7.0 Shipping, Handling and Site support

7.1	Packing Protection	Against corrosion, dampness, heavy rains, breakage and vibration
7.2	Packing for accessories and spares	Robust wooden non returnable packing case with all the above protection & identification Label
7.3	Packing Identification Label	In each packing case, following details are required :
		i : Individual serial number
		ii : Purchaser's name
		iii : PO number (along with SAP item code, if any) & date
		iv : Equipment Tag no. (if any)
		v : Destination
		vi : Manufacturer / Supplier's name
		vii : Address of Manufacturer / Supplier
		viii : Description and Quantity
		ix: Country of origin
		'x : Month & year of Manufacturing
		xi : Case measurements
		xii : Gross and net weights in kilograms
		xiii : All necessary slinging and stacking instructions
7.4	Shipping	The seller shall be responsible for all transit damage due to improper packing.
7.5	Handling and Storage	Manufacturer instruction shall be followed. Detail handling & storage instruction sheet / manual needs to be furnished before commencement of supply.

8.0 Deviations

8.1	Deviations from this Specification shall be stated in writing with the tender by reference to the Specification clause/GTP/Drawing and a description of the alternative offer. In absence of such a statement, it will be assumed by the Buyer that the Seller complies fully with this specification. Bidder to submit copy of Specification / GTP with company seal & signature on each page

.

9.0 Drawing submission

9.1	To be submitted along with bid	The seller has to submit :
		i) GA drawing of battery & battery rack
		ii) Detailed reference list of customers
		iii) Completely filled GTP
		iv) Battery sizing calculation
		v) Manufacturer's quality assurance plan and certification for quality systems
		vi) Type test reports. They shall be considered valid for 5 years from date of test performed on product /equipment.
		vii) Complete product catalogue and Manual along with the bid.
		viii) Recommended spare parts and consumable items for five years of operation with prices and spare parts catalogue with price list for future requirements
9.2	After award of contract, seller has to submit mentioned drawings for buyer's	i) Program for production and testing (A)
	Approval (A) / Reference (R)	ii) Guaranteed Technical Particulars (A)
		iii) Battery sizing Calculations
		iv-a) GA drawing
		iv-b) Schematic and wiring drawings
		v) Bill of material
		vi) Installation & commissioning Manual (R)
9.3	Submittals required prior to dispatch	i) Inspection and test reports (R) ii) Test certificates of all bought out items iii) Operation and maintenance Instruction as well as trouble shooting charts/ manuals
9.4	Drawing and document sizes	Standard size paper A4
9.5	No of drgs. / Documents required at different stages	As per Annexure- A

Annexure A Scope of supply

1.0 The scope of supply shall include following

1.1 Design, manufacture, testing at manufacturer works before dispatch, packing, delivery and submission of all documentation of the DC Battery set

1.2 Supervision of testing & commissioning of panel at site

1.3 BOQ as following -

Sr No	Purchaser Equipment Tag No / SAP code	Location / Substation name	Unit	Quantity (Battery set)
1		e.g. Santacruz	No	e.g. 1
2		e.g. Alaknanda	No	
3				
4				

2.0 Submission of documents - quantity

	Along with offer	For Approval after award of contract	Final after approval
Drawings & GTP	3 copies + 1 soft copy in CD	4 copies + 1 soft copy in CD	6 copies + 1 soft copy in CD
Calculations	3 copies + 1 soft copy in CD	4 copies + 1 soft copy in CD	
Catalogues	1 copy + 1 soft copy in CD		
Instruction manual for the transformer	1 copy + 1 soft copy in CD		
Test Report	2 copies + 1 soft copy in CD		

3.0 Delivery schedule

3.1 Delivery period start date - from date of purchase order

3.2 Delivery period end date - as per mutual agreement

3.3 Material dispatch clearance - after inspection by purchaser

Annexure B Technical particulars (Data by purchaser)

SrNo	Description	Data by purchaser
1	Location of equipment	*e.g. Mumbai / Delhi / Orissa / kerala / Dahanu etc*
2	Relative humidity	*e.g. 95% for Mumbai*
3	DC charger type available	2x100% Float cum boost charger
4	Battery room ventilation	Natural air indoor
5	DC battery set configuration	Two separate battery banks connected to 2x100% Float cum boost charger
6	Each DC battery bank rating at 27 deg C as per IS (or at 20 deg C as per IEC)	For supplying 100% DC load requirement for 1 hour back up time
7	DC battery bank voltage (i.e. DC load voltage)	
8	DC battery Load (refer annexure E)	
8.1	Load current 'I1' in amp	
8.2	Load current 'I2' in amp	
8.3	Load current 'I3' in amp	
10	Battery floor space available in meter (for 2x50% battery units)	*length x width*

Note – letters in *'italic blue'* indicate data to be filled by purchaser

Annexure C Guaranteed Technical Particulars (Data by Supplier)

Sr. No.	Description	Data to be filled by Manufacturer
1	Battery (as per scope of supply annexure A) – Yes/No	
2	Manufacturer battery type	
3	Conformance to design standards as per specification clause no 2.0 – Yes/No	
4	Conformance to design features as per specification clause no 3.0 & 4.0 – Yes/No	
5	Submission of deviation sheet for each specification clause no – Yes/No	
6.1	Battery GA drawing submitted – Yes/No	
6.2	Battery selection / sizing calculation submitted – Yes/No	
7	Battery rating (C5) offered in Ahr	
7.1	Rating at temperature 27 deg C as per IS	
7.2	Rating at temperature 20 deg C as per IEC	
8.1	Battery rack type offered - steel or FRP	
8.2	Number of steps in a tier	
8.3	Number of tier in rack	
9	Battery bank dimensions in mm (length x depth x height)	
10	Battery cell weight in kg	
11	Battery cell anode - no. of plates & thickness in mm	
12	Battery cell cathode - no of plates & thickness in mm	
13.1	Battery cell nominal voltage	
13.2	Battery cell float charge voltage	
14	Battery cell maximum boost charge voltage	
15	Battery cell end cell voltage	

16	Total battery bank float charging voltage required in volts	
17.1	Total battery bank boost charging voltage required in volts	
17.2	Total time required for boost charging from end cell voltage to rated voltage / capacity	
18	Battery internal resistance (in Ohms) at fully charged condition	
19	Heat generated by battery at rated full load (in Kw)	
20	Electrolyte chemical name	
21	Electrolyte specific gravity at 27 deg C	
22	Recommended topping up frequency (in weeks or months)	
23	Amount of gas evolution in one full charge discharge cycle (in litre / Ahr)	
24	Type of separators used in battery cell	
25	Shelf life period (to retain 90% of energy from full charge condition at 27 deg C)	
26	Total battery bank short circuit fault level (in KA)	
27	Battery bank terminal bus bar with insulating shrouds – Yes/no	

Annexure D Recommended spares (Data by supplier)

List of recommended spares as following –

Sr No	Description of spare part	Unit	Quantity
1		No	
2		No	
3			
4			
5			
6			

Annexure E Typical DC load curve

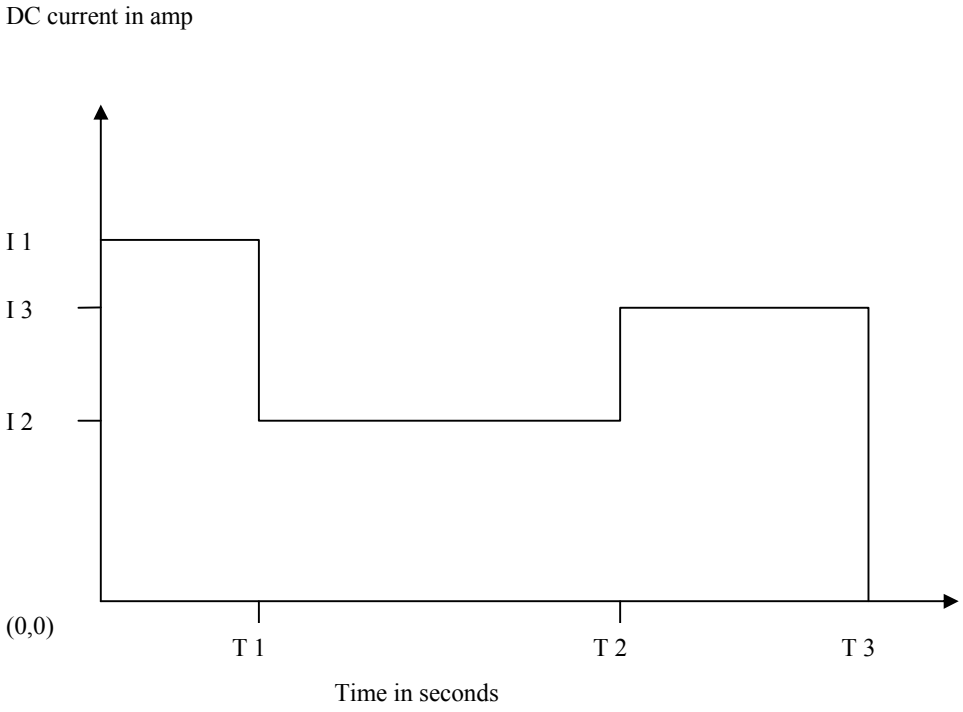

DC Load to be supplied after loss of mains AC supply to float cum boost charger

A. Time T1 = 15 seconds (Tripping of breakers + relay + emergency light + SCADA)

B. Time T2 = 60 minutes (Relay + emergency light + SCADA)

C. Time T3 = 15 seconds (closing of breaker+ SCADA + relay + emergency light)

Note -

1) A DC battery set shall comprise of two battery bank units.

2) Each battery bank shall be sized for supplying 100% load for a back up time of 1 hour.

3) Two such battery banks in a SET shall supply the rated 100% load for 2 hours.

BSES

Technical Specification

For

415 V AC Distribution Board

Specification no – BSES-TS-70-ACDB-R0

Rev		0
Page		1 of 17
Date		05 May 2022
Prepared by	Jeena Borana	
	Abhishek Harsh	
	Amar Singh	
Reviewed by	Srinivas Gopu	
	Abhinav Srivastava	
Approved by	Gaurav Sharma	
	Gopal Nariya	

INDEX

1 SCOPE 3
2 STANDARDS & CODES 3
3 SERVICE CONDITIONS 3
4 ACB CONFIGURATION 4
5 CONSTRUCTION 5
6 BUSBAR 7
7 MCCB 7
8 CURRENT TRANSFORMER 8
9 TERMINALS AND WIRING 8
10 METERS, INDICATIONS AND PUSH BUTTONS 9
11 NAME PLATES & MARKINGS 9
12 FINISHING 10
13 APPROVED MAKE OF COMPONENTS 10
14 QUALITY ASSURANCE PLAN, INSPECTION AND TESTING 11
15 PACKING, SHIPPING, HANDLING & SITE SUPPORT 11
16 DEVIATIONS 12
17 DOCUMENT SUBMISSION MATRIX 12
ANNEXURE A GUARANTEED TECHNICAL PARTICULARS 14

1 SCOPE

This specification covers the design, engineering, manufacture, assembly and testing at manufacturer's works and supply of 415V AC Distribution board (ACDB)along with all hardware and accessories required for installation and operation.
Specification covers Type 1 and Type 2 ACDB. Type 1 ACDB is for Grid Substations while Type 2 ACDB is for BSES HT Customers.

2 STANDARDS & CODES

2.1	IS:8623	Specification for factory built assemblies of switchgear & control gear for voltages up to and including 1000V AC/1200 V DC.
2.2	IS 60947-1	Specification for Low-voltage Switchgear and Control gear - Part 2 : Circuit Breakers
2.3	IS:10118	Code of practice for selection, installation and maintenance switchgear and controlgear
2.4	IS:2705	Current Transformers
2.5	IS:3231	Electrical relays for power system protection
2.6	IS:1248	Electrical Indicating instruments
2.7	IS:4794	Switches and push buttons
2.8	IS:6005	Code of practice of phosphating iron and steel
2.9	IS:5082	Wrought Aluminum and aluminum alloys for electrical purposes
2.10	IS 3043	Code of practice for Earthing

3 SERVICE CONDITIONS

3.1	System Configuration	3 Phase 4 Wire with neutral solidly grounded
3.2	Supply Voltage	415 volt +/- 10%
3.3	Supply frequency	50Hz
3.4	Location	Indoor
3.5	Average grade atmosphere	Heavily polluted, Dry
3.6	Maximum altitude above sea level	1000M
3.7	Ambient air temperature	Highest 50Deg C Average 40Deg C
3.8	Minimum ambient air temperature	0 Deg C
3.9	Relative Humidity	100%
3.10	Rainfall	750mm concentrated in four months

4 ACB CONFIGURATION

4.1 TYPE 1 ACDB CONFIGURATION

4.1.1	Incomers	a. Two incomers, each having Motorized 630A MCCB. MCCBs shall have microprocessor based over current and earth fault release. b. Auto changeover shall be provided between the two incomers c. Manual castle keyinterlock required between two incomers d. Castle key for Local /Remote operation			
4.1.2	Outgoing feeders	a. The number of outgoing feeders from AC boards shall be such that each substation equipment is fed by separate feeder (refer below). b. Utilization category of MCBs shall be C.			
	Application	**Type of Switchgear**	**No of Poles**	**Rating (A)**	**Quantity**
4.1.3	Transformer Oil filtration	MCB	4	200	2
4.1.4	Welding(Outdoor)	MCB	2	63	4
4.1.5	Power Socket(Indoor)	MCB	4	32	5
4.1.6	Outdoor Lighting	MCB	4	32	2
4.1.7	Indoor Lighting	MCB	4	32	2
4.1.8	Battery Charger	MCB	4	63	2
4.1.9	BMK	MCB	4	32	8
4.1.10	Marshalling Box(PTR)	MCB	4	32	3
4.1.11	AC Supply	MCB	4	32	2
4.1.12	UPS	MCB	2	16	1
4.1.13	11kV Switchgear	MCB	2	32	3
4.1.14	CRP	MCB	2	32	2
4.1.15	RTU/SCADA	MCB	2	16	2
4.1.16	Fire Fighting	MCB	2	16	2
4.1.17	EPAX	MCB	2	16	1

4.1.18	Power Socket (Outdoor)	MCB	2	16	4

4.2 TYPE 2 ACDB CONFIGURATION

4.2.1	Incomers	a. Two incomers, each having Motorized 400 A MCCB. b. Auto changeover shall be provided between the two incomers c. Manual castle key interlock required between two incomers d. Castle key for Local /Remote operation			
4.2.2	Outgoing feeders	a. The number of outgoing feeders from AC boards shall be such that each substation equipment is fed by separate feeder (refer below). b. Utilization category of MCBs shall be C.			
	Application	**Type of Switchgear**	**No of Poles**	**Rating (A)**	**Quantity**
4.2.3	Welding	MCB	2	63	1
4.2.4	Power Socket	MCB	4	32	3
4.2.5	Outdoor Lighting	MCB	4	16	2
4.2.6	Indoor Lighting	MCB	4	16	2
4.2.7	Battery Charger	MCB	4	32	2
4.2.8	AC Supply	MCB	4	32	2
4.2.9	Switchgear	MCB	2	32	2
4.2.10	RTU/SCADA	MCB	2	16	2
4.2.11	Fire Fighting	MCB	2	16	2

5 CONSTRUCTION

5.1	General construction	a. Board shall be of modular construction with provision for compartmentalization for Incomer and non-compartmentalization for outgoing feeders. b. It shall be free-standing type comprising dust-tight and vermin-proof sheet steel cabinets suitable for indoor installation with IP-54 degree of protection. c. Necessary busbar support insulators, cable glands, cable supports and terminal blocks etc. The board shall be of single front type.

5.2	Material	The Board shall be made out of at least 2.5 mm thickcoldrolled steel sheet (CRCA), suitably reinforced to provide flat level surfaces. No welds, rivets, hinges or bolts shall be visible from outside.
5.3	Equipment Mounting	a) All switches provided on the distribution board shall be on front side of the cabinets, operable from outside. b) All MCBs shall be flush mounted operable from front side of ACDB. c) All instruments and control devices shall be mounted on the front of cabinets and fully wired to the terminal blocks.
5.4	Operating Height	$\leq$ 1.6 meter
5.5	Busbar housing	a) The busbars shall be housed in totally enclosed busbar chambers. b) Incoming connections from the busbar to various feeders shall be designed so as not to disturb cable connections. c) Busbar arrangement should ensure safety of the operation/maintenance personnel and facilitate working on any outgoing module without the need for switching off in-feed to the adjacent modules, as far as possible
5.6	Outgoing Cable Termination	For Outgoing cable termination, vertical arrangement of Terminal Blocks shall be provided with ratings in descending order.
5.7	Cable glands	Compression type cable glands shall be provided to hold the cables to avoid any pressure or tension on the terminal block connections.
5.8	Gland Plate	Gland plate shall be 3.0mm thickwith metallic knockout punches
5.9	Doors	a) The doors of cable cabinets shall be lockablehinged type b) Doors shall be fitted with double lipped gaskets. c) Bus bar side shall have bolted doors.
5.10	Drawing Pocket	Shall be Provided to keep “As Built Drawings”

6 BUSBAR

6.1	Material	Busbar shall be of aluminum.
6.2	Size (phase and neutral)	a) Main busbar - 80x10 sqmm for Type 1 ACDB b) Main busbar – 50X10 sqmm for Type 2 ACDB c) Busbar dropper size Incomers - MCCB-80x10 sqmm for Type 1 ACDB d) Busbar dropper size Incomers - MCCB-50x10 sqmm for Type 2 ACDB
6.3	Supports	The busbar shall be supported by means of durable non-hygroscopic, non-combustible and non-tracking polyester fiberglass material or porcelain. Supports shall be capable of withstanding the maximum short circuit stresses
6.4	Sleeves and shrouds	Busbars shall be encased in heat-shrinkable sleeves of insulating material which shall be suitable for the operating temperature of busbars during normal service. The busbar joints shall be provided with removable thermosetting plastic shrouds.

7 MCCB

7.1	MCCB type	4 pole
7.2	MCCB design ambient temperature	50deg C
7.3	MCCB Housing	Thermoplastic material resistant to fire & abnormal heat , non hygroscopic
7.4	MCCB Terminal	Silver coated copper with phase barriers, spreader terminals & shrouds
7.5	De-rating at 50Deg ambient temperature	No derarting (0%)
7.6	MCCB rated 3 phase short circuit breaking capacity Ics = Icu	36kA minimum at 415v and 50Hz
7.7	MCCB rated 3 phase short circuit withstand capacity, Icw	8kA for 1sec
7.8	MCCB SC making current capacity	75kA peak
7.9	MCCB rated insulation level	1000V
7.10	MCCB mechanical & electrical endurance	As per IS 13947 / IEC
7.11	MCCB utilization category	B as per IS / IEC 947
7.12	MCCB indications	ON, OFF & TRIP
7.13	MCCB protection	MCCBs shall have microprocessor based over current and earth fault release.

7.14	Tripping characteristic required	
7.14.1	Overload setting	Range 60-100%In (Set on 95%)
7.14.2	Short Circuit setting	Range 200-1200%In (Set on 300%)
7.14.3	Earth fault setting	To be provided
7.15	MCCB Clearances in air	As per table XIII of IS 13947-1
7.16	MCCB temperature rise limits	As per table 2 & 3 of IS 13947-1
7.17	MCCB Ingress Protection	IP2X Minimum (pollution degree minimum 2)
7.18	MCCB additional features	Sealing/padlocking of operating knob in OFF position Sealing/padlocking of operating knob in OFF position isolation suitable with positive contact

8 CURRENT TRANSFORMER

8.1	Type	Cast-resin type, Class-E insulation, rated for 120% current continuous
8.2	Provision	Shall be provided in incomer for metering. Separate Neutral CT shall be connected in the neutral for detecting earth fault for both the incomer.
8.3	Secondary current	5A
8.4	Metering CT Class	1.0
8.5	Burden	Based on requirement

9 TERMINALS AND WIRING

9.1	Secondary Wiring	
9.1.1	Grade and type	1100 V grade, PVC insulated, FRLS type stranded flexible copper wire.
9.1.2	Ferruling	Each wire shall bear an identifying ferrule or tag at each end or connecting point.
9.1.3	Size	Appropriate size copper based on rated current and application subject to a minimum of 2.5sqmm copper
9.2	Terminals	Terminals of appropriate size shall be provided inside each cabinet for incoming and outgoing cables.
9.2.1	Grade	1100 V grade, molded piece terminals complete with insulated barriers, washers, nuts and lock nuts.
9.2.2	Power Terminals type	Stud type, nut driver operated

9.2.3	Control terminals type	Stud type, screw driver operated suitable for minimum 6sqmm wire.
9.2.4	Spare terminals	20% spare terminals should be provided in each terminal block.
9.2.5	Accessibility	Placement of terminals shall enable proper cable termination. Terminals shall be readily accessible for inspection and maintenance.
9.2.6	Marking	The terminals shall be serially numbered to facilitate installation and maintenance.
9.3	Cable troughs	Shall be provided for wiring of each terminal block with 50% spare capacity

10 METERS, INDICATIONS AND PUSH BUTTONS

10.1	Meters	
10.1.1	Multifunction Meter	For incomer feeders. Meter should have facility to store peak load current in memory.
10.1.2	Type	Digital with inbuilt phase selector
10.1.3	Communication Protocol	RS485 on MODBUS
10.1.4	Accuracy Class	1.0
10.1.5	Auxiliary supply	240VAC with 10% tolerance
10.2	Indicating lamps	Indicating lamps shall be of low wattage cluster LED type.
10.2.1	Incomer/ Outgoing On	Red
10.2.2	Incomer/ Outgoing Off	Green
10.2.3	Incomer/ Outgoing Trip	Amber
10.3	Push buttons	For manual operation of incomer

11 NAME PLATES & MARKINGS

11.1	Panel nameplate	Panel shall have a nameplate clearly indicating the following: a) Manufacturer's Name & Country: b) Panel Serial No.: c) Customer Name: BSES Yamuna / Rajdhani Power Ltd d) PO No. & date: e) Type of Panel: f) Current rating: g) Rated Voltage and Frequency: h) Month and year or Manufacture: MM/YYYY i) Guarantee period:
11.2	Feeder nameplate	Large and bold name plate carrying the feeder identification

		shall be provided on the top of each module. Blank insert type name plates shall be provided on each outgoing feeder.
11.3	Equipment nameplate	a) All equipment mounted on front side as well as equipment mounted inside the panels shall be provided with individual name plates with equipment designation engraved. b) All front mounted equipment shall also be provided at the rear with individual name plates engraved with tag numbers corresponding to the one shown in the panel internal wiring to facilitate easy tracing of the wiring.
11.4	Danger plate	Panel shall have a danger plate of anodized aluminum clearly indicating the danger logo and voltage details.
11.5	Material	Non-rusting metal or 3 ply lamicoid. Nameplates shall be black with white engraving lettering. Stickers are not allowed.
11.6	Fixing	All nameplates/rating plates shall be riveted to the panels at all four corners. Bolting/screwing is not acceptable.
11.7	Markings	Each switch shall bear clear inscription identifying its function. Similar inscription shall also be provided on each device whose function is not otherwise identified. If any switch or device does not bear this inscription separate nameplate giving its function shall be provided for it. Switch shall also have clear inscription for each position indicating e.g. Trip-Neutral close, ON-OFF etc.

12 FINISHING

12.1	Primer	Two coats
12.2	Finish	Powder Coating
12.3	Colour shade	RAL 7032 (Siemens Grey)
12.4	Paint thickness	70 microns (minimum)

13 APPROVED MAKE OF COMPONENTS

13.1	Switch	Siemens / L&T (Salzer)
13.2	HRC Fuse Links	GE/ Siemens/ L&T
13.3	Meters	Rishabh/Schneider/AE
13.4	AC Contractors	L&T/Siemens/Telemechanique/GE/ABB
13.5	Terminals	Connectwell/Elmex/Wago/Phoenix
13.6	Push buttons / Actuator	L&T/Siemens/Vaishno/Schneider
13.7	MCCB	L&T/Siemens/ ABB/GE/Schneider
13.8	MCB	Datar/Legrand/Hager/Schneider/ABB
13.9	Indicating lamps	Vaishno/Binay/Teknic/Siemens/Mimic/C&S

14 QUALITY ASSURANCE PLAN, INSPECTION AND TESTING

S No.	Parameters	Technical Requirements
14.1	Quality Assurance Plan	QAP Shall be submitted by vendor for approval. Inspection and testing of the material shall be carried out accordingly.
14.2	Type test	Equipment should be of type tested quality only, type test certificate to be submitted along with offer. Test reports from CPRI/ERDA accredited laboratory only acceptable.
14.3	Routine /Acceptance test	As per relevant Indian standard
14.4	Inspection	a) The buyer reserves the right to inspect equipment at the Seller's works at any time prior dispatch, to verify compliance with the specifications. b) In-process and final inspection call intimation shall be given in 15 days advance to purchaser. c) In the event of any discrepancy in the test reports i.e. test reports not acceptable or any type tests (including special /additional tests, if any) not carried out, same shall be carried out without any cost implication to BSES before dispatch of equipment.
14.5	Test certificates	Test certificates (routine and acceptance) shall be submitted along with the dispatch documents.

15 PACKING, SHIPPING, HANDLING & SITE SUPPORT

15.1	Packing Protection	The packing shall be fit to withstand rough handling during transit and storage at destination. The test set should be properly protected against corrosion, dampness & damage.
15.2	Packing for accessories and spares	Robust non-returnable packing case with all the above protection & identification Label. The bidder should get the packing list approved before dispatching the material.
15.3	Packing Identification Label	On each packing case, following details are required: a) Individual serial number b) Purchaser's name c) PO number (along with SAP item code, if any) & date d) Equipment Tag no. (if any) e) Destination f) Manufacturer / Supplier's name g) Address of Manufacturer / Supplier / it's agent h) Description i) Country of origin j) Month & year of Manufacturing

		k) Case measurements l) Gross and net weight m) All necessary slinging and stacking instructions
15.4	Shipping	The seller shall be responsible for all transit damage due to improper packing.
15.5	Handling and Storage	Manufacturer instruction shall be followed.
15.6	Detail handling & storage instruction sheet / manual to be furnished before commencement of supply.	

16 DEVIATIONS

16.1	Deviation	Deviations from this Specification shall be stated in writing with the tender by reference to the Specification clause/GTP/Drawing and a description of the alternative offer. In absence of such a statement, it will be assumed that the bidder complies fully with this specification. No deviation will be acceptable post order.

17 DOCUMENT SUBMISSION MATRIX

Drawing submission shall be as per the matrix given below.

- All documents/ drawing shall be provided in soft copy only through mail.
- Language of the documents shall be English only.
- Incomplete submission shall be liable for rejection.
- Document check sheet compliance shall be the first sheet for each submission stage i.e.Technical bid, Drawing Approval, Pre Dispatch
- No submission is acceptable without check list compliance.
- Order of documents shall be strictly as per the check list.
- Any drawing not included in the below table but necessary for detailed engineering shall be deemed to be included in bidder's scope.

S No.	Documents to be submitted	Bid	Approval	Pre Dispatch
17.1	Guaranteed Technical Particulars (GTP)	Required	Required	
17.2	Deviation Sheet, if any	Required	Required	
17.3	GA drawing, SLD, Wiring Diagram	Required	Required	

S No.	Documents to be submitted	Bid	Approval	Pre Dispatch
17.4	Type test reports(not more than 5 years old) from CPRI/ERDA	Required	Required	
17.5	Reference List of major customers using the offered product from last 5 years	Required		
17.6	Performance certificates executed in last 5 years			
17.7	Make of Raw Materials	Required	Required	
17.8	Manufacturer's Quality Assurance Plan		Required	
17.9	Complete product catalogue and Manual		Required	Required
17.10	Test certificates of all raw materials			Required
17.11	Inspection and routine test reports, carried out in manufacturer's works			Required

ANNEXURE AGUARANTEED TECHNICAL PARTICULARS

S. No.	Description	Specification requirement	Vendor Data
1.0	**GENERAL FEATURES**		
1.1	Make		
1.2	Type		
1.3	Reference Standard		
1.4	Rated Operational voltage	415V AC ± 10%	
1.5	Rated Nominal Current	630A	
1.6	Rated frequency	50 Hz (+3%, -5%)	
1.7	Rated Insulation voltage	1100V	
1.8	Rated Impulse withstand voltage	8kV	
1.9	Service supply for heating, lighting and power sockets	240VAC±10%,	
1.10	Mounting	Floor (Free standing)	
1.11	Connections	Cable entry – Bottom	
1.12	Configuration	Single front	
1.13	Enclosure thickness		
1.13.1	Load Bearing Member	>=2.5mm	
1.13.2	Doors and Covers	>=2 mm	
1.14	Enclosure Material	CRCA Sheet/GI	
1.15	Enclosure degree of protection	IP 54	
1.16	Mechanical safety interlocks	As specified in technical specification	
1.17	Incomer Power Cable Termination	2Rx4Cx300sqmm	
	Outgoing Cable Termination	a) 200A MCB- 4Cx150sqmm b) 63A MCB- 4Cx50sqmm c) 32A MCB- 4Cx25 sqmm d) 16A MCB- 2Cx10 sqmm	
	Cable Termination Type	From Bottom of Panel	
	Clearance	150 mm clearance to be maintained from the bottom of the TB and the gland plate	
1.18	Paint shade	RAL 7032 (Siemens Grey)	
1.19	Typical vertical section (Overall dimension (mm) and weight (Kg))	Required	
1.19.1	Incomer		
1.19.2	Outgoings		
1.20	Dimensions of the ACDB Panel	L (mm) X D (mm) X H (mm)	

S. No.	Description	Specification requirement	Vendor Data
1.21	Weights of the ACDB Panel	(in kg.)	
1.22	Marking on the panel	As per the specification	
2.0	**INCOMER MCCB**		
2.1	Make & Model of MCCB	Required	
2.2	Catalogue of MCCB	Required	
2.3	Continuous Current at 40 deg C/ 50 deg C	630A	
2.4	Rated ultimate breaking capacity at rated voltage	50kA	
2.5	Rated service breaking capacity Ics	Ics = 100% Icu at rated voltage	
2.6	Rated making current	Icm = 220% Icu	
2.7	Utilization Category	A	
2.8	Overload setting	50 -100% (Inverse time characteristics)	
2.9	Overcurrent setting	200-1000% (Instantaneous characteristics)	
2.10	Earthfault setting	20-100% (Instantaneous)	
2.11	Dimension(HxWxD)	Required	
2.12	Weight	Required	
3.0	**BUS AND BUS TAPS**		
3.1	Make		
3.2	Material and grade of buses and joints	High conductivity electrolytic grade aluminum	
3.3	Reference standard		
3.4	Continuous Current (at site condition, 50°C ambient) within cubicle	630A	
3.5	Cross sectional Area		
3.6	DC resistance	ohm/m/ph	
3.7	Skin-effect ratio		
3.8	Reactance	ohm/m/ph	
3.9	Losses-middle phase	w/m/ph	
3.10	Minimum clearance of bus bar and joints	Required	
3.10.1	Phase to phase (mm)		
3.10.2	Phase to earth (mm)		
3.11	Bus bar insulation	a. Heat shrinkable sleeves rated for maximum operating voltage b. Cast resin shrouds for joint	

S. No.	Description	Specification requirement	Vendor Data
3.12	Bus joints	Silver	
3.13	Bus bar support insulator	Required	
3.13.1	Spacing (mm)		
3.13.2	Make		
3.13.3	Type		
3.13.4	Reference standard		
3.13.5	Voltage class (kV)		
3.13.6	Minimum creepage distance (mm)		
3.13.7	Cantilever strength (Kg/sq.cm.)		
4.0	**CURRENT TRANSFORMER**		
4.1	Make		
4.2	Type	Resin Cast	
4.3	Reference standard		
4.4	CT ratios		
4.5	Class of Insulation	Class-E	
4.6	Protection class	5P20	
4.7	Metering class	5	
4.8	VA burden for Relaying CT-Incomer	Based on requirement.	
5.0	**AMMETERS/MULTIFUNCTION METERS AND VOLTMETERS**		
5.1	Make & Model no.		
5.2	Type	Digitalwith inbuilt phase selector	
5.3	Communication Protocol	RS485 on MODBUS	
5.4	Accuracy class	1	
6.0	**CONTROL & INDICATIONS**		
6.1	Push button		
6.1.1	Make and model no.		
6.1.2	Type	Flush mounted type with touch proof terminals	
6.2	LEDs		
6.2.1	Make & Model no.		
6.2.2	Type	Flush mounted type with touch proof terminals	
7.0	**TERMINAL BLOCKS**		
7.1	Make & Model no.		
7.2	Spare terminals	Equal to 20% of active terminals in each TB	
7.3	Power terminals	Stud type, screw driver operated	

S. No.	Description	Specification requirement	Vendor Data
7.4	Control terminals	Stud type, screw driver operated suitable for minimum 6sqmm wire.	
8.0	**TESTS**		
8.1	Confirmation of routine tests to be performed as per IS 60947	Yes/No	
8.2	IP 55 test shall be carried out during inspection	Yes/No	
8.3	Confirmation of Type tests to be performed (or report submitted) as per IS 60947	Type test report no./date	
8.4	Confirmation of Acceptance tests to be performed during inspectionas per IS 60947	Yes/No	
8.5	Temperature rise test to be carried out at NABL accredited lab.	Yes/No	
9.0	Deviation sheet against each clause of the specification	To be submitted	

BSES

Technical Specification of Power Transformer

Specification no – BSES-TS-24-TRPU-R0

Rev:		0
Date:		08 Apr 2022
Pages		90
Prepared by	Abhishek Harsh	
	Javed Ahmed	
Reviewed by	Srinivas Gopu	
	Abhinav Srivastava	
Approved by	Gaurav Sharma	
	K. Sheshadri	

08/04/22

INDEX

RECORD OF REVISION 3
1.0 SCOPE OF SUPPLY 4
2.0 CODES & STANDARDS 4
3.0 MAJOR DESIGN CRITERIA & PARAMETERS OF THE TRANSFORMER 5
4.0 CONSTRUCTION & DESIGN 6
5.0 MINIMUM PROTECTIVE DEVICES ON TRANSFORMER 17
6.0 FITTINGS AND ACCESSORIES ON TRANSFORMER 18
7.0 OLTC 22
8.0 APPROVED MAKE OF COMPONENTS 25
9.0 QUALITY ASSURANCE 26
10.0 PROGRESS REPORTING 28
11.0 INSPECTION & TESTING 28
12.0 PACKING, SHIPPING, HANDLING AND STORAGE 34
13.0 COMMISIONING SUPPORT 34
14.0 TRAINING 35
15.0 DEVIATIONS 35
16.0 DRAWINGS AND DOCUMENTS 35
ANNEXURE – A – SCOPE OF SUPPLY 38
ANNEXURE – B – SERVICE CONDITIONS 39
ANNEXURE – C – TECHNICAL PARTICULARS (DATA BY OWNER) 40
ANNEXURE – D – TECHNICAL SPECIFICATION FOR TRANSFORMER OIL 44
ANNEXURE – E – SPECIFICATION FOR NITROGEN INJECTION FIRE PROTECTION SYSTEM 46
ANNEXURE – F – SPECIFICATION FOR SILICAL GEL BREATHER 53
ANNEXURE – G – MANUFACTURING QUALITY ASSURANCE PLAN 56
ANNEXURE – H – TECHNICAL SPECIFICATION OF MATERIAL TRACKING -GPS DEVICE 78
SCHEDULE – A –GUARANTEED TECHNICAL PARTICULARS (DATA BY SELLER) 79
SCHEDULE – B –GUARANTEED TECHNICAL PERTICULARS OF TRANSFORMER OIL 88
SCHEDULE – C–RECOMMENDED SPARES (DATA BY SUPPLIER) 90

RECORD OF REVISION

Revision No	Item / clause no.	Nature of Change	Approved By

1.0 SCOPE OF SUPPLY

For scope of supply, refer Annexure A

2.0 CODES & STANDARDS

Material, equipment and methods used in the manufacture of power transformer shall conform to the latest edition of following:

IS 2026	Power Transformers
IS 2026-4	Terminal Marking, tappings and Connections for Power Transformers.
IS:3347	Dimensions for Porcelain Transformer bushing
IS:3637	Gas operated relays
IS:3639	Fitting & Accessories for power transformers
IS:4201	Application guide for CT's
IS:8478	Application guide for On-load tap changer
IS:10028	Code of practice for selection, installation & maintenance of transformers
IS 5561	Electrical Power Connectors
IS 5	Colors for ready mix paints
IS:335	Insulating oil
IS 6272	Industrial cooling fans
IS 12615	Three phase induction motors
IS/IEC 60034	Rotating Electrical Machines. (e.g. For Cooler Fan Motors.)
IS/IEC 60071	Co-ordination of Insulation.
IS 16227/IEC 61869	Current Transformers.
IS 8468/ IEC 60214	On Load Tap Changers
IS2026-7/IEC 60076-7	Loading Guide for Oil-Immersed Power Transformers.
IS 2026-8 /IEC 60076-8	Application Guide for Power Transformers.
IS 2026-10/IEC 60076-10	Determination of Transformer Sound Levels.
IS/IEC 60529	Degrees of Protection Provided by Enclosures (IP Code).
IS/IEC 60947	Low-Voltage Switchgear and Control gear.
IS/IEC 60137	Bushing for alternating voltage above 1000V
IS:1271/IEC 60085	Thermal evaluation and classification of electrical insulation
IEC 60076	Power transformers.
IEC 60156	Method for Determination of the Electric Strength for Insulating Oils.
IEC 60296	Specification for Unused Mineral Insulating Oils for Transformers and Switchgear.
IEC 60445	Basic& Safety principles for man-machine interface, marking and identification, Identification of Equipment Terminals and conductor terminals
BS 148	Determination of Transformer and Reactor Sound Levels.

BS 223	Application Guide for Power Transformers.
BS 2562	Terminal and Tapping Markings for Power Transformers.
	Indian Electricity Rules
	Indian Electricity Act
	CBIP manual

In the event of direct conflict between various order documents, the precedence of authority of documents shall be as follows:

a. Guaranteed Technical Particulars (GTP)
b. This Specification
c. Referenced Standards
d. Approved Vendor Drawings
e. Other documents

3.0 MAJOR DESIGN CRITERIA & PARAMETERS OF THE TRANSFORMER

3.1	Major design criteria	
3.1.1.	Voltage variation on supply side	+ / - 10%
3.1.2	Frequency variation on supply side	+ / - 5%
3.1.2	Transient condition	- 20% or + 10% combined variation of voltage and frequency
3.1.4	Service condition	Refer Annexure C
3.1.5	Insulation level	Refer Annexure C
3.1.6	Short circuit withstand level	Refer Annexure C
3.1.7	Overload capability	Refer Annexure C
3.1.8	Noise level	Refer Annexure C
3.1.9	Radio influence voltage	Refer Annexure C
3.1.10	Harmonic currents	Refer Annexure C
3.1.11	Partial discharge	Refer Annexure C
3.1.12	Parallel operation	Shall be designed to operate in parallel with transformer.
	Major parameters	
	Rating	Refer Annexure C
	Voltage ratio	Refer Annexure C
3.2.3	Vector group	Refer Annexure C
3.2.4	Impedance	Refer Annexure C
3.2.5	Losses	Refer Annexure C
3..2.5.1	No load loss	Refer Annexure C
.3..2.5.2	Load losses at principal tap	Refer Annexure C
3.2.6	Temperature rise top oil	Refer Annexure C
3.2.7	Temperature rise winding	Refer Annexure C
3.2.8	Flux density	Refer Annexure C
3.2.9	Current density	Refer Annexure C
3.2.10	Tappings on HV winding	Refer Annexure C
3.2.11	Design clearances	Refer Annexure C

4.0 CONSTRUCTION & DESIGN

4.1	Type	ONAN/ONAF, Copper wound, three phase, oil immersed with on load tap changer
4.1.1	Essential provision for ONAF cooling	See note 1 of Annexure C
4.1.2	Provision of mounting cooling fan at site in future at service condition.	Required
4.1.3	Provision of replacement of cooling fan at site in future at service condition	Required
4.1.4	Fan guard if fans mounted in future.	Required
4.2	Major parts	
4.2.1	Tank	
4.2.1.1	Material of construction	Robust mild steel plate without pitting and low carbon content
4.2.1.2	Plate thickness	Adequate for meeting the requirements of pressure and vacuum type tests as per CBIP. Test will be conducted on each transformer tank for design validation.
4.2.1.3	Welding features	i) All seams and joints shall be double welded ii) All welding shall be stress relieved for sheet thickness greater than 35 mm iii) All pipes, radiators, stiffeners, welded to the tank shall be welded externally
4.2.1.4	Tank feature	i) Adequate space at bottom for collection of sediments ii) Stiffeners provided for rigidity and Designed to prevent accumulation of water iii) No internal pockets in which gas / air can accumulate iv) No external pockets in which water can lodge v) Tank bottom with welded skid base vi) Tank cover sloped to prevent retention of rain water vii) Minimum disconnection of pipe work and accessories for cover lifting viii) Tanks shall be of a strength to prevent permanent deformation during lifting, jacking, transportation with oil filled ix) Tank to be designed for oil filling under vacuum x) Fitted with lifting lug to lift the tank cover only xi) Manhole of sufficient size required for inspection of core and winding

		xii) Oil level indicator for transportation
4.2.1.5	Flanged type adequately sized inspection cover rectangular in shape required for	i) HV line bushing ii) LV line bushing iii) LV neutral bushing and NCT connection iv) OLTC to winding connection from both sides v) Core assembly ear thing Inspection covers should be provided with jacking screws & handle and shall not weigh more than 25 KG . Overall design shall be in such a way that there shall not be any hindrance/overlapping of some other component, in front of any of the inspection covers.
4.2.1.6	Fittings and accessories on main tank	See under fittings and accessories
4.2.2	Conservator for the main tank	
4.2.2.1	Capacity	Adequate between highest and lowest visible levels to meet the requirement of expansion of oil volume in the transformer and cooling equipment from minimum ambient temperature to 100 °C
4.2.2.2	Conservator oil preservation system	By flexible rubber bag (air cell) placed inside conservator
4.2.2.3	Air cell material	Special type of fabric coated with special grade nitrile rubber, outer surface oil resistant and inner surface ozone resistant
4.2.2.4	Conservator features	i) Conservator shall be bolted into position so that it can be removed for cleaning / other maintenance purposes ii) Main pipe from tank shall project about 20 mm above conservator bottom for creating a sump for collection of impurities iii) Conservator minimum oil level corresponding to minimum temperature shall be well above the sump level iv) It shall be possible to remove and Replace the air cell if required v) Conservator to main tank piping shall be supported at minimum two points.
4.2.2.5	Fittings and accessories on main tank conservator	i) Prismatic oil gauge with NORMAL, MINIMUM and MAXIMUM marking. ii) End cover. iii) Oil filling hole with cap iv) Magnetic oil gauge with LOW LEVEL Alarm contact. v) Silica Gel dehydrating breather with Oil seal and dust filter with clear acrylic single piece clearly transparent cover resistant to UV rays.

		vi) Drain cum filling valve (gate valve) with locking rod and position Indicator made of Brass, 25 mm with Cover plate. vii) Shut off valve (gate valve) with position indicator made of Brass Located before and after Buccholz relay, 80 mm. viii) Flange for breather connection. ix) Air release valve on conservator (gate valve) made of Brass, 25 mm with cover plate x) Air release plug as required
4.2.2.6	Essential provision for mounting of conservator	Conservator to be mounted in such a manner that the top cover of the transformer can be lifted without disturbing the conservator
4.2.2.7	Essential provision for breather	i) Breather body should be Aluminum pressure die casted, shot blasted and power coated. ii) Container and oil cup should be 143R grade UV resistant polycarbonate. iii) All gaskets should be of nitrile cork rubber. iv) Breather should be flanged type not threaded type v) Breather piping shall not have any valve placed in between vi) Breather piping from conservator shall be supported in such a manner that the maximum unsupported length of the of the breather piping shall not be more than 3 meters vii) Breather shall be removable type mounted at a height of 1400 mm from ground level. viii) Silica Gel used in breather should be of ix) ROUND BALL type & 2.5 mm dia. Breather shall be tested for 0.35 kg/cm for all joints
4.2.3	Conservator for OLTC	
4.2.3.1	Capacity	i) Adequate between highest and lowest visible levels to meet the requirement of expansion of oil volume in the OLTC from minimum ambient temperature to 100 deg cent. . ii) Separate conservator to be provided for OLTC and Main tank
4.2.3.2	Conservator oil preservation system	Conventional
4.2.3.3	OLTC conservator features	Same as 4.2.2.4 except air cell features
4.2.3.4	Fittings and accessories on OLTC conservator	i) Prismatic oil gauge with NORMAL and MINIMUM marking ii) End cover

		iii) Oil filling hole with cap iv) Magnetic oil gauge with LOW LEVEL Alarm contact v) Silica gel dehydrating breather with oil seal and dust filter with clear acrylic single piece clearly transparent cover resistant to UV rays vi) Drain valve (gate valve)With locking rod and position Indicator made of Brass, 25 mm with cover plate vii) Shut off valve (gate valve) with Position indicator made of Brass ocated before oil surge relay, 25 mm viii) Flange for breather connection ix) Air release plug as required
4.2.3.5	Essential provision for mounting of OLTC conservator	OLTC conservator to be mounted in such a way that the OLTC can be inspected / maintained without disturbing the OLTC conservator
4.2.3.6	Essential provision for OLTC breather	i) Breather piping shall not have any valve placed in between ii) Breather piping from conservator shall be supported in such a manner that the maximum unsupported length of the of the breather piping shall not be more than 3 meters iii) Breathers shall be removable type mounted at suitable height from ground so that it can be attended to easily for inspection / maintenance
4.2.4	Radiators	
4.2.4.1	Material	Pressed Steel
4.2.4.2	Thickness	Minimum 1.2 mm
4.2.4.3	Features	Detachable type with lifting lugs, air release plug, drain plug, isolating valve top and bottom in each radiator, Radiator support from ground if required
4.2.4.4	Essential provision if radiators mounted separately	Expansion bellow to be provided in the pipes between main tank and radiator headers
4.2.4.5	Essential provision for all type of radiators provided	Radiator header pipes shall not originate from tank top cover to make the tank top cover removable at site with minimum manpower.
4.2.5	Core	
4.2.5.1	Material	High grade, non ageing, low loss, high permeability, grain oriented, cold rolled silicon steel lamination
4.2.5.2	Grade	Premium grade minimum M3 or better
4.2.5.3	Lamination thickness	Max. 0.23 mm with insulating coating on both sides
4.2.5.4	Design flux density at rated conditions at principal tap	As per manufacturers design.

4.2.5.5	Maximum flux density at 10% over excitation / over fluxing	As per Annexure C , Cl. 35.0
4.2.5.6	Core design features	i) Magnetic circuit designed to avoid short circuit paths within core or to the earthed clamping structure ii) Magnetic circuit shall not produce flux components at right angles to the plane of lamination to avoid local heating iii) Least possible air gap and rigid clamping for minimum core loss and noise generation iv) Adequately braced to withstand bolted faults on secondary terminals without mechanical damage and damage / dis-placement during transportation and positioning v) Percentage harmonic potential with the maximum flux density under any condition limited to avoid capacitor overloading in the system vi) All steel sections used for supporting the core shall be thoroughly sand blasted after cutting, drilling, welding vii) Provision of lifting lugs for core coil assembly viii) Supporting framework designed not to obstruct complete drainage of oil from transformer ix) The insulation of core to bolts and core to clamps plates shall be able to withstand a voltage of 2 kV rms for one minute, however boltless construction shall be preferred to avoid generation of hot spots and decomposition of oil as well as to reduce noise level.
4.2.6	Winding	
4.2.6.1	Material	Electrolytic Copper
4.2.6.2	Maximum current density allowed	3 A/mm^2
4.2.6.3	Winding Insulating material	Class A, non catalytic, inert to transformer oil, free from compounds liable to ooze out, shrink or collapse
4.2.6.4	Winding Insulation	Uniform
4.2.6.5	Design features	i) Stacks of winding to receive adequate shrinkage treatment before final assembly ii) Connection braced to withstand shock during transport, switching, short circuit, or other transients. iii) Minimum out of balance force in the transformer winding at all voltage ratios. iv) Conductor width on edge exceeding six

		times its thickness v) Transposed at sufficient intervals. vi) Threaded connection with locking facility vii) Winding leads rigidly supported, using guide tubes if practicable viii) Winding structure and major insulation not to obstruct free flow of oil through ducts ix) Provision of taps as indicated in the technical particulars
4.2.6.6	Essential provision for core coil assembly	i) Core coil assembly shall be mounted on bottom of the tank. ii) Earthing of core clamping structure and earthing of magnetic circuit shall be in line with CBIP reference manuals.
4.2.7	Transformer Oil	Should be in accordance with specification as per Annex D of this document.
4.2.8	Bushings and terminations	
4.2.8.1	Type below 52 kV	Oil communicating , outdoor, removable
4.2.8.2	Type 52kv and above	Oil filled porcelin condenser & non oil communicating type with oil level gauge, oil filling plug and drain valve if not hermetically sealed, tap for capacitance and loss factor measurement, removable without disturbing bushing CT'S.
4.2.8.3	Arcing horns.	Not required.
4.2.8.4	Termination on HV side bushing	By bimetallic connectors suitable for ACSR/AAAC conductor, cable connection through cable box with disconnecting link as per annexure A Scope of Supply.
4.2.8.5	Termination on LV side bushing	Cable connection through cable box with disconnecting link as per annexure A, scope supply.
4.2.8.6	Minimum creepage distance of bushing	As per annexure C cl 38.0
4.2.8.7	Protected creepage distance	At least 50 % of total creepage distance
4.2.8.8	Continuous current rating	Minimum 20 % higher than the current corresponding to the minimum tap of the transformer.
4.2.8.9	Rated thermal short time current	As per annexure C Cl 38.0
4.2.8.10	Atmospheric protection for clamp and fitting of iron and steel.	Hot dip galvanizing as per IS 2633
4.2.8.11	Bushing terminal lugs in oil and air.	Tinner copper.
4.2.8.12	Sealing washers /gasket ring.	Nitrile rubber/ Expanded TEFLON(PTFE) as applicable
4.2.9	HV, LV, LV Neutral cable box	Required.
4.2.9.1.1	Material of construction	Sheet steel min 4.0 mm thick. Inspection covers

		shall be min 3mm thick.
4.2.9.1.2	Cable box doors (33kV and 11kV Cable boxes)	The doors should be internal anti theft hinge with minimum opening angle of 120º, minimum 3 nos. with lockable handle & with padlocking facility
4.2.9.2	Cable entry	At bottom through detachable gland plate with cable clamps of non magnetic material
4.2.9..3	Cable size for HV	As pe annexure C Cl 15.1
4.2.9.4	Cable size for LV	As per Annexure C Cl 15.2
4.2.9.5	LV Neutral connection	As per Annexure C Cl 15.3
4.2.9.6	Detachable gland plate material for HV, LV, LV Neutral box	As per GTP
4.2.9.7	Gland plate thickness for HV, LV, LV Neutral box	As per GTP
4.2.9.8	Cable gland for HV, LV, LV Neutral cables	As per GTP
4.2.9.9	Cable lug for HV& LV cables	As per CL 4.9 of this spec and suitable for cable size as per GTP
4.2.9.10	Essential parts	i) Disconnecting chamber ii) Flexible disconnecting link of tinned copper iii) Tinned copper busbar for Owner's cable termination with busbar supports iv) Detachable gland plate as per Schedule A GTP Cl. 24.4, 24.5, 25.4, 25.5, 26.4, 26.5 v) Earthing boss for the cable box vi) Earthing link for the gasketted joints at two points for each joint vii) Earthing provision for cable armour / screen viii) Flange type Inspection cover with handle for Inspecting bushing and busbars on top as well as on front cover ix) Anti theft hinged type door with lockable handle & with padlocking facility for cable box. x) Drain plug xi) Rainhood on gasketted vertical joint xii) Danger plate made of Anodized aluminum with white letters on red background on HV and LV side fixed by rivets. xiii) Phase marking plate inside cable box near termination as well as on front cover of cable box made of anodized aluminum with black letters on satin silver background on HV and LV side fixed by rivets xiv) Support insulators for the busbars shall be epoxy resin cast type. xv) Space heaters for HV and LV cable box controlled by thermostat

4.2.9.11	Terminal Clearances	As per Annexure C technical particulars
4.2.9.12	Termination height required for cable termination	Minimum 1000 mm
4.2.9.13	Essential provision for LV neutral cable box	i) Neutral shall be outdoor type bushing OR with cable box. Box shall have adequately sized inspection cover suitable for inspection of bushings / replacement / maintenance of neutral CT. For Outdoor Bushing the NCT shall be mounted in IP55 box. ii) Knife switch with locking arrangement to be provided to disconnect the neutral from grounding. Connection from Neutral bushing to the knife switch shall be with 100x12mm Tinned copper bus bar. Bus Bar shall brought down to the bottom of the transformer supported by suitable support insulator made of epoxy resin cast (insulator shall be suitable for outdoor application suitable for connecting. iii) Knife switch shall be suitable for connecting 2 runs of 75 x 10 mm size GS strip. iv) Height of knife switch shall be at maximum 1500 mm. Housing of Knife switch shall be suitable for easy & quick operations.
4.2.10	Current Transformers	
4.2.10.1	WTI CT	As per GTP
4.2.10.1.1	Rating	As per GTP
4.2.10.1.2	Mounting	In the turret of the bushing
4.2.10.1.3	Essential provision	i) CT mounting shall be such that CT can be replaced without removing tank cover ii) CT secondaries shall be wired upto TB with TB spec. as per Cl. 4.7of this specification
4.2.10.2	Neutral CT	
4.2.10.2.1	Type	Cast resin
4.2.10.2.2	Rating	As per GTP
4.2.10.2.3	Location of NCT	Separate box with TB arrangement for secondary Bushing type not acceptable.
4.2.10.2.4	Essential provision	i) CT mounting shall be such that CT can be replaced without removing the neutral cable box. ii) CT secondary shall be wired upto TB
4.2.10.2.5	Size of NCT Box	Overall size of NCT box shall not exceed 1200x600x1000 mm including canopy on top.
4.2.11	Marshalling Box Cubicle	
4.2.11.1	Material of construction	Construction of Marshalling Box should be stainless steel 304 grade (Min) with powder coating of specified color shed
4.2.11.2	Door hinges of marshalling	Required

	box should be from inner side and should not be exposed to rain.	
4.2.11.3	Major equipments in Marshalling box	i) Mechanical gauge for HV and LV WTI ii) Mechanical gauge for OTI iii) Power supply unit (PSU) for remote monitoring of OTI and WTI temperatures. PSU suitable for 48V-265V AC/DC supply. iv) Make of OTI and WTI is Precimeasure 1005AH/1007H model with PSU v) Electronic OTI/WTI Scanner vi) Capillaries for WTI and OTI min 15M length vii) Control & Protection Equipment for Fan Control viii) DC contactors to be provided for all trouble free signals. Same to be wired up to the TB ix) Other panel accessories listed elsewhere
4.2.11.4	Gland plate	i) Min. 3 mm thick detachable with knockout 6 x 1 inch ii) Gland plate mounting should be from inside only
4.2.11.5	Contacts wired to terminal block	i) WTI alarm and trip ii) OTI alarm and trip iii) Buchholz relay alarm and trip iv) OSR trip contacts v) MOG low level alarm vi) MOG on OLTC low level alarm vii) PRV main tank trip viii) PRV OLTC trip ix) Sudden pressure relay trip x) WTI and OTI PSU/ relay contacts of the temperature scanner. xi) Note: 2NO +2NC auxiliary contacts for all the above to be provided for customer use (By using auxiliary relay)
4.2.11.6	Signals to be wired to terminal block	i) WTI CT ii) NCT iii) Capillaries for WTI and OTI iv) 4 to 20 mA signals for WTI and OTI repeater located elsewhere
4.2.11.7	Ingress protection	IP 55 plus additional rain canopy to be provided
4.2.11.8	Welding	Continuous welding on joints, welding at regular intervals on joints and filling of gaps with use of M seal not accepted
4.2.11.9	Cable entry	Bottom for all cables
4.2.11.10	Panel internal Access	Front only through front door double leaf with antitheft hinges
4.2.11.11	Pane back access	None
4.2.11.12	Mounting of marshalling box	Separately mounted as per GTP
4.2.11.13	Panel supply	415 V AC, Three phase, 50 Hz

4.2.11.14	Panel accessories	i) Cubicle lamp with door switch and separate fuse / MCB ii) Approved space heaters controlled by thermostat and separate fuse / MCB iii) Incoming fuse switch / MCB for the incoming supply iv) Panel wiring diagram fixed on back of panel door on Aluminum plate engraved fixed by rivet v) Stainless steel door handle with lock & additional facility for padlock vi) Earthing boss for the marshaling box vii) Single phase power plug industrial type 15/5 Amp. With MCB viii) Single phase preventer
4.2.11.15	Painting of marshalling box	As per Cl. 4.10 of the specification
4.2.11.16	Hardware, Gasket, Cables and Wires, Terminal blocks, Cable gland, Cable lugs of marshalling box	As per Cl. 4.3, 4.4, 4.6, 4.7, 4.8, 4.9 of the specification respectively.
4.2.11.17	Fan motors control installed in marshalling box or separate fan control cubicle	i) 2 x 50% fans ii) Complete fan control with fuse switch, contactor, Bimetallic relay, in starter circuit with type 2 coordinated rating as per IS iii) Automatic control from WTI contact iv) Provision for manual control both from local/ remote. v) Fan Control Cubicle should be separately mounted. vi) 2RC/2RS type bearings shall be used instead of ball bearings. vii) Fan enclosure shall be perforated sheet with holes at motor side with ground support.
4.2.11.18	Control Cable Length	All the control Cable shall have minimum 15 Meters of length for all control cable, OTI, WTI Capillaries and NIPFPS control cables also.
4.3	Hardware	
4.3.1	External	M12 size & below Stainless Steel & above M12 Hot Dip galvanized steel.
4.3.2	Internal	Cadmium plated except special hardware for frame parts and core assembly as per manufacturer's design
4.3.3	Provision of fully enclosed Aluminium hoods/Canopy for following accessories of power transformer for protection against water ingress.	All Oil Surge Relays, Buchholz Relay, Pressure release Valve.
4.4	Gasket	
4.4.1	For transformer, OLTC	Nitrile rubber based

	chamber, PT chamber, surfaces interfacing with oil like inspection cover etc.	
4.4.2	For cable boxes, marshalling box, OLTC drive mechanism etc.	Neoprene rubber based
4.4.3	Tank top cover gasket	It shall be double O ring type sealing arrangement seating over a double groove made in transformer tank & top cover.
4.5	Valves	
4.5.1	Material of construction	Gun metal/Brass
4.5.2	Type	Both end flanged gate valve / butterfly valve depending on application
4.5.3	Size	As per manufacture's standard
4.5.4	Essential provision	Position indicator, locking rod, padlocking facility, valve guard, cover plate.
4.6	Cable routing on Transformer	Control cable for accessories on transformer tank to marshalling box and WTI, OTI Capillaries shall be routed through perforated Covered GI trays
4.6.1	Control cable specification	i) PVC insulated, extruded PVC inner sheathed, armoured, extruded PVC outer sheathed 1100V grade control cable as per latest edition of IS 1554 Part 1 ii) Minimum 2.5 sqmm for signals and 4 sqmm for CT with multistrand copper conductor
4.6.2	Specification of wires to be used inside marshalling box, OLTC drive mechanism.	PVC insulated multistrand flexible copper wires of minimum 2.5 sqmm size, 1100 V grade as per latest edition of relevant IS
4.6.3	Essential provision for Capillary routing from transformer to marshalling box	Routing shall be done in such a way that adequate protection is available from mechanical and fire damage.
4.7	Terminal Blocks to be used by the vendor	Nylon 66 material, minimum 6 sqmm stud type screw driver operated for control wiring and potential circuit. Terminal blocks to be located in such a way to achieve the termination height as min 250 mm from grand plate.
4.7.1	Essential provision for CT terminals	Sliding link type disconnecting terminal block screwdriver operated stud type with facility for CT terminal shorting material of housing melamine/Nylon66
4.8	Cable glands to used by the vendor	Nickel plated brass double compression weatherproof cable gland
4.9	Cable lugs to be used by the vendor	
4.9.1	For power cables	Long barrel medium duty bi-mettalic lug with knurling on inside surface
4.9.2	For control cable	Tinned copper pre insulated Pin Ring, Fork type as applicable. For CT connection ring type lug shall be used.

4.10	Painting of transformer, conservator, OLTC, Radiator, cable boxes marshalling box.	
4.10.1	Surface preparation	By 7 tank pretreatment process or shot blasting method
4.10.2	Finish on internal surfaces of the transformer interfacing with oil	Bright Yellow heat resistance and oil resistant paint two coats. Paint shall neither react nor dissolve in hot transformer insulating oil.
4.10.3	Frame parts	Bright Yellow heat resistance and oil resistant paint two coats. Paint shall neither react nor dissolve in hot transformer insulating oil.
4.10.4	Finish on inner surface of the marshalling box	White Polyurethane paint anti condensation type two costs, minimum dry film thickness 80 microns
4.10.5	Finish on outer surface of the transformer, conservator, radiator, cable boxes, marshalling box	Smoke Grey (IS shade 692) polyurethane paint two coats, minimum dry film thickness 80 micros

5.0 MINIMUM PROTECTIVE DEVICES ON TRANSFORMER

5.1	Spring loaded with detachable diaphragm type pressure relief valve with two trip contacts for the main tank of LSM model with limit switch design IP 65 with additional rain hood. PRV Oil discharge pipe arrangement	Required
5.2	Spring loaded with detachable diaphragm type pressure relief valve with two trip contacts for OLTC of LSM model with limit switch design IP 65 with additional rain hood. Oil discharge pipe arrangement	Required
5.3	Double float bucchholz relay with alarm and trip contacts, service and test position, with test cock for the main tank, terminal box shall be IP 65 with drain plug for rainwater draining. Additional rain hood shall be provided.	Reed Switch Type shall be required
5.4	Oil surge relay with two contacts, services and test position, with test cock for OLTC tank, terminal box shall be IP 65 with drain plug for rainwater draining. Additional rain hood shall be provided.	Required
5.5	Sudden pressure relay with trip contact for the main tank	Required

5.6	Oil temperature indicator metallic bulb type 150 mm diameter with maximum reading pointer, potential free independent adjustable alarm and trip contacts, resetting device with temperature sensing element	Required
5.7	Winding temperature indicator 150 mm diameter with maximum reading pointer, two sets of potential free independent adjustable alarm and trip contacts, resetting device with temperature sensing element, thermal image coil	Required
5.8	2 No's PT 100 sensors/RTDs for winding emperature indication wired upto TB's in marshalling box for external connection.	Required
5.9	Magnetic switching for all the protective devices including Buchholz (alarm and Trip) OSR,SPR,WTI and OTI. Mercury switching is not acceptable	Required

6.0 FITTINGS AND ACCESSORIES ON TRANSFORMER

6.1	Rating and diagram plate	Required
6.1.1	Material	Anodized aluminum 16SWG
6.1.2	Background	SATIN SILVER
6.1.3	Letters, diagram & boder	Black
6.1.4	Process	Etching
6.1.5	Name plate details	Following details shall be provided on rating and diagram plate as a minimum i) Type / kind of transformer with winding material ii) Standard to which it is manufactured iii) Manufacture's name iv) Transformer serial number v) Month and year manufacture vi) Rated frequency in Hz vii) Rated voltages in kV viii) Number of phases ix) Rated power in kVA x) Type of cooling (ONAN) xi) Rated currents in A xii) Vector group symbol xiii) 1.2/50µs wave impulse voltage withstand level in kV xiv) Power frequency withstand voltage in kV

		xv) Impedance voltage at rated current and frequency in percentage at principal, minimum and maximum tap xvi) Load loss at rated current xvii) No load loss at rated voltage and frequency xviii) Auxiliary loss xix) Continuous ambient temperature at which ratings apply in □ C xx) Top oil and winding temperature rise at rated load in deg C xxi) Temperature gradient of HV and LV winding xxii) Winding connection diagram xxiii) Weight of radiator xxiv) Volume and weight of oil in radiator xxv) Transport weight of transformer xxvi) Weight of core and frame xxvii) Weight of winding xxviii) Weight of core and winding xxix) Weight of tank and fittings xxx) Total weight xxxi) Volume of oil xxxii) Weight of oil xxxiii) NCT, WCT, details xxxiv) Type of OLTC xxxv) Tapping details xxxvi) Name of the purchaser xxxvii) PO no and date xxxviii) Guarantee period
6.2	Instruction plate for OLTC anodized aluminum black lettering on satin silver background fixed by rivet	Required
6.3	Oil filling instruction plate anodized aluminum black lettering on satin silver background fixed by rivet	Required
6.4	Valve schedule plate anodized aluminum black lettering on satin silver background fixed by rivet	Required
6.5	Instruction plate anodized aluminum black lettering on satin silver background for flexible air cell for oil conservator	Required
6.6	Terminal marking plate for bushing WTI, OTI & RTD anodized aluminum black lettering on satin silver background fixed by rivet	Required
6.7	Company monogram plate	Required

6.8	Lifting lugs / bollards with antiskid head to lift complete transformer with oil	Required
6.9	Lashing lug	Required
6.10	Jacking pad with Haulage hole to raise or lower complete transformer with oil	Required
6.10.1	Essential provision for jacking pads. Designed in such a way that jacking of complete transformer with oil shall be possible with 3 nos jacking pads out of 4 nos jacking pads provided as minimum	Required
6.11	Detachable bi-directional roller assembly with corrosion resistant bearing, fitting / nipple for lubrication or with permanently lubricated bearing, anti earthquake locking device. The wheels shall be capable of swiveling when transformer is lifted with provision for locking the swivel movement. Roller shall be suitable for 90 lb rail. Suitable antirolling clamp for 90 lb rail minimum 4 nos. shall be provided	Required
6.12	Pockets for OTI, WTI, & RTD on tank	Required (with one spare pocket for future use)
6.13	Pockets for ordinary thermometer on tank cover, top and bottom header of radiator, top of each radiator	Required
6.14	Ordinary thermometer 4 nos.	Required
6..15	Drain valve (gate valve) for the main tank, 80 mm	Required
6.16	Drain valve (gate valve) for OLTC, 50 mm	Required
6.17	Drain valve (gate valve) for all headers, 50 mm	Required
6.18	Filter valve (gate valve) at top and bottom of the main tank, 50 mm	Required
6.19	Sampling valve (gate valve) at top and bottom of the main tank, 15 mm	Required
6.20	Vacuum breaking valve (gate valve), 25 mm	Required
6.21	Drain plug on tank base	Required
6.22	Air release plug on various fitting and accessories	Required
6.23	Earthing pad on tank for transformer earthing complete with non ferrous nut, bolt, washers, spring washers	Required

	etc.	
6.24	Vacuum pulling pipe with blanking plate on main conservator pipe work	Required
6.25	Rainhood (canopy) for Buccholz relay, PRV on main transformer and OLTC, OSR relay of OLTC	Required
6.26	Rainhood for vertical gasketted joints, in cable boxes	Required
6.27	Oil level gauge on tank for transformer shipment	Required
6.28	Earthing bridge by copper strip jumpers on all gasketted joints at least two points for electrical continuity	Required
6.29	Aluminium ladder with anticlimbing device and safety flap, with lockable hinged plate for at least 1.5 m from ground level. Ladder shall be located in such a way that it avoids any hindrance to operation of nearby electrical/mechanical accessories etc.	Required
6.30	OLTC panel as specified	Required
6.31	Skid base welded type	Required
6.32	Core, frame to tank earthing	Required
6.33	Danger plate made of anodized aluminium white lettering on red background fixed by rivet	Required
6.34	Identification plate for all accessories, protective devices, instruments, thermometer / RTD pockets, earthing terminals, all inspection covers, cable boxes, marshalling boxes etc.made of anodized aluminium black lettering on silver background fixed by rivet	Required
6.35	Provision for Valves and NRV for mounting of Nitrogen fire protection System	Required
6.36	Separate structure for mounting of cooling fans	Required
6.37	Terminal box of contacts from, Core and Yoke with shorting link at top cover of Transformer	Required. The IR test will be performed on these terminals on trailer prior to unloading at site.
6.38	Aluminum ladder on transformer top cover to conservator top	Required
6.39	Space heaters with thermostat control in HV and LV cable box	Required

7.0 OLTC

7.1	Requirement	i) For 33kV – CTR make EQ16 or equivalent. ii) For 66kV – CTR make FQ 16 or equivalent No in-tank OLTC acceptable.
7.2	OLTC gear location	Side mounted on conservator side not in front of HV bushing
7.3	Type of OLTC gear	i) The tapings shall be controlled by a high speed resistor transition type gear in which tap change is carried out virtually under 'no volt' 'no ampere' condition and the selector switches do not make and break any current, main current is never interrupted and a resistor is provided to limit the arching at diverter contacts to a minimum suitable for outdoor mounting and continuously rated for operating at all position including positions in the middle of tap change. In particulars, the tap change gear shall be suitable when delivering the full output plus permissible overload and operating the lowest voltage tap on the HV side. ii) The value of the transition resistor shall be indicated on the rating plate of the OLTC with continuous current rating with reference to design ambient temperature specified.
7.4	Tappings	As per Cl. 34 of Annexure C
7.5	Operation of OLTC gear	Selection of local / remote operation by selector switch on OLTC drive mechanism
7.5.1	local operation	From OLTC drive mechanism through pistol grip rotary switch as well as emergency mechanical hand operation.
7.5.2	Remote operation	From digital RTCC provided by customer /SCADA depending on the selection of control on digital RTCC panel.
7.6	Safety interlocks in OLTC	Following safety interlock to be provided in OLTC as minimum i) Positive completion of tap changing step once initiated ii) Blocking of reverse tap change command during a forward tap change already in progress until the mechanism resets and vice – versa iii) Cutting of electrical circuits during mechanical operation iv) Mechanical stops to prevent overrunning of the mechanism at the end taps v) Interlock to avoid continuous tap change

		which will cut off motor supply in such events vi) Raise / lower command in OLTC and Digital relay shall be positively interlocked
7.7	Feature of OLTC	i) OLTC mechanism and associated controls shall be housed in an outdoor, IP 55, weatherproof, vermin proof and dust proof cabinet ii) It shall be ensured that oil in compartments containing contacts making and breaking current compartments containing contacts not making and breaking current and main transformer tank does not mix iii) The hand cranking arrangement shall be such that it can be operated at standing height from ground level iv) Mechanical indicator to indicate completion of tap change operation shall be provided with suitable (Green & Red) colour code to confirm correct method of completion of tap change operation v) Contractors shall be placed in the OLTC driving mechanism in such a way that the name-plate shall be visible on opening of door. vi) Protective cover shall be provided for raise and lower push buttons, external ON-OFF switch, which are mounted on OLTC driving mechanism door. This is required to prevent unauthorized person operating these buttons. vii) It shall be possible to remove the top cover of the OLTC tank without difficulty. The OLTC conservator, piping & oil surge relay shall be placed accordingly. viii) The tap change equipment shall be so designed that if the mechanism is struck in an intermediate position, the transformer shall be capable of delivering full load without any damage. ix) Limit switches may be connected in the control circuit of the operating motor provided that a mechanical de-clutching mechanism is incorporated. Otherwise it shall be directly connected to the operating motor circuit and mechanical stop. x) Thermal devices or other means shall be provided to protect the motor and control circuits xi) The tap changer shall be capable of permitting parallel operation with other

		transformer for which necessary wiring and accessories, if any, shall be provided xii) The control scheme for the tap changer shall be provided for independent control of the tap changers when the transformers are in Independent service. In addition provision shall be made to enable parallel operation control also at times so that the tap changer will be operated simultaneously when oneunit is in parallel with another it will not become out of step and this will eliminate circulating current. Additional features like master /follower and visual indication during the operation of motor shall also be incorporated. xiii) OLTC shall be suitable for bi- directional power flow in transformer xiv) Mechanical indicator and operation counter shall be visible through glass window OLTC drive mechanism door xv) External ON /OFF switch in addition to door switch xvi) All mcb shall be located in such a way that they are easily replaceable. xvii) Motor protection relay shall be provided with single phasing prevent for both current and voltage unbalance. xviii) All accessories inside drive mechanism shall be provided with metallic label, no sticker permitted.
7.8	Essential BOM for OLTC drive mechanism (indicative only, bidder to provide all necessary components to complete the function of the OLTC)	i) Control circuit transformer 415/55-0-55 V, adequate capacity ii) Local remote selector switch 1 pole, 2 way, 6A, pistol grip iii) Retaining switch raise / lower iv) Handle interlock switch v) Raise / lower switch 1 pole, 2way, 6A, pistol grip vi) Lower limit switch vii) Raise limit switch viii) Tap changer motor, 415 V AC, 3 phase, adequate rating ix) Motor protection relay with single phasing preventor x) Motor control contactors raise / lower xi) Stepping relay xii) Out of step switch xiii) Tap position indicator xiv) Operation counter xv) Emergency stop push button xvi) Tap change incomplete scheme with timer

		xvii) Required indication lamp
7.9	Essential provision of accessories on OLTC	i) Pressure relief valve ii) Oil surge relay
7.10	Drive mechanism accessories	i) Cubical lamp with door switch and separate fuse / MCB with external ON /OFF switch on front cover of OLTC drive mechanism ii) Approved space heaters controlled by thermostat and separate fuse / MCB iii) Incoming fuse switch / MCB for the incoming supply iv) Panel wiring diagram fixed on back of panel door aluminium engraved fixed by rivet v) Nylon 66 terminal block min 4 sqmm screw type, with 10% spare terminals vi) Stainless steel door handle with lock & additional facility for padlock vii) Earthing boss
7.11	Hardware, Gasket, Cables and Wires, Terminal blocks, Cable gland, Cable lugs of OLTC drive mechanism	As per Cl. 4.3, 4.4, 4.6, 4.7, 4.8, 4.9 of the specification respectively.
7.12	OLTC and drive mechanism painting	As per Cl. 4.10 of the specification
7.13	RTCC panel	Not in the scope of supply.

8.0 APPROVED MAKE OF COMPONENTS

8.1	CRGO	Nippon/JFE/Posco
8.2	Copper	Birla copper/Sterlite
8.3	Pre compressed Pressboard	Raman Board, Mysore/ Senapathy Whiteley
8.4	Laminated Wood	Permalli Wallance / Rochling Engineers
8.5	Oil	Apar/Savita/Raj
8.6	Condensor Bushings (OIP)	CGL/BHEL/ABB/ALSTOM
8.7	Porcelain Bushing	CJI/Jayshree Insulators/BHEL
8.8	Steel	TATA/Jindal/SAIL
8.9	Lugs/Glands	Jainson/Dowells/Comet
8.10	Radiators	CTR/Hi-Tech Radiators/Tarang Engineers
8.11	Fans	Marathon / Khaitan
8.12	Magnetic Oil Level Indicator	Sukrut /Yogna
8.13	Pressure relief valve	Sukrut / Qualitrol
8.14	Bucchholz Relay	Proyog / ATVUS
8.15	Oil surge Relay	Proyog / ATVUS

8.16	Winding Temperature Indicator	Precimeasure / Perfect Controls / Pradeep sales
8.17	Oil Temperature Indicator	Precimeasure / / Perfect Controls/ Pradeep Sales
8.18	Sudden Pressure Relay	Sukrut / Qualitrol/ATVUS
8.19	Aircell	Sukrut(Unirub)/Pronol / Rubber Product
8.20	Neutral CT	Pragati /ECS / KAPPA/ Reputed equivalent
8..21	WCT	Pragati / ECS / KAPPA/ Reputed equivalent
8.22	Switch	L&T (Salzer) / Siemens
8.23	HRC Fuse Links	Siemens / L&T/GE
8.24	Fuse base	Siemens / L&T/GE
8.25	AC Contactors & O/L Relay	L&T / Siemens / Schneider
8.26	Terminals	Connectwell / Elmex
8.27	Push buttons / Actuator	L&T / Siemens
8.28	Thermostat	Velco/Girish
8.29	Heater	Velco/Girish
8.30	Voltmeter Selector Switch	Siemens/ equivalent
8.31	Control selector switch	Siemens/ equivalent
8.32	Auxiliary Relays	Jyoti / Easun Rayrole
8.33	Timers	L&T /Siemens
8.34	Tap Position Indicator	Accord
8.35	Annunciator	Accord
8.36	Digital tap change counter	Selectron
8.37	LED cluster type indication lamp	MIMIC/ Siemens/ Binay

Note – Any other make of component to be approved by Owner

9.0 QUALITY ASSURANCE

9.1	Quality assurance	To be submitted before contract award. Program shall contain following i) The structure of the organization. ii) The duties and responsibilities assigned to staff ensuring quality of work. iii) The system for purchasing, taking delivery and verification of materials. iv) The system for ensuring quality of workmanship v) The system for control of documentation

		vi) The arrangements for the suppliers internal auditing vii) The system for retention of records. viii) A list of the administration and work procedures required to achieve and verify contracts quality requirements. These procedures shall be made readily available to the purchaser for inspection on request.
9.2	Quality plan	To be submitted by the successful bidder for approval. Plan shall contain following as a minimum i) An outline of the proposed work and programme sequence ii) The structure of the suppliers organization for the contract. iii) The duties and responsibilities assigned to staff ensuring quality of work for the contract. iv) Hold and notification points. v) Submission of engineering documents required by the specification. vi) The inspection of materials and components on receipt vii) Reference to the suppliers work procedures appropriate to each activity viii) Inspection during fabrication /construction. ix) Final inspection and test. x) Successful bidders shall include submittal of Mills invoice, Bill of lading, Mills test certificate for grade, physical tests, dimension, specific watt loss per KG for the core material to the purchaser for verification in the quality plan suitably.
9.3	Manufacturing environment	Bidder to ensure the following manufacturing areas should be maintain positive atmospheric pressure, clean, dust free (Clean room class ISO 9 or better as per ISO 14644-1) and humid controlled environment. i) Insulation storage ii) Core storage iii) Glue stacking area iv) core cutting line v) Winding manufacturing bay vi) Core building area vii) Core coil assembly area viii) Testing lab ix) Packing & dispatch area
9.4	Accessories environment	Bidder to ensure the following accessories to be kept in clean and coved location i) Piping ii) Radiators iii) Tank iv) Bushing (as per manufacturer's guideline) v) Marshalling box vi) Turret

		vii) Conservator viii) Insulating oil
9.5	Manufacturing Quality Assurance Plan	Refer Annexure G

10.0 PROGRESS REPORTING

10.1	Online document	To be submitted for purchaser approval for outline of production , inspection,testing,packing dispatch ,documentation programme
10.2	Detailed progress report	To be submitted to the purchaser once a month containing i) Progress on material procurement ii) Progress on fabrication iii) Progress on assembly iv) Progress on internal stage inspection v) Reason for any delay in total programme. vi) Details of test failures if any in manufacturing stages. vii) Progress on final box up. viii) Constraints/ Forward path.

11.0 INSPECTION & TESTING

11.1	Inspection and Testing during manufacture	
11.1.1	Tank and conservator	i) Check correct dimension between wheels demonstrate turning of wheels through 90 deg and further dimensional check. ii) Check for physical properties of material for lifting lugs, jacking pads etc. all load bearing welds, including lifting lug welds shall be subjected to required load tests iii) Leakage test of the conservator as per CBIP iv) Certification of all test results v) Oil leakage test on all tanks at normal head of oil plus 35 kN / sqm at the base of the tank for 24 hrs vi) Vacuum and pressure test on tank as type test as per CBIP vii) Leakage test of radiators as per CBIP.
11.1.2	Core	The below mentioned core critical points should complied by the bidder
11.1.2.1	Mother Core coil	i) Core material shall be directly procured either from the BSES approved manufacturer or through their authorized service centre/distributor and not through any contractor. ii) Verification & inspection of the mother coil at port & putting stamp & seal may be inspected by BSES.

11.1.2.2	Core cutting	Bidder should have in house core cutting facility for proper monitoring & control on quality. In case it is done outside cutting shall be done in presence of BSES.
11.1.2.3	Hydraulic core lifting	Bidder should have hydraulic core lifting facility to avoid any jerk at the time of core building
11.1.2.4	Core sample type testing	Reconciliation of mother coil by checking stamp & seal at factory before slitting. One sample of CRGO to be sealed for testing at ERDA/CPRI. Following Tests shall be conducted on the sample per P.O. i) Specific core loss measurement ii) Magnetic polarization iii) Magnetic permeability iv) Specific core loss measurement after accelerated ageing test v) Surface insulation resistivity vi) Electrical resistivity measurement vii) Stacking factor viii) Ductility(Bend test) ix) Lamination thickness x) Magnetization characteristics (B-H curve)
11.1.2.5	Core physical verification	i) Check on the quality of varnish if used on the stampings. a) Measurement of thickness and hardness of varnish on stampings. b) Solvent resistance test to check that varnish does not react in hot oil. c) Check over all quality of varnish by sampling to ensure uniform hipping colour, no bare spots. No ever burnt varnish layer and no bubbles on varnished surface. ii) Check on the amount of burns. iii) Bow check on stampings. iv) Check for the overlapping of stampings. Corners of the sheet are to be apart. v) Visual and dimensional check during assembly stage. vi) Check on complete core for measurements of iron-loss and check for any hot spot by exciting the core so as to induce the designed value of flux density in the core. vii) Check for inter laminar insulation between core sectors before and after pressing. viii) Visual and dimensional checks for straightness and roundness of core, thickness of limbs and suitability

		of clamps. ix) High voltage test (2 KV for one minute) between core and clamps. x) Certification of all test results.
11.1.2.6	Documents verification	Following documents to be submitted during the stage inspection i) Invoice of supplier ii) Mills test certificates iii) Packing list iv) Bill of lading v) Bill of entry certificates by customs
11.1.3	Insulating material	i) Sample check for physical properties of material ii) Check for dielectric strength iii) Visual and dimensional checks iv) Check for the reaction of hot oil on insulating materials v) Certification of all test results
11.1.4	Windings	i) Sample check on winding conductor for mechanical properties and electrical conductivity ii) Visual and dimensional check on conductor for scratches, dept. mark etc. iii) Sample check on insulating paper for PE value, bursting strength, electric strength iv) Check for the reaction of hot oil on insulating paper v) Check for the binding of the insulating paper on conductor vi) Check and ensure that physical condition of all materials taken for winding is satisfactory and free of dust vii) Check for absence of short circuit between parallel strands viii) Check for Brazed joints wherever applicable ix) Measurement of voltage ratio to be carried out when core / yoke is completely restocked and all connections are ready x) Certification of all test results
11.1.4.1	Checks before drying process	i) Check conditions of insulation on the conductor and between the windings ii) Check insulation distance between high voltage connection cables and earthed and other live parts iii) Check insulation distance between low voltage connection cables and earthed and other parts iv) Insulation test of core earthing v) Check for proper cleanliness vi) Check tightness of coils i.e. no free movements vii) Certification of all test results
11.1.4.2	Checks during drying process	i) Measurement and recording of temperature and drying time during vacuum treatment. ii) Check for completeness of drying

		iii) Certification of all test result.
11.1.5	Oil	i) As per IS 335 and annexure-D ii) One sample of oil drawn from every lot of transformer offered for inspection should be tested at CPRI/ERDA for tests as listed under table 1 of IS 1866(2000).The cost of this testing should be included within the cost of transformer. Test result shall be confirming to Annexure D of this specification
11.1.6	Test on fittings and accessories	As per manufacturer's standard
11.2	Routine tests/Acceptance tests	The sequence of routine testing shall be as follows i) Visual and dimension check for completely assembled transformer ii) Measurements of voltage ratio iii) Measurements of winding resistance at principal tap and two extreme taps. iv) Vector group and polarity test v) Measurements of insulation resistance and polarization index. vi) Separate source voltage withstand test. vii) Measurements of iron losses and exciting current at rated frequency and 90%, 100% and 110% rated voltage. viii) Induced voltage withstand test. ix) Load losses measurement. x) Impedance measurement at principal tap (HV and LV) of the transformer. xi) Routine test of tanks xii) Induced voltage withstand test (to be Repeated if type tests are conducted). xiii) Measurement of iron loss (to be repeated if type tests are conducted). xiv) Measurement of capacitance and Tan Delta for for transformer winding and HV bushing (including bushing C1 and C2 Values) and Tan Delta for transformer oil (for all transformers). xv) Phase relation test, polarity, angular displacement and phase sequence. xvi) Ratio of HV WTI CT, LV WTI CT and neutral CT xvii) Excitation and knee point voltage test on class PS core of neutral CT. xviii) Routine test on on–load tap changer. xix) IR test from terminals mentioned in Clause no 6.37 xx) Oil leakage test on assembled transformer xxi) Magnetic balance test xxii) Power frequency voltage withstand test on all auxiliary circuits xxiii) Temperature rise test. xxiv) Certification of all test result

		xxv) SFRA xxvi) Aircell charging and discharging test a) Insulation resistance measurement shall be carried out at 5 kV. Value of IR should not be less than 2000M ohms. Polarization index (PI = IR10min/IR1min) should not be less than 1.5 (if one minute IR value is above 5000Mohms and it is not be possible to obtain an accurate 10 minutes reading, in such cases polarization index can be disregarded as a measure of winding condition.) b) Temperature rise test may be necessary to be carried out on 100% of the order quantity at the manufacturer's works or third party lab. c) BSES may appoint recognized testing authority like CPRI /ERDA with their instruments & engineer's team and measure no load loss, load loss and percentage impedance of the transformer at supplier's works at Vendor cost . Bidder shall agree and give them full co-operation during their stay & testing at shop floor. The losses & impedance values so obtained will be considered as final.
11.3	Type tests	On one transformer of each rating and type (In Govt. recognized independent test laboratory / Internationally accredited test lab or at manufacturer's facility if it is approved by component authority. i) Impulse withstand test on all three HV and LV limbs of the transformers for chopped wave as per standard ii) Temperature rise test as per IS iii) Dissolved gas analysis before and after Temperature Rise test to be carried out from CPRI/ERDA iv) Pressure relief device test v) Pressure and Vacuum test on tank(stage inspection)
11.4	Special tests	On one transformer of each rating and type i) Dynamic & Thermal short circuit test short circuit test as per IS ii) Measure of zero seq. impedance (Cl.16.10 IS 2026 part-1) iii) 3) measurement of acoustic noise level (Cl.16.12 IS 2026 part-1) iv) Measurement of harmonic level on no load current v) High voltage withstand test shall be performed on the auxiliary equipment and wiring after complete assembly. vi) CRGO testing for specific core loss, accelerated ageing test, surface insulation resistivity, AC permeability and magnetization, stacking factor, ductility etc

		vii) Oil testing to be tested at CPRI/ERDA labs, whose samples shall be selected & sealed by customer. Cost of such tests, if extra, shall be quoted separately by the bidder.
11.5	In house NABL accreditation	i) Bidder should have in-house NABL accredited testing facility. ii) NABL accreditation certificate to be submitted.
11.6	Note for special tests and type test	Cost of the above tests, if extra, shall be quoted separately by the bidder which shall be considered in the price evaluation.
11.7	Notification to bidders	The product offered must be of type tested design with valid type test report of not more than 5 years. In case the product offered is never type tested for tests as per above list, type tests to be conducted by bidder at his own cost at Govt. recognized independent test laboratory / Internationally accredited test lab or at manufacturer's facility if it is approved by component authority. Valid type test reports for dynamic short circuit test as per IS may be forwarded for customer's review and approval. In case the product offered is never tested for dynamic short circuit the same to be conducted by bidder at his own cost at Govt. recognized independent test laboratory/internationally accredited test lab.
11.7	Site Acceptance test	Following tests shall be conducted at BYPL site/store in presence of BYPL official. i) Insulation Resistance from terminal box mentioned in clause no 6.37. The test shall be conducted on following basis: a) The IR test will be performed on the terminals mentioned in clause no 6.37 on trailer prior to unloading at site. b) The results shall be compared with the results obtained during inspection. c) The IR value in any of the tests (Factory as well as site) should not be less than 2000M Ohm d) To access internal physical damage during transportation, Transformer will not be received if the site results are less than 2000MOhm. ii) SFRA with same kit done at factory (Instrument shall be in Vendors scope iii) Magnetic Balance test iv) Measurement of Voltage ratio v) Measurement of capacitance and Tan Delta for transformer winding and HV bushing (for all

		vi) transformers). vii) Vector Group and Polarity viii) Physical checks ix) Oil BDV Note: Testing instruments shall be in scope of Vendor.

12.0 PACKING, SHIPPING, HANDLING AND STORAGE

12.1	Packing	
12.1.1	Packing protection	Against corrosion, dampness, heavy rains, breakage and vibration.
12.1.2	Packing for accessories and spares	Robust wooden non returnable packing case with all the above protection
12.1.3	Packing details	On each packing case details required as follows i) Individual serial number: ii) Purchaser's name: iii) PO Number: iv) Destination: v) Suppliers name: vi) Name and address of suppliers agent vii) Description and numbers of contents: viii) Manufacturers name: ix) Country of origin;: x) Case measurements: xi) Gross and net weights in kilograms xii) All necessary slinging and stacking instructions.
12.2	Shipping	The bidder shall ascertain at an early date and definitely before the commencement of manufacture, any transport limitations such as weights, dimensions, roads culverts, overhead lines, free access etc. from the manufacturing plant to project site :and furnish to the purchaser confirmation that the proposed packages can be safely transported, as normal or oversize packages up to the plant site. Any modifications required in the infrastructure and cost thereof in this connection shall be brought to the notice of the purchaser.
12.3	Handling and storage	As per manufacturers instruction.

13.0 COMMISIONING SUPPORT

13.1	Commissioning support	Supervision of Erection and Commissioning inclusive of all testing equipments/instruments shall be included for minimum 3 days for each Transformer. It includes following: i) BSES will give vendor 7 days advance notice prior to erection testing and commissioning of Transformer. ii) After successful erection testing and commissioning of Transformer Vendor shall issue erection quality check certificate to BSES.

14.0 TRAINING

14.1	Training at factory and at site after installation	Training on installation, commissioning, operation and maintenance shall be included in the proposal.

15.0 DEVIATIONS

15.1	Deviation	Deviations from this Specification shall be stated in writing with the tender by reference to the Specification clause/GTP/Drawing and a description of the alternative offer. In absence of such a statement, it will be assumed that the bidder complies fully with this specification. No deviation will be acceptable post order.

16.0 DRAWINGS AND DOCUMENTS

Drawing submission shall be as per the matrix given below. All documents/ drawing shall be provided on A3/A4 sheet in box file with separators for each section. PDF shall also be provided of all documents via USB. Deviation sheet and GTP shall be provided in excel sheet.Language of the documents shall be English only. Deficient/ improper document/ drawing submission may liable for rejection.

S.no	Documents to be submitted	With the bid	After Award	
			For Approval	Prior to dispatch
1	Copy of specification along with company seal & signature on each page.	✓	✓	
2	Guaranteed technical particulars	✓	✓	
3	Outine dimension drawing for each major component, general arrangement drawing showing component layout an general schematic diagrams.	✓	✓	
4	Type test certificates, where	✓	✓	

S.no	Documents to be submitted	With the bid	After Award	
			For Approval	Prior to dispatch
	available, and sample routine test reports			
5	Detailed reference list of customers already using equipment offered during the last 5 years with particular emphasis on units of similar design and rating	✓		
6	Details of manufacturers quality assurance standard and programme and ISO 9000 series or equivalent national certification.	✓		
7	Deviations from this specification. Only deviations approved in writing before award of contract shall be accepted.	✓		
8	Recommended spare parts and consumable items for the five years of operation with prices and spare parts catalogue with price list for future requirements.	✓		
9	Transport / shipping dimension and weights, space required for handling parts for maintenance	✓		
10	Write up on oil preservation system.	✓	✓	
11	Write up on OLTC.	✓	✓	
12	Quality assurance program.	✓	✓	
13	Programme for production and testing		✓	
14	General description of the equipment and all components, including brochures		✓	
15	Detailed dimension drawing for all components ,general arrangement drawing showing detailed component layout and detailed schematic and wiring drawings for all components like marshalling box and OLTC drive mechanism box.		✓	
16	Calculations to substantiate choice of electrical, structural, mechanical component size, ratings		✓	
17	Detailed loading drawing to enable the purchaser to design and construct foundations for the transformer.		✓	

S.no	Documents to be submitted	With the bid	After Award	
			For Approval	Prior to dispatch
18	Transport /shipping dimension with weights ,wheel base details, untanking height etc.		✓	
19	Terminal arrangements and cable box details		✓	
20	Flow diagram of cooling system showing no. of cooling banks		✓	
21	Drawings of major components like bushing,CT etc		✓	
22	Valve schedule diagram plate		✓	
23	Instruction plate for flexible separator		✓	
24	Rating and diagram plate with OLTC connection details		✓	
25	Lists of makes of all fittings and accessories		✓	
26	Statement drawing attention to all exposed points in the equipment at which contact with or in close proximity to other metals and stating clearly what protection is employed to prevent corrosion at each point		✓	
27	Detailed installation and commissioning instructions		✓	
28	Inspection and test reports carried out in manufacturers works			✓
29	Test certificates of all bought out items.			✓
30	Operation and maintenance instructions as well as trouble shooting charts.			✓

ANNEXURE – A – SCOPE OF SUPPLY

Design, manufacture, assembly, testing at stages of manufacture as per Cl. 11 of this specification, final testing at manufacturer works on completely assembled transformer before dispatch, packing, transportation, delivery and submission of all documentation for the Power transformer with all accessories as below and ratings & requirements as specified in Annex C.

Sr No	Description	Scope of Supply
1.0	Fully assembled transformer with all major parts like conservator, Radiators, Marshalling box, Protective devices as per Clause 5.0 of this specification, Fittings and accessories as per Clause 6.0 of this specification	YES
1.1	OLTC as per this specification	YES
1.2	RTCC panel as per this specification	No
1.3	HV, LV ,LV NEUTRAL cable boxes	YES
1.4	Support steel material for support of cable boxes from ground	YES
1.5	Foundation Bolts for complete transformer	YES
1.6	Nickel Plated brass double compression weather proof glands for 33kV cables	YES
1.7	Long barrel medium duty Aluminum lugs for power cables	YES
1.8	Nickel Plated brass double compression weatherproof glands and tinned copper lugs for control cable termination in Marshalling box for vendor's cables	YES
1.9	Cables and wires for transformer accessories and internal wiring of marshalling box.	YES
1.10	Touch up paint, minimum 5 liters.	YES
1.11	Extra Transformer oil 10 % in non returnable drums	YES
1.12	One spare complete set of gaskets.	YES
1.13	One set (4 Nos in a set) of anti rolling clamp for 90 lb rail.	YES
1.14	Ordinary thermometers 4 Nos'	YES
1.15	Recommended spares as per manufacturer	YES
2.0	Routine testing as per Clause 11 of this specification	YES
3.0	Type testing as per Clause 11 of this specification	YES
4.0	Special testing as per Clause 11 of this specification	YES
5.0	Submission of Documentation as per clause 16 of this specification	YES

ANNEXURE – B – SERVICE CONDITIONS

1.0	Delhi Atmospheric condition	
1.1	Average grade atmosphere	Heavily polluted, dry
1.2	Maximum altitude above sea level	1000M
1.3	Ambient air temperature	50 deg C
1.4	Relative humidity	90% Max
1.5	Seismic zone	4
1.6	Rainfall	750 mm concentrated in four months

ANNEXURE – C – TECHNICAL PARTICULARS (DATA BY OWNER)

Sr No	Description	Data by Owner	
1.0	Location of equipment	OUTDOOR	
2.0	Reference design ambient temperature	40 deg C	
3.0	Type	Oil immersed, core type, step down	
4.0	Type of cooling	ONAN / ONAF	
5.0	Reference standard	IS: 2026	
6.0	No. of phases	3	
7.0	No. of winding per phase	2	
8.0	Rated frequency (Hz)	50 Hz	
9.0	Rated voltage (kV)		
9.1	HV winding	33	66
9.2	LV winding	11	11
10.0	Vector group reference	Dyn11	Dyn11
11.0	Nominal continuous rating, KVA		
11.1	For 20/25 MVA		
	ONAN	20	20
	ONAF	25	25
11.2	For 25/31.5 MVA		
	ONAN	25	25
	ONAF	31.5	31.5
12.0	Impedance at principal tap at rated frequency with IS tolerance		
12.1	For 20/25 MVA	15% (for 25MVA)	15% (for 25MVA)
12.2	For 25/31.5 MVA	15% (for 31.5MVA)	15% (for 31.5MVA)
13.0	Maximum no load loss at rated condition allowed without any positive tolerance kW		
13.1	For 20/25 MVA	12kW (for 25 MVA),	12kW (for 25 MVA),
13.2	For 25/31.5 MVA	14 kW (for 31.5 MVA)	14 kW (for 31.5 MVA)
14.0	Maximum load loss at rated condition @ 75 deg C and principal tap allowed without any positive tolerance, kW		
14.1	For 20/25 MVA	85 kW (for 25MVA),	85 kW (for 25MVA),
14.2	For 25/31.5 MVA	115 kW (for 31.5 MVA	115 kW (for 31.5 MVA

15.0	Terminal connection / cable / conductor size		
15.1	HV side	33kV	66 kV
		By 2 runs of 3C X400sq mm A2XFY ,33kV(E) grade cable for 20/25 MVA.	By single /Double ACSR “ZEBRA” conductor per phase
15.2	LV side	1) By 3 runs of 1C x 1000 sqmm per phase A2XY unarmoured cable 11 kV (E) grade cable (For 25MVA) 2) By 4 runs of 1C x 1000 sqmm per phase A2XY unarmoured cable 11 kV (E) grade cable (For 31.5MVA)	
15.3	LV neutral	By G .S. strip mim 2x75x10 mm size	By G.S. strip min 2x75x10 mm size
16.0	Highest system voltage HV side, kV	36	72.5
17.0	Highest system voltage LV side, kV	12	12
18.0	Lightning impulse withstand voltage, kV peak		
18.1	For nominal system voltage of 11 kV	75	
18.2	For nominal system voltage of 33 kV	170	
18.3	For nominal system voltage of 66 kV	325	
19.0	Power frequency withstand voltage kV rms		
19.1	For nominal system voltage of 11 kV	28	
19.2	For nominal system voltage of 33 kV	70	
19.3	For nominal system voltage of 66 kV	140	
20.0	Clearances phase to phase, mm		
20.1	For nominal system voltage of 11 kV	280	
20.2	For nominal system voltage of 33 kV	350	
20.3	For nominal system voltage of 66 kV	700	
21.0	Clearances phase to earth, mm		
21.1	For nominal system voltage of 11 kV	140	
21.2	For nominal system	320	

	voltage of 33 kV	
21.3	For nominal system voltage of 66 kV	660
21.4	Ground clearance – Live part to ground for 66kV – mm	4000
22.0	System fault level, HV side	1500 MVA for 33 kV 3600 MVA for 66 kV
23.0	System fault level, LV side	500 MVA for 11 kV
24.0	Short circuit withstand capacity of the transformer	
24.1	Three phases dead short circuit at secondary terminal with rated voltage maintained on the other side	For 3 secs.
24.2	Single phase short circuit at secondary terminal with rated voltage maintained on the other side	For 3 secs.
25.0	System earthing	
25.1	HV	Solidly earthed
25.2	LV	Solidly earthed
26.0	Overload capability	As per IS 2026 part 7
27.0	Noise level	Shall not exceed limit as per NEMA TR- 1 with all accessories running measured as per IEC 551 / NEMA standard
28.0	Radio influence voltage	Maximum 250 microvolt
29.0	Harmonic suppression	Transformer to be designed for suppression of 3rd, 5th, 7th harmonic voltage and high frequency disturbances
30.0	Partial discharge	10 Pico C
31.0	Temperature rise of top oil by thermometer	40 deg C
32.0	Temperature rise of winding by resistance	45 deg C
33.0	Note for the bidders	(left blank)
34.0	Tapping to be provided on HV winding for OLTC	For 33/11 kV & 66/11kVTransformer +10% to -10% @step of 1.25 % 16 taps, 17 tap positions
35.0	Maximum flux density allowed in the core extreme over excitation /over	1.9 Tesla

	fluxing, Tesla	
36.0	Maximum current density allowed	3.0 Amperes per sqmm @ lowest tap.
37.0	AVR input voltage/ Auxiliary supply	Not applicable
38.0	Bushing parameters	
38.1	Rated Current for 20/25 MVA Xmer	1000 A for 33 kV bushing 2000 A for 11kV bushing
38.2	Creepage factor for all bushing mm /KV	31 mm / kV minimum
38.3	Rated thermal short time current for all bushing	25 times rated current for 2 secs
38.4	Angle of mounting	0 to 90 degree
38.5	Cantilever withstand load	for 33 kV bushing- as per std. vendor 2000N for 11kV bushing
38.6	Overall Length (Approx)	for 33 kV bushing- as per std. vendor 503 mm for 11 kV bushing
38.7	Diameter of base	100 mm

ANNEXURE – D – TECHNICAL SPECIFICATION FOR TRANSFORMER OIL

Codes and standards

Latest revision of following codes and standards with all amendments-

Cl no.	Standard no	Title
1.1	IS 335	New insulating oils
1.2	IS1783	Drums for oils

2.0 Properties

Sr No	Item description	Specification requirement
2.1	**Function**	
2.1.1	Viscosity	
2.1.1.1	Viscosity at 40^0C	15 mm^2/s, Max
2.1.1.2	Viscosity at 0^0C	1800 mm^2/s, Max
2.1.2	Pour Point	- 10^0C, Max
2.1.3	Water content	30 mg/Kg, Max
2.1.4	Breakdown voltage	
2.1.4.1	New unfiltered oil	30 kV, Min
2.1.4.2	After filtration	70 kV, Min
2.1.5	Density at 20^0C	0.895 g/ml, Max
2.1.6	Dielectric dissipation factor at 90^0C	0.005, Max
2.1.7	Particle Content	Manufacturer to specify the data
2.2	**Refining/Stability**	
2.2.1	Appearance of oil	Clear, free from sediment and suspended matter
2.2.2	Acidity	0.01 mg KOH/g, Max
2.2.3	Interfacial tension at 27^0C	0.04 N/m, Min
2.2.4	Total sulphur content	Manufacturer to specify the data
2.2.5	Corrosive sulfur	Not-corrosive
2.2.6	Potentially Corrosive sulfur	Not-corrosive
2.2.7	DBDS	Not detectable (<5 mg/kg)
2.2.8	Inhibitor	Not detectable (<0.01%)
2.2.9	Metal Passivator	Not detectable (<5 mg/kg)
2.2.10	Other additives	Manufacturer to specify the data
2.2.11	2-furfural and related Compounds content	Not detectable (<0.05 mg/kg) for each individual compound
2.3	**Performance**	
2.3.1	Oxidation stability, test duration 164 h	
2.3.1.1	Total acidity	1.2 mg KOH/g, Max
2.3.1.2	Sludge	0.8%, Max
2.3.1.3	DDF at 90^0C	0.5, Max
2.3.2	Gassing Tendency	Manufacturer to specify the data
2.3.3	ECT	Manufacturer to specify the data

2.4	**Health,safety and Environment**	
2.4.1	Flash point	135^0C, Min
2.4.2	PCA content Max	3%, Max
2.4.3	PCB content	Not detectable (<2 mg/Kg)

ANNEXURE – E – SPECIFICATION FOR NITROGEN INJECTION FIRE PROTECTION SYSTEM

1.0.0 SUPPLY AND SCOPE WORK

Design, manufacture, testing of the assembled system at manufacturer's works before dispatch, packing and supply at site, erection and commissioning of the Nitrogen Injection Fire Protection system

Installation testing and commissioning of Nitrogen Injection Fire Protection system shall be in scope of bidder. All material including Pipes, ducts control cables, tools, tackles, hardware, testing equipments and manpower required for the work shall be in scope of bidder except for any type of civil work like fire wall, soak pit etc. Bidder if feels shall conduct physical survey of the power transformer to check feasibility and quantum of work involved.

2.0.0 INTRODUCTION

Nitrogen Injection Fire Protection System (NIFPS) shall use nitrogen as fire quenching medium. The protective system shall prevent transformer / Reactor oil tank explosion and possible fire in case of internal faults. In the event of fire by external causes such as bushing fire, OLTC fires, fire from surrounding equipment etc, it shall act as a fast and effective fire fighter without any manual intervention. It shall accomplish its role as fire preventer and extinguisher without employing water and / or carbon dioxide.

Fire shall be extinguished within 3 minutes (Maximum) of system activation and within 30 seconds (maximum) of commencement of nitrogen injection.

3.0.0 APPLICABLE CODES AND STANDARDS

The design and installation of the complete fire protection system shall comply with the latest applicable Indian standards

a) IS 10028 (Part II) : Code of practice for selection, installation, and maintenance of transformer

b) Tariff Advisory Committee : Regulations for the electrical equipment of buildings

c) National fire Codes 1993 of National Fire Protection Association (NFPA) USA

d) Central Electricity Authority, The Gazette of India, Extraordinary 2010 : Safety provisions for electrical installations and apparatus of voltage exceeding 650V

4.0.0 ACTIVATION OF THE FIRE PROTECTIVE SYSTEM

Mal-functioning of fire prevention / extinguishing system could lead to interruption in power supply. The supplier shall ensure that the probability of chances of malfunctioning of the fire protective system is practically zero. To achieve this objective, the supplier shall plan out his scheme of activating signals which should not be too

complicated to make the fire protective system inoperative in case of actual need and should not be dependent on auxiliary power source. The system shall be provided with automatic control for fire prevention and fire extinction without any manual intervention. Besides automatic control, remote electrical push button control at Control box and local manual control in the fire extinguishing cubicle shall also be provided. The following electrical-signals shall be required for activating the fire protective system under prevention mode / fire extinguishing mode.

4.1.0 Auto Mode

4.1.1 For prevention of fire :
Differential relay operation + Buchholz relay paralleled with pressure relief valve or RPRR (Rapid Pressure Rise Relay) + Tripping of all or one circuit breakers (on HV & LV/IV side) associated with transformer / reactor is the pre-requisite for activation of system. The system shall have sufficient Input modules.

4.1.2 For extinguishing fire :
Fire detector + Buchholz relay paralleled with pressure relief valve (PRV) or sudden pressure relay (SPR) + tripping of all circuit breakers (on HV & LV/IV side) associated with transformer / reactor is the pre-requisite for activation of system.

4.2.0 Manual Mode (Local / Remote electrical)

Tripping of all circuit breakers (on HV & LV/IV side) associated with transformer/reactor is the pre-requisite for activation of system.

4.3.0 Manual Mode (Mechanical)

Tripping of all circuit breakers (on HV & LV/IV side) associated with transformer / Reactor is the pre-requisite for activation of system.
The system shall be designed to be operated manually in case of failure of power supply to fire protection system.

5.0.0 GENERAL DESCRIPTION

Nitrogen injection fire protection system should be a dedicated system for each oil filled transformer / reactor. It should have a Fire Extinguishing Cubicle (FEC) placed on a plinth at 5-7m away (as per statutory requirement) from transformer / reactor or placed next to the fire wall if fire wall exists. The FEC shall be connected to the top of transformer / reactor oil tank for depressurization of tank and to the oil pit as per Indian standard and CBIP from its bottom through oil pipes. The fire extinguishing cubicle should house a pressurized nitrogen cylinder(s) which is connected to the oil tank of transformer/reactor oil tank at bottom. The Transformer Conservator Isolation Valve (TCIV) is fitted between the conservator tank and Buchholz relay.

Cable connections are to be provided from signal box to the control box in the control room, control box to fire extinguishing cubicle, TCIV to signal box and any other wiring to ensure proper functioning of the fire protection system. Fire detectors placed on the top of transformer/reactor tank are to be connected in parallel to the signal box by Fire survival cables. Control box is also to be connected to relay panel in control room for

receiving system activation signals. All panel or control equipments shall be fire proof so as to ensure that they do not fail themselves in event of fire.

6.0.0 OPERATION

On receipt of all activating signals, the system shall drain pre-determined volume of hot oil from the top of tank (i.e top oil layer), through outlet valve, to reduce tank pressure by removing top oil and simultaneously injecting nitrogen gas at high pressure for stirring the oil at pre-fixed rate and thus bringing the temperature of top oil layer down. Transformer conservator isolation valve blocks the flow of oil from conservator tank in case of tank rupture / explosion or bushing bursting. Nitrogen occupies the space created by oil drained out and acts as an insulating layer over oil in the tank and thus preventing aggravation of fire.

7.0.0 SYSTEM COMPONENTS

Nitrogen injection fire protection system shall broadly consist of the following components. However, all other components which are necessary for fast reliable and effective working of the fire protective system shall be deemed to be included in the scope of supply.

7.1.0 Fire Extinguishing Cubicle (FEC)

The FEC shall be made of CRCA sheet of 3 mm (minimum) thick complete with the base frame, painted inside and outside with post office red colour (shade 538 of IS-5).It shall have hinged split doors fitted with high quality tamper proof lock. The degree of protection shall be IP55. The following items shall be provided in the FEC.

a. Nitrogen gas cylinder with regulator and falling pressure electrical contact manometer
b. Oil drain pipe with mechanical quick drain valve.
c. Control equipment for draining of oil of pre-determined volume and injecting regulated volume of nitrogen gas
d. Pressure monitoring switch for back-up protection for nitrogen release
e. Limit switches for monitoring of the system
f. Butterfly valve with flanges on the top of panel for connecting oil drain pipe and nitrogen injection pipes for transformer/reactors
g. Panel lighting (CFL Type)
h. Oil drain pipe extension of suitable sizes for connecting pipes to oil pit.

7.2.0 Control box

Control box is to be placed in the control room for monitoring system operation, automatic control and remote operation. Control supply will be 50/220VDC (15% tolerance) based on site requirement. The following alarms, indications, switches, push buttons, audio signal etc. shall be provided.

a. System on
b. TCIV open
c. Oil drain valve closed
d. Gas inlet valve closed
e. TCIV closed*

f. Fire detector trip *
g. Buchholz relay trip
h. Oil drain valve open*
i. Extinction in progress *
j. Cylinder pressure low *
k. Differential relay trip
l. PRV / SPR trip
m . Master relay of Transformer/reactor trip
n. System out of service *
o. Fault in cable connecting fault fire detector
p. Fault in cable connecting differential relay
q. Fault in cable connecting Buchholz relay
r. Fault in cable connecting PRV / SPR
s. Fault in cable connecting transformer /reactor trip
t. Fault in cable connecting TCIV
u. Auto/ Manual / Off
v. Extinction release on / off
w. Lamp test
x. Visual/ Audio alarm*
y. Visual/ Audio alarm for DC supply fail *

Suitable provision shall be made in the control box, for monitoring of the system from remote substation using the substation automation system.

7.3.0 Transformer Conservator Isolation Valve

Transformer conservator isolation valve (TCIV) to be fitted in the conservator pipe line, between conservator and buchholz relay which shall operate for isolating the conservator during abnormal flow of oil due to rupture / explosion of tank or bursting of bushing. The valve shall not isolate conservator during normal flow of oil during filtration or filling or refilling, locking plates to be provided with handle for pad locking. It shall have proximity switch for remote alarm and indication glass window for visual inspection for physical checking of the status of valve.

The TCIV should be of the best quality as malfunctioning of TCIV could lead to serious consequence. The closing of TCIV means stoppage of breathing of transformer/reactor. Fire survival cable connecting TCIV shall be terminated in transformer marshalling box.

7.4.0 Fire detectors

The system shall be complete with adequate number of fire detectors (quartz bulb) fitted on the top cover of the transformer / reactor oil tank. The system generates signal after sensing higher temperature. The placing of fire detectors and numbers shall be designed and finalized by bidder as per requirement.

7.5.0 Signal box

It shall be mounted away from transformer / reactor main tank, preferably near the transformer marshalling box, for terminating cable connections from TCIV & firedetectors and for further connection to the control box. The degree of protection shall be IP55.

7.6.0 Cables

Fire survival cables (capable to withstand 750° C.) of 4 core x 1.5 sq. mm size for connection of fire detectors in parallel shall be used. The fire survival cable shall conform to BS 7629-1, BS 8434-1, BS 7629-1 and BS 5839-1,BS EN 50267-2-1 or relevant Indian standards.

Fire Retardant Low Smoke (FRLS) cable of 12 core x 1.5 sq. mm size shall be used for connection of signal box / marshalling box near transformer/reactor and FEC mounted near transformer/reactor with control box mounted in control room.

Fire Retardant Low Smoke (FRLS) cable of 4 core x 1.5 sq. mm size shall be used for connection between control box to DC and AC supply source, fire extinguishing cubicle to AC supply source, signal box/ marshalling box to transformer conservator isolation valve connection on transformer/reactor.

7.7.0 Pipes

Heavy duty pipe connecting the transformer/reactor tank for oil rain, and for nitrogen injection shall be provided. Pipes connecting oil tank laid underground, shall be preferably be used for interconnection. Pipes, complete with connections, flanges, bends and tees etc. shall be supplied along with the system.

7.8.0 Other items

7.8.1 Oil drain and nitrogen injection openings with gate valves on transformer / reactor tank at suitable locations.

7.8.2 Flanges with dummy piece in conservator pipe between Buchholz relay and conservator Tank for fixing TCIV.

7.8.3 Fire detector brackets on transformer / reactor tank top cover.

7.8.4 Spare potential free contacts for activating the system i.e. in differential relay, Buchholz relay, Pressure Relief Device / RPRR, Circuit Breaker of transformer/reactor

7.8.5 Pipe connections between transformer / reactor and FEC and between FEC and oil pit required for collecting top oil.

7.8.6 Cabling for fire detectors mounted on transformer /reactor top cover

7.8.7 Inter cabling between signal box, control box and Fire Extinguishing Cubicle (FEC).
All external cables from / to the system i.e. signal box to control box and control box to FEC shall be provided by the purchaser. All internal cables within the system i.e. between detectors / signal box / marshalling box / FEC / TCIV shall be in the scope of NIFPS supplier.

7.8.8 Butterfly valves /Gate valves on oil drain pipe and nitrogen injection pipe which should be able to withstand full vacuum.

7.8.9 Supports, signal box etc. which are to be painted with enamelled paint.

7.8.9 The doors, removable covers and panels shall be gasketted all round with neoprene gaskets.

8.0.0 MANDATORY SPARES

Cylinder filled with Nitrogen of required capacity per substation	1 No.
Fire Detectors per transformer	3 No's.
Regulator assembly per sub-station	1 No.

9.0.0 TESTS

Reports of all type test conducted as per relevant IS/IEC standards in respect of various bought out items including test reports for degree of protection for FEC /control box / signal box shall be submitted by the supplier.

The supplier shall demonstrate the functional test associated with the following:

- Fire Extinguishing Cubicle, Control Box.
- Fire Detector.
- Transformer Conservator Isolation Valve

The performance test of the complete system shall be carried out after erection of the system with transformer at site.

10.0.0 DOCUMENTS TO BE SUBMITTED

10.1.0 To be submitted along with offer

10.1.1 General outline of the system.
10.1.2 Detailed write-up on operation of the offered protection system including maintenance and testing aspects / schedules.
10.1.3 Technical Data particulars (GTP), the format of which is attached in Annexure A of the specification
10.1.4 Data regarding previous supplies, date of commissioning, performance feedback etc.
10.1.5 Document related to Type test / proof of design as required by statutory body / electrical inspector

10.2.0 To be submitted after award of contract:

Detailed dimensional layout drawing of the system with complete bill of materials, clearances from ground and other live points, details of detectors, equipment layout drawings, detailed drawings pertaining to signal box, control box, FEC equipment, wiring and schemes, 4 sets of testing, commissioning, Operation and Maintenance manual along with soft copies (in CDs) shall be submitted by the supplier.

11.0.0 PACKING, SHIPPING, HANDLING & SITE SUPPORT

11.1.0	Packing Protection	The packing shall be fit to withstand rough handling during transit and storage at destination. The test set should be properly protected against corrosion, dampness & damage.

11.2.0	Packing for accessories and spares	Robust non-returnable packing case with all the above protection & identification Label. Thebidder should get the packing list approved before dispatching the material.
11.3.0	Packing Identification Label	On each packing case, following details are required:
11.3.1	Individual serial number	
11.3.2	Purchaser's name	
11.3.3	PO number (along with SAP item code, if any) & date	
11.3.4	Equipment Tag no. (if any)	
11.3.5	Destination	
11.3.6	Manufacturer / Supplier's name	
11.3.7	Address of Manufacturer / Supplier / it's agent	
11.3.8	Description	
11.3.9	Country of origin	
11.3.10	Month & year of Manufacturing	
11.3.11	Case measurements	
11.3.12	Gross and net weight	
11.3.13	All necessary slinging and stacking instructions	
11.4.0	Shipping	The seller shall be responsible for all transit damage due to improper packing.
11.5.0	Handling and Storage	Manufacturer instruction shall be followed.
11.6.0	Detail handling & storage instruction sheet / manual to be furnished before commencement of supply.	

12.0.0 DEVIATIONS

List of deviations shall be stated in writing with the tender by reference to the Specification clause / GTP/ Drawing. In absence of such a statement, requirements of the Specification shall be assumed to be met without exception by the bidder.

ANNEXURE – F – SPECIFICATION FOR SILICAL GEL BREATHER

This specification is intended to cover the manufacturing, testing at manufacturer's works, supply and delivery of "Silica Gel Breather" to the purchaser.

1.0 Scope of Supply

Silica Gel Breather shall be as per REL specification suitable for use in Power Transformer (Main
Tank conservator & OLTC conservator) & for Distribution Transformer (Tank Conservator)

2.0 General

Silica Gel Breather offered by seller shall be suitable for continuous operation of prevailing climatic conditions as mentioned in Annexure –B

3.0 Specific Requirement

3.1 Breather

1.	Body	Aluminium pressure die caste Short Blasted & Powder Coated
2.	Container	Polycarbonate : 143R grade
3.	Oil Cup	Polycarbonate : 143R grade
4.	Gasket	Nitrile cork rubber for main body & oil cup gasket
5.	Silica Gel	Round ball type of size 2-5 mm (deep Blue)
6.	Paint	Powder Coated
7.	Mounting	Threaded for existing Transformers. Flanged type for New Transformers
8.	Hardware	Stainless Steel
9.	Flange Type, Size & hardware	Flange should be of circular shape with diameter of & with hardware of M10 bolts.

3.2 The indicating grade of Silica Gel, which shall be filled in the breather, is hard Blue Round Ball with considerable absorption power of moisture & hence signaling the saturation degree by changing colour (from Blue to Pink).

3.3 The breather shall have clear visibility of Gel colour & of oil level with dust particles in the oil cup from distance.

3.4 Breather should breathe only from the inlet holes provided for breathing. Air should not enter anywhere from the body of breather.

3.5 Silica Seal shall be applied on gasket for better air tightening.

3.6 Gel removing & refilling method is specially designed to avoid skilled labour requirement at site & consequent air leakages.

3.7 Oil filling indicator on oil cup.

3.8 Application

Transformer Size	Rating	Silica Gel Quantity in KG	
		Main Tank Conservator	OLTC Conservator
Power Transformer	20 & 31.5 MVA	5.0 Kg	1.0 Kg

3.9 Silica Gel

Sl. No	Properties	Requirement
1	Particle Size	Round ball type of size 2.5 mm (deep Blue)
2	Bulk Density	570-700 g/l
3	Moisture Adsorption Capacity 1. R.H. = 100% 2. R.H. = 50% 3. R.H. = 40% 4. R.H. = 20%	25 % (min)
4	Appearance	99.5% (min)
5	Friability	99.5% (min)
6	Chlorides percent by mass (max)	0.04%
7	Sulphates percent by mass (max)	0.5%
8	Cobalt percent by mass (max)	0.5%
9	Ammonium Compounds by mass (max)	0.001%
10	Loss on drying	4% (max)
11	pH of Aqueous extract	5-6.5%
12	Loss on Attrition	< 2.5 %

4.0 Marking

A Sticker label Indicating manufacturer's Name, Sr. No. Gel capacity etc. shall be provided at suitable place. Container may also marked with the Standard mark.

5.0 Testing

Breather container shall be suitably blanked & pressure tested with air at 0.35 Kg/cm for 30 minutes. There shall not be any leakages from gasketted joints. Test certificates from accredited laboratory shall be submitted.

6.0 Prototype

Before starting manufacture of the quantity ordered, the successful bidder shall submit a prototype for approval. Unless the prototype is inspected and approved, manufacturing shall not be started. The necessity of submitting prototype shall be ascertained before starting of manufacturing.

7.0 Packing & Keeping Quality

The material shall be packed in clean, dry & air tight container. The material stored in original air tight containers shall continue to satisfy all the properties of Silica Gel for not less than 6 months from date of packing.

8.0 Compliance Status / Deviation

Bidder shall indicate compliance status for every requirement & feature, on the right hand side margin of the specification.

9.0 Documents Comprising The Bid

The bidder shall complete the bid proposal sheets inclusive of copy of the specification duly filled in with compliance status, quality & operational manuals, Test certificates etc.

Indicating the material to be supplied, a brief description of the goods, their quantity and prices. In absence of these documents, the offer shall be considered incomplete & may be rejected.

ANNEXURE – G – MANUFACTURING QUALITY ASSURANCE PLAN

SL NO	COMPONENT & CHARACTRISTICS	CLASS	TYPE OF CHECK	QUALITY OF CHECK	REFERENCE DOCUMENT	ACCEPTANCE NORMS	FORMAT OF RECORD	AGENCY			REMARKS
								S	M	O	
1	2	3	4	5	6	7	8	9			10
A	**RAW Material**										
1	**Winding Conductor (PICC)**										
1.1	Bare Dimensions & Finish of Conductor	Major	Measurement	1 sample per size per lot	MFR. STD / IS 13730 Part 27	MFR. STD / IS 13730 Part 27	Supplier's TC	P	V	R	
1.2	Increase in dimensions due to Paper covering	Major	Measurement	-DO-	-DO-	-DO-	-DO-	P	V	R	
1.3	Resistivity @ 20°C	Major	Electrical	-DO-	-DO-	-DO-	-DO-	P	V	R	
1.4	No of Layers	Critical	Measurement	-DO-	-DO-	-DO-	-DO-	P	V	R	
1.5	Conductor Tensile strength	Critical	Mechanical	-DO-	-DO-	-DO-	-DO-	P	V	R	
1.6	Conductor Elongation	Critical	Mechanical	-DO-	-DO-	-DO-	-DO-	P	V	R	
1.7	% Overlap of Paper	Critical	Mechanical	-DO-	-DO-	-DO-	-DO-	P	V	R	
1.8	Corner Radius	Critical	Mechanical	-DO-	-DO-	-DO-	-DO-	P	V	R	
1.9	**Kraft Paper Insulation**										
1.9.1	Thickness	Major	Measurement	1 sample per size per lot	MFR. STD/ IEC 60554	MFR. STD/ IEC 60554	Supplier's TC	P	V	R	
1.9.2	Apparent Density	Major	Chemical	-DO-	-DO-	-DO-	-DO-	P	V	R	

SL NO	COMPONENT & CHARACTRISTICS	CLASS	TYPE OF CHECK	QUALITY OF CHECK	REFERENCE DOCUMENT	ACCEPTANCE NORMS	FORMAT OF RECORD	AGENCY			REMARKS
								S	M	O	
1	2	3	4	5	6	7	8	9			10
1.9.3	Air Permeability	Major	Chemical	-DO-	-DO-	-DO-	-DO-	P	V	R	
1.9.4	Tensile Index (Longitudinal and Transverse)	Major	Mechanical	-DO-	-DO-	-DO-	-DO-	P	V	R	
1.9.5	Electrical Strength in Air	Major	Electrical	-DO-	-DO-	-DO-	-DO-	P	V	R	
1.9.6	Ash Content	Major	Chemical	-DO-	-DO-	-DO-	-DO-	P	V	R	
1.9.7	pH of 5% Aqueous Extract	Major	Chemical	-DO-	-DO-	-DO-	-DO-	P	V	R	
1.9.8	Conductivity of 5% Aqueous Extract	Critical	Chemical	-DO-	-DO-	-DO-	-DO-	P	V	R	
1.9.9	Moisture Content	Major	Chemical	-DO-	-DO-	-DO-	-DO-	P	V	R	
1.9.10	Heat Stability	Major	Chemical	-DO-	-DO-	-DO-	-DO-	P	V	R	
1.9.11	Degree of Polymerization	Major	Chemical	-DO-	-DO-	-DO-	-DO-	P	V	R	
1.9.12	Elongation (MD & CMD)	Major	Mechanical	-DO-	-DO-	-DO-	-DO-	P	V	R	
1.9.13	Tear index	Major	Mechanical	-DO-	-DO-	-DO-	-DO-	P	V	R	
2.0	**CRGO Laminations (Watt absorption)**										
2.1	Specific Core Loss	Major	Electrical	Random	MFR. STD/IS 3024	MFR. STD/IS 3024	Supplier's TC	P	V	R	
2.2	Surface Insulation resistance	Major	Electrical	-DO-	-DO-	-DO-	-DO-	P	V	R	

SL NO	COMPONENT & CHARACTRISTICS	CLASS	TYPE OF CHECK	QUALITY OF CHECK	REFERENCE DOCUMENT	ACCEPTANCE NORMS	FORMAT OF RECORD	AGENCY			REMARKS
								S	M	O	
1	2	3	4	5	6	7	8	9			10
2.3	Ageing Test	Major	Measurement	-DO-	-DO-	-DO-	-DO-	P	V	R	
2.4	Stacking Factor	Major	Measurement	-DO-	-DO-	-DO-	-DO-	P	V	R	
2.5	Waviness	Major	Measurement	-DO-	-DO-	-DO-	-DO-	P	V	R	
2.6	Edge Burr	Major	Visual	-DO-	-DO-	-DO-	-DO-	P	V	R	
2.7	Sample testing for Checking Specific Core loss, accelerated ageing test, Surface insulation resistivity, AC permeability and magnetization, stacking factor, Ductility	Major	Electrical	**100%**	MFR. STD/IS 3024	MFR. STD/IS 3024	--	--	P	**W**	Sample will be randomly selected by BSES & will be send for testing at CPRI/ERDA lab.
3.0	**Un-impregnated Laminated Wood**										
3.1	Thickness	Major	Visual	1 sample size / LOT	MFR.D STD/ IEC 61061	MFR.D STD/IEC 61061	Supplier's TC	P	V	R	
3.2	Density	Major	Chemical	-DO-	-DO-	-DO-	-DO-	P	V	R	
3.3	Moisture Content	Major	Chemical	-DO-	-DO-	-DO-	-DO-	P	V	R	
3.4	Oil Absorption	Major	Chemical	-DO-	-DO-	-DO-	-DO-	P	V	R	
3.5	Cross breaking strength	Major	Mechanical	-DO-	-DO-	-DO-	-DO-	P	V	R	
3.6	Compressive Strength	Major	Mechanical	-DO-	-DO-	-DO-	-DO-	P	V	R	

SL NO	COMPONENT & CHARACTRISTICS	CLASS	TYPE OF CHECK	QUALITY OF CHECK	REFERENCE DOCUMENT	ACCEPTANCE NORMS	FORMAT OF RECORD	AGENCY			REMARKS
								S	M	O	
1	2	3	4	5	6	7	8	9			10
3.7	Electric Strength in Oil	Major	Electrical	-DO-	-DO-	-DO-	-DO-	P	V	R	
3.8	Shrinkage in oil	Major	Mechanical	-DO-	-DO-	-DO-	-DO-	P	V	R	
3.9	Tensile Strength	Major	Mechanical	-DO-	-DO-	-DO-	-DO-	P	V	R	
4.0	**Press Boards (Pre-compressed)**										
4.1	Thickness	Major	Measurement	1 sample/Size/LOT	MFR. STD/ IEC 60641	MFR. STD/ IEC 60641	Supplier's TC	P	V	R	
4.2	Tensile Strength (MD & CMD)	Major	Mechanical	-DO-	-DO-	-DO-	-DO-	P	V	R	
4.3	Shrinkage in Air (MD & CMD)	Major	Mechanical	-DO-	-DO-	-DO-	-DO-	P	V	R	
4.4	Moisture Content	Major	Chemical	-DO-	-DO-	-DO-	-DO-	P	V	R	
4.5	Oil Absorption	Major	Chemical	-DO-	-DO-	-DO-	-DO-	P	V	R	
4.6	Electrical Strength in Oil and air	Major	Electrical	-DO-	-DO-	-DO-	-DO-	P	V	R	
4.7	pH of 5% aqueous extract	Major	Chemical	-DO-	-DO-	-DO-	-DO-	P	V	R	
4.8	Conductivity of 5% aqueous extract	Major	Chemical	-DO-	-DO-	-DO-	-DO-	P	V	R	
4.9	Compressibility	Major	Mechanical	-DO-	-DO-	-DO-	-DO-	P	V	R	
4.10	Ash Content	Major	Chemical	-DO-	-DO-	-DO-	-DO-	P	V	R	

SL NO	COMPONENT & CHARACTRISTICS	CLASS	TYPE OF CHECK	QUALITY OF CHECK	REFERENCE DOCUMENT	ACCEPTANCE NORMS	FORMAT OF RECORD	AGENCY			REMARKS
								S	M	O	
1	2	3	4	5	6	7	8	9			10
4.11	Apparent density	Major	Chemical	-DO-	-DO-	-DO-	-DO-	P	V	R	
4.12	Elongation (MD & CMD)	Major	Mechanical	-DO-	-DO-	-DO-	-DO-	P	V	R	
5.0	**Tank and its accessories**										
5.1	Structural steel										
5.1.1	Thickness	Major	Measurement	Random	MFR. STD / IS 2062	MFR. STD / IS 2062	Suppliers TC	P	V	R	
5.1.2	Yield Strength	Major	Mechanical	-DO-	-DO-	-DO-	-DO-	P	V	R	
5.1.3	Tensile Strength	Major	Mechanical	-DO-	-DO-	-DO-	-DO-	P	V	R	
5.1.4	Elongation	Major	Mechanical	-DO-	-DO-	-DO-	-DO-	P	V	R	
5.1.5	Bend test	Major	Mechanical	-DO-	-DO-	-DO-	-DO-	P	V	R	
5.2	**Manufacturing of Tank and acc.**										
5.2.1	Dimension check	Major	Measurement	100%	MFR. Spec/ DRG	MFR. Spec/ DRG	MFR. Fabrication report	P	W	R	
5.2.2	Joint preparation	Major	Measurement	100%	-DO-	-DO-	-DO-	P	V	R	
5.2.3	Assembly and alignment	Major	Visual and measurement	100%	MFR. Spec/ DRG	MFR. Spec/ DRG	MFR. Fabrication report	P	V	R	
5.2.4	DP Test on Welds on	Major	DP Test	100%	-DO-	-DO-	-DO-	P	W	R	

SL NO	COMPONENT & CHARACTRISTICS	CLASS	TYPE OF CHECK	QUALITY OF CHECK	REFERENCE DOCUMENT	ACCEPTANCE NORMS	FORMAT OF RECORD	AGENCY			REMARKS
								S	M	O	
1	2	3	4	5	6	7	8	9			10
	Load bearing members eg. Jack Pads										
5.2.5	Pressure test	Major	Mechanical	On One unit	CBIP	CBIP	Test Report	--	P	W	**STAGE INSPECTION**
5.2.6	Vacuum test	Major	Mechanical	On One unit	CBIP	CBIP	Test Report	--	P	W	**STAGE INSPECTION**
5.2.7	Leakage test										
5.2.7.1	Main Unit	Major	Mechanical	100%	MFR. STD	MFR. STD	Test report	P	W	R	
5.2.7.2	Conservator	Major	Mechanical	100%	MFR. STD	MFR. STD	Test report	P	W	R	
5.2.7.3	Pipes	Major	Mechanical	100%	MFR. STD	MFR. STD	Test report	P	W	R	
5.2.8	Surface preparation	Major	Visual	100%	MFR. STD	MFR. STD	MFR. Fabrication report	P	V	R	
5.2.9	Final Paint Coat (including Primer), Thickness & Shade	Major	Measurement	100%	MFR. STD	MFR. STD	Test report	P	V	R	
5.2.10	Paint Peel off test	Major	Visual	100%	MFR. STD	MFR. STD	Test report	--	P	R	
6.0	**Porcelain insulators**										
6.1	Make and rating	Critical	Visual	100%	IS 8603/IS 2099/App.Drg.	IS 8603/IS 2099/App.Drg.	Supplier's TC	P	V	R	
6.2	Visual inspection for surface smoothness, any	Critical	Visual	100%	-DO-	-DO-	-DO-	P	V	R	

SL NO	COMPONENT & CHARACTRISTICS	CLASS	TYPE OF CHECK	QUALITY OF CHECK	REFERENCE DOCUMENT	ACCEPTANCE NORMS	FORMAT OF RECORD	AGENCY			REMARKS
								S	M	O	
1	2	3	4	5	6	7	8	9			10
	damage, etc.										
6.3	Important dimension including Creepage distance	Major	Measurement	One sample /size / lot	-DO-	-DO-	-DO-	P	V	R	
6.4	All Routine electrical tests	Major	Electrical	100%	-DO-	-DO-	-DO-	P	V	R	
7.0	**Magnetic Oil Gauge**										
7.1	Make and dimensions	Major	Physical	100%	App.Drg./ Supplier Catalogue	App.Drg./ Supplier Catalogue	Supplier's TC	P	V	R	
7.2	Test for level (eg at 30° Max)	Major	Mechanical	100%	-DO-	-DO-	-DO-	P	V	R	
7.3	Switch contact test	Major	Electrical	100%	-DO-	-DO-	-DO-	P	V	R	
7.4	Leakage test	Major	Mechanical	100%	-DO-	-DO-	-DO-	P	V	R	
7.5	Switch operating and setting	Major	Electrical	100%	-DO-	-DO-	-DO-	P	V	R	
7.6	Di-electric test at 2 KV AC between live terminal and body	Major	Electrical	100%	-DO-	-DO-	-DO-	P	V	R	
8.	**Buchholz relay**										
8.1	Make and type	Critical	Visual	100%	App.Drg./ Supplier Catalogue /IS 3637	App.Drg./ Supplier Catalogue /IS 3637	Supplier's TC	P	V	R	

SL NO	COMPONENT & CHARACTRISTICS	CLASS	TYPE OF CHECK	QUALITY OF CHECK	REFERENCE DOCUMENT	ACCEPTANCE NORMS	FORMAT OF RECORD	AGENCY			REMARKS
								S	M	O	
1	2	3	4	5	6	7	8	9			10
8.2	Bore size	Major	Measurement	One/size	-DO-	-DO-	-DO-	P	V	R	
8.3	Porosity and element test	Major	Critical	100%	-DO-	-DO-	-DO-	P	V	R	
8.4	Gas volume and surge test	Major	Mechanical	One/Size	-DO-	-DO-	-DO-	P	V	R	
8.5	HV test at 2 KV AC & IR test	Major	Electrical	100%	-DO-	-DO-	-DO-	P	V	R	
8.6	Continuity for alarm/Trip	Major	Electrical	100%	-DO-	-DO-	-DO-	P	V	R	
9.0	**Marshalling cum cooler control box**										
9.1	Dimensions	Critical	Measurement	100%	MFR. STD / App. DRG.	MFR. STD / App. DRG.	Supplier's TC	P	W	R	
9.2	Make and rating of Components	Major	Visual	100%	-DO-	App Make	Supplier's TC	P	W	R	
9.3	Functional test	Major	Electrical	100%	-DO-	MFR. STD / DRG	Supplier's TC	P	W	R	
9.4	HV test at 2 KV AC for 1 min	Major	Electrical	100%	-DO-	MFR. STD / DRG	Supplier's TC	P	W	R	
9.5	IP 55 test on marshalling cum cooler control box	Major	Environment	--	--	--	Test report	--	--	R	Supplier's Test certificate shall be submitted for review
10.0	**Radiator**										

SL NO	COMPONENT & CHARACTRISTICS	CLASS	TYPE OF CHECK	QUALITY OF CHECK	REFERENCE DOCUMENT	ACCEPTANCE NORMS	FORMAT OF RECORD	AGENCY			REMARKS
								S	M	O	
1	2	3	4	5	6	7	8	9			10
10.1	Dimension, number of sections	Major	Measurement	100%	MFR. DRG	VTD DRG	Supplier's TC	P	V	R	
10.2	Leakage Test with Air	Major	Visual	100%	As per CBIP	As per CBIP	Supplier's TC	P	V	R	
10.3	Paint shade	Major	Visual & Measurement	Random	MFR. Specs /Drg	MFR. Specs /Drg	Supplier's TC	P	V	R	
10.4	Surface Preparation	Major	Measurement	100%	SA 2.5 of ISO 8503/2	SA 2.5 of ISO 8503/2	Supplier's TC	P	V	R	
11	**OLTC and drive mechanism**										
11.1	Make, Rating and model	Major	Visual	100%	MFR. Spec/ IS 8468 /IEC 214-1989	MFR. Spec/ IS 8468 /IEC 214-1989	Supplier's TC	P	V	R	
11.2	Copper Contact surface finish	Major	Visual	100%	IS 8468	IS 8468	Supplier's TC	P	V	R	
11.3	Contact Resistance test	Major	Visual	100%	Supplier's STD	Supplier's STD	Supplier's TC	P	V	R	
11.4	Electrical Routine test	Major	Electrical	100%	IS 8468/ IEC 214	IS 8468/ IEC 214	Supplier's TC	P	V	R	
11.5	Mechanical test on diverter switch including pressure test	Major	Mechanical	100%	-DO-	-DO-	-DO-	P	V	R	
11.6	HV test for Auxiliary	Major	Electrical	100%	-DO-	-DO-	-DO-	P	V	R	

SL NO	COMPONENT & CHARACTRISTICS	CLASS	TYPE OF CHECK	QUALITY OF CHECK	REFERENCE DOCUMENT	ACCEPTANCE NORMS	FORMAT OF RECORD	AGENCY			REMARKS
								S	M	O	
1	2	3	4	5	6	7	8	9			10
	circuit										
11.7	Mechanical test on Tap selector switch with motor drive	Major	Mechanical	100%	-DO-	-DO-	-DO-	P	V	R	
11.8	Pressure test for Oil Compartment	Major	Mechanical test	100%	-DO-	-DO-	-DO-	P	V	R	
12.0	**Transformer Oil**	Major	Testing	One Sample from each lot	Annexure D of BSES spec.	Annexure D of BSES spec.	STC	P	V	R	One sample of oil shall be drawn from **each lot of Transformer** offered for final inspection by BSES representative and same shall be tested at CPRI/ERDA lab as per relevant std.
13.0	**OTI / WTI**										
13.1	Make and Model	Critical	Visual	100%	MFR. STD/App. Drg.	MFR. STD/App. Drg.	Suppliers TC	P	P	R	
13.2	Calibration	Major	Electrical	100%	-DO-	-DO-	-DO-	P	P	R	
13.3	Check for alarm & trip	Major	Electrical	100%	-DO-	-DO-	-DO-	P	P	R	

SL NO	COMPONENT & CHARACTRISTICS	CLASS	TYPE OF CHECK	QUALITY OF CHECK	REFERENCE DOCUMENT	ACCEPTANCE NORMS	FORMAT OF RECORD	AGENCY			REMARKS
								S	M	O	
1	2	3	4	5	6	7	8	9			10
	signal operation against set value										
13.4	HV test	Major	Electrical	100%	-DO-	-DO-	-DO-	P	V	R	
13.5	Switch Setting	Major	Mechanical	100%	-DO-	-DO-	-DO-	P	P	R	
14.0	**Bushing Metal parts**										
14.1	Dimension Checks	Major	Mechanical	100%	MFR. STD /IS 3347	MFR. STD /IS 3347	Supplier's TC	P	V	R	
14.2	Surface Finish	Major	Visual	100%	-DO-	-DO-	-DO-	P	V	R	
15.0	**Current Transformers**										
15.1	Dimensions, make	Major	Measurement	100%	MFR. STD /App. DRG. / IS 2705	MFR. STD /App. DRG. / IS 2705	Supplier's TC	P	P	R	
15.2	Rating and terminal marking	Major	Physical	100%	MFR. APPD. DRG	MFR. APPD. DRG	Supplier's TC	P	P	R	
15.3	Measurement of ratio and phase angle error	Major	Electrical	100%	IS 2705	IS 2705	Supplier's TC	P	V	R	
15.4	High Voltage test	Major	Electrical	100%	-DO-	-DO-	-DO-	P	V	R	
15.5	Inter-Turn insulation test	Major	Electrical	100%	-DO-	-DO-	-DO-	P	V	R	
15.6	Knee Point Voltage	Major	Electrical	100%	-DO-	-DO-	-DO-	P	V	R	Only for CI-PS CT
15.7	Excitation Current	Major	Electrical	100%	-DO-	-DO-	-DO-	P	V	R	Only for CI-PS

SL NO	COMPONENT & CHARACTRISTICS	CLASS	TYPE OF CHECK	QUALITY OF CHECK	REFERENCE DOCUMENT	ACCEPTANCE NORMS	FORMAT OF RECORD	AGENCY			REMARKS
								S	M	O	
1	2	3	4	5	6	7	8	9			10
											CT
15.8	Secondary winding resistance	Major	Electrical	100%	-DO-	-DO-	-DO-	P	V	R	Only for CI-PS CT
15.9	Polarity	Major	Electrical	100%	-DO-	-DO-	-DO-	P	V	R	
16.0	**Valves/ Butterfly valves**										
16.1	Make & operation	Critical	Visual	100%	APP.drg./MFR. STD	APP.drg./MFR. STD	Supplier's TC	P	P	R	
16.2	Leakage test for body	Major	Mechanical	100%	-DO-	-DO-	-DO-	P	P	R	
16.3	Leakage test for top spindle	Major	Mechanical	100%	-DO-	-DO-	-DO-	P	P	R	
16.4	Mounting dimensions	Major	Measurement	100%	-DO-	-DO-	-DO-	P	P	R	
16.5	Material of Body & Seat	Major	Chemical & measurement	1 sample per lot	-DO-	-DO-	-DO-	P	V	R	
17.0	**Air Cell**										
17.1	Make	Critical	Visual	100%	MFR. STD/App. drg.	MFR. STD/App. drg.	Supplier's TC	P	V	R	
17.2	Dimensional check	Major	Measurement	100%	-DO-	-DO-	-DO-	P	V	R	
17.3	Pressure test for 24 hrs. for leakage	Major	Mechanical	100%	-DO-	No Visible Damage	-DO-	P	V	R	
17.4	Inflation and deflation test (10 times)	Critical	Mechanical	100%	-DO-	-DO-	-DO-	P	V	R	

SL NO	COMPONENT & CHARACTRISTICS	CLASS	TYPE OF CHECK	QUALITY OF CHECK	REFERENCE DOCUMENT	ACCEPTANCE NORMS	FORMAT OF RECORD	AGENCY			REMARKS
								S	M	O	
1	2	3	4	5	6	7	8	9			10
18.0	**Pressure relief Valve**										
18.1	Make	Critical	Visual	100%	MFR. STD/ App. Drg.	MFR. STD/ App. Drg.	-DO-	P	P	R	
18.2	Operating pressure	Major	Mechanical	100%	-DO-	-DO-	-DO-	P	P	R	
18.3	Switch Contact test	Major	Electrical	100%	-DO-	-DO-	-DO-	P	P	R	
18.4	Mounting dimensions	Major	Measurement	100%	-DO-	-DO-	-DO-	P	V	R	
18.5	HV test between body & terminal	Major	Electrical	100%	-DO-	-DO-	-DO-	P	V	R	
19.0	**Fan Motor & Cooler Fan**										
19.1	Verification of Make & rating	Major	Physical	100%	MFR. STD/App. DRG.	MFR. STD/App. DRG.	Supplier's TC	P	V	R	
19.2	Input current power speed	Major	Electrical	100%	-DO-	-DO-	-DO-	P	V	R	
19.3	HV test at 2.0 KV	Major	Electrical	100%	-DO-	-DO-	-DO-	P	V	R	
19.4	Insulation resistance test	Major	Electrical	100%	-DO-	-DO-	-DO-	P	V	R	
20.0	**Gasket**										
20.1	Appearance & Finish	Major	Mechanical	1 sample per size per lot	IS 4253-II, 1980	IS 4253-II, 1980	Supplier's TC	P	V	R	
20.2	Hardness, IRHD	Major	Mechanical	-DO-	-DO-	-DO-	-DO-	P	V	R	
20.3	Tensile Strength	Major	Mechanical	-DO-	-DO-	-DO-	-DO-	P	V	R	

SL NO	COMPONENT & CHARACTRISTICS	CLASS	TYPE OF CHECK	QUALITY OF CHECK	REFERENCE DOCUMENT	ACCEPTANCE NORMS	FORMAT OF RECORD	AGENCY			REMARKS
								S	M	O	
1	2	3	4	5	6	7	8	9			10
20.4	Compressibility	Major	Mechanical	-DO-	-DO-	-DO-	-DO-	P	V	R	
20.5	Compression set	Major	Mechanical	-DO-	-DO-	-DO-	-DO-	P	V	R	
20.6	Flexibility	Major	Mechanical	-DO-	-DO-	-DO-	-DO-	P	V	R	
21.0	**Silica gel Breather**										
21.1	Type / model	Major	Visual	100%	MFR. STD /DRG	MFR. STD /DRG	Supplier's TC	P	V	R	
21.2	Color of Gel	Major	Visual	100%	-DO-	-DO-	-DO-	P	V	R	
B	**In Process**										
1	**Winding**										
1.1	Check for Visual, physical and dimensional Parameters and no. of parallel conductors.										
1.1.1	Measurement of axial height, OD & ID& current density calculation.	Major	Measurement	100%	MFR. Data/Drg	MFR. Data/Drg	QC report	--	P	W	
1.1.2	Copper Conductor size (Bare & covered)	Major	Measurement	100%	-DO-	-DO-	-DO-	--	P	W	
1.1.3	No. of Turns / Disc	Major	Measurement	100%	-DO-	-DO-	-DO-	--	P	R	
1.2	Winding height	Major	Measurement	100%	-DO-	-DO-	-DO-	--	P	W	

SL NO	COMPONENT & CHARACTRISTICS	CLASS	TYPE OF CHECK	QUALITY OF CHECK	REFERENCE DOCUMENT	ACCEPTANCE NORMS	FORMAT OF RECORD	AGENCY			REMARKS
								S	M	O	
1	2	3	4	5	6	7	8	9			10
1.3	Visual inspection of Brazed joints as applicable	Major	Visual	100%	-DO-	-DO-	-DO-	--	P	R	
1.4	Tap Leads termination in case of tap winding	Major	Visual	100%	-DO-	-DO-	-DO-	--	P	R	
1.5	Current density calculation	--	--	--	--	--	--	--	P	W	
2.0	**Core Assembly**										
2.1	Visual & Key Dimensional check										
2.1.1	Diagonal distance	Major	Measurement	100%	MFR.Drg	MFR.Drg	QC report	--	P	W	
2.1.2	Window centre distance	Major	Measurement	100%	-DO-	-DO-	-DO-	--	P	W	
2.1.3	Window height	Major	Measurement	100%	-DO-	-DO-	-DO-	--	P	W	
2.2	Stack Thickness	Major	Measurement	100%	-DO-	-DO-	-DO-	--	P	W	
2.3	High Voltage test at 2 KV AC for l min between core & core clamp, Yoke bolt	Major	Electrical	100%	-DO-	-DO-	-DO-	--	P	W	
2.4	Pre-Core loss measurement	Major	Electrical	100%	-DO-	-DO-	-DO-	--	P	W	
3.0	**Core-Coil Assembly**										
3.1	Top & Bottom insulation	Major	Visual	100%	MFR.Data	MFR.Data	QC report	--	P	R	

SL NO	COMPONENT & CHARACTRISTICS	CLASS	TYPE OF CHECK	QUALITY OF CHECK	REFERENCE DOCUMENT	ACCEPTANCE NORMS	FORMAT OF RECORD	AGENCY			REMARKS
								S	M	O	
1	2	3	4	5	6	7	8	9			10
	arrangement				/DRG	/DRG					
3.2	Lead arrangement	Critical	Visual	100%	-DO-	-DO-	-DO-	--	P	R	
3.3	Tap & Lead End Brazing & Insulation	Critical	Visual	100%	-DO-	-DO-	-DO-	--	P	R	
3.4	Dimension of Coil After Shrinkage	Major	Measurement	100%	-DO-	-DO-	-DO-	--	P	R	
3.5	Verification of Major electrical clearances	Major	Visual & Measurement	100%	-DO-	-DO-	-DO-	--	P	R	
3.6	HV/LV Connection	Major	Visual	100%	-DO-	-DO-	-DO-	--	P	R	
4.0	**Core-Coil Assembly Before Ovening**										
4.1	Initial Ratio test	Major	Measurement	100%	-DO-	-DO-	-DO-	--	P	R	
5.0	**Core-coil assembly during drying**										
5.1	Measurement & recording of temperature & drying time during vacuum treatment.	Major	Visual	100%	MFR.Data /DRG	MFR.Data /DRG	QC report	--	P	R	
5.2	Check for completeness of drying	Major	Visual	100%	MFR.Data /DRG	MFR.Data /DRG	QC report	--	P	R	
5.3	Certification of all test	Major	Visual	100%	MFR.Data /DRG	MFR.Data /DRG	QC report	--	P	R	

SL NO	COMPONENT & CHARACTRISTICS	CLASS	TYPE OF CHECK	QUALITY OF CHECK	REFERENCE DOCUMENT	ACCEPTANCE NORMS	FORMAT OF RECORD	AGENCY			REMARKS
								S	M	O	
1	2	3	4	5	6	7	8	9			10
6.0	**Core-Coil Assembly After Ovening**										
6.1	Ratio Test & Magnetic Balance test	Major	Electrical	100%	-DO-	-DO-	-DO-	--	P	W	
6.2	Recording of time/Temp, Vacuum	Major	Measurement	100%	-DO-	-DO-	-DO-	--	P	R	
6.3	Record of Moisture extract	Major	Measurement	100%	MFR. STD	MFR. STD	QC report	--	P	R	
6.4	Verification of completeness & Drying	Major	Verify	100%	MFR. STD	MFR. STD	QC report	--	P	R	
6.5	Insulation resistance measurement by Megger	Major	Electrical	100%	MFR. STD	MFR. STD	Test report	--	P	R	
6.6	Earthing connection	Major	Visual	-DO-	MFR. STD	MFR. STD	QC Report	--	P	R	
7.0	**Tanking**										
7.1	Electrical clearance arrangement	Major	Measurement	100%	MFR. DRG	MFR. DRG	QC report	--	P	R	
7.2	Verification of Core-Frame Clamping arrangement	Major	Visual	100%	-DO-	-DO-	-DO-	--	P	R	
7.3	Core to frame insulation resistance test & HV test at 2 KV for min	Major	Electrical	100%	-DO-	-DO-	-DO-	--	P	R	

SL NO	COMPONENT & CHARACTRISTICS	CLASS	TYPE OF CHECK	QUALITY OF CHECK	REFERENCE DOCUMENT	ACCEPTANCE NORMS	FORMAT OF RECORD	AGENCY			REMARKS
								S	M	O	
1	2	3	4	5	6	7	8	9			10
8.0	**Final Assembly for testing**										
8.1	Fittings of external accessories	Major	Visual	100%	MFR. STD /DRG	MFR. STD /DRG	Job Card	--	P	R	
8.2	Internal Oil leakage test on main unit	Major	Visual	100%	CBIP	CBIP	QC report	--	P	R	
C	**Final testing**										
1	**Routine Test**										
1.1	Voltage Ratio test	Major	Electrical	100%	IS 2026	IS 2026	Test Report	--	P	W	
1.2	Winding Resistance at all tap corrected to 75°C	Major	Electrical	100%	IS 2026	IS 2026	Test report	--	P	W	
1.3	No Load Loss & Current @90%,100%&110% of rated voltage	Major	Electrical	100%	IS 2026	IS 2026	Test report	--	P	W	To be repeated after type test.
1.4	Impedance Voltage/Short Circuit Impedance(Principal Tap) Load Loss @Principal, Max, Mini Tap	Major	Electrical	100%	IS 2026	IS 2026	Test report	--	P	W	
1.5	Induced over voltage	Major	Electrical	100%	IS 2026	IS 2026	Test report	--	P	W	To be repeated after Impulse test
1.6	Separate Source Voltage	Major	Electrical	100%	IS 2026	IS 2026	Test report	--	P	W	

SL NO	COMPONENT & CHARACTRISTICS	CLASS	TYPE OF CHECK	QUALITY OF CHECK	REFERENCE DOCUMENT	ACCEPTANCE NORMS	FORMAT OF RECORD	AGENCY			REMARKS
								S	M	O	
1	2	3	4	5	6	7	8	9			10
	Test										
1.7	Insulation Resistance &PI(10 min / 1 min)	Major	Electrical	100%	--	--	Test report	--	P	W	By 5 KV Megger PI Shall be more than1.5
1.8	Voltage Vector Relationship & Polarity	Major	Electrical	100%	IS 2026	IS 2026	Test report	--	P	W	
1.9	Magnetic Balance Test	Major	Electrical	100%	IS 2026	IS 2026	Test report	--	P	W	
1.10	Oil leakage test	Major	Visual	100%	CBIP	CBIP	Test report	--	P	W	
1.11	Auxiliary circuit insulation test for OLTC, 2.0 KV AC for 1 min	Major	Electrical	100%	--	Withstand 2 KV for 1 min	Test report	--	P	W	
1.12	Polarity check & Ratio Test of LVWTI CT/ HVWTI CT & NCT	Major	Electrical	100%	IS 2026	IS 2026	Test report	--	P	W	
1.13	Magnetic circuit Test at 2KV between Core & Frame	Major	Electrical	100%	IS 2026	IS 2026	Test report	--	P	W	
1.14	Measurement of auxiliary losses(Losses taken by Fan)	Major	Electrical	100%	IS 2026	IS 2026	Test report	--	P	W	
1.15	BDV test on Transformer Oil	Major	Electrical	100%	IS 2026	IS 2026	Test report	--	P	W	

SL NO	COMPONENT & CHARACTRISTICS	CLASS	TYPE OF CHECK	QUALITY OF CHECK	REFERENCE DOCUMENT	ACCEPTANCE NORMS	FORMAT OF RECORD	AGENCY			REMARKS
								S	M	O	
1	2	3	4	5	6	7	8	9			10
1.16	Routine Test on Tank	Major	Electrical	100%	IS 2026	IS 2026	Test report	--	P	W	
1.17	Power frequency withstand on auxiliary circuit	Major	Electrical	100%	IS 2026	IS 2026	Test report	--	P	W	
1.18	Measurement of Cap & tandelta of Wdg, Oil and HV bushing	Major	Electrical	100%	--	--	Test report	--	P	W	
1.19	Excitation & Knee point Vol. of PS Core of NCT.	Major	Electrical	100%	IS 2026	IS 2026	Test report	--	P	W	
1.20	Routine (Functional) Test on OLTC	Major	Electrical	100%	IS 2026	IS 2026	Test report	--	P	W	
1.21	SFRA	Major	Electrical	100%	IS 2026	IS 2026	Test report	--	P	W	
2.0	**Type test (One unit of each type and rating of Transformer)**										
2.1	Heat Run Test (Temp. Rise Test)	Major	Testing	One Unit	IS 2026	IS 2026	Test Report	--	P	W	
2.2	Impulse withstand Test on all HV & LV Limb for Chopped wave.	Major	Testing	One Unit	IS 2026	IS 2026	Test Report	--	P	W	
2.3	DGA Test Before & After temperature rise	Major	Testing	One Unit	Relevant std.	Relevant std.	Test Report	--	P	W	
2.4	Pressure relief device test	Major	Testing	One Unit	MFR. STD	MFR. STD	Test Report	--	P	W	
3.0	**Other test**										

SL NO	COMPONENT & CHARACTRISTICS	CLASS	TYPE OF CHECK	QUALITY OF CHECK	REFERENCE DOCUMENT	ACCEPTANCE NORMS	FORMAT OF RECORD	AGENCY			REMARKS
								S	M	O	
1	2	3	4	5	6	7	8	9			10
3.1	**Marshalling cum cooler control box**										
3.1.1	BOM verification	Major	Verification	100%	App MFR.Drg	App MFR.Drg	QC report	--	P	W	
3.1.2	Operation / Continuity of Wiring with OTI, WTI operation & other accessories	Major	Electrical	100%	MFR. STD	MFR. STD	QC report	--	P	W	
3.1.3	2 KV (HV test) on Marshalling cum cooler control box	Major	Electrical	100%	MFR. STD	MFR. STD	QC report	--	P	W	
3.1.4	Operation of Instruments(BR)	Major	Electrical	100%	MFR. STD	MFR. STD	QC report	--	P	W	
3.1.5	Visual & Dimensional check	Major	Measurement	100%	APPD MFR.Drg.	APPD MFR.Drg.	QC report	--	P	W	
4.0	**Special Test (One unit of each type and rating of Transformer)**										
4.1	Zero Phase Sequence Test	Major	Testing	One Unit	IS 2026	IS 2026	Test Report	--	P	W	
4.2	Noise Level Test	Major	Testing	One Unit	NEMA TR-1	NEMA TR-1	Test Report	--	P	W	
4.3	No Load Harmonic Test	Major	Testing	One Unit	IS 2026	IS 2026	Test Report	--	P	W	
4.4	HV Test on all auxiliary equipment and wiring after complete assembly	Major	Testing	One Unit	--	--	Test Report	--	P	W	

SL NO	COMPONENT & CHARACTRISTICS	CLASS	TYPE OF CHECK	QUALITY OF CHECK	REFERENCE DOCUMENT	ACCEPTANCE NORMS	FORMAT OF RECORD	AGENCY			REMARKS
								S	M	O	
1	2	3	4	5	6	7	8	9			10
D	**Dispatch & Packing**										
1.1	Identification & packing	Major	Visual	100%	As per packing list	As per packing list	Packing List	--	P	--	
1.2	Check for proper Packing	Major	Visual	100%	As per packing list	As per packing list	Packing List	--	P	--	
1.3	Visual check before dispatch	Major	Visual	100%	As per packing list	As per packing list	Packing List	--	P	--	

LEGEND:

S: Supplier
M: Main Contractor (Manufacturer)
O: Owner (BYPL)

P - Perform
V - Verify
R – Review
W- Witness

ANNEXURE – H – TECHNICAL SPECIFICATION OF MATERIAL TRACKING -GPS DEVICE

Supply of GPS Device shall be in Vendors scope, however it shall be returned to Vendor once Goods are received.

Detailed requirement of GPS Device is as below:

Once the material is dispatched after Final clearance Transport Vehicle shall have GPS Tracking Device and status of dispatch of material shall be sent to all the stake holders via SMS thru GPS Device.

Approve make is Map my India Asset Tracking device.

SCHEDULE – A –GUARANTEED TECHNICAL PARTICULARS (DATA BY SELLER)

Sr.No.	Particular	Specified / Required	Offered
1.0	General		
1.1	Make		
1.2	Type	As per Annexure C of specification	
2.0	Nominal continuous rating, KVA		
2.1	ONAN	As per Cl 11.1 of Annexure C	
2.2	ONAF	As per Cl 11.2 of Annexure C	
3.0	Rated voltage (KV)		
3.1	HV winding	As per Cl 9.1 of Annexure C	
3.2	LV winding	As per Cl 9.2 of Annexure C	
4.0	Rated current (Amps)		
4.1	HV winding, ONAN / ONAF		
4.2	LV winding , ONAN / ONAF		
5.0	Connections		
5.1	HV winding	As per Annexure C of specification	
5.2	LV winding	As per Annexure C of specification	
5.3	Vector group reference	Dyn11	
6.0	Impedance at principal tap rated current and frequency%		
6.1	Impedance (%)	As per Cl. 12.0 of Annexure C	
6.2	Reactance (%)		
6.3	Resistance (%)		
6.4	Impedance at lowest tap rated current and frequency		
6.5	Impedance at highest tap rated current and frequency		
6.6	Transformer X/R ratio		
7.0	Resistance of the winding at 75^0C at principal tap (ohm)		
7.1	a) HV		
7.2	b)LV		
8.0	Zero sequence impedance (Ohm)		
8.1	a) HV		
8.2	b) LV		
9.0	Guaranteed maximum losses at principal tap at full load and 75^0 C without any positive tolerance kW		
9.1	No load losses (max.)	As per Cl 13.0 Annexure C	
9.2	Load losses (max.)	As per Cl 14.0 Annexure C	
9.3	Cooler fan losses (max.)		
9.4	Total I^2R losses of windings @ 75 deg C		
9.5	Total stray losses @ 75 deg C		

9.6	Total losses (max.)		
9.7	No load loss at maximum permissible voltage and frequency (approx.) kW		
10.0	Temperature rise over reference design ambient of 40 ^{0}C		
10.1	Top oil by thermometer ^{0}C	40^0 C	
10.2	Winding by resistance ^{0}C	45^0 C	
10.3	Winding gradient at rated current ^{0}C		
10.3.1	HV		
10.3.2	LV		
11.0	Efficiency		
11.1	Efficiency at 75^0 C and unity power factor %		
11.1.1	At 110% load		
11.1.2	At 100% load		
11.1.3	At 80% load	Not less than 99.5 %	
11.1.4	At 60% load		
11.1.5	At 40% load		
11.1.6	At 20% load		
11.2	Efficiency at 75^0 C and 0.8 power factor lag %		
11.2.1	At 110% load		
11.2.2	At 100% load		
11.2.3	At 80% load		
11.2.4	At 60% load	Not less than 99.5 %	
11.2.5	At 40% load		
11.2.6	At 20% load		
11.3	Maximum efficiency %		
11.4	Load and power factor at which Max efficiency occurs		
12.0	Regulation (%)		
12.1	Regulation at full load at 75^0 C		
12.1.1	At unity power factor		
12.1.2	At 0.8 power factor lagging		
12.2	Regulation at 110% load at 75^0 C		
12.2.1	At unity power factor		
12.2.2	At 0.8 power factor lagging		
13.0	Tapping		
13.1	Type		
13.2	Capacity		
13.3	Range-steps x % variation	As per Annexure C of specification	
13.4	Taps provided on HV winding (Yes/No)	Yes	
14.0	OLTC gear		
14.1	Make		
14.2	Type		
14.3	Reference std		

14.4	No of compartment		
14.5	Mounting arrangement	Side mounted type although External Intank Type is also preferable	
14.6	Rated current Amp		
14.7	Rated step capacity, kVA		
14.8	Short circuit withstand for 2 secs, kA		
14.9	Time required for one step change sec.		
14.10	Rated voltage for motor, V AC		
14.11	Rating of motor		
14.12	Rated voltage for auxiliaries V		
14.13	Consumption of auxiliaries		
14.14	OLTC features as per specification, Yes/No		
14.15	Does the overload rating of OLTC match with that of the transformer under all conditions Yes/No		
16.0	Cooling system		
16.1	Type of cooling	As per Annexure C of specification	
16.2	No. of cooling unit groups		
16.3	Capacity of cooling units		
16.4	Mounting of radiators		
16.5	Number of radiators and Size		
16.6	Type & size of radiator header main valve		
16.7	Type & size of individual radiator valve		
16.8	Total radiating surface, sq mm		
16.9	Thickness of radiator tubes, mm	Minimum 1.2 mm	
16.10	Schematic flow diagram of the cooling system furnished (Yes/No)		
16.11	Type and make of Fan motor		
16.12	No. of fan motor per bank (Working + Standby)		
16.13	Rated Power Input (kW)		
16.14	Rated Voltage, Speed of Motor		
16.15	Efficiency of motor at Full load(%)		
16.16	Locked Rotor current(Amps)		
17.0	Details of tank		
17.1	Material	Robust mild steel plate without pitting and low carbon content	
17.2	Thickness of sides mm		
17.3	Thickness of bottom mm		
17.4	Thickness of cover mm		
17.5	Confirmation of tank designed and tested for vacuum pressure (Ref: CBIP manual) (Yes/No)		
17.5.1	Vacuum mm of Hg. / (kN/m^2)	As per CBIP	

17.5.2	Pressure mm of Hg	Twice the normal head of oil / normal pressure + 35 kN/m^2 whichever is lower , As per CBIP	
17.6	Is the tank lid slopped?	Yes	
17.7	Inspection cover provided (Yes/No)		
17.8	Location of inspection cover (Yes/No)		
17.9	Min. dimensions of inspection cover (provide list of all inspection cover with dimension), mm x mm		
18.0	Core		
18.1	Type:	Core	
18.2	Core material grade	Premium grade minimum M3 or better	
18.3	Thickness of lamination mm	Max. 0.23 mm with insulating coating on both sides	
18.4	Insulation between core lamination		
18.5	Design flux density of the core at rated condition at principal tap,Tesla		
18.6	Maximum flux density allowed in the core at extreme overexcitation / overfluxing , Tesla		
18.7	Equivalent cross section area of core, mm^2		
18.8	Guaranteed No load current at 90% / 100% / 110% rated voltage & frequency (Amp)	@ 100% - 0.5% of RFLC @ 110% - 1.0% of RFLC	
18.8.1	HV		
18.8.2	LV		
19.0	Type of winding		
19.1	HV		
19.2	LV		
19.3	Conductor material	Electrolytic copper as per relevant standard	
19.4	Maximum current density allowed, Amp per mm^2	As per Annexure C	
19.5	Gauge/area of cross section of conductor, mm^2		
19.5.1	HV		
19.5.2	LV		
19.6	Maximum current density achieved in winding (LV/HV/HVT) – Amps/ mm^2		
19.7	Insulating material		
19.7.1	HV turn		
19.7.2	LV turn		
19.7.3	LV- core		
19.7.4	HV-LV		

19.8	Insulating material thickness, mm		
19.8.1	HV turn		
19.8.2	LV turn	-	
19.8.3	LV to core		
19.8.4	HV to LV		
20.0	Minimum design clearance , mm		
20.1	HV to earth in air		
20.2	HV to earth in oil		
20.3	LV to earth in air		
20.4	LV to earth in oil	-	
20.5	Between HV & LV in Air		
20.6	Between HV & LV in oil		
20.7	Top winding and yoke	-	
20.8	Bottom winding and yoke		
21.0	Insulating oil		
21.1	Quantity of oil Ltrs	-	
21.1.1	In the transformer tank		
21.1.2	In each radiator		
21.1.3	In OLTC chamber		
21.1.4	Total quantity		
21.2	10% excess oil furnished?	Yes	
21.3	Type of oil	New insulating oil as per IS: 335, latest edition and Cl. 4.2.7 of the specification	
21.4	Oil preservation system provided (Yes/No)		
22.0	Bushing		
22.1	Make		
22.2	Type		
22.3	Reference standard		
22.4	Voltage class, kV		
22.4.1	HV side bushing		
22.4.2	LV side line and neutral bushing		
22.5	Creepage factor for all bushing mm / kV	As per Annexure C of specification	
22.6	Rated current , Amp		
22.6.1	HV bushing		
22.6.2	LV line and neutral bushing		
22.7	Rated thermal short current		
22.7.1	HV bushing	As per Annexure C of specification	
22.7.2	LV line and neutral bushing	As per Annexure C of specification	
22.8	Weight Kg		
22.8.1	HV bushing		
22.8.2	LV line and neutral bushing		
22.9	Free space required for bushing removal, mm		
22.9.1	HV bushing		
22.9.2	LV line and neutral bushing		

23.0	Terminal connections			
23.1	HV	As per Annexure C of specification		
23.2	LV	As per Annexure C of specification		
23.3	LV Neutral	As per Annexure C of specification		
24.0	H.V. Cable box/Terminals			
24.1	Suitable for cable/conductor type size	As per Annexure C of specification		
24.2	Termination height , mm	1000 mm , minimum		
24.3	Gland plate dimension mm x mm			
24.4	Gland plate material	Aluminium		
24.5	Gland plate thickness , mm	5 mm minimum		
24.6	Phase to clearance inside box / terminals , mm			
24.7	Phase to earth inside box / terminals , mm			
24.8	Cable box door arrangement as per clause 4.2.9.2			
25.0	L.V line side cable box			
25.1	Suitable for cable type , size	As per Annexure C of specification		
25.2	Termination height , mm	1000 mm , minimum		
25.3	Gland plate dimension mm x mm			
25.4	Gland plate material	Aluminum		
25.5	Gland plate thickness , mm	5 mm minimum		
25.6	Phase to clearance inside box / terminals , mm			
25.7	Phase to earth inside box , mm			
25.8	Cable box door arrangement as per clause 4.2.9.2			
26.0	LV Neutral cable box			
26.1	Suitable for cable type , size	As per Annexure C of specification		
26.2	Termination height , mm			
26.3	Gland plate dimension mm x mm			
26.4	Gland plate material	Aluminum		
26.5	Gland plate thickness , mm	5 mm minimum		
26.6	Phase to clearance inside box, mm			
26.7	Phase to earth inside box , mm			
27.0	Marshalling box cubical provided as per clause no. 4.2.11 of spec. (Yes / no)			
27.1	Mounting of marshalling box	Separate mounted		
28.0	Neutral Current Transformer (NCT)			
28.1	Type			
28.2	Make			
28.3	Reference standard			
28.4	Rated Voltage	12kV		
28.5	CT Ratios	20/25 MVA, Dyn11	25/31.5 MVA, Dyn11	

		Core 1	Core 2	Core 1	Core 2	
		1600/1 A	1600/1A	1600-2000/1 A	1600-2000/1 A	
28.6	Burden ,VA	-	20	-	20	
28.7	Class of Accuracy	PS	5P20	PS	5P20	
28.8	KPV , volts , minimum	40(Rct +8)	-	40(Rct+ 8)	-	
28.9	Resistance, ohm @ 75 deg C, maximum	1	-	1	-	
28.10	Magnetizing current @ Vk/4 , mA , maximum	30	-	100	-	
28.11	Short time withstand current	26.3 kA for 3 sec.				
29.0	Winding current transformer (WCT)					
29.1	Type					
29.2	Make					
29.3	Reference standard					
29.4	CT ratio					
29.5	Burden ,VA	Manufacturer Std.				
29.6	Class of accuracy	Manufacturer Std.				
30.0	Pressure release device					
30.1	Minimum pressure the device is set to rupture					
30.1.1	For main tank					
30.1.2	For OLTC					
31.0	Alarm and trip contact ratings of protective devices					
31.1	Rated/making/ breaking currents , Amp @ voltage for					
31.1.1	PRV for main tank					
31.1.2	PRV for OLTC					
31.1.3	Buchholz relay					
31.1.4	Oil surge relay for OLTC					
31.1.5	Sudden pressure relay					
31.1.6	OTI					
31.1.7	WTI					
31.1.8	Magnetic oil gauge					
32.0	Fittings accessories each transformer furnished as per clause No. (Bidder shall attach separate sheet giving details, make and bill of materials)					
33.0	Painting: as per clause for the transformer , cable boxes, radiator, marshalling box, etc (Yes/No)					
34.0	Over all transformer dimensions					
34.1	Length , mm	6.5 metres maximum				

34.2	Breadth , mm	5.0 metres maximum	
34.3	Height , mm	5.0 metres maximum	
35.0	Transformer tank dimensions		
35.1	Length , mm		
35.2	Breadth , mm		
35.3	Height , mm		
36.0	Marshalling box dimensions		
36.1	Length , mm		
36.2	Breadth , mm		
36.3	Height , mm		
37.0	Weight data		
37.1	Core, kG		
37.2	Frame parts, kG		
37.3	Core and frame, kG		
37.4	Total winding, kG		
37.5	Core and frame winding, kG		
37.6	Tank, kG		
37.7	Tank lid, kG		
37.8	Empty conservator tank , kG		
37.9	Each radiator empty , kG		
37.10	Total weight of all radiator empty , kG		
37.11	Weight of oil in tank , kG		
37.12	Weight of oil in each conservator , kG		
37.13	Weight of oil in each radiators , kG		
37.14	Total weight of oil in radiator , kG		
37.15	OLTC gear including oil , kG		
37.16	Total transport weight of the transformer , kG		
37.17	Total transport weight of the transformer with OLTC and all accessories		
38.0	Volume data		
38.1	Volume of oil in main tank , liters		
38.2	Volume of oil between highest and lowest levels of main conservator ,liters		
38.3	Volume of oil between highest and lowest levels of OLTC conservator, liters		
38.4	Volume of oil in each radiator , liters		
38.5	Total volume of oil in radiators , liters		
38.6	Volume of oil in OLTC , liters		
38.7	Transformer total oil volume , liters		
39.0	Shipping data		

39.1	Weight of heaviest package, kG		
39.2	Dimensions of the largest package (L x B x H) mm		
40.0	Tests		
40.1	All in process tests confirmed as per Cl. (Yes /No)		
40.2	All types tests confirmed as per Cl. (Yes /No)		
40.3	All in routine tests confirmed as per Cl. (Yes /No)		
40.4	All in special tests confirmed as per Cl. (Yes /No)		

SCHEDULE – B –GUARANTEED TECHNICAL PERTICULARS OF TRANSFORMER OIL

Bidder to submit hard copy duly filled & signed along with techno commercial offer. Bidder to submit separate GTP for each type of insulating oil

S no	Item description	Specification requirement	Data by Vendor
1.0	Manufacturer Name		
1.1		Address	
1.2		Contact person	
1.3		Contact telephone no	
2.0	**Function**		
2.1	Viscosity		
2.1.1	Viscosity at 40^0C	15 mm^2/s, Max	
2.1.2	Viscosity at 0^0C	1800 mm^2/s, Max	
2.2	Pour Point	- 10^0C, Max	
2.3	Water content	30 mg/Kg, Max	
2.4	Breakdown voltage		
2.4.1	New unfiltered oil	30 kV, Min	
2.4.2	After filtration	70 kV, Min	
2.5	Density at 20^0C	0.895 g/ml, Max	
2.6	Dielectric dissipation factor at 90^0C	0.005, Max	
2.7	Particle Content	Manufacturer to specify the data	
3.0	**Refining/Stability**		
3.1	Appearance of oil	Clear, free from sediment and suspended matter	
3.2	Acidity	0.01 mg KOH/g, Max	
3.3	Interfacial tension at 27^0C	0.04 N/m, Min	
3.4	Total sulphur content	Manufacturer to specify the data	
3.5	Corrosive sulfur	Not-corrosive	
3.6	Potentially Corrosive sulfur	Not-corrosive	
3.7	DBDS	Not detectable (<5 mg/kg)	
3.8	Inhibitor	Not detectable (<0.01%)	
3.9	Metal Passivator	Not detectable (<5 mg/kg)	
3.10	Other additives	Manufacturer to specify the data	
3.11	2-furfural and related Compounds content	Not detectable (<0.05 mg/kg) for each individual compound	
4.0	**Performance**		

4.1	Oxidation stability, test duration 164 h		
4.1.1	Total acidity	1.2 mg KOH/g, Max	
4.1.2	Sludge	0.8%, Max	
4.1.3	DDF at 90^0C	0.5, Max	
4.2	Gassing Tendency	Manufacturer to specify the data	
4.3	ECT	Manufacturer to specify the data	
5.0	**Health,safety and Environment**		
5.1	Flash point	135^0C, Min	
5.2	PCA content Max	3%, Max	
5.3	PCB content	Not detectable (<2 mg/Kg)	

SCHEDULE – C–RECOMMENDED SPARES (DATA BY SUPPLIER)

List of recommended spares as following –

Sr No	Description of spare part	Unit	Quantity
1		No	
2		No	
3			
4			
5			
6			
7			

BSES

Technical Specification

Of

Conventional Oil filled Distribution Transformer

Specification no – BSES-TS-12-TRDU-R0

Rev:		0
Date:		01 Apr 2022
Prepared by	Vani Sood / Pronab Bairagi	
	Abhishek Harsh	
Reviewed by	Srinivas Gopu	
	Amit Tomar	
Approved by	Gaurav Sharma	
	K. Sheshadri	

INDEX

Record of Revision....3

1.0 Scope of Supply....4

2.0 Codes & standards....4

4.0 Construction & Design....10

5.0 Fittings and Accessories on Transformer....24

6.0 Approved make of components....28

7.0 Quality assurance....28

8.0 Progress Reporting....30

9.0 Inspection & testing....30

10.0 Packing , Shipping, Handling and Storage....37

11.0 Deviations....38

12.0 Drawings& Data Submission Matrix....38

Annexure A Scope of supply....40

Annexure B Service Conditions....41

Annexure C Technical Particulars of transformer oil....43

Annexure D Manufacturing Quality Assurance Plan....45

Schedule A Guaranteed Technical Particulars (Data by Seller)....70

Schedule B Guaranteed Technical Particulars of Transformer Oil....79

Schedule C Recommended Spares (Data by Seller)....82

Record of Revision

SI No.	Revision No	Item/Clause No.	Nature of change	Approved by

1.0 Scope of Supply

For scope of supply, refer annexure – A.

2.0 Codes & standards

a) Materials, equipment and methods used in the manufacture of Transformer shall conform to the latest edition of below mentioned standards.

b) Vendor shall possess valid BIS Certification.

IS 1180	Outdoor type oil immersed distribution transformer upto and including 2.5MVA,33kV
IS 2026	Power Transformers
IS 2026-4	Terminal Marking, tappings and Connections for Power Transformers.
IS:3347	Dimensions for Porcelain Transformer bushing
IS:3637	Gas operated relays
IS:3639	Fitting & Accessories for power transformers
IS:4201	Application guide for CT's
IS:8478	Application guide for On-load tap changer
IS:10028	Code of practice for selection, installation & maintenance of transformers
IS 5561	Electrical Power Connectors
IS 5	Colors for ready mix paints
IS:335	Insulating oil
IS 6272	Industrial cooling fans
IS 12615	Three phase induction motors
IS/IEC 60034	Rotating Electrical Machines. (e.g. For Cooler Fan Motors.)
IS/IEC 60071	Co-ordination of Insulation.
IS 16227/IEC 61869	Current Transformers.
IS 8468/ IEC 60214	On Load Tap Changers
IS2026-7/IEC 60076-7	Loading Guide for Oil-Immersed Power Transformers.
IS 2026-8 /IEC 60076-8	Application Guide for Power Transformers.
IS 2026-10/IEC 60076-10	Determination of Transformer Sound Levels.

IS/IEC 60529	Degrees of Protection Provided by Enclosures (IP Code).
IS/IEC 60947	Low-Voltage Switchgear and Control gear.
IS/IEC 60137	Bushing for alternating voltage above 1000V
IS:1271/IEC 60085	Thermal evaluation and classification of electrical insulation
IEC 60076	Power transformers.
IEC 60156	Method for Determination of the Electric Strength for Insulating Oils.
IEC 60296	Specification for Unused Mineral Insulating Oils for Transformers and Switchgear.
IEC 60445	Basic& Safety principles for man-machine interface, marking and identification, Identification of Equipment Terminals and conductor terminals
BS 148	Determination of Transformer and Reactor Sound Levels.
BS 223	Application Guide for Power Transformers.
BS 2562	Terminal and Tapping Markings for Power Transformers.
	Indian Electricity Rules
	Indian Electricity Act
	CBIP manual

In the event of direct conflict between various order documents, the precedence of authority of documents shall be as follows -

i. Guaranteed Technical Particulars (GTP)

ii. This Specification

iii Indian Standards / IEC standards

iv Approved Vendor Drawings

iv. Other documents

3.0 Major Design Criteria & Parameters of the Transformer

Sr No	Description	Data by purchaser
3.1	Voltage variation on supply side	+ / - 10 %
3.2	Frequency variation on supply side	+/ - 5 %
3.3	Transient condition	- 20 % or + 10 % combined variation of voltage and frequency
3.4	Service Condition	Refer Annexure B

3.5	Insulation level	Class A
3.6	Location of equipment	Generally Outdoor but may be located indoor also with poor ventilation
3.7	Reference design ambient temperature	50 deg C
3.8	Type	Oil immersed, core type, step down
3.9	Type of cooling	ONAN
3.10	Reference standard	IS 2026/IS 1180
3.11	No. of phases	3
3.12	No. of windings per phase	2
3.13	Rated frequency (Hz)	50 Hz
3.14	Highest system voltage HV side	12 kV
3.15	Highest system voltage LV side	460 volt
3.16	Lightning Impulse withstand voltage , kV peak	
3.16.1	For nominal system voltage of 11 kV	75
3.17	Power Frequency Withstand Voltage kV rms	
3.17.1	For nominal system voltage of 11 kV	28
3.17.2	For nominal system voltage of 415 V	3
3.18	Clearances Phase to Phase , mm	
3.18.1	For nominal system voltage of 11 kV	180
3.18.2	For nominal system voltage of 415 V	25
3.19	Clearances Phase to Earth , mm	
3.19.1	For nominal system voltage of 11 kV	120
3.19.2	For nominal system voltage of 415 V	25
3.20	System Fault Level , HV side	350 MVA
3.21	System Fault Level , LV side	35 MVA
3.22	System earthing	
3.22.1	HV	Solidly earthed
3.22.2	LV	Solidly earthed
3.23	Ratings	250/400/630/1000/1600/2000 kVA

3.24	Percentage Impedance at 75 deg C	
3.24.1	250/400/630 kVA	4.5 % with IS tolerance
3.24.2	1000 kVA	5.0 % with IS tolerance
3.24.3	1600/2000 kVA	6.25% with IS tolerance
3.25	Max Total losses(No Load+ Load Losses at 75ºC) at 50% of the rated load , kW	
3.25.1	250 kVA	0.98
3.25.2	400 kVA	1.225
3.25.3	630 kVA	1.86
3.25.4	1000 kVA	2.79
3.25.5	1600 kVA	4.2
3.25.6	2000 kVA	5.05
3.26	Max Total losses(No Load+ Load Losses at 75ºC) at 100% of the rated load , kW	
3.26.1	250 kVA	2.93
3.26.2	400 kVA	3.45
3.26.3	630 kVA	5.3
3.26.4	1000 kVA	7.7
3.26.5	1600 kVA	11.8
3.26.6	2000 kVA	15
3.27	Phase CT Ratio , Amp	
3.27.1	250 kVA	400/5
3.27.2	400 kVA	600/5
3.27.3	630 kVA	1000/5
3.27.4	1000 kVA	1500/5
3.27.5	1600 kVA	2500/5
3.27.6	2000 kVA	3000/5
3.28	HV cable size for all sizes / Conductor size	11 kV (E) grade , A2XCEWY 3C x 150 sqmm

3.29	Busbar size on HV side for cable termination, mm x mm	50x10-Aluminium/Tinned Copper
3.30	LV cable size, 650 /1100 V grade , A2XY cable single core 630 sqmm unarmoured (approx cable dia 40 mm)/ A2XY Cable single core 1000sqmm(Approx dia. 48mm)	Cable
3.30.1	250 kVA	1 runs per phase + 1 runs in Neutral
3.30.2	400 kVA	2 runs per phase + 2 runs in Neutral
3.30.3	630 kVA	3 runs per phase + 2 runs in Neutral
3.30.4	1000 kVA	4 runs per phase + 3 runs in Neutral
3.30.5	1600 KVA	6 runs per phase + 3 runs in Neutral-single core 630 sqmm 3 runs per phase + 2 runs in Neutral-single core 1000 sqmm
3.30.6	2000 kVA	7 runs per phase + 4 runs in Neutral-single core 630 sqmm 4 runs per phase + 3 runs in Neutral-single core 1000 sqmm
3.31	Busbar size on LV side for cable termination, mm x mm	
3.31.1	250/400/630 kVA	
3.31.1.1	Phase	100 x 12-Tinned Copper/Alumium
3.31.1.2	Neutral	100 x 12-Tinned Copper/Alumium
3.31.2	1000kVA	
3.31.2.1	Phase	100 x 12-Tinned Copper 2 runs 100 x 12-Aluminium
3.31.2.2	Neutral	100 x 12-Tinned Copper 2 runs 100 x 12-Aluminium
3.31.3	1600kVA	
3.31.3.1	Phase	160 x 12-Tinned Copper 2 runs 160 x 12-Aluminium

3.31.3.2	Neutral	160 x 12-Tinned Copper 2 runs 160 x 12-Aluminium
3.31.4	2000kVA	
3.31.4.1	Phase	2 runs 100 x 12-Tinned Copper 2 runs 160 x 12-Aluminium
3.31.4.2	Neutral	2 runs 100 x 12-Tinned Copper 2 runs 160 x 12-Aluminium
3.32	Maximum Overall Dimension Acceptable (length x width x height), mm x mm x mm	
3.32.1	250 KVA	1500 x1300x 1700
3.32.2	400 kVA	1500X1500X2000
3.32.3	630 kVA	1700X1700X2200
3.32.4	1000 kVA	1900X1900X2500
3.32.5	1600 kVA	2300X2000X2600
3.32.6	2000 kVA	2500X2000X2600
3.33	Short Circuit withstand Capacity of the transformer	
3.33.1	Three phase dead short circuit at secondary terminal with rated voltage maintained on the other side	For 3 secs.
3.33.2	Single phase short circuit at secondary terminal with rated voltage maintained on other side	For 3 secs.
3.34	Overload Capability	As per IS 2026/IEC 60905
3.35	Noise Level	400/630/1000/1600/2000 KVA- 56/57/58/60/61 Db respectively
3.36	Radio Influence Voltage	Maximum 250 microvolt

3.37	Harmonic suppression	Transformer to be designed for suppression of 3rd, 5th, 7th harmonic voltages and high frequency disturbances.
3.38	Partial Discharge	Transformer to be free from partial discharge upto 120 % of rated voltage as the voltage is reduced from 150 % of rated voltage i.e. there shall be no significant rise above background level
3.39	Tappings	Off Circuit taps on HV winding , +10% to - 10% in steps of 2.5 % , change of taps by externally operated switch
3.39.1	Rotary tap switch operating voltage	11 kV
3.39.2	Rotary tap switch current rating, Amp.	
3.39.2.1	250 KVA	20 Amps
3.39.2.2	400 kVA	60 Amp
3.39.2.3	630 / 1000 kVA	100 Amp
3.39.2.4	1600/2000 kVA	150 Amp

4.0 Construction & Design

4.1	Type	Double Copper wound, three phase, oil immersed, with ONAN cooling, with off circuit tap changer
4.2	**Major Parts**	
4.2.1	**Tank**	
4.2.1.1	Type	Non sealed type with conservator as per manufacturer's standard.
4.2.1.2	Material of Construction	Robust mild steel plate without pitting and low carbon content
4.2.1.3	Plate Thickness	Adequate for meeting the requirements of pressure and vacuum type tests as per IS
4.2.1.4	Welding features	i) All seams and joints shall be

		double welded ii) All welding shall be stress relieved for sheet thickness greater than 35 mm iii) All pipes, radiators, stiffeners, welded to the tank shall be welded externally
4.2.1.5	Tank features	i) Adequate space at bottom for collection of sediments ii) Stiffeners provided for rigidity and designed to prevent accumulation of water iii) No internal pockets in which gas/air can accumulate iv) No external pocket in which water can lodge v) Tank bottom with welded skid base vi) Tank cover sloped to prevent retention of rain water vii) Minimum disconnection of pipe work and accessories for cover lifting viii) Tanks shall be of a strength to prevent permanent deformation during lifting , jacking, transportation with oil filled. ix) Tank to be designed for oil filling under vacuum x) Tank cover fitted with lifting lug xi) Tank cover bent at all the ends xii) Minimum disconnection of pipe work and accessories for cover lifting
4.2.1.6	Flanged type adequately sized	i) HV line bushing

	inspection cover rectangular in shape required for	ii) LV line bushing iii) LV neutral bushing iv) Core / Winding
4.2.1.7	Fittings and accessories on main tank	See under fittings and accessories.
4.2.2	**Conservator for the main tank**	
4.2.2.1	Capacity	Adequate between highest and lowest visible levels to meet the requirement of expansion of oil volume in the transformer and cooling equipment from minimum ambient temperature to maximum operating temperatures.
4.2.2.2	Conservator oil preservation system	Conventional
4.2.2.3	Conservator features	i) Conservator shall be bolted into position so that it can be removed for cleaning / other maintenance purposes ii) Main pipe from tank shall project about 20 mm above conservator bottom for creating a sump for collection of impurities iii) Conservator minimum oil level corresponding to minimum temperature shall be well above the sump level. iv) Conservator to main tank piping shall be supported at minimum two points.

4.2.2.4	Fittings and accessories on main tank conservator	i) Prismatic oil gauge with MINIMUM, NORMAL and MAXIMUM marking ii) End Cover iii) Oil Filling Hole with cap iv) Silica Gel Dehydrating Breather with oil seal and dust filter with clear acrylic single piece clearly transparent cover resistant to UV rays(1kg). Breather shall be of Flanged type in circular shape with 4 no.holes of ½ inches with hardware of M10 bolts. Silica gel shall be of round ball type of 2.5mm dia. v) Drain Plug vi) Air release plug as required vii) Pressure/ Vacuum gauge viii) Magnetic Oil Gauge with LOW LEVEL ALARM
4.2.3	**Radiators**	Detachable type
4.2.3.1	Thickness	Minimum 1.2 mm
4.2.4.2	Features	With lifting lugs, air release plug,
4.2.5	**Core**	
4.2.5.1	Material	High grade , non ageing, low loss, high permeability, grain oriented, cold rolled silicon steel lamination. Core shall be low loss of 1Watt/kG (max)
4.2.5.2	Grade	Premium Grade minimum M3 or better
4.2.5.3	Lamination thickness	0.23 mm Max.
4.2.5.4	Design Flux Density at rated conditions at principal tap	As per Manufacturer design.
4.2.5.5	Maximum Flux Density at 12.5 % over	1.9 T

	excitation / over fluxing	
4.2.5.6	Core Design Features	i) Core shall be in the form of step and stack in three limb format. Note: Wound core shall not be acceptable ii) Magnetic circuit designed to avoid short circuit paths within core or to the earthed clamping structures iii) Magnetic circuit shall not produce flux components at right angles to the plane of lamination to avoid local heating iv) Least possible air gap and rigid clamping for minimum core loss and noise generation v) Adequately braced to withstand bolted faults on secondary terminals without mechanical damage and damage/ displacement during transportation and positioning. vi) Percentage harmonic potential with the maximum flux density under any condition limited to avoid capacitor overloading in the system vii) All steel sections used for supporting the core shall be thoroughly sand blasted after cutting , drilling, welding viii) Provision of lifting lugs for core coil assembly ix) Supporting framework designed not to obstruct complete drainage of oil from transformer

4.2.6	**Winding**	
4.2.6.1	Material	Electrolytic Copper
4.2.6.2	Maximum Current Density allowed	3 Amp per sq mm at all taps.
4.2.6.3	Winding Insulating material	Class A , non catalytic, inert to transformer oil, free from compounds liable to ooze out, shrink or collapse.
4.2.6.4	Winding Insulation	Uniform
4.2.6.5	Design features	i) Type of winding a. LV: Sprial/Helical b. HV: Crossover/Disc Note: Foil winding shall not be acceptable ii) Stacks of winding to receive adequate shrinkage treatment iii) Connections braced to withstand shock during transport, switching, short circuit, or other transients. iv) Minimum out of balance force in the transformer winding at all voltage ratios. v) Conductor width on edge exceeding six times its thickness vi) Transposed at sufficient intervals. vii) Coil assembly shall be suitably supported between adjacent sections by insulating spacers + barriers viii) Winding leads rigidly supported , using guide tubes if practicable ix) Winding structure and major insulation not to obstruct free flow of oil through ducts x) Provision of taps as per clause 3.39

4.2.7	**Transformer Oil**	
4.2.7.1	Type	Should be in accordance with specification as per Annex C of this document
4.2.8	**Bushings and Terminations**	
4.2.8.1	Type of HV side bushing	HV bushing should be top mounted. Outdoor, Pocelain, rated voltage and creepage as per 31mm/kV with voltage class of 12kV respectively
4.2.8.2	Type of LV side bushing	LV bushing should be top mounted. Outdoor, Porcelain, rated voltage and creepage as per 31mm/kV with voltage class of 1.1 kV respectively Additional neutral bushing of porcelain outside on top of LT cable box with brass palm connector (as per IS 3347) shall be provided. Connection between the main neutral and additional neutral shall be provided. For extra neutral bushing, protection box shall be provided in order to prevent ingress of water.
4.2.8.2.1	Essential provision for LV side line bushing	It shall be complete with copper palm complete with tinned copper busbar of size shall be as per clause 3.31.
4.2.8.2.2	Essential provision for LV side neutral bushing	In case of neutral bushing the stem and busbar shall be integral without bolted, threaded, brazed joints. Busbar size shall be as per clause 3.31
4.2.8.3	Arcing Horns	Not required
4.2.8.4	Support insulators inside HV cable box if provided	Epoxy resin cast, rated voltage 12 kV
4.2.8.5	Termination on HV side bushing	By bimetallic terminal connectors

		suitable for ACSR/AAAC conductor / Cable connection through cable box with disconnecting link suitable for 11kV(E) grade,A2XFY 3Cx 150sqmm
4.2.8.6	Termination of LV side bushing	By bimetallic terminal connectors suitable for LV Cable size of 650/1100VGrade, A2XY Cable single core 630sqmm (Approx dia 40mm) / A2XY Cable single core 1000sqmm (Approx dia. 48mm) for 1600/2000 KVA.
4.2.8.7	Minimum creepage distance of all bushings and support insulators.	31mm/KV
4.2.8.8	Protected creepage distance	At least 50 % of total creepage distance
4.2.8.9	Continuous Current rating	Minimum 20 % higher than the current corresponding to the minimum tap of the transformer
4.2.8.10	Rated thermal short time current	25 times the rated current for 2 sec
4.2.8.11	Atmospheric protection for clamp and fitting of iron and steel	Hot dip galvanizing as per IS 2633
4.2.8.12	Bushing terminal lugs in oil and air	Tinned copper
4.2.8.13	Sealing washers /Gasket ring	Nitrile cork rubber(RC70C)/ Expanded TEFLON(PTFE) as applicable.
4.2.9	**HV & LV cable box**	Required
4.2.9.1	Material of Construction	Sheet Steel min. 2.5 mm thick
4.2.9.2	Cable entry	At bottom through detachable gland plate with cable clamps of non magnetic material
4.2.9.3	Cable size for HV	11 kV (E) grade , A2XFY 3C x 150 sqmm
4.2.9.4	Cable size for LV	LV cable size, 650 /1100 V grade, A2XY cable single core 630 sqmm

		unarmoured (approx cable dia 40 mm) / A2XY Cable single core 1000sqmm (Approx dia. 48mm) for 1600/2000 KVA.
4.2.9.5	Cable size for LV Neutral	LV cable size, 650 /1100 V grade, A2XY cable single core 630 sqmm unarmoured (approx cable dia 40 mm) / A2XY Cable single core 1000sqmm (Approx dia. 48mm) for 1600/2000 KVA.
4.2.9.6	Detachable Gland Plate material for HV, LV, LV Neutral box	i) MS for HV cable box ii) Al for LV cable box.
4.2.9.7	Gland plate thickness for HV, LV, LV Neutral box	i) 3 mm for HV side cable box ii) 5 mm for LV cable box.
4.2.9.8	Cable gland for HV cables	Nickel plated brass double compression weatherproof cable gland
4.2.9.9	Cable lug for HV, LV, LV Neutral cables	i) Double hole Aluminium lugs for LV & Neutral side ii) Single hole Aluminum lugs for HV side
4.2.9.10	Essential parts	i) Flange type removable front cover with handles min two nos. ii) Tinned Copper Busbar of adequate size for Purchaser's cable termination with busbar supports iii) Earthing boss for the cable box iv) Earthing link for the gasketted joints at two point for each joint v) Earthing provision for cable Armour/ Screen vi) Flanged type inspection cover on top for bushing inspection and maintenance with handle vii) Drain plug viii) Rainhood on gasketted vertical joint ix) Danger / caution plate

4.2.9.11	Terminal Clearances	700mm, Minimum
4.2.9.12	Termination height required for cable termination	1000mm, Minimum
4.2.10	**Current Transformers**	
4.2.10.1	Provision	On all three phases on LV side
4.2.10.2	Mounting	On LV side bushings on all three phases with the help of fibre glass mounting plate affixed to main tank by nut bolt arrangement
4.2.10.3	Maintenance requirements	Replacement should be possible by removing fixing nut of mounting plate after removal of LT cable without disturbing LT bushing
4.2.10.4	Accuracy Class	0.5
4.2.10.5	Burden	10VA
4.2.10.6	Type	Resin Cast Ring type suitable for outdoor use.
4.2.10.7	CT ratio	
	250 KVA	400/5
	400kVA	600/5
	630kVA	1000/5
	1000kVA	1500/5
	1600kVA	2500/5
	2000kVA	3000/5
4.2.10.8	**CT terminal Box**	
4.2.10.8.1	Size	650 mm height x 750 mm width x 275 mm depth.
4.2.10.8.2	Fixing of instrument / meters within box	On slotted channel 40 x 12 mm size, channel fixed on vertical slotted angle 40 x 40 mm size at two ends
4.2.10.8.3	No of horizontal channels to be provided	Four
4.2.10.8.4	Fixing of terminals within the box	On horizontal slotted channel with the

		help of C channel available with the terminals
4.2.10.8.5	Location	On tank wall
4.2.10.8.6	Box door design	Openable from outside with antitheft hinge, padlock facility, door fixed by stainless steel allen screw M6 size , door shall have canopy for rain protection
4.2.10.8.7	Terminal strip	Nylon 66 material, minimum 4 sq mm, screw type for control wiring and potential circuit.
4.2.10.8.8	Cables and wires	PVC insulated, extruded PVC inner sheathed, armoured, extruded PVC outer sheathed 1100 V grade control cable as per latest edition of IS 1554 part 1 minimum 2.5 sq mm for signals and 4 sq mm for CT with multi strand copper conductor
4.2.10.8.9	Cable Glands	Nickel plated brass double compression weatherproof cable gland
4.2.10.8.10	Lugs on wires	Tinned copper pre insulated Pin, Ring, Fork type as applicable
4.2.10.8.11	Potential signal in CT box	i) Tapped from main LV busbar ii) Neutral Link and Fuse to be provided by bidder for PT
4.2.10.8.12	Essential provision	Wiring diagram to be fixed on the back of door along with CT spec. on Aluminum engraved plate fixed by rivet.
4.2.11	**Off Circuit tap Switch**	
4.2.11.1	Range /Step	Off circuit taps on HV winding, +10% to -10% in steps of 2.5%, change of taps by externally operated switch.
4.2.11.2	Type	Rotary type, 3 pole gang operated,

		draw out type
4.2.11.3	Operating Voltage	11kV
4.2.11.4	Rated Current for tap Switch	i) 400 kVA - 60 Amps ii) 630/1000 kVA - 100 Amps iii) 1600/2000kVA-150 Amps
4.2.11.5	Operating Handle	External at suitable height to be operated from ground level.
4.2.11.6	Essential provision	Tap position indicator, direction changing facility, locking arrangement, and caution plate metallic fixed by rivet.
4.2.12	**Pressure Relief Device**	
4.2.12.1	Type	Pressure Relief Valve (PRV)
4.2.12.2	Auxiliary contacts	2 NO
4.2.13	**Winding and Oil Temperature scanner**	Required
4.2.13.1	PT 100 sensor	For measurement of Oil temperature LV winding temperature.
4.2.13.2	No of potential free trip contacts	2 NO
4.2.13.3	No of potential free alarm contacts	2 NO
4.2.13.4	Auxiliary Supply	240 AC, Single phase, 50Hz. Tapped from LV side busbar through a MCB located inside box.
4.2.13.5	Communication port	RS 485 port for interfacing with FRTU on Modbus protocol. Battery/Super capacitor for data transmission to SCADA in the event of Auxiliary supply fail
4.2.13.5	Fixing of instrument	On side wall of tank
4.2.14	**Auxiliary Relay (hand reset type)**	Required to identify the type of fault/indication.
4.2.14.1	Quantity	4 no's Separate auxiliary relay to be provided for PRV, MOG,WTI/OTI,

		Buchholz relay.
4.2.14.2	Potential free contacts	2 NO
4.2.14.3	Auxiliary supply	240V AC
4.3	**Hardware**	
4.3.1	External	Hot dip galvanized bolts
4.3.2	Internal	Cadmium plated except special hardware for frame parts and core assembly as per manufacturer's design
4.4	**Gasket**	
4.4.1	For Transformer , surfaces interfacing with oil like inspection cover etc.	Nitrile cork rubber RC70C grade
4.4.2	For Cable boxes, Marshalling box, etc.	Neoprene rubber based/ cork nitrile
4.5	**Valves**	
4.5.1	Material of construction	Brass / gun metal
4.5.2	Type	Both end flanged gate valve / butterfly valve depending on application
4.5.3	Size	As per manufacturer's standard
4.5.4	Essential provision	Position indicator, locking rod, padlocking facility, valve guard, cover plate.
4.6	**Cable routing on Transformer**	Control cables for accessories on transformer tank shall be routed through perforated GI trays
4.6.1	Control cable specification	PVC insulated, extruded PVC inner sheathed, armoured, extruded PVC outer sheathed 1100 V grade control cable as per latest edition of IS 1554 part 1 minimum 2.5 sq mm for signals and 4 sq mm for CT with multi strand copper conductor
4.6.2	Specification of wires to be used inside marshalling box.	PVC insulated multi-strand flexible copper wires of minimum 2.5 sq mm size, 1100 V grade as per latest edition

		of relevant IS
4.7	**Terminal Blocks to be used by the vendor**	Nylon 66 material, minimum 4 sq mm, Stud type screw driver operated type for control wiring and potential circuit.
4.7.1	Essential provision for CT terminals	Sliding link type disconnecting terminal block Stud type screwdriver operated with facility for CT terminal shorting material of housing melamine/ Nylon66
4.8	**Cable glands to be used by the vendor**	Nickel plated brass double compression weatherproof cable gland
4.9	**Cable lugs to be used by the vendor**	
4.9.1	For power cables	Long barrel medium duty Aluminium lug with knurling on inside surface.
4.9.2	For Control Cable	Tinned copper pre insulated Pin, Ring, Fork type as applicable
4.10	**Painting of transformer, Radiator, marshalling box for CT, cable boxes etc.**	
4.10.1	Surface preparation	By 7 tank pretreatment process or shot blasting method
4.10.2	Finish on internal surfaces of the transformer	Bright Yellow heat resistant and oil resistant paint two coats. Paint shall neither react nor dissolve in hot transformer insulating oil.
4.10.3	Finish on inner surface of the CT terminal box, HV/LV/LVN cable box	White Polyurethane paint anti condensation type two coats , minimum dry film thickness 80 microns
4.10.4	Finish on outer surface of the transformer, radiator, CT terminal box, HV/LV/LVN cable box	Battle ship Grey shade 632 Polyurethane paint two coats, minimum dry film thickness 80 microns
4.10.5	Frame parts	Battle ship grey shade 632 IS 5, 80 micron minimum insulating oil resistant

		paint. Paint shall neither react nor dissolve in hot transformer insulating oil.

5.0 Fittings and Accessories on Transformer

5.1	Rating and Diagram Plate	Required
5.1.1	Material	Anodized aluminum 16SWG
5.1.2	Background	SATIN SILVER
5.1.3	Letters, diagram & border	Black
5.1.4	Process	Etching
5.1.5	Rating and Diagram Plate details	Following details shall be provided on rating and diagram plate as a minimum i) type/kind of transformer with winding material ii) standard to which it is manufactured iii) manufacturer's name; iv) transformer serial number; v) month and year of manufacture vi) rated frequency in Hz vii) rated voltages in kV viii) number of phases ix) rated power in kVA x) type of cooling (ONAN) xi) rated currents in A xii) vector group connection symbol xiii) 1.2/50µs wave impulse voltage withstand level in kV xiv) power frequency withstand voltage in kV xv) impedance voltage at rated current and frequency in percentage at principal, minimum and maximum tap xvi) Max. Total losses at 50 % rated

		load xvii) Max. Total losses at 100 % rated load xviii) Load loss at 50% & 100% rated load xix) No-load loss at rated voltage and frequency xx) Energy efficiency level. xxi) continuous ambient temperature at which ratings apply in deg C xxii) top oil and winding temperature rise at rated load in deg C; xxiii) winding connection diagram with taps and table of tapping voltage, current and power xxiv) transport weight of transformer xxv) weight of core and windings xxvi) Weight of core xxvii) Weight of winding xxviii) total weight xxix) volume of oil xxx) weight of oil xxxi) name of the purchaser xxxii) PO no and date xxxiii) Guarantee period
5.2	Terminal marking Plate for Bushing, anodized aluminium black lettering on satin silver background both inside cable boxes near termination and on cable box cover (all fixed by rivet)	Required
5.3	Company Monogram Plate fixed by rivet	Required
5.4	Lifting Lug to lift complete	Required

	transformer with oil	
5.5	Lifting lug for top cover	Required
5.6	Lashing Lug	Required
5.7	Jacking Pad with Haulage hole to raise or lower complete transformer with oil	Required
5.8	Detachable Bidirectional flat roller Assembly	Required
5.8.1	Roller center to center distance	Minimum 900 mm on the side of HV and LV cable box Maximum 800 mm on the other side (perpendicular to HV, LV cable box).
5.8.2	Essential provision	Roller dia 150 mm min., roller to be fixed in such a way so that the lowermost part of the skid is above ground by at least 100 mm when the transformer is installed on roller.
5.9	Pockets for ordinary thermometer on tank cover with metallic identification plate fixed by rivet.	Required
5.10	Drain valve (gate valve) for the main tank with cork above ground by 150mm minimum with padlocking and valve guard with metallic identification plate fixed by rivet.	Required
5.11	Filter valve (gate valve) at top with padlocking and valve guard with metallic identification plate fixed by rivet.	Required
5.12	Air Release Plug on tank cover with metallic identification plate fixed by rivet.	Required
5.13	Earthing pad on tank for	Required

	transformer earthing complete with non ferrous nut ., bolt, washers, spring washers etc. with metallic identification plate fixed by rivet	
5.14	Rainhood for vertical gasketted joints , in cable boxes, Conservator	Required Not required as per Annexure A Scope of supply
5.15	Earthing bridge by copper strip jumpers on all gasket joints at at least two points for electrical continuity	Required
5.16	Skid base welded type with haulage hole	Required
5.17	Core , Frame to tank Earthing	Required
5.18	Danger plate made of Anodized aluminum with white letters on red background on Transformer, cable boxes (all fixed by rivet)	Required
5.19	Caution plate for Off Circuit tap changer fixed by rivet.	Required
5.20	MOG with auxiliary contact wired upto Terminal Box	Required
5.21	Buchholz relay for transformer above 1000kVA	Required
5.22	Pressure relief valve	Required
5.23	WTI & OTI Temperature Scanner	Required
5.24	Auxiliary relays (4 no's)	Required
5.25	LT cable support-By aluminium clamp fixed on the on MS bracket of size 50x 10 supported from the tank wall shall be provided .	Required
5.26	HT cable support-By GI clamp fixed on the on MS bracket of size 50x 10 supported from the tank wall shall	Required

	be provided.	

6.0 Approved make of components

6.1	CT	Pragati / ECS / Kappa/Mehru/Continental/Nortex
6.2	Bushings	Baroda Bushing/Jaipur glass/CJI
6.3	Tap Changer	Alwaye /Paragon
6.4	MOG	Sukrut/Atvus
6.5	Valves	Newman/ATAM
6.6	CRGO	Nippon/JFE/Posco/Thyson kkurup
6.7	Copper	Birla copper/Sterlite
6.8	Pre compressed Pressboard	Raman Board, Mysore/ Senapathy Whiteley
6.9	Laminated Wood	Permalli Wallance / Rochling Engineers
6.10	Oil	Apar/Savita/Raj Petro/Gandhaar
6.11	Steel	TATA/Jindal/SAIL
6.12	Lugs/Glands	Jainson/Dowells/Comet
6.13	Radiators	CTR/Hi-Tech Radiators /Tarang Engineers
6.14	WTI/OTI	Precimeasure/ Pecon
6.15	Buchholz Relay	Sukrut/Atvus
6.16	Auxiliary Relay	GE/Alstrom

Note – Any other make of component offered by the bidder maybe reviewed & approved by purchaser

7.0 Quality assurance

7.1	Quality Assurance program	To be submitted before contract award. Program shall contain following i) The structure of the organization ii) The duties and responsibilities assigned to staff ensuring quality of work. iii) The bidder should have qualified technical & dedicated QA

		personnel at various stages of manufacture & testing. iv) Factory inspection of bidder may be carried out to ascertain the quality system and process in place at manufacturing facility. The same is applicable to bidders not approved with BSES. v) The system for purchasing, taking delivery and verification of materials vi) The system for ensuring quality of workmanship vii) The system for control of documentation viii) The system for the retention of records ix) The arrangements for the Supplier's internal auditing x) A list of the administration and work procedures required to achieve and verify Contract's quality requirements. These procedures shall be made readily available to the Purchaser for inspection on request
7.2	Quality Plan	To be submitted by the successful bidder for approval. Plan shall contain following as a minimum i) An outline of the proposed work and programm sequence ii) The structure of the Supplier's organisation for the contract iii) The duties and responsibilities assigned to staff ensuring quality of work for the contract iv) Inspection Hold and notification points mutually agreed. v) Submission of engineering documents required by the specification vi) The inspection of materials and components on receipt vii) Reference to the Supplier's work

		procedures appropriate to each activity viii) Inspection during fabrication/ construction ix) Final inspection and test x) Successful bidder shall include submittal of Mills invoice, Bill of lading, Mill's test certificate for grade, physical tests, dimension, specific watt loss per kG for the core material to the purchaser for verification in the quality plan suitably
7.3	Manufacturing Quality Assurance Plan	Refer Annexure D

8.0 Progress Reporting

8.1	Outline Document	To be submitted for purchaser approval for outline of production, inspection, testing, packing, dispatch, documentation programme
8.2	Detailed Progress report	To be submitted to Purchaser once a month containing i) Progress on material procurement ii) Progress on fabrication iii) Progress on assembly iv) Progress on internal stage inspection v) Reason for any delay in total programme vi) Details of test failures if any in manufacturing stages vii) Progress on final box up viii) Constraints ix) Forward path

9.0 Inspection & testing

9.1	Inspection and Testing during manufacture	Only type tested equipment shall be acceptable
9.1.1	Tank and Conservator	i) Check correct dimensions between wheels demonstrate turning of wheels through 90 deg and further dimensional check.

		ii) Check for physical properties of materials for lifting lugs, jacking pads etc. All load bearing welds, including lifting lug welds shall be subjected to iii) required load tests. iv) Leakage test of the conservator. v) Certification of all test results. vi) Oil leakage test . vii) Vacuum and Pressure test on tank as type test as per IS
9.1.2	Core	i)
9.1.2.1	Mother Core coil	Verification & inspection of the mother coil at port & putting stamp & seal may be inspected by BSES.
9.1.2.2	Core sample type testing	Reconciliation of mother coil by checking stamp & seal at factory before slitting. One sample of CRGO to be sealed for testing at ERDA/CPRI. Following Tests shall be conducted on the sample per P.O. i) Specific core loss measurement ii) Magnetic polarization iii) Magnetic permeability iv) Specific core loss measurement after accelerated ageing test v) Surface insulation resistivity vi) Electrical resistivity measurement vii) Stacking factor viii) Ductility(Bend test) ix) Lamination thickness x) Magnetization characteristics (B-H curve)
9.1.2.3	Core cutting	Bidder should have in house core cutting facility for proper monitoring & control on quality. In case it is done outside cutting shall be done in presence of BSES.
9.1.2.4	Core physical verification	i) Check on the quality of varnish if used on the stampings. a) Measurement of thickness and hardness of varnish on stampings. b) Solvent resistance test to check that varnish does not react in hot oil. c) Check over all quality of varnish by sampling to ensure uniform hipping colour, no bare spots. No ever burnt

		varnish layer and no bubbles on varnished surface. ii) Check on the amount of burns. iii) Bow check on stampings. iv) Check for the overlapping of stampings. Corners of the sheet are to be apart. v) Visual and dimensional check during assembly stage. vi) Check on complete core for measurements of iron-loss and check for any hot spot by exciting the core so as to induce the designed value of flux density in the core. vii) Check for inter laminar insulation between core sectors before and after pressing. viii) Visual and dimensional checks for straightness and roundness of core, thickness of limbs and suitability of clamps. ix) High voltage test (2 KV for one minute) between core and clamps. Certification of all test results.
9.1.2.5	Documents verification	Following documents to be submitted during the stage inspection i) Invoice of supplier ii) Mills test certificates iii) Packing list iv) Bill of lading v) Bill of entry certificates by customs
9.1.3	Insulating Materials	i) Sample check for physical properties of materials. ii) Check for dielectric strength. iii) Visual and dimensional checks. iv) Check for the reaction of hot oil on insulating materials. v) Certification of all test results.
9.1.4	Windings	i) Sample check on winding conductor for mechanical properties and electrical conductivity. ii) Visual and dimensional check on conductor for scratches, dept. mark etc. iii) Sample check on insulating paper for

		PE value, Bursting strength, Electric strength. iv) Check for the reaction of hot oil on insulating paper. v) Check for the bending of the insulating paper on conductor. vi) Check and ensure that physical condition of all materials taken for winding is satisfactory and free of dust. vii) Check for absence of short circuit between parallel strands. viii) Check for Brazed joints wherever applicable. ix) Measurement of voltage ratio to be carried out when core/ yoke is x) completely restocked and all connections are ready. xi) Certification of all test results.
9.1.4.1	Checks before drying process	i) Check conditions of insulation on the conductor and between the windings. ii) Check insulation distance between high voltage connection distance between high voltage connection cables and earthed and other live parts. iii) Check insulation distance between low voltage connection and earthed and other parts. iv) Insulation test of core earthing. v) Check for proper cleanliness vi) Check tightness of coils i.e. no free movement. vii) Certification of all test results.
9.1.4.2	Checks during drying process	i) Measurement and recording of temperature and drying time during vacuum treatment. ii) Check for completeness of drying. iii) Certification of all test results.
9.1.5	Oil sample testing	One sample of oil drawn from every lot of transformer offered for inspection should be tested at CPRI/ERDA lab for tests as listed under Table-1 of IS:1866 (2000). The cost of this testing should be included within the

		cost of transformer.
9.1.6	Test on fittings and accessories	As per manufacturer's standard
9.2	Routine tests	The sequence of routine testing shall be as follows i) Visual and dimension check for completely assembled transformer ii) Measurements of voltage ratio iii) Measurements of winding resistance at principal tap and two extreme taps. iv) Vector Group and polarity test v) Measurements of insulation resistance* vi) Separate sources voltage withstand test. vii) Measurement of iron losses and exciting current at rated frequency and 90%, 100% and 110% rated voltage. viii) Induced voltage withstand test. ix) Load losses measurement at 50 % & 100 % of load. x) Impedance measurement of principal tap (HV and LV) of the transformer. xi) Routine test of tanks xii) Induced voltage withstand test (to be repeated if type tests are conducted). xiii) Measurement of Iron loss (to be repeated if type test are conducted). xiv) Measurement of capacitance and Tan Delta for transformer winding and Tan Delta for transformer oil (for all transformers). xv) Ratio of CT xvi) Oil leakage test on completely assembled transformer xvii) Magnetic balance test xviii) Power frequency voltage withstand test on all auxiliary circuits xix) Certification of all test results. xx) Temperature Rise Test # Note: a) *Insulation resistance measurement

		shall be carried out at 5kV for HV and 1kV for LV. Value of IR should not be less than 1000 Mohms. Polarization Index (PI = IR_{10min}/IR_{1min}) should not be less than 1.5 (If one minute IR value is above 5000 Mohms and it is not be possible to obtain an accurate 10 minutes reading, in such cases polarization index can be disregarded as a measure of winding condition.) b) #Temperature rise test may be necessary to be carried one unit/lot. Purchaser's engineer, will at its discretion, select transformer for temp. rise test from any lot offered for inspection at manufacturer's works and witness the same for comparison with ERDA/CPRI type test results c) BSES may appoint recognized testing authority like CPRI /ERDA lab with their instruments & engineer's team and measure no load loss, load loss and percentage impedance of the transformer at supplier's works at our own cost. Bidder shall agree and give them full co-operation during their stay & testing at shop floor. The losses & impedance values so obtained will be considered as final.
9.3	Acceptance test at NABL lab	Bidder should have in-house NABL accredited testing facility. In case of unavailability of same, one Transformer of each rating shall be randomly selected and sealed by BSES Representative for complete acceptance test as per IS 1180 (including temperature test) at third party NABL Lab. Tests shall be conducted once per Rate contract.
9.4	Type Tests	On one transformer of each rating and type at CPRI/ERDA. i) Impulse withstand test on all three HV limbs of the transformers for chopped wave as per standard ii) Temperature rise test as per IS iii) Dissolved gas analysis before and after Temperature Rise Test

		iv) Pressure and Vacuum test on tank v) Note – Purchaser may choose to carry out short circuit, impulse & temperature rise test on one unit from a lot offered from inspection at CPRI/ERDA
9.5	Special Tests	On one transformer of each rating and type i) Dynamic & Thermal (3 sec) Short Circuit Test as per IS 2026 ii) Measure of zero seq. impedance (Cl. 16.10 IS 2026 Part I). iii) Measurement of acoustic noise level (Cl. 16.12 of IS 2026 Part I). iv) Measurement of harmonic level on no load current. v) Paint adhesion test. vi) High voltage withstand test shall be performed on the auxiliary equipment and wiring after complete assembly. Cost of such tests, if extra, shall be quoted separately by the Bidder.
9.6	Notification to bidders	In case bidder had conducted type & special tests from CPRI/ERDA on BSES design and there is no design change in the transformer less than 10 years from the date of the bid opening, then bidder need not to conduct the type test from CPRI/ERDA lab. The bidder shall submit the under taking that there is no change in design with respect to type tested design.
		The product offered must be of type tested quality. In case the product offered is never type & special tested the same (as per above clause 9.4.& 9.5), is to be conducted by bidder at his own cost at CPRI/ERDA
9.7	Customer Hold Point	i) GTP & Drawings approval ii) Core Inspection(See Cl No 9.1.2) Sample to be tested at CPRI/ERDA for each lot. iii) Tank Pressure & vacuum Test

		iv) Core & Coil Stage inspection of each lot to be offered for final testing.

10.0 Packing , Shipping, Handling and Storage

10.1	Packing	
10.1.1	Packing protection	Against corrosion, dampness, heavy rains, breakage and vibration
10.1.2	Packing for accessories and spares	Robust wooden non returnable packing case with all the above protection
10.1.3	Packing details	On each packing case details required as follows i) Individual serial number; ii) Purchaser's name; iii) PO number; iv) Destination; v) Supplier's name; vi) Name and address of supplier's agent vii) Description and quantity viii) Manufacturer's name ix) Country of origin x) Case measurements xi) Gross and net weights in kilograms xii) All necessary slinging and stacking instructions.
10.2	Shipping	i) The bidder shall ascertain at an early date and definitely before the commencementof manufacture, any transport limitations such as weights, dimensions, road culverts, overhead lines, free access etc. from the manufacturing plant to the project site; and furnish to the Purchaser confirmation that the proposed packages can be safely transported, as normal or oversize packages, upto the plant site. ii) Any modifications required in the infrastructure and cost thereof in this connection shall be brought to the notice of the Purchaser

10.3	Handling and Storage	As per manufacturer's instruction

11.0 Deviations

Deviations from this Specification shall be stated in writing with the tender by reference to the Specification clause/GTP/Drawing and a description of the alternative offer. In absence of such a statement, requirements of the Specification shall be met without exception.

12.0 Drawings& Data Submission Matrix

Drawing submission shall be as per the matrix given below. All documents/ drawing shall be provided on A3/A4 sheet in box file with separators for each section. PDF shall also be provided of all documents via USB. Deviation sheet and GTP shall be provided in excel sheet.Language of the documents shall be English only. Deficient/ improper document/ drawing submission may liable for rejection.

S.no	Documents to be submitted	With the bid	After Award	
			For Approval	Prior to dispatch
1	Copy of specification along with company seal & signature on each page.	✓	✓	
2	Guaranteed technical particulars	✓	✓	
3	Outline dimension drawing for each major component, general arrangement drawing showing component layout an general schematic diagrams.	✓	✓	
4	Type test certificates, where available, and sample routine test reports	✓	✓	
5	Detailed reference list of customers already using equipment offered during the last 5 years with particular emphasis on units of similar design and rating	✓		
6	Details of manufacturers quality assurance standard and programme and ISO 9000 series or equivalent national certification.	✓		
7	Deviations from this specification. Only deviations approved in writing before award of contract shall be accepted.	✓		
8	Recommended spare parts and consumable items for the five years of operation with prices and spare	✓		

S.no	Documents to be submitted	With the bid	After Award	
			For Approval	Prior to dispatch
	parts catalogue with price list for future requirements.			
9	Transport / shipping dimension and weights, space required for handling parts for maintenance	✓		
10	Write up on oil preservation system.		✓	✓
11	Quality assurance program.	✓	✓	
12	Programme for production and testing		✓	
13	General description of the equipment and all components, including brochures		✓	
14	Detailed dimension drawing for all components ,general arrangement drawing showing detailed component layout and detailed schematic and wiring drawings for all components like marshalling box and OTI/WTI scanner, PRV, Buchhloz relay. Auxiliary relays		✓	
15	Calculations to substantiate choice of electrical, structural, mechanical component size, ratings		✓	
16	Detailed loading drawing to enable the purchaser to design and construct foundations for the transformer.		✓	
17	Transport /shipping dimension with weights ,wheel base details, untanking height etc.		✓	
18	Terminal arrangements and cable box details		✓	
19	Flow diagram of cooling system showing no. of cooling banks		✓	
20	Drawings of major components like bushing,CT, OTI/WTI Scanner, PRV, Buchholz relay, Auxiliary relays, Valves, radiators etc		✓	
21	Lists of makes of all fittings and accessories		✓	
22	Statement drawing attention to all exposed points in the equipment at which contact with or in close proximity to other metals and stating clearly what protection is employed to prevent corrosion at each point		✓	

S.no	Documents to be submitted	With the bid	After Award	
			For Approval	Prior to dispatch
23	Detailed installation and commissioning instructions			✓
24	Inspection and test reports carried out in manufacturers works			✓
25	Test certificates of all bought out items. and catalogues			✓
26	Operation and maintenance instructions as well as trouble shooting charts.			✓

Annexure A Scope of supply

1.0 The scope of supply shall include following

1.1 Design, manufacture, assembly, testing at stages of manufacture as per Cl. 9 of this specification, final testing at manufacturer works on completely assembled transformer before dispatch, packing, transportation, delivery and submission of all documentation for the Power transformer with all accessories as below

Sr. No	Description	Scope of Supply
1.1.1	Fully assembled transformer with all major parts like conservator, Radiators, CT box, Fittings and accessories as per Clause 5.0 of this specification	YES
1.1.2	Off circuit tap changer as per this specification	YES
1.1.3	HV, LV, cable boxes	YES
1.1.4	Support steel material for support of cable boxes from ground	YES

1.1.5	Foundation Bolts for complete transformer	YES
1.1.6	Support structure to support of cable from the transformer tank	YES
1.1.7	Nickel Plated brass double compression glands for HV and LV, LVN cables (in case of termination by cable)	YES
1.1.8	Long barrel medium duty Aluminium lugs for power cables (in case of termination by cable)	YES
1.1.9	Nickel Plated brass double compression glands and tinned copper lugs for control cable termination in CT box for vendor's cables	YES
1.1.10	Cables and wires for transformer accessories and internal wiring of CT box	YES
1.1.11	Touch up paint, minimum 2 litres	YES
1.1.12	Extra Transformer oil 10 % in non returnable drums	YES
1.1.13	One spare complete set of gaskets	YES
1.1.14	Routine testing as per Cl. 9.2 & 9.3 of this specification	YES
1.1.15	Type testing as per Cl. 9.4 of this specification	YES
1.1.16	Special testing as per Cl. 9.5 of this specification	YES
1.1.17	Submission of Documentation as detailed below	YES

Annexure B Service Conditions

1.0.0	Delhi Atmospheric conditions	
a)	Average grade atmosphere :	Heavily polluted, dry
	Maximum altitude above sea level	1000 M
b)	Ambient Air temperature	Highest 50 deg C, Average 40 deg C
	Design ambient temperature	50 deg C
c)	Relative Humidity	90 % Max
d)	Seismic Zone	4
e)	Rainfall	750 mm concentrated in four months

Annexure C Technical Particulars of transformer oil

Transformer oil shall be new and conform to the following requirements:

1.0 Codes & standards

Latest revision of following codes & standards with all amendments –

	Standard no	Title
1.1	IS 335	New insulating oils
1.2	IS 1783	Drums for oils

2.0 Properties

The insulating material shall have following features

Sr No	Item description	Specification requirement
2.1	**Function**	
2.1.1	Viscosity	
2.1.1.1	Viscosity at 40^0C	15 mm^2/s, Max
2.1.1.2	Viscosity at 0^0C	1800 mm^2/s, Max
2.1.2	Pour Point	- 10^0C, Max
2.1.3	Water content	30 mg/Kg, Max
2.1.4	Breakdown voltage	
2.1.4.1	New unfiltered oil	30 kV, Min
2.1.4.2	After filtration	70 kV, Min
2.1.5	Density at 20^0C	0.895 g/ml, Max
2.1.6	Dielectric dissipation factor at 90^0C	0.005, Max
2.1.7	Particle Content	Manufacturer to specify the data
2.2	**Refining/Stability**	
2.2.1	Appearance of oil	Clear, free from sediment and suspended matter
2.2.2	Acidity	0.01 mg KOH/g, Max
2.2.3	Interfacial tension at 27^0C	0.04 N/m, Min
2.2.4	Total sulphur content	Manufacturer to specify the data
2.2.5	Corrosive sulfur	Not-corrosive
2.2.6	Potentially Corrosive sulfur	Not-corrosive
2.2.7	DBDS	Not detectable (<5 mg/kg)
2.2.8	Inhibitor	Not detectable (<0.01%)
2.2.9	Metal Passivator	Not detectable (<5 mg/kg)
2.2.10	Other additives	Manufacturer to specify the data
2.2.11	2-furfural and related Compounds content	Not detectable (<0.05 mg/kg) for each individual compound
2.3	**Performance**	
2.3.1	Oxidation stability, test duration 164 h	
2.3.1.1	Total acidity	1.2 mg KOH/g, Max
2.3.1.2	Sludge	0.8%, Max
2.3.1.3	DDF at 90^0C	0.5, Max

Sr No	Item description	Specification requirement
2.3.2	Gassing Tendency	Manufacturer to specify the data
2.3.3	ECT	Manufacturer to specify the data
2.4	**Health,safety and Environment**	
2.4.1	Flash point	135^0C, Min
2.4.2	PCA content Max	3%, Max
2.4.3	PCB content	Not detectable (<2 mg/Kg)

Annexure D Manufacturing Quality Assurance Plan

SL NO	CHARACTRISTICS	CLASS	TYPE OF CHECK	QUANTUM OF CHECK	REFERENCE DOCUMENT	ACCEPTANCE NORMS	FORMAT OF RECORD	AGENCY			REMARKS
								S	M	O	
1	2	3	4	5	6	7	8	9			10
A	**RAW Material**										
1	**Winding Conductor (PICC)**										
1.1	Bare Dimensions & Finish of Conductor	Major	Measurement	1 sample per size per lot	IEC 13730 Part 27,IEC 60317,IS 7404,IS 6160,IS 613	IEC 13730 Part 27,IEC 60317,IS 7404,IS 6160,IS 613	Supplier's TC	P	V	R	
1.2	Increase in dimensions due to Paper covering	Major	Measurement	-DO-	-DO-	-DO-	-DO-	P	V	R	
1.3	Resistivity @ 20°C	Major	Electrical	-DO-	-DO-	-DO-	-DO-	P	V	R	
1.4	No of Layers	Critical	Measurement	-DO-	-DO-	-DO-	-DO-	P	V	R	
1.5	Conductor Tensile strength	Critical	Mechanical	-DO-	-DO-	-DO-	-DO-	P	V	R	
1.6	Conductor Elongation	Critical	Mechanical	-DO-	-DO-	-DO-	-DO-	P	V	R	
1.7	% Overlap of Paper	Critical	Mechanical	-DO-	-DO-	-DO-	-DO-	P	V	R	

SL NO	CHARACTRISTICS	CLASS	TYPE OF CHECK	QUANTUM OF CHECK	REFERENCE DOCUMENT	ACCEPTANCE NORMS	FORMAT OF RECORD	AGENCY			REMARKS
								S	M	O	
1	2	3	4	5	6	7	8	9			10
1.8	Corner Radius	Critical	Mechanical	-DO-	-DO-	-DO-	-DO-	P	V	R	
1.9	**Kraft Paper Insulation**										
1.9.1	Thickness	Major	Measurement	1 sample per size per lot	IEC:60554, IS:9335	IEC:60554, IS:9335	Supplier's TC	P	V	R	
1.9.2	Apparent Density	Major	Chemical	-DO-	-DO-	-DO-	-DO-	P	V	R	
1.9.3	Air Permeability	Major	Chemical	-DO-	-DO-	-DO-	-DO-	P	V	R	
1.9.4	Tensile Index (Longitudinal and Transverse)	Major	Mechanical	-DO-	-DO-	-DO-	-DO-	P	V	R	
1.9.5	Electrical Strength in Air	Major	Electrical	-DO-	-DO-	-DO-	-DO-	P	V	R	
1.9.6	Ash Content	Major	Chemical	-DO-	-DO-	-DO-	-DO-	P	V	R	
1.9.7	pH of 5% Aqueous Extract	Major	Chemical	-DO-	-DO-	-DO-	-DO-	P	V	R	
1.9.8	Conductivity of 5% Aqueous Extract	Critical	Chemical	-DO-	-DO-	-DO-	-DO-	P	V	R	
1.9.9	Moisture Content	Major	Chemical	-DO-	-DO-	-DO-	-DO-	P	V	R	
1.9.10	Heat Stability	Major	Chemical	-DO-	-DO-	-DO-	-DO-	P	V	R	
1.9.11	Degree of Polymerization	Major	Chemical	-DO-	-DO-	-DO-	-DO-	P	V	R	

SL NO	CHARACTRISTICS	CLASS	TYPE OF CHECK	QUANTUM OF CHECK	REFERENCE DOCUMENT	ACCEPTANCE NORMS	FORMAT OF RECORD	AGENCY			REMARKS
								S	M	O	
1	2	3	4	5	6	7	8	9			10
1.9.12	Elongation (MD & CMD)	Major	Mechanical	-DO-	-DO-	-DO-	-DO-	P	V	R	
1.9.13	Tear index	Major	Mechanical	-DO-	-DO-	-DO-	-DO-	P	V	R	
2.0	**CRGO Laminations (Watt absorption)**										
2.1	Specific Core Loss	Major	Electrical	Random	IEC 60404, IS 3024, IS 649	IEC 60404, IS 3024, IS 649	Supplier's TC	P	V	R	
2.2	Surface Insulation resistance	Major	Electrical	-DO-	-DO-	-DO-	-DO-	P	V	R	
2.3	Ageing Test	Major	Measurement	-DO-	-DO-	-DO-	-DO-	P	V	R	
2.4	Stacking Factor	Major	Measurement	-DO-	-DO-	-DO-	-DO-	P	V	R	
2.5	Waviness	Major	Measurement	-DO-	-DO-	-DO-	-DO-	P	V	R	
2.6	Edge Burr	Major	Visual	-DO-	-DO-	-DO-	-DO-	P	V	R	
2.7	Sample testing for Checking Specific Core loss, accelerated ageing test, Surface insulation resistivity, AC permeability and magnetization, stacking	Major	Electrical	100%	-DO-	-DO-	--	--	P	W	Sample will be randomly selected by BSES & will be send for testing at CPRI/ERDA

SL NO	CHARACTRISTICS	CLASS	TYPE OF CHECK	QUANTUM OF CHECK	REFERENCE DOCUMENT	ACCEPTANCE NORMS	FORMAT OF RECORD	AGENCY			REMARKS
								S	M	O	
1	2	3	4	5	6	7	8	9			10
	factor, Ductility										lab.
3.12	Core Cutting	Major	Visual	Random	-DO-	-DO-	-DO-	P	W	W	
3.0	**Un-impregnated Laminated Wood**										
3.1	Thickness	Major	Visual	1 sample size / LOT	IS 3513/IEC 61061	IS 3513/IEC 61061	Supplier's TC	P	V	R	
3.2	Density	Major	Chemical	-DO-	-DO-	-DO-	-DO-	P	V	R	
3.3	Moisture Content	Major	Chemical	-DO-	-DO-	-DO-	-DO-	P	V	R	
3.4	Oil Absorption	Major	Chemical	-DO-	-DO-	-DO-	-DO-	P	V	R	
3.5	Cross breaking strength	Major	Mechanical	-DO-	-DO-	-DO-	-DO-	P	V	R	
3.6	Compressive Strength	Major	Mechanical	-DO-	-DO-	-DO-	-DO-	P	V	R	
3.7	Electric Strength in Oil	Major	Electrical	-DO-	-DO-	-DO-	-DO-	P	V	R	
3.8	Shrinkage in oil	Major	Mechanical	-DO-	-DO-	-DO-	-DO-	P	V	R	
3.9	Tensile Strength,compressive strength	Major	Mechanical	-DO-	-DO-	-DO-	-DO-	P	V	R	
4.0	**Press Boards (Pre-compressed)**										

SL NO	CHARACTRISTICS	CLASS	TYPE OF CHECK	QUANTUM OF CHECK	REFERENCE DOCUMENT	ACCEPTANCE NORMS	FORMAT OF RECORD	AGENCY			REMARKS
								S	M	O	
1	2	3	4	5	6	7	8	9			10
4.1	Thickness	Major	Measurement	1 sample/Size/LOT	IEC:60641, IS:1576	IEC:60641, IS:1576	Supplier's TC	P	V	R	
4.2	Tensile Strength (MD & CMD)	Major	Mechanical	-DO-	-DO-	-DO-	-DO-	P	V	R	
4.3	Shrinkage in Air (MD & CMD)	Major	Mechanical	-DO-	-DO-	-DO-	-DO-	P	V	R	
4.4	Moisture Content	Major	Chemical	-DO-	-DO-	-DO-	-DO-	P	V	R	
4.5	Oil Absorption	Major	Chemical	-DO-	-DO-	-DO-	-DO-	P	V	R	
4.6	Electrical Strength in Oil and air	Major	Electrical	-DO-	-DO-	-DO-	-DO-	P	V	R	
4.7	pH of 5% aqueous extract	Major	Chemical	-DO-	-DO-	-DO-	-DO-	P	V	R	
4.8	Conductivity of 5% aqueous extract	Major	Chemical	-DO-	-DO-	-DO-	-DO-	P	V	R	
4.9	Compressibility	Major	Mechanical	-DO-	-DO-	-DO-	-DO-	P	V	R	
4.10	Ash Content	Major	Chemical	-DO-	-DO-	-DO-	-DO-	P	V	R	
4.11	Apparent density	Major	Chemical	-DO-	-DO-	-DO-	-DO-	P	V	R	
4.12	Elongation (MD & CMD)	Major	Mechanical	-DO-	-DO-	-DO-	-DO-	P	V	R	
5.0	**Tank and its**										

SL NO	CHARACTRISTICS	CLASS	TYPE OF CHECK	QUANTUM OF CHECK	REFERENCE DOCUMENT	ACCEPTANCE NORMS	FORMAT OF RECORD	AGENCY			REMARKS
								S	M	O	
1	2	3	4	5	6	7	8	9			10
	accessories										
5.1	Structural steel										
5.1.1	Thickness	Major	Measurement	Random	IS 2062/ IS:1576	IS 2062/ IS:1576	Suppliers TC	P	V	R	
5.1.2	Yield Strength	Major	Mechanical	-DO-	-DO-	-DO-	-DO-	P	V	R	
5.1.3	Tensile Strength	Major	Mechanical	-DO-	-DO-	-DO-	-DO-	P	V	R	
5.1.4	Elongation	Major	Mechanical	-DO-	-DO-	-DO-	-DO-	P	V	R	
5.1.5	Bend test	Major	Mechanical	-DO-	-DO-	-DO-	-DO-	P	V	R	
5.1.6	Chemical composition	Major	Chemical	-DO-	-DO-	-DO-	-DO-	P	V	R	
5.2	**Manufacturing of Tank and accessories**										
5.2.1	Dimension check	Major	Measurement	100%	MFR. Spec/ DRG/BSES approved document	MFR. Spec/ DRG/ BSES approved document	MFR. Fabrication report	P	W	R	
5.2.2	Joint preparation	Major	Measurement	100%	-DO-	-DO-	-DO-	P	V	R	
5.2.3	Assembly and alignment	Major	Visual and measurement	100%	MFR. Spec/ DRG	MFR. Spec/ DRG	MFR. Fabrication report	P	V	R	

SL NO	CHARACTRISTICS	CLASS	TYPE OF CHECK	QUANTUM OF CHECK	REFERENCE DOCUMENT	ACCEPTANCE NORMS	FORMAT OF RECORD	AGENCY			REMARKS
								S	M	O	
1	2	3	4	5	6	7	8	9			10
5.2.4	DP Test on Welds on Load bearing members eg. Jack Pads	Major	DP Test	100%	-DO-	-DO-	-DO-	P	W	R	
5.2.5	Pressure test	Major	Mechanical	On One unit	CBIP	CBIP	Test Report	--	P	W	**STAGE INSPECTION**
5.2.6	Vacuum test	Major	Mechanical	On One unit	CBIP	CBIP	Test Report	--	P	W	**STAGE INSPECTION**
5.2.7	**Leakage test**										
5.2.7.1	Main Unit	Major	Mechanical	100%	MFR. STD	MFR. STD	Test report	P	W	R	
5.2.7.2	Conservator	Major	Mechanical	100%	MFR. STD	MFR. STD	Test report	P	W	R	
5.2.7.3	Pipes	Major	Mechanical	100%	MFR. STD	MFR. STD	Test report	P	W	R	
5.2.8	Surface preparation	Major	Visual	100%	MFR. STD	MFR. STD	MFR. Fabrication report	P	V	R	
5.2.9	Final Paint Coat (including Primer), Thickness & Shade	Major	Measurement	100%	MFR. STD	MFR. STD	Test report	P	V	R	
5.2.10	Paint Peel off test	Major	Visual	100%	MFR. STD	MFR. STD	Test report	--	P	R	

SL NO	CHARACTRISTICS	CLASS	TYPE OF CHECK	QUANTUM OF CHECK	REFERENCE DOCUMENT	ACCEPTANCE NORMS	FORMAT OF RECORD	AGENCY			REMARKS
								S	M	O	
1	2	3	4	5	6	7	8	9			10
6.0	**Bushing/Insulators**										
6.1	Make and rating	Critical	Visual	100%	IS 8603/IS 2099/App.Drg.	IS 8603/IS 2099/App.Drg.	Supplier's TC	P	V	R	
6.2	Visual inspection for surface smoothness, any damage, etc.	Critical	Visual	100%	-DO-	-DO-	-DO-	P	V	R	
6.3	Important dimension including Creepage distance	Major	Measurement	One sample /size / lot	-DO-	-DO-	-DO-	P	V	R/W	
6.4	Dry Power Frequency voltage withstabd test	Major	Electrical	100%	-DO-	-DO-	-DO-	P	V	R	
6.5	Air pressure test in water	Major	Electrical	100%	-DO-	-DO-	-DO-	P	V	R	
6.6	Electro -Tinning	Major	Electrical	100%	-DO-	-DO-	-DO-	P	V	R	
6.7	All routine electrical tests	Major	Electrical	-do-	-do-	-do-	-do-	P	V	R	
7.0	**Magnetic Oil Gauge**										
7.1	Make and dimensions	Major	Physical	100%	App.Drg./ Supplier Catalogue	App.Drg./ Supplier Catalogue	Supplier's TC	P	V	R	
7.2	Test for level (eg at 30°	Major	Mechanical	100%	-DO-	-DO-	-DO-	P	V	R	

SL NO	CHARACTRISTICS	CLASS	TYPE OF CHECK	QUANTUM OF CHECK	REFERENCE DOCUMENT	ACCEPTANCE NORMS	FORMAT OF RECORD	AGENCY			REMARKS
								S	M	O	
1	2	3	4	5	6	7	8	9			10
	Max)										
7.3	Switch contact test	Major	Electrical	100%	-DO-	-DO-	-DO-	P	V	R	
7.4	Leakage test	Major	Mechanical	100%	-DO-	-DO-	-DO-	P	V	R	
7.5	Switch operating and setting	Major	Electrical	100%	-DO-	-DO-	-DO-	P	V	R	
7.6	Di-electric test at 2 KV AC between live terminal and body	Major	Electrical	100%	-DO-	-DO-	-DO-	P	V	R	
8.	**Buchholz relay**										
8.1	Make and type	Critical	Visual	100%	App.Drg./ Supplier Catalogue /IS 3637	App.Drg./ Supplier Catalogue /IS 3637	Supplier's TC	P	V	R	
8.2	Bore size	Major	Measurement	One/size	-DO-	-DO-	-DO-	P	V	R	
8.3	Porosity and element test	Major	Critical	100%	-DO-	-DO-	-DO-	P	V	R	
8.4	Gas volume and surge test	Major	Mechanical	One/Size	-DO-	-DO-	-DO-	P	V	R	
8.5	HV test at 2 KV AC & IR test	Major	Electrical	100%	-DO-	-DO-	-DO-	P	V	R	

SL NO	CHARACTRISTICS	CLASS	TYPE OF CHECK	QUANTUM OF CHECK	REFERENCE DOCUMENT	ACCEPTANCE NORMS	FORMAT OF RECORD	AGENCY			REMARKS
								S	M	O	
1	2	3	4	5	6	7	8	9			10
8.6	Continuity for alarm/Trip	Major	Electrical	100%	-DO-	-DO-	-DO-	P	V	R	
9.0	**Radiator**										
9.1	Dimension, number of sections	Major	Measurement	100%	MFR. DRG	VTD DRG	Supplier's TC	P	V	R	
9.2	Leakage Test with Air	Major	Visual	100%	As per CBIP	As per CBIP	Supplier's TC	P	V	R	
9.3	Paint shade	Major	Visual & Measurement	Random	MFR. Specs /Drg	MFR. Specs /Drg	Supplier's TC	P	V	R	
9.4	Surface Preparation	Major	Measurement	100%	SA 2.5 of ISO 8503/2	SA 2.5 of ISO 8503/2	Supplier's TC	P	V	R	
10	**Off Circuit Tap Changer**										
10.1	Make, Rating and model	Major	Visual	100%	MFR. Spec/ IS 8468 /IEC 214-1989	MFR. Spec/ IS 8468 /IEC 214-1989	Supplier's TC	P	V	R	
10.2	Contact Resistance test	Major	Visual	100%	Supplier's STD	Supplier's STD	Supplier's TC	P	V	R	
10.3	Electrical Routine test	Major	Electrical	100%	IS 8468/ IEC 214	IS 8468/ IEC 214	Supplier's TC	P	V	R	
10.4	Mechanical test on diverter switch including	Major	Mechanical	100%	-DO-	-DO-	-DO-	P	V	R	

SL NO	CHARACTRISTICS	CLASS	TYPE OF CHECK	QUANTUM OF CHECK	REFERENCE DOCUMENT	ACCEPTANCE NORMS	FORMAT OF RECORD	AGENCY			REMARKS
								S	M	O	
1	2	3	4	5	6	7	8	9			10
	pressure test										
10.5	HV test for Auxiliary circuit	Major	Electrical	100%	-DO-	-DO-	-DO-	P	V	R	
10.6	Mechanical test on Tap selector switch with motor drive	Major	Mechanical	100%	-DO-	-DO-	-DO-	P	V	R	
10.7	Pressure test for Oil Compartment	Major	Mechanical test	100%	-DO-	-DO-	-DO-	P	V	R	
11.0	**Transformer Oil**	Major	Testing	One Sample from each lot	Annexure D of BSES spec.	Annexure D of BSES spec.	STC	P	V	R	One sample of oil shall be drawn from **each lot of Transformer** offered for final inspection by BSES representative and same shall be tested at CPRI/ERDA

SL NO	CHARACTRISTICS	CLASS	TYPE OF CHECK	QUANTUM OF CHECK	REFERENCE DOCUMENT	ACCEPTANCE NORMS	FORMAT OF RECORD	AGENCY			REMARKS
								S	M	O	
1	2	3	4	5	6	7	8	9			10
											lab as per relevant std.
12.0	**OTI / WTI Scanner**										
12.1	Make and Model	Critical	Visual	100%	MFR. STD/App. Drg.	MFR. STD/App. Drg.	Suppliers TC	P	P	R	
12.2	Calibration	Major	Electrical	100%	-DO-	-DO-	-DO-	P	P	R	
12.3	Check for alarm & trip signal operation against set value	Major	Electrical	100%	-DO-	-DO-	-DO-	P	P	R	
12.4	HV test	Major	Electrical	100%	-DO-	-DO-	-DO-	P	V	R	
12.5	Switch Setting	Major	Mechanical	100%	-DO-	-DO-	-DO-	P	P	R	
13.0	**Bushing Metal parts**										
13.1	Dimension Checks	Major	Mechanical	100%	MFR. STD /IS 3347	MFR. STD /IS 3347	Supplier's TC	P	V	R	
13.2	Surface Finish	Major	Visual	100%	-DO-	-DO-	-DO-	P	V	R	
14.0	**Current Transformers**										
14.1	Dimensions, make	Major	Measurement	100%	MFR. STD /App. DRG. / IS 2705	MFR. STD /App. DRG. / IS 2705	Supplier's TC	P	P	R	

SL NO	CHARACTRISTICS	CLASS	TYPE OF CHECK	QUANTUM OF CHECK	REFERENCE DOCUMENT	ACCEPTANCE NORMS	FORMAT OF RECORD	AGENCY			REMARKS
								S	M	O	
1	2	3	4	5	6	7	8	9			10
14.2	Rating and terminal marking	Major	Physical	100%	MFR. APPD. DRG	MFR. APPD. DRG	Supplier's TC	P	P	R	
14.3	Measurement of ratio and phase angle error	Major	Electrical	100%	IS 2705	IS 2705	Supplier's TC	P	V	R	
14.4	High Voltage test	Major	Electrical	100%	-DO-	-DO-	-DO-	P	V	R	
14.5	Inter-Turn insulation test	Major	Electrical	100%	-DO-	-DO-	-DO-	P	V	R	
14.6	Polarity	Major	Electrical	100%	-DO-	-DO-	-DO-	P	V	R	
14.7	Knee point voltage	Major	Electrical	-do-	-do-	-do-	-do-	P	V	R	Only for Class-PS NCT
14.8	Excitation current	Major	Electrical	-do-	-do-	-do-	-do-	P	V	R	Only for Class-PS NCT
14.9	Secondary winding resistance	Major	Electrical	-do-	-do-	-do-	-do-	P	V	R	Only for Class-PS NCT
15.0	**Valves/ Butterfly valves**										
15.1	Make & operation	Critical	Visual	100%	APP.drg./MFR. STD/IS 778	APP.drg./MFR. STD/IS 778	Supplier's TC	P	P	R	
15.2	Leakage test for body	Major	Mechanical	100%	-DO-	-DO-	-DO-	P	P	R	

SL NO	CHARACTRISTICS	CLASS	TYPE OF CHECK	QUANTUM OF CHECK	REFERENCE DOCUMENT	ACCEPTANCE NORMS	FORMAT OF RECORD	AGENCY			REMARKS
								S	M	O	
1	2	3	4	5	6	7	8	9			10
15.3	Leakage test for top spindle	Major	Mechanical	100%	-DO-	-DO-	-DO-	P	P	R	
15.4	Mounting dimensions	Major	Measurement	100%	-DO-	-DO-	-DO-	P	P	R	
15.5	Material of Body & Seat	Major	Chemical & measurement	1 sample per lot	-DO-	-DO-	-DO-	P	V	R	
16.0	**Pressure relief Valve/Device**										
16.1	Make	Critical	Visual	100%	MFR. STD/ App. Drg.	MFR. STD/ App. Drg.	-DO-	P	P	R	
16.2	Operating pressure	Major	Mechanical	100%	-DO-	-DO-	-DO-	P	P	R	
16.3	Switch Contact test	Major	Electrical	100%	-DO-	-DO-	-DO-	P	P	R	
16.4	Mounting dimensions	Major	Measurement	100%	-DO-	-DO-	-DO-	P	V	R	
16.5	HV test between body & terminal	Major	Electrical	100%	-DO-	-DO-	-DO-	P	V	R	
17.0	**Gasket**										
17.1	Appearance & Finish	Major	Mechanical	1 sample per size per lot	IS 4253-II, 1980/IS 3400	IS 4253-II, 1980/IS 3400	Supplier's TC	P	V	R	
17.2	Hardness, IRHD	Major	Mechanical	-DO-	-DO-	-DO-	-DO-	P	V	R	
17.3	Tensile Strength	Major	Mechanical	-DO-	-DO-	-DO-	-DO-	P	V	R	

SL NO	CHARACTRISTICS	CLASS	TYPE OF CHECK	QUANTUM OF CHECK	REFERENCE DOCUMENT	ACCEPTANCE NORMS	FORMAT OF RECORD	AGENCY			REMARKS
								S	M	O	
1	2	3	4	5	6	7	8	9			10
17.4	Compressibility	Major	Mechanical	-DO-	-DO-	-DO-	-DO-	P	V	R	
17.5	Compression set	Major	Mechanical	-DO-	-DO-	-DO-	-DO-	P	V	R	
17.6	Flexibility	Major	Mechanical	-DO-	-DO-	-DO-	-DO-	P	V	R	
18.0	**Silica gel Breather with oil seal**										
18.1	Type / model/weight	Major	Visual	100%	MFR. STD /DRG	MFR. STD /DRG	Supplier's TC	P	V	R	
18.2	Color of Gel	Major	Visual	100%	-DO-	-DO-	-DO-	P	V	R	
19	**Control cubicle/CT terminal Box**										
19.1	Dimensions	Major	Measurement	100%	BSES Approved document	BSES Approved document	Supplier's TC	P	V	R	
19.2	Hi-voltage test at 2kV RMS for one minute	Major	Electrical	-DO-	-DO-	-DO-	-DO-	P	V	R	
19.3	Insulation resistance at 5000 V DC	Major	Electrical	-DO-	-DO-	-DO-	-DO-	P	V	R	
19.4	Verification of component & Fittings	Major	Visual	-DO-	-DO-	-DO-	-DO-	P	V	R	

SL NO	CHARACTRISTICS	CLASS	TYPE OF CHECK	QUANTUM OF CHECK	REFERENCE DOCUMENT	ACCEPTANCE NORMS	FORMAT OF RECORD	AGENCY			REMARKS
								S	M	O	
1	2	3	4	5	6	7	8	9			10
19.5	Wiring check	Major	Visual	-DO-	-DO-	-DO-	-DO-	P	V	R	
19.6	Welding, grinding, chipping	Major	Visual	--DO-	-DO-	-DO-	-DO-	P	V	R	
19.7	Paint	Major	Visual	-DO-	-DO-	-DO-	-DO-	P	V	R	
B	**In Process**										
1	**Winding(LV and HV)**										
1.1	Check for Visual, physical and dimensional Parameters and no. of parallel conductors.										
1.1.1	Measurement of axial height, OD & ID& current density calculation.	Major	Measurement	100%	MFR. Data/Drg/BSES approved document	MFR. Data/Drg/BSES approved document	QC report/Test report	--	P	W	
1.1.2	Copper Conductor size (Bare & covered)	Major	Measurement	100%	-DO-	-DO-	-DO-	--	P	W	
1.1.3	No. of Turns / Disc	Major	Measurement	100%	-DO-	-DO-	-DO-	--	P	R	
1.2	Winding height	Major	Measurement	100%	-DO-	-DO-	-DO-	--	P	W	

SL NO	CHARACTRISTICS	CLASS	TYPE OF CHECK	QUANTUM OF CHECK	REFERENCE DOCUMENT	ACCEPTANCE NORMS	FORMAT OF RECORD	AGENCY			REMARKS
								S	M	O	
1	2	3	4	5	6	7	8	9			10
1.3	Visual inspection of Brazed joints as applicable	Major	Visual	100%	-DO-	-DO-	-DO-	--	P	R	
1.4	Tap Leads termination in case of tap winding	Major	Visual	100%	-DO-	-DO-	-DO-	--	P	R	
1.5	Current density calculation	--	--	--	--	--	--	--	P	W	
1.6	**Weight**	Major	Visual	100%	-DO-	-DO-	-DO-	--	P	W	
2.0	**Core Assembly**										
2.1	Visual & Key Dimensional check										
2.1.1	Diagonal distance	Major	Measurement	100%	MFR.Drg/BSES approved document	MFR.Drg/BSES approved document	QC report/Test report	--	P	W	
2.1.2	Window centre distance	Major	Measurement	100%	-DO-	-DO-	-DO-	--	P	W	
2.1.3	Window height	Major	Measurement	100%	-DO-	-DO-	-DO-	--	P	W	
2.2	Stack Thickness	Major	Measurement	100%	-DO-	-DO-	-DO-	--	P	W	
2.3	High Voltage test at 2 KV AC for I min between core & core clamp, Yoke	Major	Electrical	100%	-DO-	-DO-	-DO-	--	P	W	

SL NO	CHARACTRISTICS	CLASS	TYPE OF CHECK	QUANTUM OF CHECK	REFERENCE DOCUMENT	ACCEPTANCE NORMS	FORMAT OF RECORD	AGENCY			REMARKS
								S	M	O	
1	2	3	4	5	6	7	8	9			10
	bolt										
2.4	Pre-Core loss measurement	Major	Electrical	100%	-DO-	-DO-	-DO-	--	P	W	
2.5	Weight	Major	Visual	100%	-DO-	-DO-	-DO-	--	P	W	
3.0	**Core-Coil Assembly**										
3.1	Top & Bottom insulation arrangement	Major	Visual	100%	MFR.Data /DRG/BSES approved document	MFR.Data /DRG/BSES approved document	QC report	--	P	R	
3.2	Lead arrangement	Critical	Visual	100%	-DO-	-DO-	-DO-	--	P	R	
3.3	Tap & Lead End Brazing & Insulation	Critical	Visual	100%	-DO-	-DO-	-DO-	--	P	R	
3.4	Dimension of Coil After Shrinkage	Major	Measurement	100%	-DO-	-DO-	-DO-	--	P	R	
3.5	Verification of Major electrical clearances	Major	Visual & Measurement	100%	-DO-	-DO-	-DO-	--	P	R	
3.6	HV/LV Connection	Major	Visual	100%	-DO-	-DO-	-DO-	--	P	R	
3.7	Cleanliness	Major	Visual	100%	-DO-	-DO-	-DO-	-	P	R	
4.0	**Core-Coil Assembly**										

SL NO	CHARACTRISTICS	CLASS	TYPE OF CHECK	QUANTUM OF CHECK	REFERENCE DOCUMENT	ACCEPTANCE NORMS	FORMAT OF RECORD	AGENCY			REMARKS
								S	M	O	
1	2	3	4	5	6	7	8	9			10
	Before Ovening										
4.1	Initial Ratio test	Major	Measurement	100%	-DO-	-DO-	-DO-	--	P	R	
5.0	**Core-coil assembly during drying**										
5.1	Measurement & recording of temperature & drying time during vacuum treatment.	Major	Visual	100%	MFR.Data /DRG	MFR.Data /DRG	QC report	--	P	R	
5.2	Check for completeness of drying	Major	Visual	100%	MFR.Data /DRG	MFR.Data /DRG	QC report	--	P	R	
5.3	Certification of all test	Major	Visual	100%	MFR.Data /DRG	MFR.Data /DRG	QC report	--	P	R	
6.0	**Core-Coil Assembly After Ovening**										
6.1	Ratio Test,Vector Group & Magnetic Balance test	Major	Electrical	100%	-DO-	-DO-	QC report /Test report	--	P	W	
6.2	Recording of time/Temp, Vacuum	Major	Measurement	100%	-DO-	-DO-	-DO-	--	P	R	
6.3	Record of Moisture extract	Major	Measurement	100%	MFR. STD	MFR. STD	QC report	--	P	R	

SL NO	CHARACTRISTICS	CLASS	TYPE OF CHECK	QUANTUM OF CHECK	REFERENCE DOCUMENT	ACCEPTANCE NORMS	FORMAT OF RECORD	AGENCY			REMARKS
								S	M	O	
1	2	3	4	5	6	7	8	9			10
6.4	Verification of completeness & Drying	Major	Verify	100%	MFR. STD	MFR. STD	QC report	--	P	R	
6.5	Insulation resistance measurement by Megger	Major	Electrical	100%	MFR. STD	MFR. STD	Test report	--	P	R	
6.6	Earthing connection	Major	Visual	-DO-	MFR. STD	MFR. STD	QC Report	--	P	R	
7.0	**Tanking**										
7.1	Electrical clearance arrangement	Major	Measurement	100%	MFR. DRG	MFR. DRG	QC report	--	P	R	
7.2	Verification of Core-Frame Clamping arrangement	Major	Visual	100%	-DO-	-DO-	-DO-	--	P	R	
7.3	Core to frame insulation resistance test & HV test at 2 KV for min	Major	Electrical	100%	-DO-	-DO-	-DO-	--	P	R	
8.0	**Final Assembly for testing**										
8.1	Fittings of external accessories	Major	Visual	100%	MFR. STD /DRG	MFR. STD /DRG	Job Card	--	P	R	
8.2	Internal Oil leakage test on main unit	Major	Visual	100%	CBIP	CBIP	QC report	--	P	R	

SL NO	CHARACTRISTICS	CLASS	TYPE OF CHECK	QUANTUM OF CHECK	REFERENCE DOCUMENT	ACCEPTANCE NORMS	FORMAT OF RECORD	AGENCY			REMARKS
								S	M	O	
1	2	3	4	5	6	7	8	9			10
8.3	Oil filtration & pressure test	Major	Visual	-DO-	IS 1180	IS 1180	-DO-	-	P	R	
C	**Final testing**										
1	**Routine Test**										
1.1	Voltage Ratio test and check of phase displacement	Major	Electrical	100%	IS 2026/IS 1180	IS 2026/IS 1180	Test Report	--	P	W	
1.2	Winding Resistance at all tap corrected to 75°C	Major	Electrical	100%	IS 2026/IS 1180	IS 2026/IS 1180	Test report	--	P	W	
1.3	No Load Loss & Current @90%,100%&112.5% of rated voltage	Major	Electrical	100%	IS 2026/IS 1180	IS 2026/IS 1180	Test report	--	P	W	To be repeated after type test.
1.4	Impedance Voltage/Short Circuit Impedance(Principal Tap)	Major	Electrical	100%	IS 2026/IS 1180	IS 2026/IS 1180	Test report	--	P	W	
1.5	Load Loss measurement at 50% and 100% of load @Principal, Max, MinTap	Major	Electrical	100%	IS 2026/IS 1180	IS 2026/IS 1180	Test report	--	P	W	

SL NO	CHARACTRISTICS	CLASS	TYPE OF CHECK	QUANTUM OF CHECK	REFERENCE DOCUMENT	ACCEPTANCE NORMS	FORMAT OF RECORD	AGENCY			REMARKS
								S	M	O	
1	2	3	4	5	6	7	8	9			10
1.6	Induced over voltage	Major	Electrical	100%	IS 2026/IS 1180	IS 2026/IS 1180	Test report	--	P	W	To be repeated after type test
1.7	Separate Source Voltage Test	Major	Electrical	100%	IS 2026/IS 1180	IS 2026/IS 1180	Test report	--	P	W	
1.8	Insulation Resistance &PI(10 min / 1 min)	Major	Electrical	100%	--	--	Test report	--	P	W	IR shall be more than 2000 MΩ PI Shall be more than1.5
1.9	Voltage Vector Relationship & Polarity	Major	Electrical	100%	IS 2026/IS 1180	IS 2026/IS 1180	Test report	--	P	W	
1.10	Magnetic Balance Test	Major	Electrical	100%	IS 2026/IS 1180	IS 2026/IS 1180	Test report	--	P	W	
1.11	Oil leakage test on transformer with complete fitting and accessories	Major	Visual	100%	CBIP	CBIP	Test report	--	P	W	
1.12	Polarity check & Ratio Test of LVWTI CT/	Major	Electrical	100%	IS 2026/IS 1180	IS 2026/IS 1180	Test report	--	P	W	

SL NO	CHARACTRISTICS	CLASS	TYPE OF CHECK	QUANTUM OF CHECK	REFERENCE DOCUMENT	ACCEPTANCE NORMS	FORMAT OF RECORD	AGENCY			REMARKS
								S	M	O	
1	2	3	4	5	6	7	8	9			10
	Metering CT										
1.13	BDV test on Transformer Oil	Major	Electrical	100%	IS 2026/IS 1180	IS 2026/IS 1180	Test report	--	P	W	
1.14	Power frequency withstand on auxiliary circuit	Major	Electrical	100%	IS 2026/IS 1180	IS 2026/IS 1180	Test report	--	P	W	
1.15	Heat Run Test (Temp. Rise Test)	Major	Testing	One Unit (each lot)	IS 2026/IS 1180	IS 2026/IS 1180	Test Report	--	P	W	
1.16	Pressure relief device test	Major	Testing	One Unit (each lot)	MFR. STD	MFR. STD	Test Report	--	P	W	
1.17	Visual and dimensional check	Major	Visual	100%	Approved drawings	Approved drawings	Test Report	--	P	W	
1.18	Measurement of Cap & tandelta of Wdg, Oil and HV bushing	Major	Electrical	One unit	--	--	Test report	--	P	W	
1.19											
2.0	**Type test (One unit of each type and rating of Transformer at CPRI/ERDA)**										
2.1	Heat Run Test (Temp. Rise Test)	Major	Testing	One Unit	IS 2026	IS 2026	Test Report	**CPRI/ERDA**			

SL NO	CHARACTRISTICS	CLASS	TYPE OF CHECK	QUANTUM OF CHECK	REFERENCE DOCUMENT	ACCEPTANCE NORMS	FORMAT OF RECORD	AGENCY			REMARKS
								S	M	O	
1	2	3	4	5	6	7	8	9			10
2.2	Dynamic & Thermal (3 sec) Short Circuit Test	Major	Testing	One Unit	IS 2026	IS 2026	Test Report	**CPRI/ERDA**			
2.3	Impulse withstand Test on all HV & LV Limb for Chopped wave.	Major	Testing	One Unit	IS 2026	IS 2026	Test Report	**CPRI/ERDA**			
2.4	DGA Test Before & After temperature rise	Major	Testing	One Unit	Relevant std.	Relevant std.	Test Report	**CPRI/ERDA**			Test shall be conducted once per PO
3.0	**Special Test (One unit of each type and rating of Transformer)**										
3.1	Zero Phase Sequence Test	Major	Testing	One Unit	IS 2026	IS 2026	Test Report	--	P	W	
3.2	Noise Level Test	Major	Testing	One Unit	NEMA TR-1	NEMA TR-1	Test Report	--	P	W	
3.3	No Load Harmonic Test	Major	Testing	One Unit	IS 2026	IS 2026	Test Report	--	P	W	
3.4	HV Test on all auxiliary equipment and wiring after complete assembly	Major	Testing	One Unit	--	--	Test Report	--	P	W	
D	**Dispatch & Packing**										
1.1	Identification & packing	Major	Visual	100%	As per packing list	As per packing list	Packing List	--	P	--	

SL NO	CHARACTRISTICS	CLASS	TYPE OF CHECK	QUANTUM OF CHECK	REFERENCE DOCUMENT	ACCEPTANCE NORMS	FORMAT OF RECORD	AGENCY			REMARKS
								S	M	O	
1	2	3	4	5	6	7	8	9			10
1.2	Check for proper Packing	Major	Visual	100%	As per packing list	As per packing list	Packing List	--	P	--	
1.3	Visual check before dispatch	Major	Visual	100%	As per packing list	As per packing list	Packing List	--	P	--	

Note:

- Transformer from each lot may be opened for core and winding verification. BSES approval is be taken prior to opening the transformer.
- Type Test shall be valid for 10 years.

All IS and IEC standards with their latest revisions/amendments shall be applicable

LEGEND:

S: Supplier
M: Main Contractor (Manufacturer)
O: Owner (BSES)

P - Perform
V - Verify
R – Review
W- Witness

Schedule A Guaranteed Technical Particulars (Data by Seller)

Sr.	Particulars	Specified / Required	Offered
1.0	General		
1.1	Make		
1.2	Type	Oil immersed, core type, step down located generally outdoor but may be located indoor also with poor ventilation. Bidder shall confirm full rating available in indoor location also	
2.0	Nominal Continuous Rating, KVA		
2.1	HV winding	250/400/630/1000/1600/2000kVA	
2.2	LV winding	250/400/630/1000/1600/2000kVA	
3.0	Rated voltage (kV)		
3.1	HV Winding	11 kV	
3.2	LV Winding	415 volt	
4.0	Rated current (Amps)	250/400/630/1000/1600/2000kVA	
4.1	HV Winding		
4.2	LV Winding		
5.0	Connections		
5.1	HV Winding	Delta	
5.2	LV Winding	Star with neutral	
5.3	Vector Group reference	Dyn11	
6.0	Impedance at principal tap rated current and frequency, ohm @75 deg C		
6.1	Impedance	4.5%/4.5% / 4.5%/ 5.0/6.25/6.25 % with IS tolerance	
6.2	Reactance		
6.3	Resistance		
6.4	X/R ratio		
6.5	Impedance at lowest tap at rated		

	current and frequency		
6.6	Impedance at highest tap at rated current and frequency		
7.0	Resistance of the winding at 75^0 C in ohm		
7.1	a) HV		
7.2	b) LV		
8.0	Zero sequence impedance in ohm		
8.1	a) HV		
8.2	b) LV		
9.0	Guaranteed maximum Total losses at principal tap at 75°C, kW		
9.1	50 % of Load	as per Spec Cl 3.25	
9.2	100% of Load	as per Spec Cl 3.26	
9.3	No Load Loss (Max)		
9.4	Total I^2R losses of windings @ 75 deg C, KW		
9.5	Total stray loses @ 75 deg C, KW		
9.6	Total Load losses (Max.), KW		
9.7	No load loss at maximum permissible voltage and frequency (approx.),kW		
10.0	Temperature rise over reference ambient of 40 ^{0}C		
10.1	Top oil by thermometer ^{0} C	40 ^{0}C	
10.2	Winding by resistance^0 C	45 ^{0}C	
11.0	Efficiency		
11.1	Efficiency at 75^0C and unity power factor %		
11.1.1	at 110% load		
11.1.2	at 100% load		
11.1.3	at 80% load	Not Less than 99.5%	
11.1.4	at 60% load		
11.1.5	at 40% load		

11.1.6	at 20% load		
11.2	Efficiency at 75^0C and 0.8 power factor lag %		
11.2.1	at 110% load		
11.2.2	at 100% load		
11.2.3	at 80% load		
11.2.4	at 60% load		
11.2.5	at 40% load		
11.2.6	at 20% load		
11.3	Maximum efficiency at 75^0C %		
11.4	Load and power factor at which it occurs		
12.0	Regulation , (%)		
12.1	Regulation at full load at 75^0 C		
12.1.1	at unity power factor		
12.1.2	at 0.8 power factor lagging		
12.2	Regulation at 110% load at 75^0 C		
12.2.1	at unity power factor		
12.2.2	at 0.8 power factor lagging		
13.0	Tappings		
13.1	Type		
13.2	Capacity		
13.3	Range-steps x % variation		
13.4	Taps provided on HV winding (Yes / No)		
13.5	Rated current of rotary switch		
14.0	Cooling system		
14.1	Type of cooling	ONAN	
14.2	No. of cooling unit Groups		
14.3	Capacity of cooling units		
14.4	Mounting of radiators		
14.5	Number of Radiators		
14.8	Total radiating surface , sqmm		
14.9	Thickness of radiator tubes, mm	Minimum 1.2 mm	

15.0	Details of Tank		
15.1	Material	Robust mild steel plate without pitting and low carbon content	
15.2	Thickness of sides mm		
15.3	Thickness of bottom mm		
15.4	Thickness of cover mm		
15.5	Confirmation of Tank designed and tested for Vacuum, Pressure (Ref: CBIP Manual) , (Yes/ No)		
15.5.1	Vacuum mm of Hg. / (kN/m^2)	As per IS	
15.5.2	Pressure mm of Hg.		
15.6	Is the tank lid sloped?	Yes	
15.7	Inspection cover provided (Yes / No)	as per spec	
15.8	Location of inspection cover (Yes / No)		
15.9	Min. dimensions of inspection cover (provide list of all inspection cover with dimension), mm x mm		
16.0	Core		
16.1	Type:	Core	
16.2	Core material grade	Premium grade minimum M3 or better	
16.3	Core lamination thickness in mm		
16.4	Insulation of lamination	With insulation coating on both sides	
16.5	Design flux density at rated condition at principal tap, Tesla		
16.6	Maximum flux density at 12.5 % overexcitation /overfluxing, Tesla	1.9 Tesla Max allowed	
16.7	Equivalent cross section area mm^2		

16.8	Guaranteed No Load current at 100% rated voltage , Amps		
16.8.1	HV		
16.8.2	LV		
16.9	Guaranteed No Load current At 110% rated voltage, Amps		
16.9.1	HV		
16.9.2	LV		
17.0	Type of Winding		
17.1	HV		
17.2	LV		
17.3	Conductor material	Electrolytic Copper	
17.4	Current density (HV/LV)	Maximum allowed 3.0 A per sq mm at all taps	
17.5	Gauge/area of cross section of conductor		
17.5.1	a) HV		
17.5.1	b) LV		
17.6	Insulating material		
17.6.1	HV Turn		
17.6.2	LV Turn		
17.6.3	LV Core		
17.6.4	HV - LV		
17.7	Insulating material thickness, mm		
17.7.1	HV Turn		
17.7.2	LV Turn	-	
17.7.3	LV to Core		
17.7.4	HV to LV		
18.0	Minimum design clearance, mm		
18.1	HV to earth in Air		
18.2	HV to earth in oil		
18.3	LV to earth in Air		
18.4	LV to earth in oil		
18.5	Between HV & LV in Air		

18.6	Between HV & LV in oil		
18.7	Top winding and yoke		
18.8	Bottom winding and yoke		
19.0	**Insulating oil**		
19.1	Quantity of oil Ltrs		
19.1.1	In the Transformer tank		
19.1.2	In each radiator		
19.1.4	Total quantity		
19.2	10% excess oil furnished?	Yes in separate non returnable drums with each transformer	
19.3	Type of Oil	As per cl 4.2.7	
20.0	**Bushing / Support Insulator**		
20.1	Make	-	
20.2	Type		
20.2.1	HV side	As per Cl. 4.2.8.1 of the spec	
20.2.2	LV side	As per Cl. 4.2.8.2 of the spec	
20.3	Reference Standard		
20.4	Voltage class, kV		
20.4.1	HV side Bushing/ Support Insulator	12 kV	
20.4.2	LV side line and neutral bushing/ Support Insulator	1.1 kV	
20.5	Creepage factor for all bushing / Support Insulator mm/KV	31 mm / kV	
20.6	Rated thermal short time current		
20.6.1	HV bushing	25 times rated current for 2 secs.	
20.6.2	LV line and neutral bushing	25 times rated current for 2 secs.	
20.7	Weight, Kg		
20.7.1	HV bushing		
20.7.2	LV line and neutral bushing		
20.8	Free space required for bushing removal, mm		
20.8.1	HV bushing		
20.8.2	LV line and neutral bushing		

21.0	**Terminal connections**		
21.1	HV	Cable size as per Cl no 3.28	
21.2	LV	Cable size as per Cl no 3.30	
21.3	LV Neutral	Cable size as per Cl no 3.30	
22.0	**HV cable box**	Required	
22.1	Suitable for cable type,size	Cable size as per Cl no 3.28	
22.2	Termination height	750 mm min.	
22.3	Gland plate dimension, mm x mm		
22.4	Gland plate Material	MS	
22.5	Gland plate thickness	3 mm min.	
22.6	Phase to phase clearance inside box,mm	180 mm	
22.7	Phase to earth inside box,mm	120 mm	
23.0	**LV Cable box**	Required	
23.1	Suitable for cable type , size	Cable size as per Cl no 3.30	
23.2	Termination height	1000 mm, min.	
23.3	Gland plate dimension, mmxmm		
23.4	Gland plate material	Aluminium	
23.5	Gland plate thickness	5 mm min.	
23.6	Phase to phase	25 mm	
23.7	Phase to earth	25 mm	
24.0	L.V neutral Cable termination arrangement	Separate cable box not required (LV-N to be provided in LV cable box.)	
25.0	Current Transformer on LV phases		
25.1	Type		
25.2	Make		
25.3	Reference Standard		
25.4	CT Ratio		
25.5	Burden, VA		
25.6	Class of Accuracy		
25.7	CT terminal box size		

26.0	Pressure release device		
26.1	Minimum pressure the device is set to rupture		
26.1.1	For Main Tank		
26.1.2	Alarm and trip contact ratings of protective devices		
27.0	Fittings Accessories Each Transformer furnished as per Clause No 5. (Bidder shall attach separate sheet giving details, make and bill of materials)		
27.1	OTI/WTI Scanner		
27.1.1	Make		
27.1.2	Model no		
27.1.3	Auxiliary supply		
27.1.4	Manual submitted (Yes/No)		
27.2	Buchholz Relay		
27.2.1	Make		
27.2.2	Model no		
27.2.3	Auxiliary supply		
27.2.4	Manual submitted (Yes/No)		
27.3	Auxiliary relays for Fault/indication identification (PRV, Buchholz relay, MOG)		
27.3.1	Make		
27.3.2	Model no		
27.3.3	Auxiliary supply		
27.3.4	Potential free contacts		
27.3.5	Manual submitted (Yes/No)		
28.0	Painting: as per clause for the transformer, cable boxes, radiator, Marshalling box (Yes/No)		
29.0	Max over all transformer dimensions	**As per Clause 3.32**	

29.1	Length, mm		
29.2	Breadth, mm		
29.3	Height, mm		
30.0	Transformer Tank Dimensions		
30.1	Length, mm		
30.2	Breadth, mm		
30.3	Height, mm		
31.0	Weight data		
31.1	Core, kG		
31.2	Frame parts, kG		
31.3	Core and frame, kG		
31.4	Total Winding, kG		
31.5	Core , Frame, Winding, kG		
31.6	Tank, kG		
31.7	Tank lid, kG		
31.8	Empty conservator tank, kG		
31.9	Each radiator empty, kG		
31.10	Total weight of all radiators empty, kG		
31.11	Weight of oil in Tank, kG		
31.12	Weight of oil in Conservator, kG		
41.13	Weight of oil in each Radiators, kG		
31.14	Total weight of oil in Radiators, kG		
31.16	Total Transport weight of the transformer, kG		
32.0	Volume Data		
32.1	Volume of oil in main tank, litres		
32.2	Volume of oil between highest and lowest levels of main conservator, litres		
32.4	Volume of oil in each radiator, litres		
32.5	Total volume of oil in radiators,		

	litres		
32.7	Transformer total oil volume, litres		
33.0	Shipping Data		
33.1	Weight of heaviest package, kG		
33.2	Dimensions of the largest package (L x B x H) mm		
34.3	Tests		
34.1	All in process tests confirmed as per Cl. (Yes/ No)		
34.2	All Type Tests confirmed as per Cl. (Yes / No)		
34.3	All Routine Tests confirmed as per Cl. (Yes/ No)		
34.4	All Special Tests confirmed as per Cl. (Yes/ No)		

Schedule B Guaranteed Technical Particulars of Transformer Oil

Bidder to submit hard copy duly filled & signed along with techno commercial offer.

Bidder to submit separate GTP for each type of insulating oil –

Sr No	Item description	Specification requirement	Data by Vendor
1.0	Manufacturer Name		
1.1		Address	
1.2		Contact person	
1.3		Contact telephone no	
2.0	**Function**		
2.1	Viscosity		
2.1.1	Viscosity at 40^0C	15 mm^2/s, Max	
2.1.2	Viscosity at 0^0C	1800 mm^2/s, Max	
2.2	Pour Point	- 10^0C, Max	
2.3	Water content	30 mg/Kg, Max	
2.4	Breakdown voltage		
2.4.1	New unfiltered oil	30 kV, Min	
2.4.2	After filtration	70 kV, Min	
2.5	Density at 20^0C	0.895 g/ml, Max	
2.6	Dielectric dissipation factor at 90^0C	0.005, Max	
2.7	Particle Content	Manufacturer to specify the data	
3.0	**Refining/Stability**		
3.1	Appearance of oil	Clear, free from sediment and suspended matter	
3.2	Acidity	0.01 mg KOH/g, Max	
3.3	Interfacial tension at 27^0C	0.04 N/m, Min	
3.4	Total sulphur content	Manufacturer to specify the data	
3.5	Corrosive sulfur	Not-corrosive	
3.6	Potentially Corrosive sulfur	Not-corrosive	
3.7	DBDS	Not detectable (<5 mg/kg)	
3.8	Inhibitor	Not detectable (<0.01%)	
3.9	Metal Passivator	Not detectable (<5 mg/kg)	
3.10	Other additives	Manufacturer to specify the data	
3.11	2-furfural and related Compounds content	Not detectable (<0.05 mg/kg) for each individual compound	
4.0	**Performance**		
4.1	Oxidation stability, test duration 164 h		
4.1.1	Total acidity	1.2 mg KOH/g, Max	
4.1.2	Sludge	0.8%, Max	
4.1.3	DDF at 90^0C	0.5, Max	
4.2	Gassing Tendency	Manufacturer to specify the data	
4.3	ECT	Manufacturer to specify the data	
5.0	**Health,safety and Environment**		

Sr No	Item description	Specification requirement	Data by Vendor
5.1	Flash point	135^0C, Min	
5.2	PCA content Max	3%, Max	
5.3	PCB content	Not detectable (<2 mg/Kg)	

Schedule C Recommended Spares (Data by Seller)

List of recommended spares as following –

Sr No	Description of spare part	Unit	Quantity
1		No	
2		No	
3		No	
4		No	
5		No	
6		No	

BSES Rajdhani Power Limited
BSES Bhawan, Nehru Place, New Delhi- 19

BRPL

TECHNICALSPECIFICATION

FOR

SCADA SUBSTATION AUTOMATION SYSTEM

Prepared by	Sanjay Bhatnagar		Rev: 0
Reviewed & Approved by	BHUWANESH DWIVEDI		Date: 07-10-22

Technical Specifications for SCADA Interface work & Automation

1.0 INTENT OF SPECIFICATION:

This specification is intended to cover the supply and execute work related to interface of all electrical equipment with RTU panel complete with all materials and accessories for efficient and trouble free operation. In the event of any discrepancy with the listed documents, the stipulation of this specification shall govern.

2.0 SCOPE OF WORK

For substation, it is proposed to lay and terminate panel wirings / control cables if any between the equipment such as CT, PT, Circuit Breaker, Isolators, 11 KV Switchgear, 66,33,11 KV Control & Relay Panels, Power Transformer & its sensors – OTI, WTI, TPI, AVR, etc, REGDA relay, Capacitor Bank, NIFPS, Smoke Detectors and Battery Charger.

The scope of work under this category would include:

- Supply of SCADA materials – BCPU & RTU with Processors (Basic License - IEC 870-5,101,103,104, Modbus, IEC 61850-8-1, IEC -104 Master, IEC 104 Slave + PLC License) along with IO Modules. Other accessories such as Communication Rack, Power Supply Modules, MFM, GPS, Converters for DC to DC & Other FO Converters, Cables - FO, CAT-6, RS485, Control Cables and Connectors if any shall be in SCADA vendor's scope of supply.
- Installation, Testing & Commissioning of SCADA equipment with Control Center via IEC-104 Protocol.
- Integration, Database development & Testing of SCADA Front end equipment (Sub Station level equipment integration over Modbus TCP IP,Serial/IEC-103/IEC-61850 Protocols.
- Extraction of ICD / SCD files from IED and further integration with RTU over IEC-61850 / IEC103 Protocols at site with Supplied Hardware.
- Supply of Necessary RTU Till Tool with Licenses & Softwares if any (Ex: IET600) required forICD/SCD file configuration in RTU.
- Laying and Termination of armored Communication cables (Ethernet, Fiber Optic Patch Cards/Cable, RS 485 cables) between grid devices (Numerical Relays / BCPU, Transformer Monitoring Modules, Smoke detector, NIFPS panel, MFM, Battery Charger) to RTU/DCU/Gateway with proper tagging, and dressing up to RTU panel. Supply of SuitableGlands, White Sleeve PVC ferrule, tagging, lugs shall be scope of vendor's supply.
- Laying and termination of control cables between grid equipment (control and relay panel, NIFPS, Battery Units) to RTU for hardwired signals.
- Installation of cable trays with accessories or trench as required for the cabling work.
- Integration of PQA over Modbus TCP IP/IEC-61850 with dedicated network.
- Integration Li-Ion Battery Charger over Modbus TCP IP/Serial with RTU.

- Preparation of cable schedule, wiring diagrams, Training documents with Step by Step . Procedures and Interconnection as built drawings.
- Separate earthing bus bars to be provided for RTU panel and it will be directly connected to grid earthing . Earth BAR material should be Copper.
- Separate earth riser with connections for Electronic cards, gateway, Switches, DCU etc.
- All internal wiring between BCU and C&R Panel terminals, All Numerical relays, MFM (Multifunctional meters) and other grid equipment integration should be under SCADA vendor's scope.
- Hardware & software integration of RTU, Bay Control Units along with other equipment viz. Battery Chargers, Multi-Function Meters, Fire Fighting System Signals, Transformer relays (for OTI, WTI, TPI, AVR, etc.), Smoke Detector Panels, Numerical Relays,
- 11&33&66KV Control and Relay panel signals etc. shall be in Vendor's scope.
- FAT and Training arrangements at factory/Work shop for BSES SCADA team (6 Persons for5 days) – Travel, Boarding, accommodation and local conveyance etc. Shall be under SCADA Vendor's Scope.

2.1 Cables

The following types of cables / wirings will be required for extending signals and commands. Tagging is mandatory for all types of cables. Heat shrinking ferrule sleeves with printed ferrules to be used for identifying cables & Signals.

- 2.5 mm2, multi-stranded flexible copper wire, FRLS 1.1KV HRPVC for AC & DC Supply & 1.5 mm2 multi strand cables for other internal wiring for RTU.
- Red (P)and Black(N) color cable core to be used for AC and DC wiring.
- Fiber Optic Cables (GLASS&PLASTIC Types) with suitable connectors & Ethernet cables (CAT6) with conduit pipe for internal connections and GI Armored Cables for external connections.
- 2 C X 2.5 MM2 multi strained copper cable, ARM FRLS 1.1KV HRPVC for external AC / DCPower Supply.
- 10C/16/6 C x 1.5 mm2, multi strained copper cable, ARM FRLS 1.1KV HRPVC, application for digital signal feedback / command (DI/DO).
- 6 C x 1.5 mm2, multi strained screened copper cable, ARM FRLS 1.1KV HRPVC, Application:digital signal feedback (AI).
- 3P X 1.5 mm2 for DO (Digital output)
- Suitable Insulated lugs – Ring, U Type to be used for SCADA terminations.
- 2P X 0.5 mm2 Screened GI Armored RS485, Twisted pair (2 Pair), 22gauge Belden, 9842 8761 or equivalent for external (RTU to BCUs /MFM/BATT.CHG/Transformer Monitoring Devices) RS 485 connections.

The supplied cable shall be as per latest IS, also refer control cable specification & Armored cables should be supplied for trench applications.

❖ **Cable Gland**

Double Compression cable glands (Materials - Brass and Stainless Steel & Suitable for Industrial Grade) of different sizes for cable entry into the RTU, DCU, CRP & Other Panels

❖ **Cable Trays and NS cable Support**

➢ Perforated / ladder type (galvanized Iron) with cover for laying all type of the cables.

2.2 Multifunction Meters (Accuracy – 0.2)

To extend the current / voltage / active and reactive power, power factor, etc. to RTU, MFMs, to be installed in C & R Panel individually for each feeder/ breakers and should be integrated with RTU. The outputs of these meters (in groups of 5) connections should be made using twisted pair screened cable (Typically 22gauge Belden 8761 or equivalent) & two wires (A and B) connections are daisy chained together and integrated with RTUs. All hardware's or protocol converters for having Modbus Protocol output, CT & PT wirings to MFMs and its Configuration should be in Vendor's scope.

For the protection of MFMs and RTU cards against Surges and electrical leakages, it is necessary to install Surge Protection Devices in b/w RTU & MFM serial loops. The typical diagram for this connection is mentioned in the System Architecture diagram. MFM should be powered through Grid Battery Voltage (220 Volt-or 50 Volts DC as per site requirement).

The following parameters of MFM must be available for communication with RTU.

- Phase Voltages (L1-N, L2-N, L3-N)
- Line Voltages (L1-L2, L2-L3, L1-L3)
- Line Currents (IL1 , IL2, IL3)
- Active Power & Reactive Power
- Maximum Demand (KW) & Frequency
- Power factor
- Active Energy and reactive Energy
- THD mean current & THD mean Voltage
- Neutral Current.
- Phase Angles

Approved Makes – RISH 3440 and Conzerv EM 6400NG+

2.3 Numerical Relays or Bay Control Protection Units for all feeders (11, 33, 66 KV)

Numerical IEDs / Relays shall be integrated with Remote Terminal Units. All hardware's and protocol converters if required for compatibility with SCADA shall be in Vendor's scope.
The respective BCPU(IED) must have **dual redundancy communication ports** (Ethernet/Copper/FO Ports) with **RSTP & PRP** protocols for SCADA connections & It will be connected to RTU via IEC 61850 protocol. (Dual Ports required to form a **RSTP & PRP** Networks b/w relay to relay connections).
Data Base File must be downloadable and Up-loadable from BCU.
The following signals are to be taken from Numerical Relays to the BCUs through internal hard wiring. This list is indicative only and number of signals should not be limited to this. Additional signals should be taken during review of actual drawings. – **Refer Para 2.8 for detail signals list with data format (DPI, DCO, SPI, SCO, Measured Values) types.**

- Online Currents / Voltage & 86 Relay trip signal
- All breaker, Isolators, Control & Relay Panel indications and commands
- Fault current all phase and phase indication of faulty phase viz. R, Y, B, Earth, Unbalance (O/C & E/FRelay).
- Fault Differential and Bias current in Line and Transformer Differential Relay
- Fault voltage and phase indication of faulty phase viz. R, Y, B (Voltage Protection Relay).
- Post fault currents (R, Y, B phase separately) measured value & Relay Internal Fault
- Fault distance (in case of distance relays - R, Y, B Phase separately)
- Unbalance Current (in case of neutral displacement relay of capacitor feeders).

2.4 Transformer Signal – Transformer Monitoring Unit (TMU):

OTI, WTI, TPI, AVR, OLTC counts and Transformer auxiliary protection signals should be integrated with RTU via IEC 61850 / IEC103 / Modbus Protocol. TMU must have dual communication ports & have the option of RSTP and PRP Protocols for SCADA Connections. All field installations of these sensors and its wiring/cabling and configuration along with hardware's or protocol converters, if any, should be in Contractor's scope. - **Refer Para 2.8 for detail signal's list with data types.**

2.5 Battery Charger and Lithium Battery Integrations:

Battery Chargers and Lithium Ion Battery bank should support MODBUS RTU Protocol and integrated with RTU through serial communication (RS 485) cables.
Laying communication cables through conduit pipe and battery charger signals (Soft & Hard Signals) integration with an RTU shall be in Vendor's Scope. - **Refer Para 2.8 for detail Battery Charger signal's list with data types.**

2.6 Data Concentrator Unit / Gateway & Remote Terminal Units

For extending the signals from the grid to the Master Control Centre & Backup Control Centre, BCPUs and RTUs are to be installed. BCPUs needs to be initially physically integrated with Numerical relays of respective breakers to enable soft signals and commands for breakers to be configured there and respective BCPU integrated with Remote TerminalUnits through IEC – 61850 protocol. However the options for IEC-60870-103 protocol along with the MODBUS protocol option is required for other devices integrations. BCPUs can be of **ABB, Siemens, Schneider Electric, GE**, etc. make is depending on the type / make of switch gears. **Remote Terminal Units need to be installed for interface between the BCPUs and Control Centers (Main and Backup) through IEC – 60870 – 104 Protocol.** The size of RTU will depend on the size of the substation, no. of the feeders / number of signals and command outputs along with sufficient spares (20%) for future requirement.
All associated equipment and Supply of accessories including software & Operating tool / multiple user licenses for RTU & BCPU, MCBs for DC and AC Supply, DC to DC Converter (in case station battery voltage level is 220 volts DC), etc. should be in Vendor's scope.
Hardware & software integration of RTUs, BCPU along with other equipment viz. Battery Chargers, Multi-Function Meters, Fire Fighting Systems, Signals, Transformer relays (for OTI, WTI, TPI, AVR, etc.), Numerical Relays, etc. should be in Vendor's scope.

Hot redundancy is required for Main Processor Modules, rack board, PSU and Gateway for MCC & BCC Communications. Each main processor must have two Ethernet ports dedicated for communication with SCADA servers over IEC 60870-104 protocol. While First Module will be live, redundant should be hot standby and vice versa. Communication switchover between either modules in case of failure. Main Processor module along with Rack for MCC communication should be separate from the IO cards.
All modules (IO/Processors/PSU) must have **conformal Coating** to protect against moisture, dust, chemicals and harsh environments.
Data Base File must be downloadable and Up-loadable from RTU, CPU and Gateway. **Approved RTU makes – ABB-RTU560, Schneider-SAITEL DP, Siemens A8000. Bidders who are OEM of RTU and Numerical Relays are acceptable if approved after evaluation of performance during trial. (Observation Period – 90 Days with Minimum 90 IED Capacity) with successful test results are main criteria for induction of any new models in BRPL.**

Note : System shall be approved if they agree to fulfill the following terms & Conditions. It is applicable for all OEM products.

- AMC period of 3 years shall be given along with this proposal.
- AMC period shall be started after handing over the system to BRPL.
- During AMC period all the issues pertaining to RTU/Gateway/BCU shall be handled by OEM at site irrespective of number of site visits.
- 5 Year replacement warranty is applicable to OEM's Electronic RTU Modules, Gateway Units Network devices etc .If any hardware (or) Software fails during this period shall be rectified by OEM on site within 48 hours.

- Antivirus/Cyber Security solution for Gateway/RTU unit with 5 years validity need to be considered. Patches update if any, required with in this period shall be under OEM's scope.
- 5 years warranty is mandatory for all SCADA/RTU products (Electronic modules/cards, GPS, Ethernet Switches, HMI etc.). If any cards fails/burns due to surges from CT, PT via RS485/serial, Surges through cables etc. then replacement shall be under OEM's scope till warranty period. Suitably designed SPD's shall be incorporated in the circuits as per the site requirements to avoid such failures.

RTU/ Data Concentrator Unit Features & Performance capabilities

2.6.1 RTU, DCU Size and Expandability

20% Spare for RTU, DCU - Provision for 20 % (Basic IO Count +20% Spare) of the total DI / DO signals (hard/soft) as a spare shall be made available for future requirement.

Spare Communication Port – In RTU there shall be the provision of 3 to 4 spare ports to accommodate IEC 103/Mod Bus Protocol Connections and spare port 1 each, for IEC 104 and IEC 61850 communication.

20% Spare for BCPU - Each Control and Relay panel BCU must have 20% (Basic + 20% Spare)of the particular bay DI/DO signals as a spare.

Panel Size & Hardware Capacity - The RTU system shall have the capacity of accommodating additional 50% of the basic I/O counts by addition of hardware such as modules, racks, panels, Terminal Blocks of basic I/O counts.

Software license Capacity - The RTU software license shall have the minimum capacity to configure 5000 data points and to configure minimum 150 IED's.

2.6.2 Remote database, downloading of RTU from master station / SCADA control center.

2.6.3 RTU shall have the capability of automatic start-up and initialization following restoration of power after an outage without the need for manual intervention. All restarts shall be reported to the connected master stations.

2.6.4 Act as a data concentrator on IEC60870-5-101/104/MODBUS/IEC 61850 protocols and Support for IEC 60870-5-103, IEC 60870-5-101, IEC 61850,MODBUS TCP IP and RS485 Modbus RTU protocols & ability to act as a gateway for Numerical relays.

2.6.5 Cyber Security

As the SCADA system will use public domain, such LAN/VSAT/GPRS/CDMA etc. therefore it is mandatory to guard the data/ equipment. from intrusion/damage/breach of security & shall have SSL/VPN based security.

2.6.6 Internal battery backup to hold data in SOE buffer memory & also maintaining the time & date.

2.6.7 RTU must have the capability of time synchronization with a GPS receiver and the GPS atthe control room will be used for this synchronization purpose. In case of failure of the GPS receiver, the RTUs time synchronization should be through the Master's SCADA clock.

2.6.8 **GPS for Time Synchronization** - The RTU must have inbuilt or external GPS with antenna & internal real time clock to synchronize the IEDs connected to it over their respective protocol. **GPS must have dual redundant LAN port for time synchronization.**

Approved Makes – MASSIBUS & SANDS

2.6.9 **Main Processor(CPU in RTU & Gateway) HOT Redundancy for MCC & BCC communication**

Main processor (DCU) /RTU should have adequate capacity for data handling / processing and main processor/CPU must have required number of communication ports for simultaneous communication with Master Stations (MCC & BCC), /MFTs and RTU configuration & maintenance tool. RTU main processor/Gateway must have HOT redundancy features for control center communications.

RTU Processor must have the capacity of integration of minimum 120 IED's over IEC -61850 Protocol.

2.6.10 **Hot Standby/Dual Power Supply Unit & Redundancy in power source for RTU and BCU/BCPU** - Possibility to increase the RTU,BCU main rack availability by having a second power supply card in case the first one fails , if any one Power supply card fails the other one should keep the system continuous live.

2.6.11 **CPU/RTU Soft Configuration Future (Communicate to multiple master stations simultaneously on IEC60870-5-104.)**

RTU/DAU must have multiple location (minimum 5 Locations) data transmission facility viz Master Control Centre, Backup Control Centre etc.

2.6.12 **Protection Devices for RTU, BCPU** – All modules (all **Digital, Analog Input modules)** and ports **(Serial and Ethernet ports)** must have in-built or external surge protection devicesand optical isolation

2.6.13 **RTU Self Diagnostic /Data logger function with licence--**

RTU shall be provided with self diagnostic feature/function that continuously monitors the operation of the RTU and report RTU hardware errors to the connected master stations. The function shall check for memory, processor, and input/output ports errors and failures of other functional areas defined in the specification of the RTU. If any system tries to connect to RTU for download/ Unload files, it should be stored as a log in RTU.

2.6.14 **RTU Panels**

At least 50% of the space inside each enclosure shall be unused (spare) space that shall be reserved for future use. The OEM shall provide required panels conforming to IEC 529

for housing the RTU modules/racks, relays, Ethernet switches etc. and other requiredhardware. The panels shall meet the following requirements:

- Shall be free standing, floor mounted and height shall not exceed 2200 mm.
- RTU Panel should have air cooling with FAN with Filters/ louvers mounted on rear side of RTU panel with temperature/humidity control facility.
- Separate room / Cabinet with AC Provision to be considered for RTU and IT Equipment.
- All doors and removable panels shall be fitted with long life rubber gaskets for sealing.
- All non-load bearing panels/doors ,top and bottom portion, rear cover shall be fabricated from minimum 2.0 mm thickness steel sheet and all load bearing panels, frames, top & bottom panels shall be fabricated from minimum 3.0 mm thickness steel sheet.
- Shall have maintenance access to the hardware and wiring through lockable full height doors.
- Shall have the provisions for bottom cable entry.
- All panels shall be supplied with 230V AC, 50 Hz, single-phase, 5 A switch & duplex socket arrangement for maintenance.
- All panels shall be provided with white LED lights of 9W rating at front and rear for illumination. Limit switches should be provided on the doors to control the switching.
- All panels should be provided with heater & thermostat for controlling moisture and should be installed on safe location inside the panel.
- All panels shall meet IP54 class ofIngress protection.
- There shall be no sharp corners or edges. All edges shall be rounded to prevent injury.
- Document Holder shall be provided inside the cabinet to keep test report, drawing, maintenance register etc.
- All materials used in the enclosures including cable insulation or sheathing, wire troughs, terminal blocks, and enclosure trims shall be made of flame retardant material and shall not produce toxic gases under fire conditions.

2.6.15 RTU Grounding

The safety ground shall be isolated from the signal ground and shall be connected to the ground network. Safety ground shall be a copper bus bar. The contractor shall connect the panel's safety ground to the grid grounding network. Separate grounding (2Pits) is created for communication equipment and Signal ground shall be connected to the communication equipment signal ground. The grid station should be at equipotential.

2.7 Ethernet /Fiber Switch

The Ethernet/Fiber optic switches should be a managed switch and are intended to be installed in the control room and shall be compliant to IEC-61850-3 electrical substation networks and IEEE 1613 standards. Provisions for additional feeders on the Ring Configuration should be provided on the same switch.

- Laying of Ethernet/Fiber cables for relay/BCU port to the RTU via switch through conduit pipe / metal galvanized tray and integration with an RTU shall be in Vendor's Scope.

Ethernet/FO Switch Standard Features

- Switch design should withstand for power substation automation applications that operate in extremely harsh environment (High and niedium voltage Substation environment) and it also withstands vibration, electrical surges, fast transients, electrostatic discharge, and extreme temperatures and humidity. Industrial managed Fast Ethernet Switch shall be supplied according to IEEE 802.3.
- Switch features and configuration should be easy to user interface and it must directly integrate with any other IEC-61850 devices. Shall be managed type, Layer-2 Switches and have KEMA certifications for IEC 61850.
- The FO switch shall support Multimode fiber and single mode fiber in 100Mbps ports on an SFP (simple form factor pluggable), for ease of functionality and maintenance.100Mbps ports for substation level communications & 2 or 4 Gigabit Ports for uplink communications as per site requirement.
- Ethernet Switch PCB / PSU must have conformal Coating to protect against moisture, dust,chemicals and extreme temperatures etc.
- Ambient conditions: Operating Temperature -40+70 °C, Storage temperature -40 +85 °C, Relative Humidity 5-95%
- Redundancy Ring: Dual Ring to be consider between Ethernet switches for maintaining redundancy network.
- Hot Standby/Dual PSU & Redundancy in power supply - Possibility to increase the switch availability by having a second power source in case the first one fails. Each PSU should be connected with a different power source, if anypower source or Power supply card fails then other one should keep the switch continuous operation with auto changeover.
- 20% Spare ports – 20% ports should be available as spare for future enhancements.
- Link Failure /Watchdog contact alarm –Programmable Link failure/watch dog contact to be provided as solid state relay hardwired contact.
- Logs and alarms with Time Stamp - Statistics about link status alarms are to be stored with the accurate timestamps duly tracing all events.
- Security features - The switch shall support different user access levels with different passwords, including the facility to work with different VLANs, following the 802.1Q standard, port security based on MAC addresses, possibility to disable unused ports, authentication protocols shall be provided. The switch shall have advanced cyber security features to be implemented to avoid unauthorized access to the system such as RADIUS/TACACS+ & VPN gateway support with IP Sec & SSH.
- High Speed Implementation of RSTP protocol - The switch shall support STP and RSTP protocols and shall facilitate for recovery and the fault recovery times shall be within 5 -10msec per switch, always fulfilling the RST protocol.
- Time Synchronization to RTU/Server and Connected IED/BCU – The switch shall have an internal clock and shall be synchronized from a network SNTP/NTP server, so all time stamped events shall be with a reliable time reference. Also Switch must have the feature of acting as SNTP Server.

- Tools with License - Diagnostics tool, other necessary tools with a multi user license to be provided along with the switch.
- Mounting Options - Switch should be DIN Rail/Flush mountable as per the site requirements with tool kit for mounting to be included.
- Local USB /console port for emergency boot/configuration is Mandatory.
- Network based distributed security by having a firewall on each port of the switch for all the standard Industrial protocol like IEC-61850 should be available.
- The switch shall have the facility of Port mirroring and the user shall configure one port to replicate traffic flows of different ports, so the system administrator can monitor the incoming, outgoing or all kinds of traffic that is going through the ports under study.
- ITU-T G.8032 support for Ethernet Ring redundancy, ensuring fast failure detection is preferred.
- They switches shall sustain the stringent levels in temperature range and electromagnetic immunity defined in the 61850-3, but also the advanced functional requirements defined for operation with other IEC-61850 devices. The Switch should becertified on IEC-61850, functional & Environmental specifications by KEMA.
- ETH Switch Panel :
    - ETH Switches & LIU should be fixed in dedicated wall / Floor mountable cabinet in11kV and 33/66KV CRP Room.
    - Panel must have Sliding tray's for installation of switches.
    - Panel have suitable AC and DC MCB of appropriate rating and relevant accessories for supply.
    - All doors and removable panels shall be fitted with long life rubber gasket for sealing.
    - All non-load bearing panels/doors ,top and bottom portion, rear cover shall be fabricated from minimum 2.0 mm thickness steel sheet and all load bearing panels, frames, top & bottom panels shall be fabricated from minimum 2.0 mm thickness steel sheet.
    - Shall have maintenance access to the hardware and wiring through lockable doors.
    - Shall have the provisions for bottom cable entry.
    - All panels shall be supplied with 230V AC, 50 Hz, 5A switch & socket arrangement with a lamp inside the panel.
    - All panels shall be indoor and IP54 class of Ingress protection.
    - Front Toughened glass door with turning angle around 180 deg.
    - There shall be no sharp corners or edges. All edges shall be rounded to prevent injury.
    - All materials used in the enclosures including cable insulation or sheathing, wire troughs, terminal blocks, and enclosure trims shall be made of flame retardant material and shall not produce toxic gases under fire conditions.
- Approved Makes of Switches – **RUGGEDCOM, CISCO & HIRSCHMANN.**

Technical Specifications for SCADA Interface work & Automation

2.8 SIGNAL LIST (11/33/66KV)

List of Abbreviations
AI - Analog Input/Analog Values
MV - Measured Value
MFM - Multi Function Meter
DCO - Double Command Output
DPI - Double Point Indication
SCO - Single Command Output
SPI - Single Point Indication
RTU - Remote Terminal Units
BCU - Bay Control Units

Signals - 11KV Out Going Feeders	Digital Input/AI soft through N.Relay/BCPU	Digital Out Put soft through N.Relay/BCPU	Digital Input Hard Wire to RTU	Additional Signals Hard wire to RTU for backup	Signal Type	N.Relay Protocol
Breaker ON	√			√		IEC-61850 with Dual Communication Ports
Breaker OFF				√	DPI	
Trip Ckt Healthy -1	√				SPI	
Trip Ckt Healthy - 2	√				SPI	
Spring Charge	√				SPI	
Breaker in service	√				SPI	
Breaker in Test	√				SPI	
Auto Trip(86) Operated	√				SPI	
Panel DC Fail				√	SPI	
L/R Switch in Local			√		SPI	
L/R Switch in SCADA	√				SPI	
Relay Int Fault.				√	SPI	
Over Current Operated	√		√		SPI	
Earth Fault Operated	√				SPI	
BKR Close COMMAND					SPI	
BKR Open COMMAND		√		√	DCO	
AutoTrip(86) relay reset from Remote		√			SCO	
3Phase R,Y,B - Current & Voltage,Active Power,Reactive Power,Power Factor,Max.Demand,Neu.Current	√				AI/MV	
Fault current and phase indication of faulty phase viz. R,Y,B, Earth, Unbalance(O/C & E/F Relay).Disturbance Records,Fault Graphs for Remote diagnosis purpose	√				AI	
Total Signals - BCPU & RTU	10 DI +IGEN DI + Analog , Measurand Values	3 DO	2DI	5DI + 2 DO		

Chapter 6b. Technical Specification for SCADA interface work & Automation

Essential Inbuilt Spare in BCPU	3 DI	2 DO				

Signals 33 KV Incomers	Digital Input/AI soft through N-Relay/BCPU	Digital Out Put soft through N-Relay/BCPU	Digital Input/Output Hard Wire to RTU	Additional signals Hard wire to RTU for backup	Signal Type	N-Relay Protocol
Breaker ON	√			√	DPI	IEC-61850 with dual Communication Ports
Breaker OFF				√		
Trip Ckt Healthy - 1	√				SPI	
Trip Ckt Healthy - 2	√				SPI	
Spring Charge	√				SPI	
Breaker in service	√				SPI	
Breaker in Test					SPI	
Auto Trip(86) Operated	√			√	SPI	
VT fuse Blown - Metering.	√				SPI	
VT fuse Blown – Protection	√				SPI	
Panel DC Fail			√		SPI	
L/R Switch in Local	√				SPI	
L/R Switch in SCADA				√	SPI	
Relay Int Fault.			√		SPI	
Over Current Operated(All stages)	√				SPI	
Earth Fault Operated (All stages)	√				SPI	
Under Voltage Prot.Operated	√				SPI	
Over Voltage Prot.Operated	√				SPI	
REF Operated	√				SPI	
BKR Close COMMAND		√		√	DCO	
BKR Open COMMAND				√		
AutoTrip(86) relay reset from Remote		√			SCO	
3Phase R,Y,B - Current & Voltage,Active Power,Reactive Power,Power Factor,Max.Demand,Neu.Current	√				AI/MV	
Fault current and phase indication of faulty phase viz. R,Y,B, Earth, Unbalance(O/C & E/F Relay).Fault voltage and phase indication of faulty phaseviz. R,Y,B (Voltage Protection Relay). Disturbance Records, Fault Graphs for Remote diagnosis purpose	√				AI	
Total Signals - BCPU & RTU	12 DI + IGEN Digital+Analog , Measurand Values	3 DO	2DI	5DI + 2 DO		
Essential inbuilt Spare in BCPU	3 DI	2 DO				

Technical Specifications for SCADA Interface work & Automation

Signals - 11KV Bus Coupler	Digital Input/AI softthrough N:Relay/BCU	Digital OutPut soft through N:Relay/BCU	Digital Input/Output Hard Wire to RTU	Additional signals Hard wire toRTU for backup	Signa l Type	N:Relay Protocol
Breaker ON	√			√	DP I	IEC-61850 with Dual Communication Ports
Breaker OFF				√		
Trip Ckt Healthy -1	√				SPI	
Trip Ckt Healthy -2	√				SPI	
Spring Charge	√				SPI	
Breaker in service	√				SPI	
Breaker in Test					SPI	
Auto Trip(86) Operated	√			√	SPI	
Panel DC Fail			√		SPI	
L/R Switch in Local	√				SPI	
L/R Switch in SCADA				√	SPI	
Relay Int Fault.			√		SPI	
PT MCB - Metering operated	√				SPI	
PT MCB - Protection operated	√				SPI	
Over Current Operated	√				SPI	
Earth Fault Operated	√				SPI	
BKR Close COMMAND		√		√	DCO	
BKR Open COMMAND						
Fault current and phase indication of faulty phase viz. R,Y,B, Earth, Unbalance(O/C & E/F Relay).Disturbance Records,Fault Graphs for Remote diagnosis purpose	√				AI	
Total Signals - BCPU & RTU	10 DI +IGEN DI + Analog, Measurand Values	3 DO	2DI	5DI + 2 DO		
Essential inbuilt Spare in BCPU,BCU	3 DI	2 DO				

Signals - 11KV Capacitors	Digital Input/AI softthrough N:Relay/BCPU	Digital OutPut soft through N:Relay/BCPU	Digital Input/Output Hard Wire to RTU	Additional signals Hard wire toRTU for backup	Signa l Type	N:Relay Protocol
Breaker ON	√			√	DPI	IEC-61850 with Dual Communication Ports
Breaker OFF				√		
Bank ISO ON	√				DPI	
Bank ISO OFF						
Trip Ckt Healthy -1	√				SPI	
Trip Ckt Healthy -2	√				SPI	
Spring Charge	√				SPI	
Breaker in service	√				SPI	
Breaker in Test					SPI	
Master Trip(86) Operated	√			√	SPI	

Bus PT fuse Blown - Metering.	√				SPI
Bus PT fuse Blown - Protection	√				SPI
Panel DC Fail			√		SPI
L/R Switch in Local	√				SPI
L/R Switch in SCADA	√			√	SPI
Over Current Operated	√				SPI
Earth Fault Operated	√				SPI
Under Voltage Prot.Operated	√				SPI
Over Voltage Prot.Operated	√				SPI
Neg.Phase.sequence Operated	√				SPI
Timer Relay operated/Normal	√				DPI
Relay Int Fault.			√		SPI
BKR Close COMMAND		√		√	DCO
BKR Open COMMAND					
BANK ISO OPN		√			DCO
BANK ISO CLS					
Master trip (86)reset from remote		√			SCO
3Phase R,Y,B - Current&Voltage,Reactive Power,Neu.Current	√				AI/MV
Fault current and phase indication of faulty phase viz. R,Y,B, Earth, Unbalance(O/C & E/F Relay).Fault voltage and phase indication of faulty phaseviz. R,Y,B (Voltage Protection Relay). Disturbance Records, Fault Graphs for Remote diagnosis purpose	√				AI
Total Signals - BCPU & RTU	12 DI + IGEN DI+Analog, Measurand Values	5 DO	6DI	5DI + 2 DO	
Essential inbuilt Spare in BCPU	3 DI	2 DO			

Signals -33 & 66KV Incomers/Out Going	Digital Input/AI soft through N:Relay/BCPU	Digital Out Put soft through N:Relay/BCPU	Digital Input/Output Hard Wire to RTU	Additional Spare signals (Hard wire to RTU for backup)	Signal Type	Protocol
Breaker ON	√			√	DPI	IEC-61850 with Dual Communication Ports.
Breaker OFF						
Front Bus (89A) ISO ON(In-Case of O/D)	√			√	DPI	
Front Bus (89A) ISO OFF (In-Case of O/D)						
Rear Bus (89B) ISO ON (In-Case of O/D)	√			√	DPI	
Rear Bus (89B) ISO OFF (In-Case of O/D)						
LINE ISO (89L) ON (In-Case of O/D)	√			√	DPI	
LINE ISO (89L) OFF (In-Case of O/D)						
Earth Switch (89LE) -1 ON (In-Case of O/D)	√				DPI	
Earth Switch (89LE) -1 OFF (In-Case of O/D)						
Earth Switch (89LE) - 2 ON (In-Case of O/D)	√				DPI	
Earth Switch (89LE) - 2 OFF (In-Case of O/D)						
Breaker in service (In-case of I/D BKR)	√				SPI	
Breaker in Test (In-case of I/D BKR)	√				SPI	

Trip coil Ckt Healthy - 1	√				SPI
Trip coil Ckt Healthy - 2	√				SPI
Spring Charge	√				SPI
Master trip(86) Operated	√			√	SPI
SF6 Pressure Low	√				SPI
SF6 Lock Out	√				SPI
VT fuse Fail	√				SPI
Panel DC Fail			√		SPI
L/R Switch in Local	√				DPI
L/R Switch in Remote	√			√	
LBB Operated	√				SPI
Relay Int Fault.			√		SPI
Over Current Operated (All stages)	√				SPI
Earth Fault Operated (All stages)	√				SPI
DIFF.Prot Operated	√				SPI
DIST.Plot Operated	√				SPI
BKR CLS COMMAND		√		√	DCO
BKR OPN COMMAND				√	
Front Bus (89A) ISO OPNCOMMAND (In-Case of O/D)		√			DCO
Front Bus (89A) ISO CLS COMMAND (In-Case of O/D)					
Rear Bus (89B) ISO CLS COMMAND (In-Case of O/D)		√			DCO
Rear Bus (89B) ISO OPN COMMAND (In-Case of O/D)					
LINE ISO (89L) OPN COMMAND (In-Case of O/D)		√			DCO
LINE ISO (89L) CLS COMMAND (In-Case of O/D)					
Master Trip(86) relay reset from Remote		√			SCO
3Phase R,Y,B - Current&Voltage,Active&Reactive Power,PowerFactor,Max.Demand,Neu.Curren t etc	√				AI/M V
Fault current and phase indication of faulty phaseviz. R,Y,B, Earth, Unbalance(O/C & E/F Relay).Fault voltage and phase indication of faulty phase viz. R,Y,B (Voltage Protection Relay). Fault Differential and Bias current in Line and Transformer Differential Relay ,Fault distance (in Distance Relay) ,Disturbance Records, Fault Graphs for Remote diagnosis purpose	√				AI
Total Signals - BCPU & RTU	29 DI + IGEN DI+Analo g, Measuran dValues	9 DO	3DI	8DI + 8 DO	
Essential inbuilt Spare in BCPU	6 DI	3 DO			

BSES Rajdhani Power Limited
BSES Bhawan, Nehru Place, New Delhi- 19

Signals -33 & 66KV Transformer	Digital Input/AI soft through N:Relay/BCPU	Digital Out Put soft through N:Relay/BCPU	Digital Input/Output Hard Wire to RTU	Additional signals Hard wire to RTU for backup	Signal Type	Protocol
Breaker ON	√			√	DPI	IEC-61850 with dual Communication Ports
Breaker OFF						
Front Bus (89A) ISO ON(In-Case of O/D)	√			√	DPI	
Front Bus (89A) ISO OFF (In-Case of O/D)						
Rear Bus (89B) ISO ON (In-Case of O/D)	√			√	DPI	
Rear Bus (89B) ISO OFF (In-Case of O/D)						
TRF ISO (89T) ON (In-Case of O/D)	√			√	DPI	
TRF ISO (89T) OFF (In-Case of O/D)						
Earth Switch (89LE) -1 ON (In-Case of O/D)	√				DPI	
Earth Switch (89LE) -1 OFF (In-Case of O/D)						
Earth Switch (89LE) - 2 ON (In-Case of O/D)	√				DPI	
Earth Switch (89LE) - 2 OFF (In-Case of O/D)						
Breaker in service (In-case of I/D BKR)	√				DPI	
Breaker in Test (In-case of I/D BKR)						
Trip coil Ckt Healthy - 1 & 2	√				SPI	
Spring Charge	√				SPI	
Auto Trip(86) Operated	√			√	SPI	
Differential Operated	√				SPI	
LBB Operated	√				SPI	
REF/SEF Prot Operated	√				SPI	
SF6 Pressure Low & SF6 Lock Out	√				SPI	
Panel DC Fail			√		SPI	
L/R Switch in Local	√				DPI	
L/R Switch in Remote	√			√		
Relay Int Fault.			√		SPI	
Over Current Operated	√				SPI	
Earth Fault Operated	√				SPI	
BKR CLS COMMAND		√		√	DCO	
BKR OPN COMMAND				√		
Front Bus (89A) ISO OPNCOMMAND (In-Case of O/D)		√			DCO	
Front Bus (89A) ISO CLS COMMAND (In-Case of O/D)						
Rear Bus (89B) ISO CLS COMMAND (In-Case of O/D)		√			DCO	
Rear Bus (89B) ISO OPN COMMAND (In-Case of O/D)						
Trf ISO (89T) OPN COMMAND (In-Case of O/D)		√			DCO	
Trf ISO (89T) CLS COMMAND (In-Case of O/D)						
Mastertrip (86) relay reset from Remote		√			SCO	
3Phase R,Y,B -Current&Voltage,Active&Reactive Power,PowerFactor,Max.Demand,Neu.Current	√				AI/MV	

Fault current and phase indication of faulty phaseviz. R,Y,B, Earth, Unbalance(O/C & E/F Relay),Fault voltage and phase indication of faultyphase viz. R,Y,B (Voltage Protection Relay). Fault Differential and Bias current in Line and Transformer Differential Relay ,Fault distance (in Distance Relay) ,Disturbance Records, Fault Graphs for Remote diagnosis purpose	√				AI	
Total Signals - BCPU & RTU	28 DI + IGEN DI+Analog, Measurand Values	9 DO	4DI	8DI + 8 DO		
Essential inbuilt Spare in BCPU	6 DI	3 DO				

Transformer - RTCC/A-Eberle Signals	Digital Input/AI soft through TMM	Digital Out Put soft through TMM	Digital Input/Output Hard Wire to RTU	Analog input soft through TMM	Signal Type	Protocol
A-Eberle Unit Faulty/DC Fail			√		SPI	IEC-61850 with Dual Communication Ports
Oil Temp Alarm	√				SPI	
Oil Temp trip	√				SPI	
Winding Temp Alarm	√				SPI	
Winding Temp Trip	√				SPI	
Buchholz Alarm	√				SPI	
Buchholz Trip	√				SPI	
PRV TRIP	√				SPI	
OLTC OSR	√				SPI	
MOG/LOW Oil level Alarm	√				SPI	
SPR Trip	√				SPI	
OSR Main Tank	√				SPI	
L/R Switch In Local	√				DP I	
L/R Switch in Remote	√					
Auto Mode	√				DP I	
Manual Mode	√					
Fan Fail	√				SPI	
Tap Changer Fail	√				SPI	
OLTC Out of Step/Stuck Up/Motor trip	√				SPI	
Tap Rise/Tap Low Command		√			DCO/RCO	
Tap Rise/Tap Low Command		√				
Oil Temp				√	AI	
Winding Temp				√	AI	
Tap Position				√	AI	
Total Signals - BCPU & RTU	19 DI	2 Command	1 DI	3 Analog, Measurand Values		
Essential inbuilt Spare in BCPU	2 DI	1 DO				

Technical Specification for SCADA interface work & Automation

Signals -33 & 66KV Bus Coupler	Digital-Input/AI soft through N.Relay/BCPU	Digital Out Put soft through N.Relay/BCPU	Digital-Input/Output Hard-Wire to RTU	Additional signals Hard wire to RTU for backup	Signal-Type	Protocol
Breaker ON						
Breaker OFF	√			√	DPI	
Front Bus (89A) ISO ON(In-Case of O/D)						
Front Bus (89A) ISO OFF (In-Case of O/D)	√			√	DPI	
Rear Bus (89B) ISO ON (In-Case of O/D)						
Rear Bus (89B) ISO OFF (In-Case of O/D)	√			√	DPI	
Earth Switch (89AE-1) - ON (In-Case of O/D)	√					
Earth Switch (89AE-1) - OFF (In-Case of O/D)					DPI	
Earth Switch (89AE-2) - ON (In-Case of O/D)						
Earth Switch (89AE-2) - OFF (In-Case of O/D)					DPI	
Earth Switch(89BE-3) - ON (In-Case of O/D)	√					
Earth Switch(89BE-3) - OFF (In-Case of O/D)					DPI	
Earth Switch(89BE-4) - ON (In-Case of O/D)						
Earth Switch(89BE-4) - OFF (In-Case of O/D)					DPI	
Breaker In service (In-case of I/D BKR)						
Breaker in Test (In-case of I/D BKR)	√				DPI	
Trip coil Ckt Healthy - 1 & 2	√				SPI	
Spring Charge	√				SPI	
Auto Trip(86) Operated	√			√	SPI	
SF6 Pressure Low	√				SPI	
SF6 Lock Out	√				SPI	
VT fuse-1 Blown	√				SPI	
VT fuse-2 Blown	√				SPI	
Panel DC Fail			√		SPI	
L/R Switch in Local	√					
L/R Switch in Remote	√			√	DPI	
LBB Operated	√				SPI	
Relay Int Fault.			√		SPI	
Over Current Operated (All stages)	√				SPI	
Earth Fault Operated(All stages)	√				SPI	
BKR CLS COMMAND		√		√	DCO	
BKR OPN COMMAND				√		
Front Bus (89A) ISO OPNCOMMAND (In-Case of O/D)		√			DCO	
Front Bus (89A) ISO CLS COMMAND (In-Case of O/D)						
Rear Bus (89B) ISO CLS COMMAND (In-Case of O/D)		√			DCO	
Rear Bus (89B) ISO OPN COMMAND (In-Case of O/D)						
AutoTrip(86) relay reset from Remote		√			SCO	
3Phase R,Y,B - Current ,BUS PT-01 & BUS PT023Phase votages.	√				AI/MV	

IEC-61850 with Dual Communication Ports

Fault current and phase indication of faulty phaseviz. R,Y,B, Earth, Unbalance(O/C & E/F Relay).Fault voltage and phase indication of faultyphase viz. R,Y,B (Voltage Protection Relay). Fault Differential and Bias current in Line and Transformer Differential Relay ,Fault distance (in Distance Relay) ,Disturbance Records, Fault Graphs for Remote diagnosis purpose	√				AI	
Total Signals - BCPU & RTU	31 DI + IGEN DI + Analog ,Measurand Values	9 DO	2DI	6DI + 6 DO		
Essential inbuilt Spare in BCPU	6 DI	3 DO				

Signals - 33 & 66KV CAP Bank	Digital Input/AI soft through N.Relay/BCPU	Digital Out Put soft through N.Relay/BCPU	Digital Input/Output Hard Wire to RTU	Additional signals Hard wire to RTU for backup	Signal Type	Protocol
Breaker ON	√			√	DPI	IEC-61850 With Dual Communication Ports
Breaker OFF						
Front Bus (89A) ISO ON(In-Case of O/D)	√			√	DPI	
Front Bus (89A) ISO OFF (In-Case of O/D)						
Rear Bus (89B) ISO ON (In-Case of O/D)	√			√	DPI	
Rear Bus (89B) ISO OFF (In-Case of O/D)						
CAP Bank ISO ON (In-Case of O/D)	√			√	DPI	
CAP Bank ISO OFF (In-Case of O/D)						
Earth Switch ON (In-Case of O/D)	√				DPI	
Earth Switch OFF (In-Case of O/D)						
Trip coil Ckt Healthy - 1 & 2	√				SPI	
Spring Charge	√				SPI	
Auto Trip(86) Operated	√			√	SPI	
SF6 Pressure Low & SF6 Lock Out of all chambers	√				SPI	
VT fuse Blown	√				SPI	
Cap Discharge Time	√				SPI	
Netural Displacement	√				SPI	
Panel DC Fail			√		SPI	
L/R Switch in Local/Remote	√			√	DPI	
LBB Operated	√				SPI	
Relay Int Fault.			√		SPI	
Over Current Operated	√				SPI	
Earth Fault Operated	√				SPI	
Under Voltage Prot.Operated	√				SPI	
Over Voltage Prot.Operated	√				SPI	
BKR CLS COMMAND		√		√	DCO	
BKR OPN COMMAND				√		
Front Bus (89A) ISO OPNCOMMAND (In-Case of O/D)		√			DCO	
Front Bus (89A) ISO CLS COMMAND (In-Case of O/D)						
Rear Bus (89B) ISO CLS COMMAND (In-Case of O/D)		√			DCO	

Rear Bus (89B) ISO OPN COMMAND (In-Case of O/D)						
CAP Bank ISO OPN COMMAND (In-case of O/D)		√			DCO	
CAP Bank ISO CLS COMMAND (In-case of O/D)						
3Phase R,Y,B - Current& Voltage,Reactive Power,Neu.Current	√				AI/MV	
Fault current and phase indication of faulty phaseviz. R,Y,B, Earth, Unbalance(O/C & E/F Relay).Fault voltage and phase indication of faultyphase viz. R,Y,B (Voltage Protection Relay). Fault Differential and Bias current in Line and Transformer Differential Relay ,Fault distance (In Distance Relay) ,Disturbance Records, Fault Graphs for Remote diagnosis purpose	√				AI	
Total Signals - BCPU & RTU	26 DI + Analog Measurand Values	9 DO	2DI	10DI + 10 DO		
Essential inbuilt Spare in BCPU,BCU	6 DI	3 DO				

Signals - BUS PT-1&2	Digital Input/AI soft through N:Relay/BCU	Digital OutPut soft through N:Relay/BCU	Digital Input/Output Hard Wire to RTU	Additional signals Hard wire toRTU for backup	Signal Type	Protocol
BUS A (89A) ON	√			√	DPI	IEC-61850 with Dual Communication Ports
BUS A (89A) OFF						
BUS B (89B) ON	√			√	DPI	
BUS B (89B) OFF						
Earth Switch (89LE) - 1 ON	√				DPI	
Earth Switch (89LE) - 1 OFF						
Earth Switch (89LE) - 2 ON	√				DPI	
Earth Switch (89LE) - 2 OFF						
BUS-A ISO OPN COMMAND		√		√	DCO	
BUS-A ISO CLS COMMAND						
BUS-B ISO OPN COMMAND		√		√	DCO	
BUS-B ISO CLS COMMAND						
Total Signals - BCPU & RTU	8 DI	4 DO		4DI+4DO		
Essential Spare in BCPU	2 DI	1 DO				

Signals - Smoke Detector - ALL Sensors,Manual Call Points Integration with RTU over MODBUS TCP/IP Protocol.	Soft Signals	Signal Type	Protocol
All Sensors Alarm operated Signals(10 to 20 Sensors)	√	SPI	MODBUS Serial (or)TCP/IPProtocol with Dual Communication Ports
All Manual Call Points - MCP-1,MCP-2,etc...	√	SPI	

Technical Specification for SCADA interface work & Automation

Signals - Battery Charger	Digital Input/AI soft through RTU	AI from Transducer(4 to 20MA) /AI Hard wire signal to RTU	Signal Type	Protocol
CHG A AC M/F CUM AC U/V	√		SPI	Modbus Serial Rs485 RTU Protocol with Dual ports
CHG A AC OVER VOLTAGE	√		SPI	
CHG A RECTIFIER FUSE BLOWN	√		SPI	
CHG A FILTER FUSE BLOWN	√		SPI	
CHG A DC MCB TRIP/OFF	√		SPI	
CHG A DC UNDER VOLTAGE	√		SPI	
CHG A DC OVER VOLTAGE	√		SPI	
CHG A FLOAT	√		SPI	
CHG A BOOST	√		SPI	
CHG A DC FAIL	√		SPI	
CHG B AC M/F CUM AC U/V	√		SPI	
CHG B AC OVER VOLTAGE	√		SPI	
CHG B RECTIFIER FUSE BLOWN	√		SPI	
CHG B FILTER FUSE BLOWN	√		SPI	
CHG B DC MCB TRIP/OFF	√		SPI	
CHG B DC UNDER VOLTAGE	√		SPI	
CHG B DC OVER VOLTAGE	√		SPI	
CHG B FLOAT	√		SPI	
CHG B BOOST	√		SPI	
CHG B DC FAIL	√		SPI	
BATTERY MCCB TRIP/OFF	√		SPI	
DC system Earth	√		SPI	
Insulation fault	√		SPI	
Charger A AC INPUT CURRENT	√		AI	
Charger A AC INPUT VOLTAGE	√		AI	
Charger A DC OUTPUT CURRENT	√		AI	
Charger A DC OUTPUT VOLTAGE	√		AI	
Charger B AC INPUT CURRENT	√		AI	
Charger B AC INPUT VOLTAGE	√		AI	
Charger B DC OUTPUT CURRENT	√		AI	
Charger B DC OUTPUT VOLTAGE	√		AI	
Battery Current	√		AI	
Battery Load Voltage	√		AI	
Battery Voltage from Transducer		√	AI	4 to 20 MA O/P
Battery Current from Transducer		√	AI	

Signals - LT Board	Digital Input Hard Wire to RTU	MFM data through Modbus protocol	Signal Type & Meter OP ⇨ Modbus with Dual Ports.
LT AC Fail	√		SPI

R,Y,B Phase Current		√	AI

Signals - Fire Fighting(All Transformers)	Digital Input Hard Wire to RTU	Signal Type
SYSTEM OPERATED	√	SPI
SYSTEM OUT OF SERVICE	√	SPI
TCIV CLOSED	√	SPI
FIRE DETECTOR TRIP	√	SPI
N2 CYLINDER PRESSURE LOW	√	SPI
FIRE SYSTEM ALARM	√	SPI
DC SUPPLY FAIL	√	SPI

MFM - BUS PT-1 & 2 Signals (Front & Rear BUS)	Data Type	Protocol
R-Phase Current	MV/MFI	Modbus Serial Rs485 RTU
Y-Phase Current	MV/MFI	
B-Phase Current	MV/MFI	
Neutral Current	MV/MFI	
R-Y Phase Voltage	MV/MFI	
Y-B Phase Voltage	MV/MFI	
B-R Phase Voltage	MV/MFI	

MFM - Signals - All Feeders (Including Bus Section/Coupler OF 11/33/66 KV)	Data Type	Protocol
R-Phase Current	MV/MFI	Modbus Serial Rs485 RTU
Y-Phase Current	MV/MFI	
B-Phase Current	MV/MFI	
Neutral Current	MV/MFI	
R-Y Phase Voltage	MV/MFI	
Y-B Phase Voltage	MV/MFI	
B-R Phase Voltage	MV/MFI	
Active Power	MV/MFI	
Active Energy	MV/MFI	
Reactive Power	MV/MFI	
Power Factor	MV/MFI	
Maximum Demand	MV/MFI	
Phase angle 1	MV/MFI	
Phase angle 2	MV/MFI	
Phase angle 3	MV/MFI	
THD Mean Current	MV/MFI	
THD Mean Voltage	MV/MFI	

Note1 : Suitable Heavy Duty Relay /Contactor's with free Wheeling Diode to be placed in between RTU- DO card & Trip/Close Coil circuits of respective breakers for all breaker /Isolator open & Close circuits..It should be placed either at RTU (or) Breaker panel end.Its Potential free contact will be connected in the Closing/Tripping Coil Circuits.

Note 2: Incase of Indoor GIS Panel then all SF6 Low/Lockout of all chamber signals(Approximately 10 to 15 signals per chamber) to be wired up to RTU.
Note 3: PQA (Protocol – Modbus TCP IP/IEC-61850 with dedicated switch to be offered for communication with RTU as well as Router) & Lithium Ion Signal will be finalized at the time of drawing review.
Note4: All Panels - IRF, DC FAIL SIGNALS can be preferred to terminate with adjacent relays to avoid hard wiring.

2.8.1. Comments -

Analog signals (Fault Current levels, Disturbance records, Fault graphs for remote diagnosis, etc.)from Numerical relays needs to be confirmed by vendor before finalize the tender documents.

All the above mentioned signals (Refer Signal List -2.8) including Notifier / Smoke Detector Signalare compulsory and additional signal (10%) will be considered during detailed engineering.

Following indications data format should be configured as a DPS (Double point Status) in Relay (BCPU).

- All Feeders Circuit Breaker ON & Circuit Breaker OFF
- All Feeders BUS Isolators (89A, 89B, 89L, 89T) - ON & OFF
- All Earth Switches ON & OFF

Following command data format should be configured as a DPC (Double point control) inRelay (BCPU).

- All Feeders Circuit Breaker - Open & Close
- All Feeders BUS Isolators (89A, 89B, 89L, 89T) - Open & Close
- All Earth Switches – Open & Close.

3.0 Key Points -

1 All SCADA equipment viz. DAU / DCU, MFM, Battery Charger, A-eberle relays, etc. Should be powered through auxiliary supply of 48 V (or) 220 Volt DC.

2 Power Supply for Routers/ Gateway (IT Equipment) through an existing battery bank via DC to DC Converters (Input: 48 VDC/220 VDC, Output: 12 Volt DC) or as per the requirements of Routers.

Converter 01 Specifications: Input 220 Volt DC & Output 12 to 48 Volt DC

Converter 02 Specifications: Input 220 Volt DC (or) 48 Volt DC & Output 12 Volt DC

3 Any other wiring / cabling if required due to non availability of serial communication /MODBUS/IEC 61850 protocols (with justified reason) should be hardwired and that is in Contractor's scope.

4 All Fire Suppression signals to be consider as a hard wire and terminated up to RTU.

5 Suitable transducers with an output of 4-20 mA have to be installed in the RTCC /Battery charger if required and the outputs of these transducers should be extended to terminal for further extension to the RTU.

6 STATION BUS : Topology
- IED to Switch : PRP Network/Protocol with CU (or) FO Ports.
- Redundant Ring with Ethernet /Copper Cable – Switch to Switch & LIU.
- Redundant Ring with Fiber Optic Cable – From Switch/LIU to RTU/Gateway.
- Note: Ring Network topology will be decided during the detail engineering stage.

7 The C & R ,RTCC, Battery Charger Panel should have additional spare contacts (potential free)for all SCADA signals,– **Refer Signal List 2.8**

8 **Data Base File must be down-loadable and Up-loadable from RTU, CPU, BCPU, BCU and Gateway.**

9 **Separate Room/Cabinet with AC for RTU and IT Equipment.**

10 ***Warranty (5 Years) for SCADA products - All Supplied SCADA material should cover warranty for the duration of 5 years & Warranty period will start after successful commissioning of the SCADA equipment at site. If any SCADA materials found faulty during warranty period should be replaced within two weeks.***

11 **Training at Lab/Factory** should be provided on configuration, installation, commissioning aspects of RTU,DCU,BCPU and Numerical Relay at your training/work center to the BSES SCADA team (4 to 5 persons) at factory/training center(5 days) comes under Vendor's scope.

Training documents to be submitted for approval & Documents should contain all the necessary installations,connections and Data Base development procedure & further trouble shooting procedure,etc..shall also be provided in the manual.

Training at Site: Vendor shall provide One trainer at site for training after commissioning of SCADA RTU at site.

12 **Spares:** loose Spare Materials for following items with below mentioned quantity to besupplied for emergency back up/maintenance purpose.
- CPU (Main Processor) with Ethernet Interface Card/Memory in RTU – 1 No
- CPU(Main Processor Module in BCPU) – 1 No
- Gateway – 1 No
- RTU Rack – 1 No
- BCPU with Rack – 1 No
- Communication Module for IEC-103 & Modbus Communications with Serial InterfaceCard/Memory in RTU – 1 No
- DO Contactots – 10% of supplied qty.
- DI/DO/AI/ Cards in RTU – 10% of the total IO signals
- DI/DO/AI/ Cards in BCPU – 10% of the total IO signals
- PSU Cards in RTU – 1 No

- Ethernet Switches (AS PER SA) – 2 No's
- LIU Unit – 1 No
- Fiber Optic Patch Cards with Connectors - 20% of total installed cables.
- MFM – 5% of Supplied Qty.
- FO Armored Cable with connectors – 100 Mtrs
- DC to DC converters if any for RTU Supply – 1 No.

13 **Protection devices for all SCADA Equipmentes –**

- Surge Protection devices installation between RTU & MFM Serial loops.
- SPD for Main DC Source.
- HDR/Inter Posing Relay for all Digital Output Signal's.
- All modules (All Digital, Analog Input modules in BCPU and RTU) and ports (Serial andEthernet ports) must have in-built or external surge protection devices and optical isolation.

14 System Architecture : System Architecture should be submitted at the time of tenderingprocess.

15 Following tools to be supplied

- laptop 1 No to be supplied with following specification
  15G8# 4U8T5PA Processor:- Intel i7 11800H, 11th Gen, RAM:-16 GB DDR4, SSD:- 1 TB , Ethernet: Giga bit network connection, Bluetooth 4.1, Camera:720p HD, Diplay :- 15.6" FHD, Graphics :- Intel UHD Graphics, Audio :- Stereo with Dolby, Integrated dual digital aray microphone, Mouse : Wired Optical, Battery life :- Up to 8.7 Hours, with OS WIN10 Pro with license & MS office with license , Laptop carry bag, 64 Bit along With 5 years On-site warranty.

16 Drawings/GTP shall be submitted to BRPL-3 Sets hardcopy for approval in the event of awardof work.

17 As Built Drawings 3 Sets Hard copy and 2 set in Pen drive shall be submitted at the time of Handover of project for Final billing.

18 DB back up along with Software in Pen drive shall be handover at the time of Handover of project for Final billing.

19 **All the above features are indicative only and detailed engineering and deviation shall be analyzed just before actual procurement and with discussion through a supplier/ vendor.**

4.0 System Architecture Diagram

The Tentative System Architecture diagram is enclosed for reference. It will be revised during the approval stage of drawings..

5.0 PACKING AND SHIPMENT

Shall be packed such that protected against corrosion, dampness, heavy rains, breakage and vibration in GPS Enabled Vehicle and shipment status through GPS Device shall be sent to BRPL Project incharge Via SMS/Email.

6.0 QUALITY ASSURANCE

Factory Acceptance Test : BRPL executives shall be visiting the vendors factory for inspection of Supply material. Travel Ticket (return flight), local travel, boarding and lodging shall be in vendor's scope.

Field Quality Plan : Vendor shall submit a field quality paln for approval of buyer before taking up the execution work at site.

7.0 DEVIATIONS

Deviation from this specification, if any, shall be clearly brought out in the offer. Unless the owner explicitly accepts such deviations, it shall be considered that the offer fully complies with the specification.No deviations will be acceptable post order.

TECHNICAL SPECIFICATION

FOR

11KV AUTO SWITCHED CAPACITOR BANK INDOOR / OUTDOOR TYPE

1.0 SCOPE OF SUPPLY

a. This specification covers the design, manufacturing, testing, supply, erection & commissioning of 7.2 MVAR (One fixed step of 1.8 MVAR and three steps of 1.8 MVAR) or 3.6 MVAR (One fixed step of 1.8 MVAR and one step of 1.8 MVAR) 11KV three phase outdoor / indoor Auto Switched Capacitor Bank with bus bar arrangement at site for outdoor/indoor installation on structure/panel including but not limited to 0.2% series reactors, capacitor switch/vaccum contactor, motorized isolator cum earth switch, LA, HT fuses, RVT, Automatic power factor controller and all necessary equipment for auto switching.
b. Each Capacitor Bank shall be fenced as per Civil Specification.
c. This specification shall be used in conjunction with all specifications, data sheets, single line diagrams, and other drawings attached to the tender.

2.0 CODES & STANDARDS

Indian Electricity Rules	
Indian electricity act	
CBIP manual	
IS 13925 part 1,2 & 3	Shunt capacitors above rated voltage 1000v
IS 11298 part 3	Plastic films for capacitors
IS 9921-1985	Isolator
IS 5553	Series reactor
IS 2099	Bushings for voltages above 1000v
IS 12672	Internal fuses & disconnector for shunt capacitors
IS 2705 & IS3156	Current transformers & RVT
IS 13067	Imp regnant for power capacitors
IS5	Color of mixed paints
IS 15086	Surge arrestor
IS 3070 (Pt 3)	Surge arrestor
IS 2629	Recommended practice for Hot dip galvanizing of steel
IS 4759	Hot dip Zinc coating on Steel structures and other allied products
IEC 60871	Shunt capacitors for AC power Systems
IEC 61000	Automatic Power Factor Controller
IS 9920-2002	Vacuum Contactors/Capacitor Switch

In the event of direct conflict between various order documents, the precedence of authority of documents shall be as follows -

i. Guaranteed Technical Particulars (GTP)
ii. Specification including applicable codes, standards
iii. Approved Vendor Drawings
iv. Other documents

3.0 SERVICE CONDITIONS

3.1	Max Ambient Temperature	50 deg C
3.2	Max Daily average ambient temp	40 deg C
3.3	Min Ambient Temp	0 deg C
3.4	Maximum Humidity	95%
3.5	Minimum Humidity	10%
3.6	Maximum annual rainfall	750 mm
3.7	Average no of rainy days per annum	60
3.8	Rainy months	June to Oct
3.9	Altitude above MSL	300 M
3.10	Seismic Zone	IV

4.0 CAPACITOR BANK

4.1	Capacitor Scheme	3 Phase, 7.2MVAR @ 11KV (One fixed step of 1.8 MVAR and three steps of 1.8 MVAR) or 3 Phase, 3.6MVAR @ 11KV (One fixed step of 1.8 MVAR and one step of 1.8 MVAR)
4.2	Switching	Auto switching of steps shall be done by capacitor switch/vaccum contactor and controlled by APFC relay mounted in 11kV Capacitor switchgear panel.
4.3	Service location	Suitable for outdoor/Indoor use
4.4	Connection	Refer SLD.
4.5	Residual Voltage Transformer (RVT)	Connect RVT for each step.
4.6	HT capacitor bank assembly	a. Individual single phase capacitor units mounted on steel stand / rack & connected externally by sleeved flexible copper connectors to form double star. b. Sleeves to be Red, Yellow, Blue, & Black in color.
4.7	Interchangeability	Between various single phase capacitor units without disturbing other units
4.8	Enclosure size	To be provided by vendor
4.9	External hardware for HT capacitor bank enclosure (nuts/bolts/handles)	Stainless steel

4.10	Series Reactor	Each phase each step shall be provided with suitable series air cored reactor.
4.11	Rated current	The reactor shall be rated for 130% continuous current. The short time rating shall be 16 times the normal current for 2 sec.
4.12	Sizing	Reactors shall be suitably designed to limit overloading due to presence of harmonics in the system as per recommendations of IS13925. Design calculation shall be submitted at the time of drawing approval
4.13	GA drawing	Manufacturer shall submit the G.A. Drawings for Capacitor Bank with mounting of series reactor inside the bank.

5.0 COMPLETE ENCLOSURE FOR CAPACITOR BANK

5.1	**For Indoor Installation**	All the equipments shall be enclosed in the Cubical panel. Panel shall have IP55 Canopy shall be provided over all the panels. Thickness of panel shall be 2.5mm
5.2		There shall be one incomer panel for Isolator and LA. All other panels shall be each of 1.8Mvar. Total 7.2Mvar.
5.3	Bus bar material	Tinned copper, sized for 150% of rated current and rated fault duty
5.4	Bus bar arrangement	Suitable for outdoor termination of HT cable size up to 2 x 3C x 300sqmm for each phase
5.5	Indications on panel Front door	
5.6		Breaker ON
5.7		Breaker Off
5.8		Breaker Trip
5.9		Capacitor Bank ON
5.10		Capacitor Bank OFF
5.11	**For Outdoor Installation**	
5.12		For enclosing complete capacitor bank including Isolators, LA, cable structure, capacitor units, Reactors, flexible copper connectors, NCT/RVT & terminal bus bar. Enclosures shall be provided with solenoid type interlock switch with timer.
5.13	Enclosure mounting	Free standing on RCC plinth / slab

5.14	Enclosure Material	Steel
5.15	Degree of enclosure protection	IP55(In case of Vacuum Contactor Only, Rest must be wire mesh enclosure)
5.16	Enclosure	Wire Mesh Enclosure – Ref.Cl.16 of Technical spec of Civil work
5.17	Bus bar for HV cable termination	One for each phase mounted on porcelain or epoxy insulators
5.18	Bus bar material	Tinned copper, sized for 150% of rated current and rated fault duty
5.19	Bus bar arrangement	Suitable for outdoor termination of HT cable size up to 2 x 3C x 300sqmm for each phase

6.0 SINGLE PHASE CAPACITOR UNIT

6.1	Single phase capacitor unit	Totally enclosed, leak proof, dust proof suitable for outdoor application, comprising individual capacitor elements connected in series & parallel groups. Continuous operating current shall be minimum 1.43 times to max. 1.65 times as per clause 6.2 of IS 13925.
6.2	Capacitor unit size	Preferred size is 200kVAR, however higher unit sizes may be considered if the space availability at site is scarce
6.3	Capacitor element	Developed from alternate layers of conducting metal foil & dielectric film
6.4	Conducting layer material	Aluminum foil
6.5	Dielectric material	Hazy Poly Propylene (APP), Double layer minimum
6.6	Cooling	Natural air
6.7	Impregnating liquid	Non PCB(Poly chlorinated Biphenyl), less toxic, with low bio-accumulation and bio-degradable liquid filled under vacuum
6.8	Capacitor unit enclosure	Fabricated from sheet metal CRCA steel of thickness 2mm minimum, hermetically sealed & hydraulically tested
6.9	Discharge device	For each single phase capacitor unit
6.10	Internal fuse	Metal alloy fuse of suitable rating as per IS 12672 should be provided for each capacitor element. Residue of fuse after operation shall not contaminate the impregnating liquid. The fuse shall not deteriorate when subjected to inrush current. The fuse assembly shall be distinct and separate from the element packs such that it shall isolate only the faulty element packs and the operation of a fuse under worst condition

		does not affect the other healthy elements.
6.11	Surge arrestor	Gap less metal oxide type
6.12	Rated voltage	9kV
6.13	Maximum continuous operating voltage	7.65kV
6.14	Discharge current	5kA
6.15	Spare capacitor unit	One capacitor unit for each bank

7.0 RESIDUAL VOLTAGE TRANSFORMER

7.1	Neutral current transformer	For outdoor/Indoor application, hermetically sealed
7.2	Voltage class	Suitable for system rated voltage
7.3	Ratio	10/1/1
7.4	Accuracy class	0.5 / 5P10
7.5	Burden	15VA / 15VA
7.6	Material	Cast resin
7.7	Mounting	On RCC slab/plinth, near capacitor unit steel stand
7.8	Terminal marking	To be provided on RVT enclosure
7.9	Primary terminals	Brought out of RVT enclosure through insulator bushing of voltage class equal to rated capacitor voltage
7.10	Secondary terminals	Brought out in a terminal box mounted on RVT enclosure
7.11	Secondary terminal box	Suitable for degree of protection IP55 with cable entry for 6c x 2.5sq mm YWY 1100volt grade cable
7.12	Residual Voltage Transformer	Oil Cooled Type
7.13	Connection	Star/Star-Open delta winding (11Kv / Sqrt3 : 110V/Sqr 3:190V
7.14	Accuracy Class	0.5/3 PR
7.15	Nominal and Highest System Voltage	11 & 12 kV

8.0 LIGHTNING ARRESTER

8.1	Installation	Outddoor/Indoor
8.2	Type	Metal Oxide
8.3	Arrestor Rating	9kV (rms)
8.4	Maximum continuous operating voltage	7.65kV (rms)
8.5	Nominal Discharge current	10kA
8.6	Class	Station Class III

9.0 VACUUM CONTACTOR/SWITCH FOR AUTO SWITCHING

9.1	Rated Voltages	11 KV
9.2	Rated Continuous Current	200% of full load current (minimum) of unit being switched
9.3	Rated Capacitor Switching Current	150% of full load current (minimum) of unit being switched
9.4	Frequency	50 Hz
9.5	Control supply	230 V Single phase AC supply
9.6	Type	Vacuum
9.7	Installation	Outdoor / Indoor
9.8	Mechanical Endurance	100000 operations (minimum)
9.9	Electrical Endurance	100000 electrical operations at rated capacitive switching current (minimum) without getting damaged.
9.10	Mechanical Indicator	To show number of operations and to show whether the contact is in open/closed position.
9.11	Trip lever	For emergency tripping operation
9.12	Closing lever	For capacitor bank discharging
9.13	Make	ABB/EPCOS/CGL

10.0 SERIES REACTOR

10.1	Series Reactor	Shall be provided fulfilling following requirement, a. Parallel switching of one bank with another two bank in service b. Suitable design calculation shall be submitted at the time of drawing approval c. Reactors shall be suitably designed to limit inrush current with proper calculation to be submitted to BRPL. d. The series reactor shall be designed to suit the final capacity of Capacitor Bank e. The manufacturer shall submit the G.A. Drawings for Capacitor Bank with mounting of series reactor inside the bank
10.2	Series reactor continuous rating	0.2% of each 1.8Mvar step
10.3	Series reactor rated voltage	Same as capacitor bank rated voltage
10.4	Series reactor rated frequency	50Hz
10.5	Series reactor single phase unit connections	Connected between single phase capacitor units and neutral star point
10.6	Series reactor type	Dry type with air natural cooling
10.7	Series reactor power frequency withstand voltage	28 KV
10.8	Series reactor lightening impulse withstand voltage	75 KV
10.9	Series reactor short time withstand current rating for 3 seconds	16 times capacitor rated current at 130% rated voltage

11.0 AUTOMATIC CONTROL UNIT

11.1	**General Construction Requirements of Automatic Control Unit**	The Automatic control unit shall be provided inside the control room to continuously monitor power factor on secondary side of the transformer and shall automatically switch ON or switch OFF the capacitor banks through the operation of 12Kv Capacitor switch. Overriding provision shall also be made for electrical switching ON & OFF of the capacitor switch by the operator from the ACU control box. The switching ON operation will take place after period of 10 minutes. The switching OFF operation of relevant steps will be instantaneous.

11.2		The ACU shall instantly switch OFF the incomer VCB of capacitor bank in the following contingencies occurring in any of the phases. a) Voltage increased by 10% above the rated voltage of 11Kv. b) Power transformer current impedance between any of the two phases exceeding 20% of the lowest. c) Current increase in any capacitor unit by 30% above the rated current (only relevant capacitor switch will open) d) Current between any of the two phases of the capacitor bank differs more than 15% of the lowest current of the 3 phases (only the relevant capacitor switch will open)
11.3		A suitable display should be provided to indicate the capacitor current in each phases of the complete capacitor bank on the ACU panel inside the control room. Indications shall be provided to indicate ON & OFF status of each capacitor bank. The DC control Voltage for operation of the ACU shall be taken from substation DCDB. The required control voltage shall be either 50VDC or 220VDC.
11.4		Besides in-built protection against lines surges and transient over voltages, suitable fuses/MCB shall be provided for protection against overcurrent. The ACU shall remain fully functional during and after line surges and transient over voltage. Except for the terminal, the ACU shall be enclosed in a suitable casing so as to avoid ingress of dust and should be IP54.

12.0 ISOLATOR

12.1	Installation	Outdoor / Indoor
12.2	Rated Voltage	11 KV
12.3	Type	Single throw, Double break, off load type, triple pole and horizontal gang operated with earth switch. Mechanical interlock should be provided between isolator and earth switch.
12.4	Operation Type	Manual
12.5	Creepage Distance	31mm/kV

13.0 PERFORMANCE

13.1	Over voltage operation	as per IS 13925 part1
13.2	Over current operation	as per IS 13925 part1
13.3	Operating temperature category	+5/C as per IS 13925 part1
13.4	Discharge characteristic as per IS 13925 part1	a. Each capacitor single phase unit residual voltage after disconnection from mains supply shall be 50V (maximum) within 10 minutes b. Capacitor bank residual voltage after disconnection from mains supply shall be 50V (maximum) within 10 minutes
13.5	Power loss and tangent of Loss angle (tan δ)	To be specified by manufacturer as per IS 13925 part1

14.0 LABELS & FINISH

14.1	Rating plate for HT Capacitor bank	
	Material	Anodized aluminum 16SWG
14.2	Background	Satin silver
14.3	Letters, diagram & border	Black
14.4	Process	etching
14.5	Bank Name plate details	Mfg name, Mfg Sr. No., Month & year of Mfg, equipment type, total output rating, Bank Capacitance in µF, Bank watt losses, Owner name & order number, Temp. category, connection diagram, Guarantee period.
14.6	Unit Name plate details	Mfg name, Mfg Sr. No., Month & year of Mfg, equipment type, total output rating, unit Capacitance in µF, unit watt losses, Temp. category, Discharge device rating, connection diagram, Owner name & order number, Guarantee period, unit wt. in kG,

14.7	Danger plate on front & rear side of wired mesh enclosure	Anodized aluminum with white letters on red background
14.8	Painting - Capacitor single phase unit	
14.9	Surface preparation	Shot blasting or chemical 7 tank process
14.10	External finish	Powder coated pure-polyester base Mat finish, shade– Siemens Gray RAL 7032, uniform thickness 50 microns minimum
14.11	Painting– Wire-mesh, frame enclosure	a. Chemical 7 tank process for surface b. Hot dipped Galvanized with uniform thickness 65 microns minimum as per IS 2629 and 4759.

15.0 INSPECTION & TESTING

15.1	Type test	Equipment of type tested quality only, type test certificate to be submitted along with offer.
15.2	Routine test	As per relevant Indian standard
15.3	Acceptance test as per IS	To be performed in presence of Owner at manufacturer works, as per relevant Indian standard along with BOM.

16.0 DEVIATIONS

Deviations from this Specification shall be stated in writing with the tender by reference to the Specification clause/GTP/Drawing and a description of the alternative offer. In absence of such a statement, it will be assumed that the bidder complies fully with this specification. No deviation will be acceptable post order.

17.0 TYPICAL SCHEME OF HT CAPACITOR 3 PHASE BANK

Refer SLD (BRPL-G1DW-DEE-B-001).

18.0 MANDATORY SPARES

Following spares have to be provided with capacitor banks

a. Capacitor Units – 2 nos
b. Series Reactors – 2 nos
c. Vacuum Switch – 2 nos

Technical Specification

For

Grounding and Lightening Protection System

Specification no – BSES-TS-76-GES-R1

Rev:		1
Date:		26 July 2024
Prepared by	Supriya Raina	
	Uttam Shukla	
Reviewed by	Abhinav Srivastava	
Approved by	Gopal Nariya	

INDEX TABLE

1.# SCOPE ..... 3#
2.# STANDARDS & CODES ..... 3#
3.# REQUIREMENT OF EARTHING ..... 3#
4.# SPECIFICATION OF EARTHING MATERIALS ..... 6#
5.# SIZES OF THE EARTHING MATERIALSFOR EQUIPMENT EARTHING ..... 7#
6.# TESTING AND INSPECTION ..... 9#
7.# DEVIATIONS ..... 9#
8.# DOCUMENTS SUBMISSION ..... 9#
9.# GUARANTEED TECHNICAL PARTICULARS ..... 10#
ANNEXURE A1 : REFERENCE FAULT LEVEL ..... 11#

1. SCOPE

This specification covers the guidelines of earthing & lightening protection at 66/11, 33/11, 66/33/11 kV Grid substation and the technical requirements of material required for earthing system.

2. STANDARDS & CODES

2.1.	CEA guidelines	Technical standards for construction of electrical plants and electrical lines
2.2.		IE Rules of 1956
2.3.	IEEE Std 80	IEEE guide for safety in AC substation grounding
2.4.	CBIP :2006 – publication no. 229	Manual on substation layout
2.5.	IS 3043: 1987	Code of practice for earthing
2.6.	IS 2309 (1989)	Code of practice for the protection of buildings and allied structures against lightning [ETD 20: Electrical Installation]
2.7.	IS 2629 (1985)	Recommended practice for hot dip galvanizing of Iron & Steel
2.8.	IS 2633 (1986)	Method for testing uniformity of coating on zinc coated article
2.9.	IS 5358 (1969)	Specification for hot dip galvanized coating on fasteners
2.10.	IS 4759 (1996)	Specification of Hot dip zinc coatings on structural steel and other allied products
2.11.	IS 1239 (2004)	Steel tubes, tubular and other wrought steel fittings- specification
2.12.	IEC 62561-2	Requirements for conductors and earth electrodes
2.13.	IEC 62561-7	Requirements for earthing enhancing compounds
2.14.		Handbook on Electrical Earthing (Ministry of Railways)

3. REQUIREMENT OF EARTHING

3.1.	Primary guidelines	Following are primary guidelines for a good earthing system in a Grid substation: a. The impedance to ground should be as low as possible. In general it should not exceed **0.5ohm**. b. The step and touch potentials shall be within safe limits. c. The contractor shall do the calculation for number of earthing rods being used in a substation for achieving the desired earth resistance.

3.2.	Design Parameters	Earthing Calculation parameters shall be taken as: 1) Duration of shock current ts=1sec. 2) Top Gravel resistivity shall be 3000 Ohm Meter. 3) Split/ Diversion Factor shall be considered as 1 4) Earth conductor/ electrodes size calculation based upon corrosion considered for next 40 years. 5) The final diameter of earth conductors/rod shall be of calculated dia or 40 mm min; whichever is maximum (prescribed in clause 5)
3.3.	Earthing lead size	a. The actual size of earthing lead will depend on the maximum fault current which the earthing lead will be required to carry safely. b. Please refer **AnnexureA1** for HT fault level.
3.4.	Earthing type	a. Rod earthing shall be provided for the Grid substation. b. The size of the rod depends upon the current to be carried and the type of the soil. Soil resistivity testing will be carried out by vendor. c. The Earth Electrode should be embedded vertically. Wherever hard rock is encountered, the rod can be inclined at an angle of about 30deg to the horizontal as per clause 9.2.2 of IS 3043. d. The vertically driven rods shall be interconnected with each other using horizontal grid conductors.
3.5.	Earth Pit	a. As per clause 20.5.2 of IS 3043, the minimum distance between the vertical earth electrodes shall not be less than the length of rod. b. Minimum of 1m distance of earth pit from electrical equipment and structures shall be maintained. c. The earth pits shall be backfilled with earth enhancing material as per Drawing . d. Treated Earth pits shall be used where earth resistance value is getting over the prescribed value in specification i.e. 0.5 ohms. e. Treated Pipe earthing required for 2 nos. each for PTR & Station TRF neutral and RTU/ SCADA. f. 50% quantity of the total earth electrodes to be provided with earth enhancing material (Terec++/ marconite).
3.6.	Horizontal Conductor	a. The entire earth rod driven in ground vertically shall be interconnected with earth grid conductors horizontally under the ground. b. The Horizontal conductors shall be laid 600mm below FGL c. Minimum earth coverage of 300 mm shall be provided between the Horizontal conductor and the bottom of trench/foundation/underground pipe at the crossing. d. Horizontal conductors around a building /switchyard fence shall be buried outside the boundary at a minimum distance of 2000 mm. e. Risers shall be provided 300mm above the ground level for equipment earthing. Two number treated earth pits shall be provided with riser for connection of transformer neutral. f. Welding between rods to flat, flat to flat should be arc welding type.For rust protection the welds should be treated with red lead compound and afterwards thickly coated with bitumen compound. g. Wherever bolted connection is done, it shall be done through two bolts at each joint to ensure tightness and avoid loosening with passage of time.

		h. Where a 66 kV overhead line terminates at the substation, a metallic continuity between the end tower and the substation earth grid should be established with two independent connections. i. To ensure good welding, it should be carried out only after scratching off the galvanization, dirt, grease etc by thorough cleaning of contact surface. After welding it will be made with anticorrosive zinc rich paint.
3.7.	Equipment earthing	a. GI strips shall be used for the equipment earthing. b. Two separate and distinct earth connections shall be provided for earthing of electrical frameworks. c. The connection of GI strip with riser of earth mat shall be electric arc welding arrangement; connection of equipment with earthing end shall be double bolted arrangement. d. The transformer neutral shall be earthed with two independent grounding conductors connected to two separate earth pits. e. Fence within the earth grid shall be bonded to the plant earth system at regular interval not exceeding 10 meters. Fence gate shall be separately earthed with flexible Copper braid to permit movement. f. Bolted connection shall be made only for earthing of equipment/devices and for some removable structures. The contact surfaces shall be thoroughly cleaned before connection to ensure good electrical contact. g. Cable armor shall be earthed at both ends for multi core cables. For single core cables, the earthing shall be at switchgear end only. h. For prefabricated cable trays, a separate ground conductor shall run along the entire length of cable tray and shall be suitably clamped on each cable tray at periodic intervals. Each continuous laid out lengths of cable tray shall be earthed at minimum two places by GS flats to Owner's earthing system, the distance between earthing points shall not exceed 30 metre. Wherever earthmat is not available Contractor shall do the necessary connections by driving an earth electrode in the ground. i. Earthing conductor's crossings the road shall be installed at 1000 mm depth and where adequate earth coverage is not provided it shall be installed in Hume pipes. Earthing conductors embedded in the concrete floor of the building shall have approximately 50mm concrete cover. j. Metallic stairs and hand rails shall be earthed as for columns. Additionally a 50x6 GI flat shall run the entire length of the stairs. The GI flat shall be welded to the stairs and hand rails at intervals of 1500 mm. k. The main earth conductor shall be securely fixed to the columns /walls/trays by welding /clamping at the intervals not exceeding 1500 mm. The earth conductors shall be interconnected between them and to the main earth grid through risers. l. **In case of GIS substation, earthing rods to be considered in RCC floor as per GIS OEM recommendation.**
3.8.	Lightening protection	a. Direct stroke lightning protection (DSLP) shall be provided in the EHV switchyard by shield wires/ High mast spike gaurd. The final arrangement shall be decided after approval of the DSLP

		calculations. The Contractor is required to carry out the DSLP calculations and submit the same to the Owner for approval of the same at detailed engineering stage after award of contract. b. DSLP protection shall be provided for control room building as per design calculation following Indian standards. The down conductor should be high conductivity bare copper tape with minimum size of 75 sqmm. c. Connection between each down conductor & Test link shall be located approximately 2000mm above ground Level. d. Separate earth electrodes shall be provided for building DSLP connecting the down conductors to the risers & finally to the Earthmesh. Minimum electrodes to be provided – 4 Nos.

4. SPECIFICATION OF EARTHING MATERIALS

4.1.	GI earthing strip	a. Fully galvanized iron strips shall be used conforming to IS 2629. b. The zinc deposition shall not be less than 610gm/sqm of the galvanized surface area of the MS Earthing strips. c. The zinc coating used for the galvanization shall be of 9.99 % purity grade as per IS 209. d. All the galvanized material shall be checked for uniformity and weight as per IS. e. The standard length of galvanized iron earthing strip shall be minimum 7Mtrs.
4.2.	Vertical and Horizontal Earth Electrode	a. Ground electrode shall be 3 m long MS rod of required size complying with Zinc coating and earth enhancement compound as per IEC 62561-7. b. Rod shall be tested and certified from CPRI/ERDA for a short circuit current withstanding of desired value. c. There shall be following marking on the rod-Dimension Detail, product model no, Reference number of certification. d. It shall have high corrosion resistance and shall eliminate electrolytic action.

5. SIZES OF THE EARTHING MATERIALSFOR EQUIPMENT EARTHING

S.No.	Title	Material	Sizes of the earthing	Type	UOM	No of Lead
A	**Main Earthing Grid**					
5.1	Vertical Rods	MS rod	40	Rod	mm (dia)	
5.2	Above Ground risers	GI	50x10	Flat	Sqmm	2
5.3	Horizontal Rods	MS rod	40	Rod	mm (dia)	
5.4	Treated Earth Pit	MS rod	40	Rod	mm (dia)	
B	**Power Transformers**					
5.5	Frame	GI	75X10	Flat	Sqmm	2
5.6	Marshalling Box	GI	50X6	Flat	Sqmm	2
5.7	Radiator	GI	50X6	Flat	Sqmm	2
5.8	Neutral	GI	75X10	Flat	Sqmm	2
5.9	Fan	GI		As per sizes mentioned for fans		
B	**Capacitor Bank**					
5.10	Capacitor Bank Structure	GI	50X6	Flat	Sqmm	2
5.11	Capacitor unit and reactors	GI	50X6	Flat	Sqmm	2
B	**Outdoor equipments**					
5.12	Outdoor Circuit breaker, CT, PT & CVT	GI	50X6	Flat	Sqmm	2
5.13	Secondary terminal Box of outdoor CT, PT & CVT	GI	50X6	Flat	Sqmm	2
5.14	Isolator Mechanism box, earth switch box	GI	50X6	Flat	Sqmm	2
5.15	Gantry tower and structure	GI	75X10	Flat	Sqmm	2
5.16	Earthing Strip along with Cable	GI	50X6	Flat	Sqmm	2

	Tray					
5.17	Electronic Earthing	Separate design and installation for all communication devices and electronic equipments including SCADA RTU, MOXA, Router/Switch. As per recommendation of SCADA vendor				
C	**11 KV System**					
5.18	11 KV Swithcgear	GI	50X6	Flat	Sqmm	2
5.19	11 KV Bus Duct	GI	50X6	Flat	Sqmm	2
5.20	11 KV Cable Box	GI	50X6	Flat	Sqmm	2
D	**415 V System**					
5.21	ACDB	GI	50X6	Flat	Sqmm	2
5.22	Station Trafo Frame	GI	50X6	Flat	Sqmm	2
E	**DC System**					
5.23	Battery Charger	GI	50X6	Flat	Sqmm	2
5.24	DCDB	GI	50X6	Flat	Sqmm	2
F	**Other Electrical Items**					
5.25	Three phase receptacles, welding outlet	GI	50x6	Flat	Sqmm	1
5.26	C&R Panel	GI	50X6	Flat	Sqmm	2
5.27	Push Button	GI	8	Wire	Swg	1
5.28	Cable Trays(one run along the tray section)	GI	50X6	Flat	Sqmm	2
6	**Other Non Electrical Items**					
5.29	Railway Tracks	GI	50x6	Flat	Sqmm	At suitable Points
5.30	Metallic noncurrent carrying structures like stair case	GI	50x6	Flat	Sqmm	1
5.31	Columns, Structures	GI	50X6	Flat	Sqmm	2

5.32	Steel pipe racks	GI	50x6	Flat	Sqmm	1
5.33	Fence/Gate	GI	50X6	Flat	Sqmm	As per clause 3.7 (e)
5.34	Hand Rail	GI	8	Wire	Swg	1

6. TESTING AND INSPECTION

6.1.	Earthing materials	a. The purchaser reserves the right to inspect the material at the time of tests. All tests shall be performed in the presence of BYPL/BRPL representative. The bidder shall give intimation in advance to witness the test. b. Acceptance test for GI earthing strips – Tests for Visual examination, dimensional verification and galvanization shall be witnessed at the time of inspection. c. Acceptance test of Earth enhancement compound – Tests for leaching, sulphur determination, corrosion and resistivity shall be done as per IEC 62561-7 d. Type test reports of the earthing materials from CPRI/ERDA/Equivalent lab shall be submitted.
6.2.	Measurement of Earth resistance	a. After the completion of work ground resistance of each installation shall be measured by BYPL/BRPL/Contractor. b. The measurement of resistance shall be witnessed and signed by representative of BYPL/BRPL as well as the contractor. The test certificates shall be generated for each installation clearly indicating the details of the transformer, name of the substation, location, district, serial no. of testing equipment and name of testing engineer. c. The desire ground resistance shall be measured after interconnection of earth pits is completed. The value of earth resistance shall not be more than **0.5 ohm**. d. In case where this value exceeds 0.5 ohms, the earthing design shall be redesigned. The pit location, earth electrode, soil treatment, earth conductor, GI strip used shall be checked whether properly used at site. If not, these shall be changed as per the redesigned plan.

7. DEVIATIONS

7.1.	Deviation	Deviations from this Specification shall be stated in writing with the tender by reference to the Specification clause/GTP/Drawing and a description of the alternative offer. In absence of such a statement, it will be assumed that the bidder complies fully with this specification. No deviation will be acceptable post order.

8. DOCUMENTS SUBMISSION

The bidder has to submit the following documents along with bid:-

8.1.	Complete earthing calculation
8.2.	Complete product catalogue, Manual and calibration certificate of the equipment
8.3.	Type test reports
8.4.	Deviation Sheet (if any)

9. GUARANTEED TECHNICAL PARTICULARS

S. No	Parameter	BYPL/BRPL Requirement	Vendor Data
9.1	Rod to Strip welding	Arc Welding	
9.2	Zinc deposition of GI earthing Strip	610gm/sqm	
9.3	Length of GI Strip	7m (Minimum)	
9.4	Diameter of MS Rod	40 mm MS rod/calculated diameter; whichever is maximum.	
9.5	CPRI/ERDA Certification of Earthing material	Test certificate to be provided	
9.6	Coating on earthing material	610gm/sqm	
9.7	Length of MS rod	3 m	
9.8	Purity of Copper	NA	
9.9	Short circuit withstand test of Rod	31.5kA	
9.10	Marking on the rod-Dimension Detail, product model no, Reference number of certification	Sample Required	
9.11	ROHS Certificate from NABL accredited lab for not having toxic chemical in earth enhance material	Test certificate to be provided	
9.12	Resistivity of earth enhancing material	0.12 ohm-m(Max)	
9.13	Welding	Arc welding	

9.14	Make of Steel	SAIL/ESSAR/TATA	

ANNEXURE A1 : REFERENCE FAULT LEVEL

Voltage Level(kV)	Design Fault Level
66/11	31.5 KA
33/11	25 KA

BSES

Technical Specification of

LT Power Cable(Single & Multi-Core)

Specification no – BSES-TS-01-LTPC-R0

Rev:		0
Date:		31 Mar 2022
Prepared by	Abhishek Vashistha	
	Rohit Patil	
Reviewed by	Puneet Duggal	
	Amit Tomar	31/03/2022
Approved by	Gaurav Sharma	
	K. Sheshadri	31/3/22

INDEX

Contents

1.0 SCOPE OF SUPPLY 3
2.0 CODES & STANDARDS 3
3.0 CABLE DESIGN 4
4.0 CABLE DRUM 6
5.0 PACKING, SHIPPING, HANDLING & STORAGE 7
6.0 QUALITY ASSURANCE, TESTING& INSPECTION 7
7.0 DOCUMENT SUBMISSION MATRIX 8
8.0 PROGRESS REPORTING 9
9.0 DEVIATION 10
10.0 Annexure -A 11
11.0 ANNEXTURE- B 14
12.0 ANNEXTURE – C 18
13.0 ANNEXTURE – D 19

1.0 SCOPE OF SUPPLY

The specification covers design, manufacture, shop testing, packing and delivery of 1100 Volts grade, Aluminium conductor XLPE insulated power cables.

2.0 CODES & STANDARDS

The cables shall be designed, manufactured and tested in Accordance with the following Indian & IEC standards.

2.1	IS- 7098 (Part-1)	Cross linked polyethylene insulated PVC sheathed cables for working voltages upto and including 1100V.
2.2	IS- 6474	Polyethylene insulation & sheath of electric cables.
2.3	IS- 5831	PVC insulation and sheath of electrical cables.
2.4	IS : 10810	Methods of tests for cables.
2.5	IS : 8130	Conductors for insulated electrical cables and flexible cords.
2.6	IS : 3975	Low carbon galvanized steel wires, formed wires and tapes for armouring of cables.
2.7	IS- 4026	Aluminum ingots, billets and wire bars (EC grade)
2.8	IS-5484	EC Grade aluminium rod produced by continuous casting and rolling
2.9	IS : 10418	Specification for drums for electric cables.
2.10	IS : 3961	Recommended current ratings for cables.
2.11	IS:1255	Installation and Maintenance of power cables upto and including 33 kV rating.
2.12	IS:4826	Specification for hot-dipped galvanized coatings on round steel wires
2.13	IS:1717	Metallic Materials – Wire – Simple torsion test
2.14	IEC 60228	Conductors of insulated cables. Guide to the dimensional limits of circular conductors.
2.15	IEC 60331	Fire resisting characteristics of electric cables.
2.16	IEC 60332 – 3	Tests on electric cables under fire conditions. Part 3: Tests on bunched wires or cables.
2.17	IEC 60502	Extruded solid dielectric insulated power cables for rated voltages from 1kV to 30 kV.
2.18	IEC 60754 – 1	Test on gases evolved during combustion of materials from cables. Part 1: Determination of the amount of halogen acid gas evolved during combustion of polymeric material taken from cables.
2.19	IEC 60811	Common test methods for insulating and sheathing materials of electric cables
2.20	IEC 60885	Electric test methods for electric cables
2.21	IEC 60304	Standard colours for insulation for low frequency cables and wires.
2.22	IEC 60227	PVC insulated cables of rated voltages up to and including 460/760 V.

2.23	IEC 1034	Measurement of smoke density of electric cables burning under defined conditions
2.24	ASTMD 2843	Standard Test Method for density of Smoke from the burning or decomposition of cables
2.25	ASTM 2863	Standard Test Method for measuring of minimum oxygen concentration
2.26	IEC 60754-1	Test on gases evolved during combustion of materials for cables. Part 1 – Determination of the Halogen Acid gas Content
2.27	IS 1554 part 1	Specification for PVC insulated (Heavy duty) Electric cable

3.0 CABLE DESIGN

Description of each item mentioned in the specification (the text, BOQ, GTP or any site specific requirement) shall be followed along with IS: 7098 – P1

<table>
<tr><td>3.1</td><td>Conductor</td><td>a) Electrolytic Grade Stranded Aluminium Conductor
b) Grade: H2 as per IS: 8130/1984
c) Class 2
d) Chemical Composition as per IS 4026
e) Shape& Size:
<table>
<tr><th>S. no.</th><th>Shape</th><th>Single core (sq.mm)</th><th>Multi core (sq.mm)</th></tr>
<tr><td>1</td><td>Compacted Circular</td><td>• 1cx25
• 1cx95
• 1cx300
• 1cx630
• 1cx1000</td><td>• 2cx10</td></tr>
<tr><td>2</td><td>Sector</td><td>---</td><td>• 2cx25
• 4cx25
• 4cx50
• 4Cx150
• 4Cx300
• 4Cx400</td></tr>
</table></td></tr>
<tr><td>3.2</td><td>Insulation</td><td>Extruded XLPE insulation as per IS : 7098 part-1</td></tr>
<tr><td>3.3</td><td>Core Identification</td><td>a) Single Core Cable – Natural
b) Two Core Cable – Red & Black
c) Four Core Cable – Red, Yellow, Blue and Black</td></tr>
<tr><td>3.4</td><td>Inner Sheath</td><td>a) For Single Core Cable – Inner Sheath Not Required
b) For 2 Core cable- Pressurized Extruded, Black PVC type ST-2 (IS 5831-1984)
c) For 4 core cable –Extruded Black PVC type ST-2 (IS 5831-1984)</td></tr>
<tr><td>3.5</td><td>Armour</td><td>a) For 2C X 10 mm^2 – Galvanized Steel round wire.
b) For all sizes above 10 mm^2-Galvanized Steel Strip
c) Armour not required for single core cables
d) Minimum area of coverage of armouring shall be 90%</td></tr>
</table>

		e) The breaking load of armour joint shall not be less than 95% of that of armour wire / strip f) Zero negative tolerance for thickness of armour strip shall be as per IS:3975 g) Zinc rich paint shall be applied on strip/wire and its joint surface.
3.6	Outer Sheath	a) Extruded FRLS outer sheath of PVC (ST-2) shall be as per IS:5831 b) Colour : • For multi core cables-**Orange/Yellow as per tender requirement** • For single core cables **– Orange/Black as per tender requirement** c) FRLS Outer sheath of all the LT cables shall be UV resistant; as these cables are laid in air exposed to sun. Bidder to ensure the same for these requirements supported by required test. d) Shape of the cable over the outer sheath shall be circular, when manufactured/completed. e) The FRLS outer Sheath shall be embossed with following minimum text: i) The voltage designation ii) Type of construction /cable code (For e.g. A2XWY/A2XFY) iii) FRLS iv) Manufacture name/Trade mark v) Number of Cores and nominal cross section area of conductor vi) Name of buyer i.e BSES vii) Month & year of manufacturing viii) IS reference , i.e. IS:7098 ix) P.O No. and Date x) Font size shall be 5/5mm xi) ISI mark The embossing shall be progressive, automatic, in line and marking shall be legible and indelible. Following points shall be printed on every meter of cable i. Progressive (Sequential) length of cable at every meter, starting from zero for every drum. Colour filled in for the progressive marking, shall be with proper contrast in colouring. ii. Drum number marking on every meter of the cable length
3.7	Bending Radius	Bending Radius of cable shall comply to IS:1255
3.8	Sealing of cable end	Both ends of the cable shall be sealed by means of non-hygroscopic

		heat shrinkable PVC caps
3.9	FRLS Properties	Oxygen Index : Not less than 29% as per ASTM 2863
		Temperature Index : 250 Deg C at Oxygen Index 21 (when tested as per ASTM D 2863)
		Max Acid Gas Generation – Not more than 20% as per IEC -60754-1
		Light Transmission - Minimum 40% when tested as per ASTMD 2843 (Smoke Density rating shall be max 60%)
		Flammability Test – IEC 60332 part -1

4.0 CABLE DRUM

4.1	Reference Standard	Cable drum shall comply with IS: 10418.
4.2	Type of Drum	Wooden drums with anti termite treatment. (The drums shall be provided with M.S spindle plate and nut-bolts arrangement as per IS : 10418)
4.3	Drum Length & Tolerance	• For 2C X 10 mm^2 Cable - 1000+/-5% Mtr • For all Other cable sizes - 500 +/-5% Mtr
4.4	Overall Tolerance	-2 % for the total cable length for the entire order.
4.5	Short Length of Cable	a) Minimum acceptable length (Max. is 525 mtr) shall be 1 % of the total ordered qty. & no length shall be less than 250 mtr. Manufactures shall be taken prior approval from BSES Engineering for any short length supply. Short length will be accepted in last lot. b) Manufacture shall not be allowed to put two cable pieces of different short length in same cable drum
4.6	Preventive Measure for cable Drum	a) The surface of the drum and outer most cable layer shall be covered with water proof layer b) Ferrous part of wooden drum shall be treated with suitable rust preventive paint/coating to minimize rusting during storage.
4.7	Drum Identification Labels	a) Drum identification number b) Cable voltage grade c) Cable code (eg. A2XFY/A2XWY) d) Number of cores and cross sectional area e) Cable quantity i.e cable length (Meters) f) Purchase order number, date & SAP item code g) Total weight of cable and drum (kg) h) Manufacture's and Buyer's name i) Month & year of manufacturing j) Direction of rotation of drum; an arrow and suitable accompanying wording shall be marked on one end of the reel indicating the direction in which it should be rolled. k) Cable length final end-marking (i.e reading at the inner end

		and reading at the outer end, just before packing shall be marked on the drum.

5.0 PACKING, SHIPPING, HANDLING & STORAGE

5.1	Shipping information Plan	The seller shall be give complete shipping information concerning the weight ,size of each package
5.2	Transit Damage	The seller shall be held responsible for all transit damage due to improper packing/inside cable damaged found in store/site
5.3	Cable Drum Handling	The drum shall be with M.S spindle plate(with nut –bolts) of adequate size to suit the spindle rod , normally required for handling the drums , according to expected weight of the cable drums as per IS:10418

6.0 QUALITY ASSURANCE, TESTING& INSPECTION

All the tests shall be carried out in accordance with IEC / IS standards.

6.1	Quality Assurance Plan	In event of order manufacturer has to submit the signed copy of QAP.
6.2	Inspection hold points	AS per approved QAP (QAP shall be approved at the time of GTP approval)
6.3	Routine Test	a) Measurement of Electrical Resistance b) HV test with power frequency AC voltage
6.4	Type Test	**For bid participation–** (a) Bidder must be submitted cable type tested report from CPRI/ERDA/NABL approved lab for the type, size & rating of similar or higher sizes of offered cable along with bid. **After award of P.O.-** (b) If a bidder has valid type test report from CPRI/ERDA lab for the type, size & rating of similar or higher sizes of offered cable (including FRLS)—No need to conduct fresh type test from CPRI/ERDA lab. (c) If a bidder has valid type test report from CPRI/ERDA lab for the type, size & rating of similar or higher sizes of offered cable (except FRLS)—Need to conduct only fresh type test of FRLS properties test from CPRI/ERDA/NABL lab(list of tests mentioned in clause 3.9)without any commercial implication to BSES. (d) If a bidder has valid type test report from NABL lab for the type, size & rating of similar or higher sizes of offered cable (including FRLS)—Need to conduct complete type test (including FRLS properties) from CPRI/ERDA lab without any

		commercial implication to BSES. (Type test shall not be more than 5 years old. If the type test report is more than 5 years old (max 10 years), it can be considered subject to no change in their design) (e) UV resistance test to be carried out on one sample from CPRI/ERDA/NABL Accredited Lab as per ASTM standard (sample shall meet minimum 80% retention in tensile strength and elongation after exposure of 21 days as per ASTM standard).
6.5	Acceptance Test (Shall be conducted as per Cl.15.2 of IS 7098 Part-1 & IS 1554 part 1 for each lot of cable)	a) For cable sizes up to 25 mm^2 – one sample for chemical composition and purity test of aluminium shall be conducted per300km of ordered quantity and multiple thereof. b) For cable sizes 50mm^2 – one sample for chemical composition and purity test of aluminium shall be conducted per 100km of ordered quantity and multiple thereof. c) For cable sizes above 50 mm^2 – one sample for chemical composition and purity test of aluminium shall be conducted upto 50km of ordered quantity and multiple thereof. d) Chemical composition and purity test of aluminium shall be conducted from the lot offered to BSES on each size involved in the purchase order. Test shall be carried out at NABL accredited third party lab without any price implication to BSES. e) The sample will be selected either during acceptance test or after receipt of cable in BSES Stores.
6.6	Inspection	a) The buyer reserves the right to witness all tests specified on completed cables b) The buyer reserves the right to inspect cables at the seller's works at any time prior to dispatch either in finished form or during manufacturing, to prove compliance with the specifications. c) In-process and final inspection call intimation shall be given in 10 days advance to purchaser/CES.
6.7	Test Certificates	Complete test certificates (routine & acceptance tests) need to be submitted along with the delivery of cables.

7.0 DOCUMENT SUBMISSION MATRIX

Document/Drawing submission shall be as per the matrix given below:

a. All documents/drawings shall be provided in soft copy only via mail or in returnable Pen drives
b. Language of the documents shall be English only.
c. Document check sheet compliance shall be the first sheet for each submission stage i.e. Technical bid, Drawing Approval, Pre Dispatch, Pre closure

d. No submission is acceptable without check list compliance.
e. Deficient/ improper or incomplete document/ drawing submission shall be liable for rejection.
f. Order of documents shall be strictly as per the check list.
g. Any document not included in the below table but necessary for detailed engineering shall be deemed to be included in bidder's scope

S No.	Detail of Document	Bid	Approval	Pre Dispatch
1	Guaranteed Technical Particulars (GTP)	Required	Required	
2	Deviation Sheet, if any	Required	Required	
3	Detailed cross sectional drawing of cable	Required	Required	
4	Dimensional drawing of cable drum	Required	Required	
4	Type test reports of offered type and rating of cable	Required	Required	
5	BIS certificate	Required		
6	Complete cable catalogue	Required		
7	Make of Raw Materials	Required	Required	
8	Cable de-rating factors	Required	Required	
9	Armour coverage calculation		Required	
10	Inspection test reports and Routine Test Certificates carried out in manufacturer's works			Required
12	Test certificates of all raw materials			Required
13	Calibration test reports of instruments			Required

8.0 PROGRESS REPORTING

8.1	Outline Document	To be submitted for purchaser approval for outline of Production-inspection, testing-inspection, packing, dispatch, documentation programme.
8.2	Detailed Progress Report	To be submitted to purchaser once a month containing a) Progress on material procurement b) Progress on fabrication (As applicable) c) Progress on assembly (As applicable) d) Progress on internal stage inspection e) Reason for any delay in total programme f) Details of test failures if any in manufacturing stages. g) Progress on final box up constraints/forward path.

9.0 DEVIATION

a) Deviations from this specification shall be listed separately by bidder clause wise (format given below) along with optional offer and has to submit the list along with bid/quotation. BSES will review the deviations and if BSES is agreed with the deviation, seller has to take written confirmation from BSES on deviation during tender evaluation.

b) In the absence of any separate list of deviations from the bidders with bid as well as written confirmation from BSES on deviations, it will be assumed by the Buyer that the Seller complies with the Specification fully.

c) Any deviations mentioned in any other submitted bid documents (i.e.in filled GTP, Catalog, BSES old approval, buyer's/seller's standards etc) by seller without separate deviation sheets will not consider as a deviation from this tech spec at any stage of contract.

Deviation sheet format

Sl. No.	Document Name	Clause No.	Deviation	Reason	Merit to BSES

10.0 Annexure -A

GUARANTEED TECHNICAL PARTICULARS (Multi-core)

(Standard Cable sizes are 2cx10, 2cx25, 4cx25, 4cx50, 4C X 95, 4cx150, 4cx300, 4cx400)

For each size /rating separate GTP need to be furnished

Sr. No.	Description	Buyer's Requirement	Seller's data
	Manufacture Contact Person & Number		
	Purchase Req. No.	……..	
	Guarantee Period: (Min)	60 Months (from date of commissioning) / 66 months (from date of receipt at purchaser's store) whichever is earlier	
	Applicable IS / IEC Standard followed by vendor	As mentioned in the clause no – 2.0	
1	Make	…	
2	Type (as required by purchaser)		
A	For 2CX10Sqmm	A2XWY	
B	For Sizes above 10 mm^2	A2XFY	
3	Voltage Grade (kV)	1.1	
4	Maximum Conductor temperature		
A	Continuous	90°C	
B	Short time	250°C	
5	Conductor		
A	Material and Grade	As per Cl.3.1	
B	Make of Al	Ref Annexure D	
C	Size (mm^2)	…… mm^2	
D	Min no. of wires in each conductor (Nos.)	As per Manufacturer Standard	
E	Min Dia. of wires in each conductor before compaction (mm)	As per Manufacturer Standard	

Sr. No.	Description	Buyer's Requirement	Seller's data
F	Shape of Conductor	As per Cl.3.1 (e)	
G	Diameter over conductor (mm)	……	
H	Maximum Conductor resistance at 20 ° C(Ohm/Km)	As per Table 2 of IS 8130	
6	Insulation		
A	Insulation Material	As per Cl. 3.2	
B	Nominal thickness (mm)	As per Table 3 of IS 7098 Part-1	
C	Diameter over Insulation (mm) Approx.	……	
D	Make of insulation compound	Ref: Annexure D	
7	Inner Sheath		
A	Material and Type	As per Cl. 3.4	
B	Minimum thickness	As per Table 5 of IS 7098 Part-1	
C	Approx. dia. Over sheath (mm)	……	
8	Galvanized Steel Armour	as per purchaser's site - specific condition	
A	Material		
a)	For 2CX10 mm^2	G.I. Wire	
(i)	Wire Dia. (mm)	1.4+/-0.040	
(ii)	No. of wires	As per Manufacturer Standard	
b)	For sizes above 10 mm^2	G.I. Strip	
(i)	Strip size (Width and Thickness)	4x0.8 (Zero negative tolerance for thickness)	
(ii)	No. of Strips	As per Manufacturer Standard	
B	Area covered by Armour	Min 90% and calculations shall be strictly as per Annexure-D	
C	Dia. over Armour – Approx.(mm)	……	

Sr. No.	Description	Buyer's Requirement	Seller's data
9	Outer Sheath (FRLS)		
A	Material and Type	As per Cl. 3.6	
B	Minimum Thickness	As per Table 8 of IS 7098 Part-1	
C	Colour	Orange	
D	Embossing Details	As per Cl.3.6 (e)	
10	Approx. overall dia. (mm)	……	
11	Overall order tolerance	- 2 % for the total cable length for the entire order	
12	Cable Drum		
A	Type of Drum	Wooden	
B	Drum Length & tolerance	As per Spec. Cl. 4.3 & 4.4	
C	Marking on Drum	As per Spec. Cl. 4.7	
D	Drums provide with MS Spindle plate & nut bolts arrangement (as per IS:10418)	Required	
13	End Cap	Required	
14	Weights	……	
a)	Net Weight of cable (Kg/Km.) – Approx		
b)	Weight of empty drum	Kg	
c)	Weight of cable with drum	Kg	
15	Continuous current rating for standard I.S condition laid direct		
a)	In ground 30° C	Amps	
b)	In duct 30° C	Amps	
c)	In Air 40° C	Amps	
16	Short circuit current for 1 sec of Conductor (kAmp)	……	
17	Electrical Parameters at Maximum operating temperature:		
A	AC Resistance	Ohm/Km	

Sr. No.	Description	Buyer's Requirement	Seller's data
B	Reactance at 50 C/s	Ohm/Km	
C	Impedance	Ohm/Km	
D	Capacitance	Micro farad / Km	
18	Recommended minimum bending radius	..... x O/D	
19	De-rating factor for following Ambient temperature in	Ground / Air	
a)	At 30° C		
b)	At 35° C		
c)	At 40° C		
d)	At 45° C		
e)	At 50° C		
20	Group factor for following Nos. of cables laid	Touching / Trefoil	
a)	3 Nos.		
b)	4 Nos.		
c)	5 Nos.		
d)	6 Nos.		
21	Process of Cross linking of Polyethylene	Dry/ Sioplas Cure	
22	Type test	Is copy of latest valid TTR for respective Sizes enclosed? Yes /No	
23	FRLS Properties	As per IS 1554, Part-1	
	Oxygen Index	As per IS 1554, Part	
	Temperature Index	As per IS 1554, Part	
	Max Acid Gas Generation	As per IS 1554, Part	
	Light Transmission / Smoke Density	As per IS 1554, Part	

11.0 ANNEXTURE- B

GUARANTEED TECHNICAL PARTICULARS (Single Core)
(Separate GTP needs to be furnished for 25, 95, 300, 500, 630 & 1000 mm^2 cables)

S.No.	Description	Buyer's Requirement	Seller's data
	Manufacture Contact Person & Number		
	Purchase Req. No.	……..	
	Guarantee Period: (Min)	60 Months (from date of commissioning) / 66 months (from date of receipt at purchaser's store) whichever is earlier	
	Applicable IS / IEC Standard followed by Vendor	As mentioned in the clause no-2.0	
1	Make	……	
2	Type	A2XY (Un-armoured)	
3	Voltage Grade (kV)	1.1kV	
4	Maximum Conductor temperature		
A	Continuous	90°C	
B	Short time	250°C	
5	Conductor		
A	Material and Grade	As per Cl. 3.1	
B	Size (mm^2)	.....mm^2	
C	Min no. of wires in each conductor (Nos.)	As per Manufacturer Standard	
D	Min Dia. of wires in each conductor before compaction (mm)	As per Manufacturer Standard	
E	Shape of conductor	Compacted Circular	
F	Diameter over conductor (mm)	……	
G	Maximum Conductor resistance at 20 ° C(Ohm/Km)	As per Table 2 of IS 8130	
H	Make of Al	Ref Annexure D	
6	Insulation	As per Table 3 of IS7098 Part-1	
A	Insulation Material	As per Cl. 3.2	

S.No.	Description	Buyer's Requirement	Seller's data
B	Nominal thickness (mm)		
(i)	For 1Cx300 mm^2	1.8 mm	
(ii)	For 1Cx500 mm^2	2.2 mm	
(iii)	For 1Cx630 mm^2	2.4 mm	
iv)	For 1Cx1000 mm^2	2.8 mm	
C	Diameter over Insulation (mm) Approx.	……	
D	Make of insulation compound	Ref: Annexure D	
7	Inner Sheath	Not applicable	
8	Armour	Not applicable	
9	FRLS Outer Sheath		
A	Material and Type	As per Cl. 3.6	
B	Minimum Thickness	As per Table 8 of IS 7098 Part-1	
C	Colour	Orange	
D	Embossing Details	As per Cl.3.6 (e)	
10	Approx. overall dia. (mm)	……	
11	Overall order tolerance	-2 % for the total cable length for the entire order	
12	Cable Drum		
A	Type of Drum	Wooden	
B	Drum Length & tolerance	As per Spec. Cl. 4.3 & 4.4	
C	Marking on Drum	As per Spec. Cl. 4.7	
D	Drums provide with MS Spindle plate & nut bolts arrangement (as per IS:10418)	Required	
13	End Cap	Required	
14	Weights	……	
a)	Net Weight of cable (Kg/Km.) – Approx		
b)	Weight of empty drum	Kg	

S.No.	Description	Buyer's Requirement	Seller's data
c)	Weight of cable with drum	Kg	
15	Continuous current rating for standard I.S condition laid direct		
a)	In ground 30° C	Amps	
b)	In duct 30° C	Amps	
c)	In Air 40° C	Amps	
16	Short circuit current for 1 sec of Conductor (kAmp)	……	
17	Electrical Parameters at Maximum operating temperature:		
A	AC Resistance	Ohm/Km	
B	Reactance at 50 C/s	Ohm/Km	
C	Impedance	Ohm/Km	
D	Capacitance	Micro farad / Km	
18	Recommended minimum bending radius	……. x O/D	
19	Derating factor for following Ambient temperature in	Ground / Air	
a)	At 30° C		
b)	At 35° C		
c)	At 40° C		
d)	At 45° C		
e)	At 50° C		
20	Group factor for following Nos. of cables laid	Touching / Trefoil	
a)	3 Nos.		
b)	4 Nos.		
c)	5 Nos.		
d)	6 Nos.		
21	Process of Cross linking of Polyethylene	Dry/ Sioplas Cure	
22	Type test	Is copy of latest valid TTR for respective Sizes enclosed?	

S.No.	Description	Buyer's Requirement	Seller's data
		Yes /No	
23	FRLS Properties		
	Oxygen Index	As per IS 1554, Part	
	Temperature Index	As per IS 1554, Part	
	Max Acid Gas Generation	As per IS 1554, Part	
	Light Transmission / Smoke Density	As per IS 1554, Part	

12.0 ANNEXTURE – C

ARMOUR COVERAGE PERCENTAGE

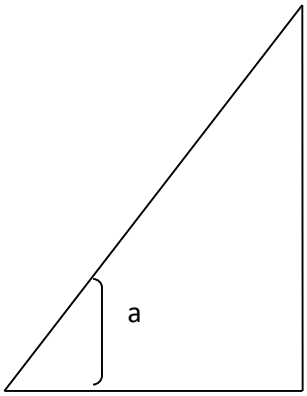

Percent coverage = $\frac{N \times d}{W} \times 100$

Where,
N = number of parallel wires / Strips
d = diameter of wire / width of formed wires
W = π x D x Cos a,
D = diameter under armour
a = angle between armouring wire / formed wires and axis of cable
tan a = π x D/C, and
C = lay length of armouring wires / formed wires.

Min 90% armour coverage shall be provided both in case of wires and strips.

The gap between armour wires / formed wires shall not exceed one armour wire / Formed wire space and there shall be no cross over / over-riding of armour wire / Formed wire so, the minimum area of coverage of armouring shall be 90%.

13.0 ANNEXTURE – D

LIST OF SUB-VENDORS

Sr. No.	Description of Material	Sub-Vendors
1	E.C Grade Aluminium Rod	Bharat Aluminium Co. Ltd. (BALCO) Hindustan Aluminium Co. Ltd. (HINDALCO) National Aluminium Co. Ltd. (NALCO)
2	XLPE Compound	Kkalpana Industries Ltd. KLJ Polymers and Chemicals Ltd. Dow Chemical, U.S.A Borealis, Sweden Hanwha, Seoul, South Korea
3	PVC Compound	Kkalpana Industries Ltd. KLJ Polymers and Chemicals Ltd. Universal SCJ Plastic Sriram Polytech Shri Ram Vinyl, Kota
4	GI Strip	Tata Balaji Systematic Mica Wires Pvt Ltd. Bansal Industries

BSES

TECHNICAL SPECIFICATION

FOR

FRLS CONTROL CABLE

SPECIFICATION NO. – BSES-TS-57-CCAB-R0

Rev:		0
Pages:		11
Date:		20 April 2022
Prepared by	Abhishek Vashistha	
	Rohit Patil	
Reviewed by	Puneet Duggal	
	Amit Tomar	
Approved by	Gaurav Sharma	
	Gopal Nariya	

INDEX

1.0 SCOPE 3

2.0 STANDARDS & CODES 3

3.0 SERVICE CONDITIONS 4

4.0 DESIGN FEATURES 4

5.0 QUALITY ASSURANCE PLAN, INSPECTION AND TESTING 6

6.0 PACKING, SHIPPING, HANDLING & SITE SUPPORT 7

7.0 DEVIATIONS 7

8.0 DOCUMENT SUBMISSION MATRIX 8

Annexure – A: Guaranteed Technical Particulars (Data by Supplier) 9

1.0 SCOPE

The scope of supply includes Design, Manufacture, Testing at manufacturer's works before dispatch, packing, delivery including unloading and stacking at site/store of Control Cable complete with all accessories.

2.0 STANDARDS & CODES

Materials, equipments and methods used in the manufacture of Cable shall conform to the latest edition of following:

S No.	STANDARD	DESCRIPTION
2.1	IS- 1554 Part-1	PVC insulated Cables
2.2	IS- 5831 : 1984	PVC insulation & sheath of electric cables.
2.3	IS- 10810 : 1984	Methods of test for cables.
2.4	IS- 8130 : 1984	Conductors for insulated electric cables and flexible cords.
2.5	IS- 3961 Part 2	Recommended current ratings for PVC insulated and PVC sheathed heavy duty Cables
2.6	IS- 3975 : 1999	Mild steel wires, formed wires and tapes for armouring of cables.
2.7	IS- 10418 : 1982	Drums for Electric Cables
2.8	IEC 60228 Ed.3.0 b	Conductors of insulated cables.
2.9	IEC 60332-3-21 Ed.1.0 b	Tests on electric cables under fire conditions. Part 3-21. Tests on bunched wires or cables.
2.10	IEC 60502-1 Ed. 2.1 b	Power cables with extruded insulation and their accessories for rated voltage from 1kV upto 30kV –Part 1: cables for rated voltages of 1kV and 3kV
2.11	IEC 60811	Common test methods for insulating and sheathing materials of electric cables.
2.12	IEC 60885 Ed.1.0 b	Electric test methods for electric cables.
2.13	IEC 60227	PVC insulated cables of rated voltages up to and including 450/750 V.
2.14	IEC 60028 Ed. 2.0 b	International Standard of Resistance for Copper
2.15	ASTMD 2843	Standard Test Method for density of Smoke from the burning or decomposition of cables
2.16	ASTM 2863	Standard Test Method for measuring of minimum oxygen concentration
2.17	IEC 60754-1	Test on gases evolved during combustion of materials for cables. Part 1 – Determination of the Halogen Acid gas Content

3.0 SERVICE CONDITIONS

Control Cables to be supplied against this specification shall be suitable for satisfactory operation under the following conditions-

3.1	Average grade atmosphere	Heavily polluted, Dry
3.2	Maximum altitude above sea level	1000M
3.3	Relative Humidity	100%
3.4	Ambient air temperature	Highest 50 Deg C Average 40 Deg C Minimum 0 Deg C
3.5	Operating temperature	0 Deg C - 50 Deg C
3.6	Rainfall	750mm concentrated in four months

4.0 DESIGN FEATURES

(Refer Annexure – "A")

S No.	Parameters	Technical Requirements
4.1	Cable construction Features	Size & dimensions of each item mentioned under this clause shall be followed as detailed out in GTP, refer Annexure A
4.2	Conductor	• Stranded, plain copper, circular • Shall be made from high conductivity copper rods
4.3	Insulation	Extruded PVC Insulation Type A as per IS 5831
4.4	Core Identification	As per IS 1554 Part 1
4.5	Inner Sheath	Extruded Inner Sheath of Black PVC type ST-2 as per IS 5831
4.6	Armour	• As per Clause 13.2 of IS 1554 Part-1: Galvanized steel round wire armour. • Minimum area of coverage of armouring shall be not less than 90 %. (refer Annex C of IS 1554-part 1 for % calculation)

S No.	Parameters	Technical Requirements
4.7	Outer Sheath	a) Extruded outer sheath of PVC type ST-2 as per IS 5831 having FRLS properties b) Color : Black c) The Outer Sheath shall be embossed with: i. The voltage designation ii. Type of construction / cable code (for e.g. AYWY) iii. Manufacturers Name or Trade mark iv. Number of Cores and nominal cross sectional area of conductors v. The drum progressive length of cable and individual drum number at every meter. (By Printing) vi. Name of buyer i.e. BSES vii. Month & Year of Manufacturing viii. P.O. No. and P.O. Date
4.8	FRLS Properties	a) Oxygen Index : Not less than 29% as per ASTM 2863 b) Temperature Index: 250°C at Oxygen Index 21 (when tested as per ASTM D 2863) c) Max Acid Gas Generation – Not more than 20% as per IEC -60754-1 d) Light Transmission - Minimum 40% when tested as per ASTMD 2843 (Smoke Density rating shall be max 60%) e) Flammability Test – As per IEC 60332-III, Cat – B, IEC 60332- I, IS- 10810 – Part 53, IS:10810 – Part 61 & 62 (Category A)
4.9	Sealing of cable end	Both ends of the cable shall be sealed with PVC Cap.
4.10	Drum length & tolerance	500 mtr (+/- 5%)
4.11	Overall tolerance in cable length	- 2 %
4.12	Short length of cables	a) Minimum acceptable short length shall be above 100 meters. Manufacturer shall be required to take prior approval from engineering for any short length supply. b) Manufacturer shall not be allowed to put two cable pieces of different short lengths in same cable drum. c) Only 1% of the total ordered quantity.

5.0 QUALITY ASSURANCE PLAN, INSPECTION AND TESTING

S No.	Parameters	Technical Requirements
5.1	Quality Assurance Plan	QAP Shall be submitted by vendor for approval. Inspection and testing of the material shall be carried out accordingly.
5.2	Type test	Cables must be of type tested as per relevant IS/IEC/ASTM. Type test conducted either from CPRI/ERDA/NABL third party accredited lab will be treated as valid. Type test reports shall be submitted for the type, size & rating of cable offered along with bid.
5.3	Routine test	Each drum length of cable shall be subjected to the routine tests as mentioned in IS 1554 part -1
5.4	Acceptance Tests	The sampling & acceptance tests Shall be conducted, as per IS 1554 Part-1 and approved QA plan, for each lot of cable during the inspection of lot at manufacturer's works.
5.5	Inspection	a) The buyer reserves the right to inspect cables at the Seller's works at any time prior dispatch, to verify compliance with the specifications. b) In-process and final inspection call intimation shall be given in 15 days advance to purchaser. c) In the event of any discrepancy in the test reports i.e. test reports not acceptable or any type tests (including special /additional tests, if any) not carried out, same shall be carried out without any cost implication to BSES before dispatch of cable.
5.6	Test certificates	Test certificates (routine and acceptance) shall be submitted along with the dispatch documents.

6.0 PACKING, SHIPPING, HANDLING & SITE SUPPORT

6.1	Packing	The cable shall be wound on wooden drums (with anti termite treatment and M.S. spindle plate with nut-bolts). Cable should be packed conforming to Indian / international standards. The drum shall be fully enclosed by suitable packing preferably PP sheeting.
6.2	Drum identification label	The following information shall be marked on the drum: a) Drum identification number b) Trade name or trade mark; if any c) Name of manufacturer d) Name of buyer i.e. BSES e) Cable voltage grade f) Cable code (e.g. YWY) g) Number of cores and cross sectional area h) Purchase order number with SAP item code i) Year and month of manufacturing j) Direction of rotation of drum (an arrow) k) Net weight of cable in drum and gross weight of cable with drum l) Batch no or Lot no. m) Cable length initial reading & end reading shall be marked on drum. Cable starting end shall be taken out from winding to read this drum reading with proper sealing to protect against external damage.
6.3	Shipping	The seller shall give complete shipping information concerning the gross weight, size of each packing.
6.4	Handling & Storage	Manufacturer instruction shall be followed. Detail handling & storage instruction sheet/manual needs to be furnished before commencement of supply.
6.5	Transit damage	The seller shall be responsible for any transit damage due to improper packing.

7.0 DEVIATIONS

7.1	Deviation	Deviations from this Specification shall be stated in writing with the tender by reference to the Specification clause/GTP/Drawing and a description of the alternative offer. In absence of such a statement, it will be assumed that the bidder complies fully with this specification.

8.0 DOCUMENT SUBMISSION MATRIX

Document/Drawing submission shall be as per the matrix given below. All documents/drawings shall be provided in soft copy only in returnable Pen drives. Language of the documents shall be English only. Incomplete submission shall be liable for rejection.

S No.	Description	Bid	Approval	Pre Dispatch
8.1	Guaranteed Technical Particulars (GTP)	required	required	
8.2	Deviation Sheet, if any	required	required	
8.3	Detailed cross sectional drawing of cable	required	required	
8.4	Dimensional drawing of Cable Drum		required	
8.5	Type test reports for the offered type and rating of cable	required	required	
8.6	BIS Certificate	required		
8.7	Make of Raw Materials	required	required	
8.8	Cable de-rating factors	required	required	
8.9	Manufacturer's Quality Assurance Plan		required	
8.10	Detailed installation & commissioning instructions		required	
8.11	Test certificates of all raw materials			required
8.12	Inspection and routine test reports, carried out in manufacturer's works			required

Annexure – A: Guaranteed Technical Particulars (Data by Supplier)

(Standard Cable sizes are 2Cx2.5, 4Cx2.5, 6C X 2.5, 8Cx2.5, 10Cx2.5, 12C X 2.5 mm^2)

For each size separate GTP need to be furnished

***For any size other than standard sizes mentioned, GTP should be as per IS or requirement whichever applicable**

Sr.	Description	Buyer's requirement	Vendor's Data
	Purchase Req. No.	….	
	Guarantee Period: 5 Years	60/66 Months	
1.0	Make	To be specified by vendor	
2.0	Type (AS PER IS 1554 part -1)	YWY	
3.0	Voltage Grade (KV)	1.1	
4.0	Maximum Conductor temperature		
a)	Continuous (° C)	70°C	
b)	Short time (° C)	160°C	
5.0	Conductor		
a)	Size (mm^2)	2.5	
b)	No. of wires in each conductor	As per Manufacturer standard	
c)	Dia. of wires in each conductor before compaction (mm)	As per Manufacturer standard	
d)	Shape of Conductor	As per Clause 4.2 of specification	
e)	Diameter over conductor mm	To be specified by vendor	
f)	Maximum Conductor resistance at 20 ° C (Ohm/Km)	As per Table 2 of IS 8130	
6.0	Insulation	As per Table 1 of IS:5831 – 1984	
a)	Nominal thickness (mm)	As per Clause 4.3 of specification & Table 2 of IS 1554(Part-1)	
b)	Minimum thickness (mm)		
c)	Core Identification	As per IS 1554 Part 1	
d)	Approx. dia. over Insulation (mm)	To be specified by	

Sr.	Description	Buyer's requirement	Vendor's Data
		vendor	
7.0	Inner Sheath	As per Table 2 of IS:5831 – 1984	
a)	Minimum thickness (mm)	As per Table 4 of IS 1554(Part-1)	
b)	Approx. dia. Over sheath (mm)	To be specified by vendor	
8.0	Galvanized Steel Armour	As per IS 1554-part 1	
a)	Number of armour wire	As per Manufacturer Std.	
b)	Nominal dia. of Round Wire	As per Table 5 of IS 1554(Part-1)	
c)	Dia. over armour – approx.	To be specified by vendor	
d)	Lay Ratio	To be specified by vendor	
e)	Confirm minimum 90% coverage (submit calculation)		
9.0	Outer Sheath (FRLS)	As per Table 2 of IS:5831 – 1984	
a)	Thickness (min)	As per Table 7 of IS 1554(Part-1)	
b)	Color	Black	
10.0	Approx. overall dia. (mm)	To be specified by vendor	
11.0	Drum length & tolerance	As per clause 4.10 of specification	
12.0	End Cap	Required	
13.0	Drums provide with MS Spindle plate & Nut bolts arrangement	Required	
14.0	Net Weight of cable (Kg/Km.) – approx.	To be specified by vendor	

Sr.	Description	Buyer's requirement	Vendor's Data
15.0	Continuous current rating for standard I.S. condition laid Direct		
a)	In ground 30° C Amps	To be specified by vendor	
b)	In duct 30° C Amps	To be specified by vendor	
c)	In Air 40° C Amps	To be specified by vendor	
16.0	Short circuit current for 1 sec of conductor. (KAmp)	To be specified by vendor	
17.0	Electrical Parameters at Maximum Operating temperature:		
a)	Resistance (Ohm/Km) (AC Resistance)	To be specified by vendor	
b)	Reactance at 50 C/s (Ohm/Km)	To be specified by vendor	
c)	Impedance (Ohm/Km)	To be specified by vendor	
d)	Capacitance (Micro farad / KM)	To be specified by vendor	
18.0	Recommended minimum bending radius	…. x O/D	
19.0	FRLS Properties		
a)	Oxygen Index	To be specified by vendor	
b)	Temperature Index	To be specified by vendor	
c)	Max Acid Gas Generation	To be specified by vendor	
d)	Light Transmission / Smoke Density	To be specified by vendor	

BSES Rajdhani Power Limited
BSES Bhawan, Nehru Place, New Delhi- 19

TECHNICAL SPECIFICATION

FOR

EXHAUST & VENTILATION SYSTEM INCLUDING AIRCONDITIONING

Prepared by					**Rev: 0**
Reviewed by					**Date:**
Approved by					

Technical Specification Exhaust and Ventilation System

1.0 INTENT OF SPECIFICATION

1.1 This specification is intended to cover the design, manufacture, assembly, testing at manufacturer's works, supply & delivery, properly packed for transport for site of Air Conditioning system and Ventilation system for substation control room building complete with all materials and accessories for efficient and trouble free operation

1.2 In the event of any discrepancy with the listed documents, the stipulation this specification shall govern.

2.0 SCOPE OF SUPPLY

The following equipment shall be furnished with all accessories.

a) Exhaust Fan system.
b) Air Conditioning
c) All necessary components for operation of the above equipment.
d) All wiring & accessories to complete the installation.
e) All relevant drawings, data & instruction manuals.
f) Mandatory spares.
g) Commissioning spares and recommended spare part list for three (3)

3.0 GENERAL REQUIREMENT

3.1 All equipment and material shall be designed, manufactured and tested in accordance with the latest applicable Indian Standards except where modified and/or supplemented by this specification.

3.2 Equipment and materials conforming to any other standard, which ensures equal or greater quality, may be accepted. In such case copies of the English version of the standard adopted shall be submitted along with the bid.

3.3 In particular, the following standards and specifications are applicable.

3.4 Air conditioners suitable for 230V, 50 Hz single phase AC supply shall be capable of performing the functions as cooling, dehumidifying, air circulating and filtering. The air conditioners shall be complete with automatic temperature control and cut-in and cutout etc. for temperature range 16 to 25 degree C.

3.5 Outdoor unit of the air conditioners shall be fitted discharge cooled type rotary Compressor.

3.6 Air Conditioner shall be 5 Star rated

Technical Specification Exhaust and Ventilation System

3.7 Air Conditioning shall maintain 22 Degree Celsius in summers and Winters, Environment condition shall be referred from General Design Criteria Chapter 1

3.8 Approved make of AC is Voltas/LG/Carrier.

3.9 The minimum thickness of the base in outdoor unit shall be 1.20 mm & sheet thickness for rest of the body shall be 0.70 mm (Min.) with galvanized coating thickness of 120 g/ sq. m and shall be provided with stiffeners for robust construction and shall have rounded corners.

3.10 The casing of the indoor units shall be made of ABS/HIPS/GS and shall be impact resistant. The control box of indoor unit shall withstand flame retardant.

3.11 Remote cordless control with LCD/LED Display for Air conditioner shall be provided with one On/Off timer, selecting fan speed (three speed) and setting up of temperature. Display shall be provided on indoor unit or on handset or on both.

3.12 Maximum power consumption of the split air conditioners shall be measured at capacity rating test conditions. Overall power factor of the unit shall be at least 0.85 at capacity rating test conditions

This specification shall be read and constructed in conjunction with the bid documents and annexure to determine the scope of work.

DESIGN CRITERIA

	Air Conditioning shall be supplied in Control Room and Switchgear Room including GIS Room, maintenance room and SCADA room. Exhaust system shall be supplied in following rooms -Toilet – one Pantry- One Cable Celler- Industrial type numbers shall be as per calculation
Number and details of wall mounted/Ceiling fan	Battery room – 1 No Control room – 3 No's Switchgear Room – 6 No's GIS Room-As per Calculation, 6 Nos(Minimum). **Note: Wall mounted fan shall be industrial type, domestic fans shall not be acceptable**
Power Point & socket	Each room shall be provided with at least 2 No's 15 Ampere Switch socket and 2 no's 5 ampere switch sockets. Two no's industrial 16 ampere points shall be provided in control room for installation of air conditioning system for future.

	All equipment, accessories and wiring shall have fungus protection, involving special treatment of insulation and metal against fungus, insects and corrosion.

4.0 DEVIATIONS

Deviation from this specification, if any, shall be clearly brought out in the offer. Unless owner explicitly accepts such deviations, it shall be considered that the offer fully complies with the specification.

BSES Rajdhani Power Limited
BSES Bhawan, Nehru Place, New Delhi- 19

TECHNICAL SPECIFICATION

FOR

FIRE EXTINGUISHER

Prepared by					**Rev: 1**
Reviewed by					**Date: 24.05.21**
Approved by					

Technical Specification Fire Extinguisher

1.0 INTENT OF SPECIFICATION:

This specification is intended to cover the design, manufacture, assembly, testing at manufacturer's works, supply & delivery, properly packed for transport FOR site of Portable wall and trolley mounted Fire extinguisher and fire buckets for substation control room building complete with all materials and accessories for efficient and trouble free operation.

In the even of any discrepancy with the listed documents, the stipulation of this specification shall govern.

2.0 SCOPE OF WORK

2.1 Scope of Supply

The following equipment shall be furnished with all accessories:-

a) Wall mounted fire extinguisher-15 Nos. of 4.5kG (CO_2 Type)
b) Trolley mounted fire extinguisher- 5 Nos. of 22.5kg (CO_2 Type)
c) Sand buckets with stand- 4 Set with 4 bucket in each stand
d) All installation hardware.
e) All relevant drawings, data & instruction manuals.
f) Mandatory spares.
g) Commissioning spares and recommended spare part list for three (3) years of operation.
h) Rubber Mat for entire Indoor equipments front and backside(as per latest IS)

3.0 GENERAL REQUIREMENT

3.1 Codes and Standard

All equipment and material shall be designed, manufactured and tested in accordance with the latest applicable Indian Standards except where modified and/or supplemented by this specification.

Equipment and materials conforming to any other standard which ensures equal or greater quality may be accepted. In such case copies of the English version of the standard adopted shall be submitted along with the bid.

In particular, the following standards and specifications are applicable.

Indian Electricity Rules	Relevant safety regulation of CEA
Indian electricity act	
IS 2190	Selection, installation & maintenance of first aid, fire extinguisher.
	Tariff Advisory Committee Manual
IS 1646	Code for practice for fire safety of buildings
IS 940	Portable fire extinguisher, Water type - specification
IS 2878	Fire extinguisher CO2 type
IS 2171	Specification for fire extinguisher dry powder.
IS 10204	Specification for fire extinguisher Mechanical foam type.

This specification shall be read and constructed in conjunction with the bid documents and annexure to determine the scope of work.

4.0 DESIGN CRITERIA

General	The contractor shall supply the required type and quantities of fire extinguisher and Sand buckets. The quantity shall be as per TAC recommendations.
Location	Fire extinguisher and sand buckets shall be installed in Control room, battery room, switchgear room, ACDB & battery charger room, Cable cellar, Transformer yard, Outdoor switchyard and Capacitor bank.
Distribution	The fire extinguishers in various locations shall be as per the guidelines of TAC-India.
Tests	All equipment shall be completely assembled wired, adjusted and routine tested at the factory as per relevant standards.

5.0 DEVIATIONS

Deviation from this specification, if any, shall be clearly brought out in the offer. Unless owner explicitly accepts such deviations, it shall be considered that the offer fully complies with the specification.

TECHNICAL SPECIFICATION

FOR

FIRE SUPPRESSION SYSTEM

Specification No- GN101-03-SP-139-00

Prepared by	**Javed Ahmed**		**Rev: 1**
Checked by	**Javed Ahmed**		
Reviewed by	**Abhinav Srivastava**		
Approved by	**Sheshadri Krishnapura**		**Date: 21 May 2021**

Index

1.0 Scope
2.0 Code and Standards
3.0 Service Conditions
4.0 General Requirement
5.0 System Design
6.0 Installation, Testing and Commissioning
7.0 Maintenance
8.0 Drawing and Data submission
9.0 Shipping
10.0 Handling and Storage
11.0 Quality
12.0 Deviation
13.0 Testing and Inspection
14.0 Training

1.0. SCOPE:

Switchgear Panel Fire Suppression System: This includes Supply, Installation, Testing and Commissioning of Suppression system.

2.0. CODE AND STANDARDS:

This specification shall be governed by following standards/rules & regulations with all amendments unless otherwise specified in this specification.

S.No.	Standard Name / No	Standard's Description
1	AS 1670.1, AS1603.8, ASNZS 3000	Latest Edition
2	Indian electricity act 2013	Latest Edition
3	Fire Industry Association (FIA), Code of Practice for Design, Installation, Commissioning and Maintenance of Aspirating Smoke Detector (ASD) Systems	Latest Edition
4	NFPA Standards	2001 (2015 Edition)
5	NEC Standards, US	Latest Edition
6	NZS 4512	2003
7	Residential Fire and Burglary:– Household Fire Warning System Units – ANSI/UL 985, 2000/05/26 (5th edition) with revisions up to2004/04/29	Latest Edition
8	IS-875	Latest Edition
9	Local Fire Authority	Delhi
10	National Building Code	Part 4 Fire and life safety 2016

3.0. SERVICE CONDITIONS:

S.No	Particulars	Data
1	Design Ambient temperature	0°C to 50 °C
2	Seismic Condition	Zone IV as per IS 1893
3	Wind Pressure	195 kg/M² upto elevation of 30 M as per IS 875
4	Maximum Relative Humidity	100%
5	Maximum Altitude above Sea level	1000M

6	Rainfall	750mm (concentrated in 4 months)
7	Pollution level	Heavy/Dry
8	Average of no thunderstorm days	40 per annum

4.0. Scope of Work:

a. Supply, Installation, Testing and Commissioning of clean Agent Novec 1230/equivalent Fire Suppression system designed to provide a uniform concentration within the electrical panels in accordance with NFPA 2001 and requirements of the contract documents.

b. Provide all engineering design and materials for a complete agent suppression system including Novec 1230/equivalent storage cylinders with steel bracket, extinguishing agent, detection tube, cylinder valve and associated accessories including but not limit to; adaptors, pressure switch, Fire Detection tube fittings etc, required for complete operation of system.

c. All necessary safety requirements such as warning signs, discharge alarm shall be part of system.

d. The necessary nomenclature such as pressurization level, agent volume, and gross/net weight of cylinder shall be clearly marked on cylinder.

e. Prior to supply of material at site. Contractor must submit following documents for approval of Engineer-in-charge.

f. Drawing in A-4 size, clearly showing the panel, routing of tube inside the panel, location and fixing arrangement of cylinder & system components.

5.0 System Description:

a) The detection tube shall be fixed with cylinder valve at top of cylinder. The tube shall be pressurized with dry nitrogen at 16 bars. In case of fire and on reaching of pre-determined temperature, the tube shall rupture and gas shall be released from tube/ discharge nozzle over the protected area.

b) The pressure switch shall be provided for necessary indication of discharge of gas.

c) The Extinguishing Agent shall be stored in cylinder as liquefied compressed gas, super pressurized with dry nitrogen at 195 psi minimum

d) The cylinder shall be equipped with brass valve, pressure gauge (to monitor agent pressure) and isolation valve for maintenance purposes. The cylinder bracket shall be of steel construction with quick release clamp.

e) The detection tube shall be installed throughout the compartments of panel. The location and spacing of tube shall be above the hazard, to be protected.

f) In case of ILP System Nozzles shall be placed properly over the protected area.

g) With system activation, a signal should be generated via Audio Visual Alarm installed at convenient location as per Engineer-in-Charge.

6.0 **System Components:**

The bidder shall provide an under taking from Principle Manufacturer of product they intent to install, that manufacturer will fully support the bidder for this specific project.

a) Cylinder of steel construction with standard red epoxy paint finish. Cylinders shall be accompanied by original manufacturers test certificate confirming the contents of the cylinder.

b) The cylinders shall be from reputed Manufacturers only. Cylinders shall be super pressurized with dry nitrogen to an operating pressure and temperature as per manufacturer recommendations.

c) Each cylinder shall have pressure gauge and low pressure switch to provide visual and electrical supervision of the cylinder pressure. The low pressure switch shall be wired to the Audio Visual Alarm to provide audible and visual trouble alarm in the event of drop of pressure. The pressure gauge shall be color coded to provide an easy, visual indication of cylinder pressure.

d) Furnish a welded steel bracket with each cylinder assembly for holding the cylinders in a saddle with a front bracket piece that secures the cylinders.

e) The Detection Tube, should be UL approved, UL approval marking, Red Color.

f) The Pressure Switch should be UL Listed/CE Marked having NO/NC contact.

g) DLP/ILP Valves should be CE/ISO/EN approved and π marked.

h) All the Power and Control Cables shall be FRLS type.

i) System shall give signals to SCADA on through communication port.

MANDATORY APPROVALS/CERTIFICATES SHALL BE REQUIRED

1. Authorization letter from Principal OEM of System
2. Authorization Letter from OEM of Clean Agent(UL/FM).
3. Pneumatic Heat Sensing Tube- UL Listed and marked
4. Valve shall be π marked
5. Pressure Switch Assembly: UL/CE approved
6. UL Approved filling station.

7.0. MAINTENANCE

Bidder shall furnish a maintenance manual and support maintenance activity.

8.0. DRAWING AND DATA SUBMISSION

8.1	Submissions along with the bid	
8.1.1	Duly filled GTP and copy of specification	2 copies + 1 soft copy

9.0. SHIPPING

9.1	Shipping	The bidder shall ascertain at an early date and definitely before the commencement of

		manufacture, any transport limitations such as weights, dimensions, road culverts, Overhead lines, free access etc. from the Manufacturing plant to the project site. Bidder shall furnish the confirmation that the proposed Packages can be safely transported, as normal or oversize packages, up to the site. Any modifications required in the infrastructure and cost thereof in this connection shall be brought to the notice of the Purchaser.
		The Bidder shall be responsible for all transit damage due to improper packing.

10.0. HANDLING AND STORAGE

10.0	Handling and Storage	Manufacturer instruction shall be followed. Detail handling & storage instruction sheet / manual needs to be furnished before commencement of supply.

11.0. QUALITY & INSPECTION

11.1	Vendor quality plan	To be submitted for purchaser approval
11.2	Testing & Inspection	As per relevant standards

12.0 Warranty

Warranty shall be 5 Years Minimum. Vendor shall provide free maintenance during warranty period.

Following activities shall be included during period of warranty.

1. one visit by service engineer for general check up -- once in a six month time on each location.
2. Functionality test of the entire system -- once in one year time on each Location.

3. Mandatory Spares shall be provided for upkeeping of system for the period of 5 Years.

13.0 DEVIATION

13.1	Deviation	Deviations from this Specification shall be stated in writing with the tender by reference to the Specification clause/GTP/Drawing and a description of the alternative offer. In absence of such a statement, it will be assumed that the bidder complies fully with this specification. No deviation will be acceptable post order.

14.0 TRAINING

Training on installation, commissioning, operation and maintenance shall be included in the quotation.

- At site after installation- 1 Manday

TECHNICAL SPECIFICATION

FOR

VIDEO SURVEILLANCE SYSTEM

Prepared by	**Javed Ahmed**		**Rev: 2**
Reviewed by	**Abhinav Srivastava**		
Approved by	**Gopal Nariya**		**Date: 25th July 2024**

1. SCOPE:

Design, Engineering, procurement of bought out items, manufacture, integration, inspection, factory testing and supply of complete CCTV System for the entire plant as per requisition consisting of following including necessary hardware, software and accessories as applicable.

2. STANDARDS:

In accordance with Latest Relevant IS/IEC.

3. SCOPE OF SUPPLY:

- CCTV cameras suitable for remote operation with all necessary accessories and installation hardware consisting of, but not limited to the following:

1. High speed zoom lens.
2. IP Based
3. 5 MP minimum
4. Motion detection with basic analytics support.
5. IP based
6. 360 Degree Cameras
7. Automatic Iris
8. Pan & tilt unit
9. Receiver unit
10. Weatherproof junction box
11. Weatherproof housing for unit camera.
12. Glass Dome with reflector shield on outside.
13. Night Vision.
14. One set of 360 camera shall be installed before start of work

- System cabinet consisting of following:-

1. Video encoder, network switches, etc.
2. Central control unit with all control functions like pan, tilt, focus and consisting of switching unit.
3. Video Motion Detection system
4. Video recorder to record video images

- 2 Nos -17'' FULL HD, LED Monitor with HDMI interface to CPU with Keyboard, Optical Mouse for monitoring at Main Control Room & Security Security Room.

- Monitoring unit also including Programming unit consisting of programming Monitor LED 17", keyboard and optical mouse, independent of monitoring unit with all required hardware and software for CCTV functioning.

- All furniture required in the Control room and Security Gate, to mount the CCTV equipment like TV, PC, keyboard , NVR, etc.

- 8/16/32 port PoE ehernet switch – 2 Nos

- KVMS Pro Monitorig tool with licence (PCNVR)

- NVR with 32 channel supported 5MP camera ,6TB/8TB SATA

- All types of Cables (Video, Control/data, Optic Fiber and Power Supply etc.), cable glands, plugs, connectors and accessories, for interconnection of all the equipments supplied by vendor.
- Junction boxes, Power distribution boxes, repeaters, cable glands, etc. as necessary.
- Mounting poles for mounting the camera along with a climbing ladder.
- The Ladder to be provided with wheels & brakes for easy movement on roads.
- 6U RACK Network rack with 6 socket power strip with FAN and cable manager
- HDPE pipe with required pipe fittings for laying optical fiber cables between CCTV Cameras and main control room, and between main control room and security control room (gate / security house).
- Cable trays for CCTV cables within control rooms with required accessories in case required at site. Cable trays outside control room (where main cable duct is not available). Buried cable trench for cabling along the boundary walls.
- All necessary supports for installation of all items supplied by vendor.
- All mounting accessories required to mount various items supplied by vendor.
- Earthing material required for earthing of CCTV equipment installed by Vendor.
- Necessary base frame support for mounting CCTV cabinets in main control room.
- Any other item necessary but not specifically listed for successful operation of CCTV system.
- Packing, forwarding, transportation and storage at site of complete CCTV system and accessories.
- Supply of special instrument or tools needed for testing, calibration and maintenance of offered CCTV system.
- Supply of consumables and commissioning spares as per requisition for CCTV system.
- Any other item or/and activity not listed/indicated specifically but necessary for successful operation of CCTV system.
- CCTV monitoring of the site & image capture in case of an intrusion
- Future hardware expansion facility.
- The CCTV system shall be support high resolution viewing & recording.
- The images shall be transferred to a central location or on Mobile using Internet connectivity.
- The System shall be CE & FCC certified
- Complete system shall be from the same manufacturer.

- System should be design to work on low bandwidth WAN with following considerations:

1) Camera stream : H.265
2) Camera resolution : 4CIF (704x480)
3) Video quality : Medium
4) Number of cameras : 01
5) Frame rate per camera at site :25FPS
6) Frame rate per camera at Centre :15FPS
7) Recording type : Continuous 24 Hours per day
8) Desired days of storage per camera : 30 Days
9) hDD support on Raid1,30 days backup availability

All cameras should support dual stream and configured in such a way that one stream should provide feed to central control centre and other stream should be capable to support edge recording (memory card on camera or NVR). System should be intelligent to monitor WAN and whenever there is outage or central control centre not reachable camera should start recording on memory card or NVR present on camera and capable to restore the data to the central system in the missing area.

4. SCOPE OF SERVICE :

- Installation, integration of complete CCTV system and associated accessories including calibration, cabling, junction boxes, power supply, distribution boxes, etc.
- Installation of CCTV Cameras. The Cameras to be mounted on top of Pole, so as no blind spot is created due to pole.
- Installation of CCTV monitors for monitors located in main control room and monitors located in security control room (gate / security house).
- Installation of monitor located in MCR and security control room.
- Installation of mounting poles wherever applicable.
- Installation of CCTV cabinets for various units.
- Installation of programming unit PC.
- Installation of various junction boxes (signal, power, control) supplied by vendor.
- Laying of co-axial / optical fiber cable between CCTV Camera & Control Console Cabinets.
- Laying of power cable between CCTV Cameras and CCTV Cabinet in MCR.
- Laying of CCTV Cables (video, control, data, power).
- Laying of CCTV fiber optic Cables between MCR and security control room.
- Termination, ferruling and glanding at both ends and interconnection of various cables (video, optical, control, power) supplied by vendor for complete CCTV system.
- Distribution of power supply and reduction to required levels to various CCTV equipment supplied by vendor.

- Integration of CCTV Camera with BRPL Network

The entire IP surveillance system to be designed to control and monitor the locations provided based on following considerations:

- Camera to be of 4 MP (all to be integrated in the VMS present and future)
- CCTV system should be design to work on WAN with at lower bandwidth as low as (256Kbps per camera). Objects or persons should be identified under low bandwidth Scenario
- Bandwidth should be configurable
- System should be design to work and record on 15fps and 1 MP centrally
- System should be design with event based and continuous recording as and when required

Four types of cameras shall be considered to monitor the movement of the people as follows:

1) Indoor
2) Outdoor
3) PTZ
4) 360 degrees outdoor

- All cameras shall be True Day/Night function IP camera
- Analytics to be in built at camera side like – Face capture, Trip Wire, Counter, Object removal, Motion detection.
- All accessories with the outdoor cameras like JBs, power supply, media converter etc. should be in water poof and dust proof housing
- All cabling including LAN network will be in scope of vendor in case of open through ISI mark PVC / GI pipes or concealed through ISI mark PVC / HDPE pipe
- L2 POE Cisco switches should be used to power-up the camera in case of 4 or more at a location else power adapter to be used to power up the cameras
- Servers should be either HP / IBM
- Servers should be planned in redundancy

5. TESTS.

All equipment with their terminal connectors, and other hardware etc., shall conform to type tests and shall be subjected to routine and acceptance tests in accordance with Latest Relevant IS .

6. COMPLETENESS OF EQUIPMENT:

Any fittings, accessories or apparatus which may not have been specifically mentioned in this specification but which are usually necessary for the satisfactory operation of the equipment, shall be deemed to have been included in this specification.

7. PACKINGS:

All material shall be suitably packed for transport, direct to site and Manufacturer shall be responsible for all damages/losses due to improper packing. All boxes shall be marked with signs indicating the up and down sides of the boxes along with the unpacking instructions, if considered necessary by the Manufacturers.

Note: All critical areas/rooms to be covered fully leaving no grey area. Placement of cameras shall be such that there should be no shadow portion.

BSES Rajdhani Power Limited
BSES Bhawan, Nehru Place, New Delhi- 19

TECHNICAL SPECIFICATION

FOR

FIRE DETECTION AND ALARM SYSTEM

Prepared by					**Rev: 0**
Reviewed by					**Date:**
Approved by					

Technical Specification Fire Detection and Alarm System

1.0 INTENT OF SPECIFICATION:

This specification is intended to cover the design, manufacture, assembly, testing at manufacturer's works, supply & delivery, properly packed for transport FOR site of Fire and smoke Detection & Alarm System for substation control room building complete with all materials and accessories for efficient and trouble free operation.

In the even of any discrepancy with the listed documents, the stipulation of this specification shall govern.

2.0 SCOPE OF WORK

2.1 Scope of Supply

The following equipment shall be furnished with all accessories :-

a) Smoke and heat detectors and installation.
b) Manual call point for the substation building.
c) Fire detection alarm panels which shall be SCADA compatible along with its integration with SCADA.
d) All wiring & accessories to complete the installation.
e) All installation hardware.
f) All relevant drawings, data & instruction manuals.

3.0 GENERAL REQUIREMENT

3.1 Codes and Standard

All equipment and material shall be designed, manufactured and tested in accordance with the latest applicable Indian Standards except where modified and/or supplemented by this specification.

Equipment and materials conforming to any other standard which ensures equal or greater quality may be accepted. In such case copies of the English version of the standard adopted shall be submitted along with the bid.

In particular, the following standards and specifications are applicable.

Indian Electricity Rules	Relevant safety regulation of CEA
Indian electricity act	
CBIP manual	
IS 2189	Code of practice for selection, installation & maintenance of automatic fire alarm system.
IS 2190	Selection, installation & maintenance of first aid, fire extinguisher.
IS 1646	Tariff Advisory Committee Manual
	Code for practice for fire safety of buildings

Technical Specification Fire Detection and Alarm System

This specification shall be read and constructed in conjunction with the bid documents and annexure to determine the scope of work.

4.0 DESIGN CRITERIA

General	1. The fire detection system shall consist of various types of fire detectors, control cabling, fire alarm panels, central monitoring station, annunciation/control panels, local panels. 2. The fire detection and alarm system shall be microprocessor based, analogue addressable system. 3. A central monitoring system shall be provided in the control room covering complete substation. 4. The control system shall be compatible to be interfaced with SCADA system through separate communication port.
Location	Fire detectors shall be provided for the entire substation building including control room, switchgear room, battery charger, corridors, Cable Celler etc.Fire detectors shall be located at strategic location in various rooms of the building.
Operation	The operation of any of the fire detectors / manual call point should result in the following : a) A visual signal exhibited in the alarm panel indicating the area where the fire is detected. b) An audible alarm (Hooter) sounded in the panel. c) An external alarm sounded in the building, location of which shall be decided during detailed engineering. d) An alarm should be signaled to the control room.
Detection & Alarm system	1. Each zone shall be provided with two zone cards in the panel so that system will remain healthy even if one the cards become defective which shall be indicated at SCADA . 2. The control panel shall be suitable for 230V AC and 220V DC as power supply.
Cabling	The detector cable and the other control cable shall be armoured, screened and twisted FRLS type in external areas and shall be of unarmoured FRLS type inside building (in conduits)
Tests	All equipment shall be completely assembled wired, adjusted and routine tested at the factory as per relevant standards.
	Following tests shall be performed on the system a) Response characteristics of fire detectors. b) Performance test on fire extinguisher as required in the code. c) A comprehensive visual and functional check for the fire alarm panel. d) Verification of wiring as per approved schematic. e) Testing of fire detection panel as per BS3116 Part IV.
Site Test	All the detectors installed shall be tested for actuation by bringing a suitable smoke source near the detector creating a stream smoke over the detector. After each test smoky atmosphere should be cleared so that the detector shall reset.

	Certify proper operation of all detectors and call points.
	One of each type of extinguisher shall be tested for its performance.

5.0 DEVIATIONS

Deviation from this specification, if any, shall be clearly brought out in the offer. Unless owner explicitly accepts such deviations, it shall be considered that the offer fully complies with the specification.

BSES Rajdhani Power Limited
BSES Bhawan, Nehru Place, New Delhi- 19

TECHNICAL SPECIFICATION

FOR

CABLE INSTALLATION & ACCESSORIES

Prepared by	**Javed Ahmed**		**Rev: 1**
Reviewed by	**Abhinav Srivastava**		**Date: 12th June 2018**
Approved by	**K.Sheshadri**		

Technical Specification for Cable Installation and Accessories

1.0 INSTALLATION OF CABLES:

1.1 The cable shall be laid as per IS 1255. The Contractor shall prepare cable schedules for all the cable circuits associated with the equipment in the substation showing length, size and routing of each cable which shall be given suitable code numbers and submit the same for Owner's/Engineer's information/approval. Cable and Conduit laying shall be done strictly in accordance with the cable schedules.

1.2 The control and power cables shall be laid in conduits, concrete pipes, ducts, trays or cable trenches unless indicated otherwise. The power and control cables shall be laid in different trays. Cables shall be cleated to the cable tray after properly dressing.

1.3 Ducts shall be provided wherever cable trenches cross roads with provision of one spare duct for future use.

1.4 All civil works, viz, excavations, sand cover, providing brick cover on directly laid cables, construction of foundations, trenches with cable tray supports, cable ducts under roads, back filling, finishing associated with cabling work shall be duly completed.

1.5 The Contractor shall supply and install all the surface mounted/ embedded rigid and flexible conduits, their connections, and associated clamps, bushings, lock-nuts, caps etc required in the cabling work.

1.6 All conduits and their accessories shall be made of galvanized heavy gauge steel as per BIS Specification. The internal bore of all pipes shall be smooth and suitable for pulling PVC sheathed cables without damage.

1.7 The Contractor shall supply all fittings including ordinary tees and elbows, check nuts, male and female fittings pull boxes, junction boxes, conduit outlets, outlet boxes, splice boxes, terminal boxes, gaskets and box covers, saddles and all supporting steel work and all such arrangements which are required to complete the conduit installations.

1.8 Pre-fabricated junction boxes, conduit boxes and conduits shall be shop fabricated out of malleable iron or steel plates and shall be galvanized and provided with galvanized malleable iron or steel plate covers and rubber gaskets

1.9 All the apparatus, connections and cable work shall be designed and arranged to eliminate the risk of fire and minimize damage which might be caused in the event of fire. Wherever cables pass through floor or wall openings or other partitions, suitable bushes of approved type shall be supplied and put in position by the Contractor.

1.10 Standard cable grips, reels and rollers shall be utilized for cable pulling.

1.11 Each cable, whether power or control, shall be provided with a metallic or plastic tag of an approved type, bearing cable reference number indicated in the cable schedule prepared by the Contractor, at every 10 meter run and at both ends of the cable, adjacent to the

terminations as well as where cables enter or leave ducts. Cable routing shall be so done that cables are accessible for identification and maintenance easily, and are arranged neatly.

1.12 In no case the cables shall be bent sharply or kinked with the radius of bending falling below 15D where D is the overall diameter of the cable.

1.13 When power cables are laid in the proximity of communication cables, the minimum horizontal and vertical separation between power and communication cables shall be 600 mm. Wherever possible the power and communication cables shall be located as far from each other as possible. The power and communication cables shall cross each other at right angles.

1.14 Wherever cables cross roads, water, oil, sewage or steam-lines, special care shall be taken while designing the trenches/ducts for protection of the cables.

1.15 In each cable run, some extra length shall be provided at a suitable location to enable making of one or two straight-through joints for carrying out repairs if the cable develops fault at a later date.

1.16 Cable splices shall not be permitted except where called for as per the construction drawings, or where permitted by the Engineer. Straight-through joints in the run of cables wherever unavoidable shall be through joint-boxes.

1.17 The termination of cables at various equipments shall be carefully made in accordance with the manufacturer's instructions and detailed connection diagrams.

Termination materials for all cables shall match with the type of cable insulation and have thermal and electrical ratings and chemical properties similar to those of the associated cable.
All terminating materials except for those already supplied with the electrical equipment shall be provided by the Contractor.

1.18 Control cable terminations shall be made in accordance with the color code marked wiring diagrams of control circuits. Multi-conductor control cable jackets shall be removed as required to train and terminate the conductors. The cable jacket shall be left on the cable, to the extent possible. The insulated conductors from which the jacket is removed shall be neatly trained in bundles and terminated. The bundles shall be firmly, but not tightly, tied utilizing plastic or nylon ties or specially treated fungus-proof cord.

1.19 The connectors for control cables shall preferably terminate in Ross Courteny terminals and washers and be covered with transparent insulating sleeves so as to prevent accidental contact with ground or adjacent terminals. The insulating sleeves shall be fire resistant and shall be long enough to overlap the conductor insulation.

1.20 When control cables are to be fanned out and tied together with cord, the Contractor shall make connections to terminal blocks and test the equipment for proper operation before tying the cables together with cord.

1.21 Jointing of cables shall be made in accordance with the applicable Bureau of Indian Standards Code of practice, Owners approval and manufacturer's special instructions. The materials and tools required for cable jointing work shall be in the Contractor's scope.

1.22 The supply of joint boxes shall include all hardware fittings, compounds, tapes and other materials required for making the joints.

Special tools, clips and saddles, glands, seals, PVC sealing compound, locknut, etc, required for connection and termination of cables shall be in the Contractor's scope.

1.23 All cables shall be megger-tested before jointing. After jointing is completed all L.V cables shall be megger-tested.

Cable cores shall be tested for:

i. Continuity.
ii. Absence of cross phasing
iii. Insulation resistance to earth.
iv. Insulation resistance between conductors.

2.0 CABLE TRAYS, ACCESSORIES & TRAY SUPPORTS, CONDUITS, PIPES AND DUCTS

2.1 Cable trays shall be run either in concrete cable trench or overhead supported from building steel. The cable trays shall be ladder type for power cable and perforated type for Control cable. The trays shall be supplied with matching fittings and accessories.

2.2 Cable tray shall be fabricated out of rolled mild steel sheets free from flaws such as laminations, rolling marks, pitting etc. Minimum thickness of cable trays shall be 2.0mm.

2.3 Cables shall be clamped to the cable trays in the horizontal runs with 18 gauge GI wires. For vertical runs the cables shall be clamped with suitable site-fabricated clamps.

2.4 All cable trays including perforated sheet trays, weld mesh trays, vertical raceways shall be hot-dip galvanized and epoxy coated. The trays shall be of standard width of 150mm, 300mm, 450mm & 600mm and standard length of 2.5M. Trays upto 300mm shall be perforated type and above 300 mm shall be ladder type.

2.5 The conductors carrying AC and DC supplies shall not be bunched together in a conduit. Where single-core cables are individually drawn into separate pipes, HDPE pipes shall be used.

Technical Specification for Cable Installation and Accessories

2.6 Flexible metallic conduits shall be used for termination of connections to equipment to be disconnected at periodic intervals and also for termination of connections to level switches, limit switches, pressure switches etc.

2.7 In order to minimize condensation or sweating inside the conduit, all outlets of the conduit system shall be properly drained and ventilated so to prevent entry of insects and water as far as possible.

2.8 The conduits or pipes shall be run along walls, floor and ceilings, on steel supports, embedded in soil, floor, wall or foundation, in accordance with the relevant layout drawings, approved by the Owner.

2.9 All fittings in the conduit systems having threaded connections shall be tightened with full thread engagement and with a minimum of wrench work in order to avoid wrench outs.

2.10 Embedded conduits running parallel to a masonry surface shall, wherever possible, have a cover of at least 38 mm.

2.11 The conduits shall be lead into terminal boxes through the entry points provided by the equipment manufacturers unless otherwise shown in the drawings or unless otherwise directed by the Engineer.

2.12 While installing asbestos pipe or other fiber conduit, cracked pieces shall not be used. The sections cracked or broken during or after placement shall be replaced.

2.13 For underground conduit runs the Contractor shall excavate and backfill as necessary.

2.14 Exposed conduit shall be adequately supported by racks and clamps or straps or by other approved means.

2.15 Where conduits are stubbed out of masonry for future extension outside the structure, they shall be specially protected against corrosion and shall be boxed in against possible physical damage.

2.16 Each conduit run shall be marked with its designation as indicated on the drawings - 'Identification'.

2.17 Where conduit and boxes in locations of severe exposure require, painting of galvanized surfaces with Alkyd Resin Zinc Dust paint following by a finish coat of Aluminum paint, shall be performed by the Contractor in a good and approved manner.

2.18 The Contractor shall bond of metal pipes or conduits in which cables have been installed to the main earthing system.

2.19 The conduits and accessories shall be adequately protected against mechanical damage as well as corrosion.

Technical Specification for Cable Installation and Accessories

3.0 TERMINATION AND STRIGHT THROUGH JOINTS

3.1 Termination and jointing kits for 11KV and 33KV grade XLPE insulated Aluminum cables shall be proven design and make already been extensively used and type tested. Termination kit and jointing kits shall be pre moulded type, taped type or heat shrinkable. The joints and termination shall be tested as per IS 13573. The kit contents shall be of proven design and type tested. Kit contents shall be supplied from the same source as were used for type tested. The kit shall be complete with Aluminum solderless crimping cable lugs and ferrules as DIN standard

The termination kit make and specification shall be strictly as per approval of the Owner.

3.2 The straight through and termination kit shall be suitable to withstand the fault level for 11KV and 33KV system

4.0 CABLE GLANDS, LUGS & ACCESSORIES

4.1 The cable shall be terminated using double compression type cable glands. The cable glands shall confirm to BS 6121 and of robust construction capable of clamping the cables and armour firmly without injury to the insulation. The cable glands shall be made out of heavy duty brass machine finished and nickel chrome plated. The thickness of plating shall not be less than 10 micron. The rubber component shall be made out of neoprene and tested quality.

4.2 The trefoil clamps for single core cables shall be pressurized die cast Aluminum or fiber Glass or Nylon and shall include necessary fixing accessories such as GI bolts and nuts. Trefoil clamps shall have adequate mechanical strength to withstand the forces generated by short circuit current.

4.3 Cable End seal (Roxtec/MCT Brattberg) shall be provided for all Control Cable and Power Cable (including outgoing HT panels) at all the points wherever cable entries in the control room building or between room to room. 30% Spare modules shall be provided along with centre core has to be provided. System shall take up variation margin of +/-3mm in diameter of Cable. For details refer specs.

5.0 DEVIATIONS

Deviation from this specification, if any, shall be clearly brought out in the offer. Unless owner explicitly accepts such deviations, it shall be considered that the offer fully complies with the specification.

Technical Specification

of

Illumination and Lighting System

Specification no – BSES-TS-98-ILS-R1

Rev		1
Page		1 of 12
Date		24 July 2024
Prepared by	Supriya Raina	
	Uttam Shukla	
Reviewed by	Abhinav Srivastava	
Approved by	Gopal Nariya	

INDEX

1.# SCOPE....3#
2.# STANDARDS AND CODES....3#
3.# ILLUMINATION SYSTEM....4#
4.# DISTRIBUTION PILLARS FOR NORMAL ILLUMINATION SYSTEM....6#
5.# LIGHTING DISTRIBUTION BOARDS....7#
6.# MAIN EMERGENCY LIGHTING BOARD....8#
7.# LUMINAIRES....9#
8.# JUNCTION BOXES/WALL BOXES....10#
9.# AUTOMATIC LIGHTING CONTROLLER....10#
10.# SOCKETS & SWITCHES....10#
11.# NAMEPLATE & MARKING....11#
12.# APPROVED MAKE OF COMPONENTS....11#
13.# INSPECTION & TESTING....12#
14.# DEVIATION....12#

1. SCOPE

The specification covers the design, engineering, manufacture, assembly and testing at manufacturer's work, supply and installation of Illumination system for substation including normal distribution pillars, normal lighting board, emergency distribution pillar, emergency lighting board, Junction boxes, Illumination lamps with required lux level.

2. STANDARDS AND CODES

Standard Code	Standard Description
IS 16101 : 2012	General Lighting -LEDs and LED modules – Terms and Definitions
IS16102(Part 1) 2012	Self-Ballasted LED Lamps for General Lighting Services, Part 1 Safety Requirements
IS16102(Part 2) 2012	Self-Ballasted LED Lamps for General Lighting Services, Part 2 Performance Requirements
IS16103(Part 1) 2012	Led Modules for General Lighting, Part 1Safety Requirements
IS16103(Part 2) 2012	Led Modules for General Lighting, Part 2 Performance Requirements
IS15885(Part2/Sec13)	Safety of Lamp Control Gear , Part 2 Particular Requirements , Section 13 dc. or ac. Supplied Electronic Control gear for Led Modules
IS16104 : 2012	d.c. or a.c. Supplied Electronic Control Gear for LED Modules - Performance Requirements
IS16105 : 2012	Method of Measurement of Lumen Maintenance of Solid State Light (LED) Sources
IS16106 : 2012	Method of Electrical and Photometric Measurements of Solid-State Lighting (LED) Products
IS 16107(Part 1)2012	Luminaires Performance ,Part 1 General Requirements
IS 16107(Part 2)2012	Luminaires Performance, Part 2 Particular Requirements ,Section 1 LED Luminaire
IS 16108 : 2012	Photo biological Safety of Lamps and Lamp Systems
IS 10322 : 2012	Luminaires: Part 5 Particular requirements, Section 3 Luminaires for road and street lighting
IS 5	Colours for Ready Mixed Paints and Enamels
IS 613	Copper Rods and Bars for electrical purposes
IS 694	PVC Insulated cables for working voltages up to and including 1100 V
IS 2551	Danger notice plates
IS 5082	Wrought Aluminium and Aluminium alloy bars, rods, tubes and sections for electrical purpose
IS 6665	Code of practice for industrial lighting
IS 13703	LV Fuses for voltage not exceeding 1000V ac or 1500V dc
IS 10118	Code of Practice for Selection, Installation and Maintenance of

	Switchgear and Controlgear
International Standard	
IEC 62612	Self-ballasted LED lamps for general lighting services for voltage above 50 V — Performance requirements
IEC : 60598-2-3	Particular requirements - Luminaries for road and street lighting
IEC 62471	Photo biological safety of lamps and lamp systems
IEC 62778	Application of IEC 62471 for the assessment of blue light hazard to light sources and luminaries
IEC 61000-4-5	Electromagnetic compatibility (EMC) - Part 4-5: Testing and measurement techniques - Surge immunity test
IEC 60439	Low Voltage Switchgear and Controlgear assemblies - Type tested and partially type tested assemblies
IEC 60529	Degrees of protection provided by enclosures (IP Code)
IEC 60947-1	Low Voltage Switchgear and Controlgear - General Rules
IEC 60947-2	Low Voltage Switchgear and Controlgear - Circuit breakers
IEC 61643	Low-voltage surge protective devices

3. ILLUMINATION SYSTEM

3.1.	Lux level requirement	3.1.1. The design of the illumination system shall ensure availability of the minimum illumination levels as specified below with the maximum possible uniformity in the entire substation. The illumination system shall consist of the normal lighting system and emergency lighting system. The minimum illumination levels at workplane i.e at height of 0.00 mtr. shall be as specified below(Reference IS3646(Part II)). 3.1.1.1. Roads within substation : 20 lux 3.1.1.2. Boundary wall of the substation : 10 lux 3.1.1.3. Control room : 300 lux 3.1.1.4. Switchgear Room : 200 lux 3.1.1.5. Battery room : 100 lux 3.1.1.6. Stair case : 100 lux 3.1.1.7. Power Transformers : 100 lux 3.1.1.8. Cable cellar/ Indoor trench : 70 lux 3.1.1.9. Outdoor switchyard : 70 lux 3.1.1.10. APFC/ station trafo : 70 lux 3.1.1.11. Terrace : 20 lux 3.1.2. Contractor shall design the lighting system with the help of desired software. Owner shall verify the same post commissioning with lux meter to check the levels. In case desired lux levels are not met contractor has to install addition fitting in outdoor and indoor location as per requirement. 3.1.3. Complete design calculation sheets for arriving at the number of luminaires required for the normal and emergency requirements shall be furnished by the bidder. Design calculation sheets for the selection of cables, MCB, HRC fuses, bus bars, etc. are also required to be furnished for Owner's approval.

3.2.	Illumination circuit	3.2.1.	The illumination system load and welding load in the substation area shall be supplied from 415/230 volt ACDBs to be provided in the substation control room. Requisite numbers of 3-phase, 4-wire, cable circuits for illumination system and welding socket outlets shall be extended from the above board. The laying of cables from the Board to the illumination system/welding socket outlets and their installation are included in the Bidder's scope.
		3.2.2.	Each outgoing cable circuit for illumination loads from the 415 volt switchboard shall terminate in the respective outdoor pillar boxes located in the substation. Outgoing feeders from the illumination shall be taken to the various illumination points in the substation. Necessary fuses shall be provided near light fixtures in the substation.
		3.2.3.	The emergency illumination load shall be supplied from the main emergency illumination board located in the control room. Necessary cable circuits with appropriate fuses shall be provided by the Contractor for the supply system for emergency illumination load of the substation.
		3.2.4.	Emergency DC lighting system shall be provided in the substation wherever required. The emergency lighting shall be adequate for safe movement by the operating personnel in the substation in the event of failure of normal lighting system. Number of lights shall be decided at the time of detailed engineering. A total of minimum 12 no's individually controllable 18 watt LEDs shall be provided in the substation.
		3.2.5.	6 Nos. welding sockets to be provided, 4 Nos. in Outdoor Yard & 2 Nos. in Control room building.
		3.2.6.	Illumination to be provided inside the Indoor trenches as per required lux level.
		3.2.7.	At terrace, the lights shall be installed on Mumty external wall. No lighting pole is recommended.
3.3.	Wiring	3.3.1.	All lighting fixtures and 5A convenience outlets shall be wired with 1.1 KV grade PVC insulated extra flexible, multistranded, copper conductor cables of size not less than 2.5 sq.mm.
		3.3.2.	For 15A heavy-duty outlets copper conductor cables of size not less than 6 sq. mm shall be used.
		3.3.3.	The wiring shall consist of phase, neutral and ground. For grounding the lighting fixtures/convenience outlets etc. Green CU wire of size 2.5 sqmm shall be used. The phase and neutral conductor shall be suitably colour coded. For DC black & white wires to be used.
		3.3.4.	Supply shall be looped between the lighting fixtures of the same circuit by using junction boxes. For this purpose one (1) 100 mm x 100 mm square junction box shall be provided for each lighting fixture. For recessed lighting fixtures, supply shall be extended from the junction boxes to the fixtures by means of flexible conduits. The conduits shall be of HMS (High mechanical stress) type and of

		minimum dia 25 MM. While for stem-mounted/wall-mounted lighting fixtures the junction box shall be mounted below one of the mounting stems. 3.3.5. For lighting branch circuits the nos. of lighting switches shall be decided keeping in mind the ease of control, as well as to limit the current to 2.5A per circuit. 3.3.6. For convenience outlets, the bidder shall design the wiring scheme so as to limit 6 nos. of 5A outlets per branch circuit and two nos. of 15A outlets per branch circuit. 3.3.7. All wiring materials such as terminals, crimping lugs, ferrules etc. shall also be provided by the Contractor. 3.3.8. No section of the conduit shall be filled with more than 70% of its area. Any consumable material that is required for pulling the wires through conduit shall also be provided by the Contractor. 3.3.9. Lighting fixtures coming in one area shall be evenly distributed between three phases so that tripping of one phase or two phases does not cause total loss of illumination in that area.
3.4.	Required documents to be submitted	Complete manufacturer's literature/catalogues, performance curves, illumination distribution curves, G.A. drawings, specification sheets, etc. as relevant in respect of all materials/equipment to be supplied shall be submitted by the Contractor.
3.5.	Illumination system check after installation	After completion of installation of the illumination system in the substation, the actual illumination level at different locations shall be measured by the Contractor in the presence of Owner's authorised representative. If the average value of the measured illumination levels is found to fall short of the specified levels, the Contractor shall have to provide additional lighting fixtures so as to achieve the specified levels of illumination at no additional cost to the Owner. While measuring the illumination levels due allowance shall be made on account of maintenance factor. The specified lux levels shall be suitably increased to cover maintenance factor of 0.6 for outdoor areas.

4. DISTRIBUTION PILLARS FOR NORMAL ILLUMINATION SYSTEM

4.1.	Construction	4.1.1. Distribution pillars of adequate dimensions shall be constructed from sheet steel having a thickness not less than 2 mm. 4.1.2. The pillars shall be totally enclosed weather-proof, dustproof, vermin-proof, having hinged doors with locking arrangement and shall be capable of being mounted in the substation. 4.1.3. The pillars suitable for cable entry at the bottom shall be designed for easy access of connections to terminals and inspection of equipment mounted therein. 4.1.4. The degree of protection of the board shall be IP55. 4.1.5. The enclosure shall be painted externally with Shade No., 692 of IS:5 and internally with brilliant white of semi-glossy

		finish of IS:5. 4.1.6. Location of LDB, ELDB & PDB to be finalized during detailed engineering.
4.2.	Configuration	4.2.1. Each pillar shall accommodate the following: 4.2.2. One incoming, 4-pole (3 phase and neutral) isolating switch with MCB of appropriate current rating. 4.2.3. 3-phase and neutral bus bars of appropriate current rating. 4.2.4. Single-pole earth leakage circuit breakers of suitable current ratings on all outgoing circuits. 4.2.5. Neutral links for all outgoing circuits. 4.2.6. Cable lugs, compression type cable glands, name plates, circuit numbers, earthing lugs, etc. to make the pillar complete in all respects. 4.2.7. 20% spare outlets shall be provided for outgoing feeders. 4.2.8. Three (3) indicating lamps with fuses to indicate that supply is 'ON'.

5. LIGHTING DISTRIBUTION BOARDS

5.1.	Construction	5.1.1. Metal-clad enclosure with minimum 2 mm CRCA sheets for load-bearing members and 1.6 mm for non load-bearing members suitably reinforced with structural. 5.1.2. 3-phase, 4-wire bus bar system with high conductivity aluminium busbars mounting on FRP insulators having anti-tractive property with minimum 25 mm phase-to-phase and minimum 19 mm phase-to-earth clearances. The busbars shall be uniform throughout the length of the LDB and busbar joints shall be silver plated and covered with shrouds. 5.1.3. All cables shall enter from the bottom. 5.1.4. The degree of protection for the LDB shall be IP-54. 5.1.5. The enclosure shall be painted externally with Shade No., 692 of IS:5 and internally with brilliant white of semi-glossy finish of IS:5.
5.2.	Configuration	Each LDB shall accommodate the following: 5.2.1. One incoming, 4-pole (3 phase and neutral) isolating switch with MCB of appropriate current rating. 5.2.2. 3-phase and neutral bus bars of appropriate current rating. 5.2.3. 4 Pole outgoing MCBs of appropriate rating 5.2.4. Cable lugs, compression type cable glands, name plates, circuit numbers, earthing lugs, etc. to make the pillar complete in all respects. 5.2.5. 20% spare outlets shall be provided for outgoing feeders. 5.2.6. Three (3) Nos. indication lamps (Red, Yellow, Blue) shall be provided to indicate that the incoming supply is available. Similarly, 3 Nos. indication lamps shall be provided to indicate that the busbar is energised.

5.3.	Busbar	5.3.1. The busbars shall be suitable for short-time current rating of 40KA for 1 Sec. 5.3.2. The busbar temperature rise shall not exceed 35 Deg C over an ambient of 50 Deg C. 5.3.3. The LDBs shall be provided with a continuous busbar of 25 x 6 sq.mm (electrolytic copper) with suitable hardware for connection to the main grounding grid

6. MAIN EMERGENCY LIGHTING BOARD

6.1.	Construction	6.1.1. Metal-clad enclosure with minimum 2 mm CRCA sheets for load-bearing members and 1.6 mm for non load-bearing members suitably reinforced with structural. 6.1.2. All cables shall enter from the bottom. 6.1.3. The degree of protection for the LDB shall be IP-54. 6.1.4. The enclosure shall be painted externally with Shade No., 692 to IS:5 and internally with brilliant white of semi-glossy finish to IS:5.
6.2.	Configuration	6.2.1. Each Board shall accommodate the followings: 6.2.2. Automatic changeover contactor. 6.2.3. Voltage sensing relays. 6.2.4. Time delay relay. 6.2.5. Bus Bars. 6.2.6. Two pole MCBs of adequate ratings for incoming and outgoing feeders. 6.2.7. Test switch, push button type. 6.2.8. Indicating lamps, ac - Green, dc - Red. 6.2.9. Terminals for remote indication 6.2.10. Cable lugs, compression type cable glands, name-plates, circuit numbers, earthing lugs and remote indication wiring upto substation 415V a.c. control board, to make the board complete in all respects.
6.3.	Changeover facility	The main emergency lighting board shall have an automatic changeover switch to energise the dc lighting system in the event of AC power failure. It shall have voltage-sensing relays to perform the changeover automatically when AC voltage of any one phase falls below 60 percent of 240 volts and continues at that low level for more than 10 seconds. These shall changeover from DC to AC again when 70 percent of 240 volt is restored and this continues for 10 seconds.
6.4.	Emergency Lighting Pillar	Local Emergency Lighting Pillar shall be identical in details to Lighting Distribution Pillar specified in clause 4 except that it shall have two pole isolating switch fuse unit on the incoming side and only two busbars and shall be without neutral links.

7. LUMINAIRES

7.1.	Luminaires type	Luminaires for use in normal and emergency illumination systems in the substation shall be suitable for LED lamps. All the luminaires shall be supplied complete with all accessories and lamps. The LED lamps ratings shall be adequate to achieve the required Lux level and calculation for number of luminaires shall be in the bidder's scope.
7.2.	Flood lights	The flood light luminaires in the substation shall be fixed at suitable height on the substation structures/ building, so as to provide the specified minimum illumination in the substation area without causing any glare to the operational/ maintenance staff working in the substation. While fixing the luminaires it shall be ensured that the stipulated electrical clearances are not violated. The Contractor shall supply and install suitable type of non-mettalic street light poles or octagonal galvanished poles required for installing the fittings for illuminating the roads, fence boundary wall etc.
7.3.	Reliability	Substation lighting circuits shall be divided into two or three sections and provided with time switches of suitable ratings.
7.4.	Design features for Outdoor Luminaires	
7.5.	Fixture	7.5.1. The luminaries housing shall be either extruded or pressure die casted aluminium of minimum 1.6 mm thickness. Body must be Corrosion Resistant Powder Coated and UV resistant. 7.5.2. The entire housing shall be dust and waterproof having Ingress protection of housing as IP65 or above as per IEC 60529. 7.5.3. Luminaire should be covered with suitable Glass or diffuser with high Transitivity. All luminaires shall be supplied with either clear toughened glass or clear polycarbonate cover for better IP retention and higher life.
7.6.	LED	7.6.1. The luminous efficacy of LED luminaire shall be at least 85 lumen/watt. 7.6.2. LED module efficacy shall not be less than 90 percent of the rated LED module Efficacy. 7.6.3. Color Rendering Index (CRI) shall be at least 70 7.6.4. Color Temperature shall be 5500-6500K 7.6.5. Uniformity Emin/Eavg> 0.4, Emin/Emax>0.33
7.7.	LED Driver	LED driver shall have following features: 7.7.1. LED driver shall be applicable for Power supply 240V AC±10%, at 50Hz+3% / -5%. 7.7.2. Output voltage of the driver shall bedesigned to meet the Power Requirementsof the system. 7.7.3. Power factorofcompletefitting shall bemorethan 0.90atfull load.

		7.7.4. Total Harmonic Distortion (THD) shall be< 10 %
7.8.	General Requirements	7.8.1. The connecting wires used inside the Luminaire, shall be low smoke halogen free, fire retardant e-beam cable and fuse protection shall be provided in input side. 7.8.2. The lumen maintenance of a11 the LED fixtures shall not be less than70% after 50,000 hours. 7.8.3. Built in protection features for Short circuit, Surges (at least upto 5kV), and overvoltage shall be provided. 7.8.4. High /Low voltage cut-off shall be provided. 7.8.5. The whole luminaire shall be eco-friendly green technology based i.e. mercury free. 7.8.6. No UV and IR radiations shall be produced. 7.8.7. Access of driver for maintenance shall be provided at the top/side of the luminaire fixture. 7.8.8. All fasteners must be of stainless steel.

8. JUNCTION BOXES/WALL BOXES

8.1.	Size	100 mm x 100 mm junction boxes and wall boxes of standard size shall be provided.
8.2.	Construction	Wall boxes and junction boxes shall be made of FRP with a thickness of 2.0mm. Necessary conduit termination fittings such as bushings, locknuts etc. also be provided.

9. AUTOMATIC LIGHTING CONTROLLER

9.1.	Size	Contractor shall provide microprocessor based automatic lighting controller for controlling switching arrangement of indoor and outdoor lighting. The controller shall have provision of setting 52 week ON / OFF time as per astronomical clock or as per user requirement. All abnormal events shall be recorded in the controller. Secure / Genus or equivalent are approved makes.

10. SOCKETS & SWITCHES

10.1.	Indoor	All sockets and switches shall be modular and universal type suitable for 5/15A
10.2.	Outdoor	Two nos transformer oil filtration sockets shall be provided, one at each transformer bay. These sockets shall be three phase industrial type and rated for 100A.

11. NAMEPLATE & MARKING

11.1.	Name plate details of LED housing	Followings shall be clearly engraved/embossed on the die cast housing of LED: Rated voltage or voltage range (marked 'V' or 'Volt'); 11.1.1. Rated current (marked A' or 'Ampere'); 11.1.2. Rated wattage (marked 'W' or 'Watts'); 11.1.3. Rated frequency (marked in 'Hz') 11.1.4. Rated lumen 11.1.5. Indian/International Standards to which it is manufactured 11.1.6. Month and year manufacture 11.1.7. Customer Name - BSES Yamuna / Rajdhani Power Ltd 11.1.8. Fitting serial number 11.1.9. PO no and date 11.1.10. Guarantee period
11.2.	Panel nameplate and marking details	
11.2.1.	Panel nameplate	Panel shall have a nameplate clearly indicating the following: 11.2.1.1. Panel Serial No.- 11.2.1.2. Customer Name - BSES Yamuna/ Rajdhani Power Ltd 11.2.1.3. PO No. & date - 11.2.1.4. Panel Name - 11.2.1.5. Current rating - 11.2.1.6. Guarantee period -
11.2.2.	Feeder nameplate	Large and bold name plate carrying the feeder identification shall be provided on the top of each module.
11.2.3.	Danger plate	Panel shall have a danger plate of anodized Aluminium clearly indicating the danger logo and voltage details.
11.2.4.	Material	Anodized Aluminium 16SWG. Nameplates shall be satin silver in colour with black letters engraved on them. Stickers are not allowed.
11.2.5.	Fixing	All nameplates shall be riveted to the panels at all four corners. Bolting/screwing is not acceptable.

12. APPROVED MAKE OF COMPONENTS

12.1.	Relays	ABB/Jyoti/Omran
12.2.	HRC Fuse Links	GE/ Siemens/ L&T
12.3.	AC Contractors/ DC contactor	L&T/Siemens/Telemechanique/GE/ABB

12.4.	Terminals	Connectwell/Elmex/Wago/Phoenix
12.5.	Push buttons / Actuator	L&T/Siemens/Vaishno/Schneider
12.6.	MCB	Legrand/Hager/Schneider/ABB
12.7.	LED	NICHIA/ OSRAM/ CREE/ PHILIPS//EDISON
12.8.	Luminaire fittings	GE/Philips/Crompton/Bajaj
12.9.	Indicating lamps	Vaishno/Binay/Teknic/Siemens/Mimic/C&S

13. INSPECTION & TESTING

13.1.	Type test	All Equipment should be of type tested quality only, type test certificate to be submitted along with offer. If the manufacturer's lab is accredited by govt. / authorized body then it shall be acceptable for type testing.
13.2.	Acceptance & Routine tests	As per relevant Indian standard

14. DEVIATION

14.1.	Deviation	Deviations from this Specification shall be stated in writing with the tender by reference to the Specification clause/GTP/Drawing and a description of the alternative offer. In absence of such a statement, it will be assumed that the bidder complies fully with this specification. No deviation will be acceptable post order.

Specification for

Lighting High Mast

Specification no – GN101-03-SP-33-00

Prepared by		Reviewed by		Approved by		Rev No.	Date
Name	Sign	Name	Sign	Name	Sign		
Hemanshi		Abhinav Srivastava		Vijay Panpalia		00	04.01.2012

1.0 Scope of supply

This specification covers the requirement of design, manufacture and testing of 16M high mast along with accessories and requisite hardware. The scope also includes erection, installation and associated civil work like foundation etc.

2.0 Codes & Standards

All standards, specifications, and codes of practice referred to herein shall be the latest edition including all applicable official amendments and revisions as applicable.

IS: 5	1994	Colour for ready mixed paints and enamels.
IS:694	1990	PVC insulated cables for working voltages upto and including 1100V.
IS:800	1984	Code of practice for general construction in steel.
IS:802	1978 Part-2	Code of practice for use of structural steel in Overhead transmission line towers. Part-2 Fabrication, galvanising, inspection and packing.
IS: 875	1987 Part-3	Code of practice for design loads(other than earthquake) for buildings and structures: Wind loads
IS:2062	1992	Steel for general structural purposes.
IS: 2551	1982	Danger notice plates.
IS:2629	1985	Recommended practice for hot dip galvanising on iron and steel.
IS :2633	1986	Methods for testing uniformity of coating of zinc coated articles.
IS :3961	1967 Part-2	Recommended current ratings for PVC insulated cables. Part-2: PVC insulated and PVC sheathed heavy duty cables.
IS :5133	1969 Part-1	Boxes for enclosure of electrical accessories- Part-1: steel and cast iron boxes.
IS: 5831	1984	PVC insulation and sheath of electric cables.
IS :8130	1984	Conductors for insulated electric cables and flexible cords.
IS :10810	1984	Method of tests for cables.
IS:13703	1993 Part-1	Low voltage fuses for voltages not exceeding 1000V AC or 1500V DC .Part-1:General requirements
IS:13703	1993 Part-2	Low voltage fuses for voltages not exceeding 1000V AC or 1500V DC .Part-2:Supplementary requirements for fuses for industrial applications
BS EN 10-027 (part-1)	1992	Designation systems for steel: steel names, principal symbols
BS EN 10-027 (part-2)	1992	Designation systems for steel: steel numbers
BS 5135		National Electrical Code.
BS-EN 10-027		Indian Electricity rules(relevant safety regulation of CEA) and acts

3.0 Service Conditions

Equipment to be supplied against this specification shall be suitable for satisfactory continuous operation under the following tropical conditions.

Maximum Ambient Temperature (Degree C)	50
Maximum temperature in shade (Degree C)	45
Min. Temperature of Air in Shade (Degree C)	-10
Relative Humidity (Percent)	10 To 100
Maximum annual rain fall (mm)	1450
Maximum Wind pressure (Kg/Sq. M.)	150
Maximum altitude above mean sea level (Meters)	3000
Isoceranic level (days per year)	50
Seismic level (Horizontal Acceleration) Moderately hot and humid tropical climate conducive to rust and fungus growth	0.3g

4.0 Technical Requirement

4.1. Structure

The High mast shall be of continuously tapered, galvanised polygonal cross section, at least 20 sided, presenting a good and pleasing appearance, based on proven In-Tension design, conforming to the standards referred to above, to give an assured performance, and reliable service. The structure shall be suitable for wind loading as per IS - 875 Part -III, 1987.

4.2. Construction

The mast shall be fabricated from special steel plates, conforming to BS-EN10-027, cut and folded to form a polygonal section and telescopically jointed and welded. The welding shall be in accordance with BS-5135. The sections are joined together by slip-stressed-fit method. No site welding shall be done. Only bolted joint shall be done on the mast at the site. The minimum over lap distance shall be 1.5 times the diameter at penetration. The dimensions of the mast shall be decided based on proper design and accordingly design calculations shall be submitted for review / approval.

The mast shall be provided with fully penetrated flange, free from any lamination or incursion. The welded connection of the base flange shall be fully developed to the strength of the entire section. The base flange shall be provided with supplementary gussets between the bolt holes to ensure elimination of helical stress concentration. The entire fabricated mast shall be hot dip galvanised both internally and externally.

4.3. Door Opening

An adequate door opening shall be provided at the base of the mast and the opening shall be such that it permits clear access to equipment like winches, cables, plug and socket, etc. and also facilitate easy removal of the winch. The door opening shall be complete with a close fitting, vandal resistant, weatherproof door, provided with a heavy-duty double internal lock with special paddle key.

4.4. Dynamic Loading for the Mast

The mast structure shall designed as per TR No-7 of Institutions of lightning engineers of UK and shall be suitable to sustain maximum reaction arising from a wind speed as per IS-875 (three second gust), and is measured at a height of 10 meters above ground level.

4.5. Lantern Carriage

A fabricated Lantern Carriage shall be provided for fixing and holding the flood light fittings and control gear boxes. The lantern Carriage shall be of special design and shall be of steel tube construction, the tubes acting as conduits for wires, with holes fully protected by

grommets. (The lantern carriage tube should not be used as conduit. Separate flexible conduits are used from CG Boxes to the Flood Light Fixtures) The Lantern Carriage shall be designed and fabricated to hold the required number of flood light fittings and the control gear boxes, and also have a perfect self balance.

The Lantern Carriage shall be fabricated in two halves and joined by bolted flanges with stainless steel bolts and plastic lock type stainless steel nuts to enable easy installation or removal from the erected mast. The inner lining of the carriage shall be provided with protective PVC arrangement, so that no damage is caused to the surface of the mast during the raising and lowering operation of the carriage. The entire Lantern Carriage is hot dip galvanised after fabrication.

4.6. Junction Box

The junction box shall be cast aluminium or SS, weather proof IP67 junction box. It shall be provided on the Carriage Assembly as required, from which the inter-connections to the designed number of the flood light luminaries and associated control gears fixed on the carriage, is made.

4.7. Raising and lowering mechanism

It will be necessary to lower and raise the Lantern Carriage Assembly to install and maintain the luminaries and lamps. To enable this, a suitable Winch Arrangement shall be provided, with the winch fixed at the base of the mast and the specially designed head frame assembly at the top.

4.8. Winch

The winch shall be of completely self-sustaining type, without the need for brake, shoe, springs or clutches. Each driving spindle of the winch is positively locked when not in use. Individual drum also should be operated for the fine adjustment of lantern carriage. The capacity, operating speed, safe working load, recommended lubrication and serial number of the winch shall be clearly marked on each winch.

The gear ratio of the winch shall be 53 : 1 or as recommended by manufacturer. However, the minimum working load shall not be less than 750 kg. The winch shall be self-lubricating type by means of an oil bath and the oil shall be readily available grades of reputed manufacturers and details of the oil shall be furnished.

The winch drums shall be grooved to ensure perfect seat for stable and tidy rope lay, with no chances of rope slippage. The rope termination in the winch shall be such that distortion or twisting is eliminated and at least 5 to 6 turns of rope remains on the drum even when the

lantern carriage is fully lowered and rested on the rest pads. It should be possible to operate the winch manually by a suitable handle and/or by an external power tool. It would be possible to remove the double drum after dismantling, through the door opening provided at the base of the mast. Also, a winch gearbox for simultaneous and reversible operation of the double drum winch shall be provided as part of the contract.

The winch shall be type tested in a reputed test lab/ Institution and the test certificates shall be furnished before supply of materials. Test certificate shall be furnished by the bidder from the original equipment manufacturer, for each winch in support of the maximum load operated by the winch.

4.9. Head Frame

The head frame, which is to be designed, as a capping unit of the mast, shall be of welded steel construction, galvanised both internally and externally after assembly. The top pulley shall be of appropriate diameter, large enough to accommodate the stainless steel wire ropes and the multi-core electric cable. The pulley block shall be made of corrosion resistant material, and is of the cast Aluminium Alloy (LM-6) or SS. Pulley made of synthetic materials such as Plastic or PVC is not acceptable. Self-lubricating bearings and stainless steel shaft shall be provided to facilitate smooth and maintenance free operation for a long period. The pulley assembly shall be fully protected by a canopy galvanised internally and externally.

Close fitting guides and sleeves shall be provided to ensure that the ropes and cables do not dislodge from their respective position in the grooves. The head frame shall be provided with guides and stops with PVC buffer for docking the lantern carriage.

4.10 Stainless Steel Wire Ropes

The suspension system shall essentially be without any intermediate joint and shall consist of only non-corrodable stainless steel of AISI - 316 or better grade.

The stainless steel wire ropes shall be of 7/19 construction, the central core being of the same material. The overall diameter of the rope shall be more than 6 mm keeping in mind contingency. The breaking load of each rope shall not be less than 2350 kg. The design shall have a factor of safety over 5 for the system at full load. The end constructions of ropes to the winch drum shall be fitted with talurit.

The thimbles are secured on ropes by compression splices. Two continuous lengths of stainless steel wire ropes are used in the system and no intermediate joints are acceptable in view of the required safety. No intermediate joints, either bolted or else, shall be provided on the wire ropes between winch and lantern carriage.

4.11 Electrical System, Cable and Cable Connections

A suitable terminal box shall be provided as part of the supply at the base compartment of the high mast for terminating the incoming cable. The electrical connections from the bottom to the top shall be made by special trailing cable. The cable is EPR insulated and PCP sheathed to get flexibility and endurance. Size of the cable is minimum 5 core 2.5 sq mm copper, in case of failure of any core 2 spare cores shall be available. The cable shall be of reputed make. At the top necessary weatherproof junction box to terminate the trailing cable shall be provided. Connections from the top junction box to the individual luminaries is made by using 3 core 1.5 sq mm flexible PVC cables of reputed make. The system shall have in built facilities for testing the luminaries while in lowered position.

Also, suitable provision shall be made at the base compartment of the mast to facilitate the operation of externally mounted, electrically operated power tool for raising and lowering of the lantern carriage assembly. The trailing cables of the lantern carriage rings shall be terminated by means of specially designed, metal clad, multi pin plug and socket provided in the base compartment to enable easy disconnection when required.

4.12 Power Tool for the Winch

A suitable, high-powered, electrically driven, externally mounted power tool, with manual over ride, together with an operating stand shall be supplied for the raising and lowering of the lantern carriage for maintenance purposes. The speed of the power tool may preferably of slow speed, of 1.5 to 1.8 m/minute, so that vibrations associated with high speed operation are avoided. The power tool shall be single speed, provided with a motor of the required rating, suitable for hand/stand operation. The power tool shall be supplied complete with push button type remote control switch, together with 6 (six) meters of power cable, so that the operations can be carried out from a safe distance of 5 (five) meters. The capacity and speed of the electric motor used in the power tool shall be suitable for the lifting of the design load installed on the lantern carriage.

The power tool stand shall be so designed that it will not only be self-supporting but also aligns the power tool perfectly with respect to the winch spindle during the operations. Also, a handle for the manual operation of the winches in case of problems with the electrically operated tool shall be provided and shall incorporate a torque-limiting device.

A separate torque-limiting device to protect the wire ropes from over stretching shall be provided. It shall be mechanical with suitable load adjusting device. The torque limiter is a requirement as per the relevant standards in view of the overall safety of the system.

4.13 Lightning Finial

One number heavy-duty hot dip galvanised lightning finial shall be provided for each mast. The lightning finial shall be minimum 1.2 m in length and shall be provided at the centre of the head frame. It shall be bolted solidly to the head frame to get a direct conducting path to the earth through the mast. The lightning finial shall not be provided on the lantern carriage under any circumstances in view of safety of the system.

4.14 Aviation Obstruction Lights:

Based on site and project specific requirements, 2 nos. Low Intensity Type-B (as per Table 6.3 of Volume-1, Annexure-14 of ICAO Guideline for Aerodrome Design & Operations) LED type aviation obstruction lights of reliable design and reputed manufacturer shall be provided on top of each mast.

4.15 Earthing Terminals:

Suitable earth terminal pad using twin 12 mm diameter stainless steel bolts shall be provided at a convenient location on the base of the Mast, for lighting and electrical earthing of the mast.

4.16 Luminaries:

The non-integral floodlight luminaries with LED Lamp shall be provided with each mast. Optical compartment of the luminary shall be IP 66 and control gear compartment shall be IP 54 or better. Bajaj, Crompton and Philips make luminaries are approved. Detailed technical brochure shall be provided along with the bid.

4.17 Feeder Pillar:

Feeder pillar required for feeding power to the Lighting mast shall also be supplied along with the mast and its accessories. The feeder pillar is fed from the main switchgear / main lighting distribution board. The outgoings of this feeder pillar are connected to the MCBs in the mast. The feeder pillar shall be FLP or WP IP 54 with rain protection canopy in galvanised CRCA sheet or cast Aluminium body (for FLP) and finished with two coats of epoxy primer and grey enamel paint of shade 631 of IS-5. The feeder Pillar shall comprise of incoming 32 Amp TPN switch, HRC fuses, outgoing 25 Amp SP MCB, Time switch and contactor for automatic on & off of circuit with manual override, TP MCB for power tool contactors for reversing the motor and overload Protection of motor. Feeder pillar shall be mounted on suitable foundation near to the mast.

5.0 Tests

All type test certificates for the tests listed in the relevant standards, conducted on identical masts shall be submitted to BSES for approval. Routine tests & acceptance tests as per relevant IS shall be conducted as per approved Quality Plan.

6.0 Marking / Name Plate

The high mast shall be provided with "BSES" insignia with anodized aluminium plate. Anodized plate showing 24X7 customer care number shall also be provided. Name plate shall include manufacturer name, date of manufacturing, warranty period and other details as per standards.

Annexure A: Guaranteed Technical Parameters

Sl. No.	Particulars	Data by purchaser			Data by seller
1	**Name and address of manufacturer**				
2	**Overall height of high mast**	12 mtrs	16 mtrs	20 mtrs	
2.1	Make				
2.2	Material of construction of shaft	Grade S355 J O as per BSEN 10025 or equivalent			
2.2	Cross section of mast	20 sided, regular continuously tapered polygonal			
2.3	Number of sections	One	Two	Two	
2.3	Minimum thickness of shaft (mm)	4 mm	Bottom section: 5 mm Top section: 4mm	Bottom section: 5 mm Top section: 4mm	
2.4	Length of individual section (mm)	12000 mm	10900mm / 5850mm	10375mm / 10375mm	
2.5	Minimum Base and top diameter	340mm (A/F) and 150 mm (A/F)	450mm (A/F) and 150 mm (A/F)	500mm (A/F) and 150 mm (A/F)	
2.6	Type of joints	No site joints, mast should be delivered in a single section	Telescopic slip joint, stress fitted	Telescopic slip joint, stress fitted	
2.7	Length of overlap	N/A	750mm	750mm	
2.8	Metal protection treatment of fabricated mast section	Hot dip galvanization through single dipping process			
2.9	Thickness of	Minimum 85 microns as per IS:2629			

Sl. No.	Particulars	Data by purchaser			Data by seller
	galvanizations				
2.10	Size of opening door at base	Approx. 250 X 1200 mm			
2.11	Type of locking arrangement and door construction	Anti vandal type			
2.12	Details of struck board inside	Insulated base board			
2.13	Size , material and thickness of cable termination box				
2.14	Minimum size of base plate diameter	540 mm (min.)	650 mm (min.)	680 mm (min.)	
2.15	Minimum size of base plate thickness	25 mm thick			
2.16	Minimum size of anchor plate thickness	8 mm			
2.17	Details of template	Same as anchor plate but 2 mm thick			
3	**Dynamic loading as prevailing at site**				
3.1	maximum wind pressure (basic wind speed)	47m/s as per IS:875, p-3			
3.2	Maximum gust speed time	3 seconds			
3.3	Height above ground level at which wind speed is consider	10 mtrs			
3.4	Factor of safety for wind load	1.25			
3.5	Factor of safety for other load	1.15			
3.6	Application standard for mast design	Technical report #7:2000 by ILE, UK			
4	**Foundation details**				
4.1	Type of foundation	Open raft shallow footing or pile as applicable			
4.2	Size of foundation	as per design conforming to IS:456			
4.3	Design safety factor	2			
4.4	Considered wind speed	180 m /s			
4.5	Depth of foundation	As per requirement of design			
4.6	Average soil bearing capacity	As per site condition			
4.7	Numbers of foundation bolts	6 nos	8 nos		
4.8	PCD of foundation bolts	440 mm (min.)	550 mm (min.)	600 mm (min.)	
4.9	Type of foundation bolt	Tor steel			
4.10	Bolt diameter / length	25mm dia / 750 mm	32mm dia / 1325 mm	40mm dia / 1375 mm	
5	**Lantern Carriage**				

Sl. No.	Particulars	Data by purchaser			Data by seller
5.1	Diameter of Carriage Ring	Suitable to carry up to 4 nos. floodlights	1200 mm	1200 mm	
5.2	Construction	MS Channels / Tube, Hot dip galvanized	Channels 75X40X4mm thick	Channels 75X40X4mm thick	
5.3	Number of joints	As per manufacturer's standard design (2 segments as per Cl no.4.5)	3 segments (2 segments as per Cl no.4.5)	3 segments (2 segments as per Cl no.4.5)	
5.4	Buffer arrangement between carriage and mast	Rubber padded guide ring provided			
5.5	Load carrying capacity	500 kg	750 kg	750 kg	
5.6	Total weight of assembly with fitting	as per design			
6	**Winch**				
6.1	Make of winch				
6.2	Number of drums/ winch	Double drum			
6.5	Gear Ratio				
6.3	Capacity	SWL 500 kg	SWL 750 kg		
6.4	Method of operation	Manual and Inbuilt power tool			
6.6	Operating speed				
6.7	Lubricant Arrangement	Permanent oil bath			
6.8	Type of lubricant				
6.9	Material of construction of gear	Phosphorus Bronze / EN 19			
6.10	Tested load per drum	500 kg	750 kg		
6.11	SWL of winch at 410 rpm	500 kg SWL	750 kg SWL		
7	**Wire rope**				
7.1	Make				
7.2	Grade	AISI 316			
7.3	Number of ropes	3 nos / 5mm (three wire rope)	3 nos / 6 mm (three wire rope)		
7.4	Construction	7./19			
7.5	Diameter of Wire rope	5mm	6mm		
7.6	Factor of safety	Not less than 5	Not less than 6		
7.7	Breaking capacity	Minimum 2350Kgs. X 2			
8	**Cable**				

Sl. No.	Particulars	Data by purchaser		Data by seller
8.1	Type	EPR coated PCP sheathed		
8.2	Material	Multicore copper conductor		
8.3	Make	Finolex, torrent, Polycab, KEI, Havells		
8.4	Current carrying capacity	As per IS 9968 (Part - 1), 1998		
8.5	conductor size	5CX2.5 sqmm.		
9	**Torque limiter**			
9.1	Lifting capacity	Upto 500 kg	Upto 750 kg	
9.2	Adjustable / non adjustable	Adjustable		
10	**Lantern and Fixture**			
10.1	Type Of Lamp	LED, Asymetrical IP65 fitting		
10.1.1	Wattage	400W		
10.1.2	Make			
10.1.3	Model Number			
10.2	Housing	Single piece gravity die-cast		
10.2.1	Material	Aluminium alloy: LM6		
10.2.2	Ingress protection			
10.2.3	For optical compartment	IP:65/IP:66		
10.2.4	For control gear compartment	IP:54 or better		
10.2.5	Dimensions of lantern	As per design standard		
10.2.6	Weight of lantern with control gear	As per design standard		
10.3	Lamp Cover	Perspex/Toughened glass		
10.3.1	Toughened glass			
10.3.2	Class of glass	AA/SSQ		
10.3.3	Nominal thickness	5mm		
10.3.4	Perspex thickness	2.5mm+/-0.4 mm		
10.4	Material of gasket	Slicon Rubber/ Neoprene		
10.5	Lamp holder	Screw type/three pin type		
10.5.1	Material	Porcelain		
10.6	Ballast	Conventional/Open type/ VI/VPI		
10.6.1	Ballast voltage	240V AC		
10.6.2	Minimum open circuit voltage	198V		
10.6.3	Frequency	50 Hz		
10.6.4	Current output(A), at rated voltage			
10.6.5	Voltage to current ratio ( ) +/-0.5%			
10.6.6	Watt loss (W)	To be specified		
10.7	Power factor of lantern	More than 0.95 lag		
10.7.1	Value of capacitor	To be specified		
10.8	Igniter	Three wire		
10.9	Reflector	Anodised/POT		

Sl. No.	Particulars	Data by purchaser			Data by seller
10.9.1	Angle of tilt of lamp	To be specified			
10.9.2	Downward light output ratio	More than 70%			
10.9.3	Angle of throw	As per clause 5.12.5			
10.9.4	Angle of spread	As per clause 5.12.6			
10.9.5	Luminous intensity in C = 0° plane at γ = 90°	Less than 10 Cd/klm			
10.9.6	Luminous intensity in C = 0° plane at γ = 80°	Less than 30 Cd/klm			
10.10	Make of fixture	Bajaj, GE, Philips and CGL			
10.10.1	Nos of fixture provided with high mast	4	5	6	
10.10.2	Type of fixture	Weather proof			
11	**Others**				
11.1	Make of 24 hour Differential Timer Switch	Legrand/ GE/ Schnider/ L&T			
11.2	Make of 32A TPN MCB	GE/ Hager/ Legrand/ Schnider			
11.3	Make of 32A Contactor	L&T/ Schnider/ GE			
11.4	Earth pit	Two numbers of treated earth pit with each mast			
12	GTP and Drawing Submitted	Yes/No			
13	Type Tests Submitted	Yes/ No			
14	Technical Brochure of luminaries submitted	YES / NO			
15	Operation and maintenance manual submitted	YES / NO			

BSES Rajdhani Power Limited
BSES Bhawan, Nehru Place, New Delhi- 19

TECHNICAL SPECIFICATION

FOR

MATERIALS WORKMANSHIP & TEST

Prepared by					**Rev: 0**
Reviewed by					**Date:**
Approved by					

1.0 MATERIAL, WORKMANSHIP & TESTS

1.1 General

All materials used in the manufacture of the offered plant equipment shall be of high grade, free from defects and imperfections, of recent manufacture and unused. Materials not specifically described elsewhere, shall as far as applicable and practicable conform to the latest specification of ISS where applicable and equivalent International Standards. Liberal factors of safety shall be used throughout the design for all parts of plant equipment when subjected to the most severe operating conditions. The working stress in all parts of the plant equipment shall be bestowed with ample margins for possible overstressing due to shock.

All work shall be performed and completed in accordance with the best modern shop practice in manufacture of high grade equipment.

Castings shall be free from blow-holes, flaws, cracks or other defects; and shall be smooth, close-grained and of true form and dimensions. No plugged or filled-up holes or other defects will be accepted. No casting shall be burned, plugged, patched or welded; and no repairs or defects will be accepted.

All materials, supplies, parts and assemblies supplied under this specification shall be tested as far as reasonably practical.

All welded joints shall be free from defects such as blow-holes, slag inclusions, lack of penetrations, under-cuts, cracks etc; and shall be made by qualified and tested welders. Slag shall be ground after joint completion; and well reinforced smooth welds shall be made.

1.2 Inspection, Testing program and Notification

Before manufacture commences, the contractor shall submit an outline of the proposed inspection and testing programmes (Quality Assurance Programme - QAP) for all major stages during manufacturing of major equipment. This inspection and testing programme shall include for the various items, the designation number, the kind of test, test standard and the extent of witness by the Owner/Engineer or third party.

The notification of the individual witness inspections made by the Owner/Engineer or the third party, shall be given by the contractor using facsimile or telex or e-mail in a format to be agreed upon. The contractor shall notify the Owner/Engineer within 21 days prior to the date on and the place at which item shall be ready for testing. If any postponement becomes necessary, the contractor shall provide written notification of same at least 72 hours prior to the originally scheduled date.

If the Owner/Engineer does not attend the test at the place and at the date which the contractor has stated in his notification, the contractor shall proceed with the test, which shall

be deemed to have been made in their presence and shall forthwith forward to them duly certified copies of the test readings.

Before erection commences, the contractor shall submit an outline of the proposed erection inspection and test programme during the erection of major systems. The individual testing procedure shall be submitted as progress of erection work of the equipment, systems and/or units, coordinated with relevant work of the complete plant.

Before commissioning commences, the contractor shall submit an outline of the proposed commissioning test procedure. The test programmes shall be maintained by the contractor during erection and commissioning.

1.3 Test : General

During manufacture, the Owner's representative shall have the right to expedite and/or inspect design, materials, workmanship and progress of manufacture of the contractor's and his sub-contractor's plant system equipment and may reject any defective materials considered unsuitable for the intended purpose or which does not comply with the intent of this specification. The contractor, upon any such rejection by the Owner or his representative, shall rectify or replace the defective or unsuitable material. The contractor shall provide every reasonable inspection facility to the Owner's inspector or representative at his own and his sub-contractor's works.

Material being furnished against this order shall only be shipped when factory inspection satisfactory to the Owner and/or his representative has been conducted. Such inspection and acceptance for shipment shall not however, relieve the contractor from entire responsibility for furnishing the plant system equipment conforming to the requirement of this specification nor shall prejudice any claim, right or privilege which the Owner may have, because of the use or supply of defective or unsatisfactory materials for the plant system equipment. Should the inspection be waived by the Owner, such waiver shall not also relieve the contractor in any way, from his entire obligations under this order.
The plant system equipment shall at factory or after installation be demonstrated capable of performing satisfactorily upto the contractor's guaranteed performance. All tests required by this specification, including retests and inspection, that may be necessary owing to failure to meet any tests specified, shall be made at the contractor's expense. Additional tests, as necessary, shall be made to locate any such failure and after determining the causes of failure and rectifying it, specified tests shall be repeated to establish that the rebuilt plant system equipment meets with the specification in every respect. Should the equipment ultimately fail to pass the tests specified, the Owner will have the option to reject the unit.

The bidder shall state in the proposal, the shop testing facilities available. Should full capacity testing equipment be not available, the bidder shall state the method proposed to be adopted with detailed computations and justification for adopting such a method to reliably ascertain the equipment characteristics corresponding to full capacity testing.

1.4 Test Certificate

In accordance with approved QCP, the results of the tests shall be certified by the Owner/Engineer or independent agency as applicable. As and when the item of the plant equipment has passed the tests, the Owner/Engineer shall furnish to the contractor a certificate in writing to that effect. The Quality Control Plan (QCP) shall be issued by the contractor within 1 months after NTP. Document files containing material certificates, test reports, etc shall be compiled for each QCP item of plant equipment; and shall be suitably identified (including equipment classification reference) and bound. Copies of compiled file shall be submitted as per distribution schedule

1.5 Tests at Manufacturers Works

The major equipment of the plant to be supplied under this contract shall be subjected to shop inspection and tests. After NTP, the contractor shall issue within 1 months a QCP indicating the kind and extent of inspection and tests to be carried out on the offered plant equipment components to prove whether the equipment fulfills the requirement of the contract in view of:

- Safety Conditions
- Consideration of the applied standards and regulations
- Execution of workmanship

SITE TESTS

Tests conducted at sites shall be indicated by bidder.

2.0 DEVIATIONS

Deviation from this specification, if any, shall be clearly brought out in the offer. Unless owner explicitly accepts such deviations, it shall be considered that the offer fully complies with the specification.

TECHNICAL SPECIFICATION

FOR

CABLE SEAL SOLUTION

Specification No- SP-GMS-01-R0

Prepared by	**Javed Ahmed**		**Rev: 1**
Reviewed by	**Abhinav Srivastava**		
Approved by	**Sheshadri Krishnapura**		**Date: 16th April 2022**

# #

Index

1.0 Scope
2.0 Basic Features
3.0 Service Conditions
4.0 System Design
5.0 Installation, Testing and Commissioning
6.0 Maintenance
7.0 Approved Makes.
8.0 Drawing and Data submission
9.0 Shipping
10.0 Handling and Storage
11.0 Quality
12.0 Deviation
13.0 Testing and Inspection
14.0 Training

1.0. SCOPE:

This specification covers design, engineering, manufacture, assembly, stage testing, inspection & testing before supply & delivery at site and installation testing and commissioning including handover the system to BRPL after successful execution of Cable Seal Solution
This Scope includes the following

a) Supply of Cable Seal System including its transportation to BRPL Site
b) Installation testing commissioning of Cable seal solutions with all the accessories including minor civil work if any.

2.0. Basic Features:

Following requirements shall be fulfilled and supported with valid test reports/certificates:

1. Minimum IP 65 Protection level Certificate for protection from Dust and Water.
2. Heat sink test report of Cable transit system.
3. Certificate/ Test Report for Protection from Rats and Rodents.
4. ATEX, PESO Approval for Explosive atmosphere.
5. NEMA Certificate as per UL 508A for the safety of Cabinets & Enclosures mandatory.
6. Material of Frame shall be of Stainless Steel.
7. System must have Bonding & grounding (Armour Earthing) feature as per IS 3043-1987 using a suitable Tin Plated Copper Braid to be used wherever required. It should be also tested for Impulse withstands as per IEC 62305-1 for minimum 50kA for 1 sec.
8. Manufacturer should have direct presence in India with all the after Sale & Service support from last 10 years.
9. Cable sealing system should have been tested for F- Rating Fire for 3 hrs as per UL 1479/ EN, Insulation and Integrity for 120 mins as mentioned in Indian National Building Code(EI 120) Certificate from BS 476 are mandatory.
10. Cable sealing system should have been tested for GAS tightness of 2.5 bar pressure.
11. EPDM modules in System must have Halogen content less than 200ppm with low smoke index-F1 Classification as per NF16-101 & NF16-102, Heat Radiation test in compliance with M2 classification, UV Ageing Test as per ISO-4892-2:2006 & ISO-815- 1:2008, Oxygen Index Test as per ASTM D 2863-00, Shock & Vibration Test as per NES 510.
12. System must have Bonding & grounding (ArmourEarthing) feature as per IS 3043-1987 using a suitable Tin Plated Copper Braid to be used wherever required. It should be also tested for Impulse withstand as per IEC 62305-1 for minimum 50kA for 1 sec.
13. Smoke Index shall be low. Type test reports for the same shall be provided by the supplier.
14. Shelf life of module - 25 Years
15. Solubility – Insoluble in water.

3.0. SERVICE CONDITIONS:

S.No	Particulars	Data
1	Design Ambient temperature	0°C to 50 °C
2	Seismic Condition	Zone IV as per IS 1893
3	Wind Pressure	195 kg/M² upto elevation of 30 M as per IS 875
4	Maximum Relative Humidity	100%
5	Maximum Altitude above Sea level	1000M
6	Rainfall	750mm (concentrated in 4 months)
7	Pollution level	Heavy/Dry
8	Average of no thunderstorm days	40 per annum

4.0. SYSTEM DESIGN

1. Modules with concentric peel able/removable layered multi-diameter cable sealing system consisting of frames, blocks and accessories shall be installed where the cables enter or leave any type of Electrical Panel/Cabinet/Transformer cable box.Each concentric module shall have a minimum of 10 mm range between smallest and largest adaptable diameter. System should be designed with minimum **+/-** 3 mm design margin. System should have provision for usable spares of 30**%** with no loose/ hanging / add layer / plug in type or to be stored components of modules / seals, each spare module should be concentric peelable/removable multi-diameter layered with complete range installed on Frame and solid Block are not acceptable..

2. It Shall cover following openings

For all Cable entry from outside to control room building and between room to room

5.0. MAINTENANCE

Bidder shall furnish a maintenance manual and support maintenance activity.

6.0. APPROVED MAKES

Roxtec, MCT Brattberg, UGA Systems

7.0. APPROVED MAKES

8.1	Submissions along with the bid	
8.1.1	Duly filled GTP and copy of	2 copies + 1 soft copy

	specification	

8.0. SHIPPING

9.1	Shipping	The bidder shall ascertain at an early date and definitely before the commencement of manufacture, any transport limitations such as weights, dimensions, road culverts, Overhead lines, free access etc. from the Manufacturing plant to the project site. Bidder shall furnish the confirmation that the proposed Packages can be safely transported, as normal or oversize packages, up to the site. Any modifications required in the infrastructure and cost thereof in this connection shall be brought to the notice of the Purchaser.
		The Bidder shall be responsible for all transit damage due to improper packing.

9.0. HANDLING AND STORAGE

10.0	Handling and Storage	Manufacturer instruction shall be followed. Detail handling & storage instruction sheet / manual needs to be furnished before commencement of supply.

10.0. QUALITY

11.1	Vendor quality plan	To be submitted for purchaser approval
11.2	Inspection points	To be mutually identified & agreed in quality plan

11.0. DEVIATION

12.1	Deviation	Deviations from this Specification shall be stated in writing with the tender by reference to the Specification clause/GTP/Drawing and a description of the alternative offer. In absence of such a statement, it will be assumed that

		the bidder complies fully with this specification. No deviation will be acceptable post order.

12.0. TESTING AND INSPECTION

Shall be as per latest relevant standards

13.0. TRAINING

Training on installation, commissioning, operation and maintenance shall be included in the proposal.

- at factory/site- 1 Manday

BSES Rajdhani Power Limited
BSES Bhawan, Nehru Place, New Delhi- 19

TECHNICAL SPECIFICATION

FOR

MISCELLANEOUS ACTIVITIES

Prepared by						**Rev: 0**
Reviewed by						**Date:**
Approved by						

Chapter 6b Technical Specification Misc Activities

1.0 SERVICE AFTER SALES

1.1 The bidder shall furnish in detail about his organization for rendering service after sales, covering deployment of personnel and supply of spares, for ensuring efficient operation and maintenance of the offered plant equipment. The details of spares and service facilities possessed by them should be elaborated.

1.2 The bidder shall guarantee furnishing of the following in respect of after sales services including spares:-

i) Providing services of his specialists on indent from the Owner for periodical or special maintenance of the plant; as well as for identifying sources of trouble, if any, reported and measures for immediate rectification.

ii) The bidder shall guarantee maintenance of adequate spares at his works to be supplied on indent from the Owner at short notice during the life of the plant.

2.0 BID DATA, DRAWINGS AND INFORMATION REQUIRED

2.1 Technical data sheets, drawings, schedules with supporting information incorporating the details in compliance to spec but not limited to the following shall be furnished along with the proposal:

2.2 Duly filled in 'Schedule of Guaranteed and other Technical Particulars Schedules ‘C’ except for data which cannot be finally furnished with the Bid. The Price and Delivery Schedule-B duly filled in.

2.3 Dimensioned outline drawings of the offered overall plant and separately for equipment including cross-sectional drawings showing dimensions, net weights, shipping weights and suggested arrangement layout of proposed plant & equipment with auxiliaries etc. Technical Literature/leaflets of the above plant equipment.

2.4 Manufacturers' catalogues showing the construction details of various equipments should be furnished indicating clearly the technical preference of the offered equipment over the specified equipment.

2.5 List of users of comparable plant equipment with the year in which the Diesel plant and other critical plant equipment was put actually into service. For technical acceptability of the bid, proven experience of the bidder in manufacture and satisfactory and trouble free performance of the critical plant equipment for at least three (3) years is essential for which the bidder shall furnish necessary documents in support of the above.

2.6 A bar chart of design, engineering, procurement, manufacture, testing, delivery, installation, commissioning and site testing including civil structural and architectural works of the proposed plant equipment.

2.7 Technical description of the proposed plant equipment and materials particularly outlining any additional list out features proposed for safety & reliability. List out items of work & services not included and which has to be provided by the Owner for satisfactory commissioning of the offered plant equipment supplied.

2.8 The bid shall not be considered if the bidder fails to submit all the details asked for. Proposal should be complete without ambiguity and should be clearly written against each item.

2.9 Bidder shall furnish Quality Assurance Programme for design, manufacture, assembly, erection, testing & commissioning including civil, structural and architectural works along with the proposal for all equipment covered under this specification whether manufactured by the bidder or procured from other sources.

2.10 Technical deviations from the specification, if any, shall be clearly listed in the Schedule-E. In absence of any deviation given in Schedule-E and accepted by Owner, it will be bidder's responsibility and his contractual obligation to supply the Plant equipment as per specification to Owner/Engineer's approval.

2.11 List of shop and site tests, the bidder proposes to carry out including those pertaining to their sub-suppliers works shall be clearly brought out in Schedule – G. In addition to above tests, the bidder shall conduct any other tests, to Owner/Engineer's approval, which are considered important for satisfactory operation of plant equipment.

2.12 Bidder shall furnish all required mandatory and startup commissioning spare parts as well as maintenance tools and tackles with unit prices for the offered plant equipment.

3.0 POST CONTRACT DATA AND DRAWINGS

3.1 The contractor shall submit within thirty (30) days from the date of the order and Notice to Proceed (NTP) certified dimensioned drawings and technical schedules giving every detail of the offered plant equipment particularly the following:

3.2 Completely filled in schedule of guaranteed particulars and other technical particulars.

3.3 Single line diagrams; logic diagrams, dimensioned general arrangement and equipment layout drawings showing front and side elevations, plan and sectional views of the offered equipment forming part of the contractor's supply; The drawings should also indicate structures & supporting details including foundation outline and loading data etc.

3.4 Final version of all drawings and data submitted along in the proposal mentioned above.

3.5 Structural, thermodynamic and pressure part calculations showing compliance with specifications and codes as and when required.

3.6 Any other drawings/details not specified herein and required by the Owner/Engineer to correctly coordinate the offered plant equipment with other contractor's work.

3.7 Civil design calculations.

3.8 Detailed specifications and data sheets of the plant equipment with auxiliaries.

3.9 Detail drawings of critical equipment units, assemblies, parts etc. as deemed necessary.

3.10 Design calculations of conductor sizing, cable sizing, main equipment sizing etc.

3.11 Schematic wiring diagrams along with write-ups for control, interlocks, instrumentation, protection, circuits. Terminal blocks and terminals arrangement drawings showing power & control cable connections.

3.12 Owner/Engineer will return to the contractor one (1) print of each drawing either.

(a) stamped approved or (b) marked up with the comments. In case of (a), no further submission of a drawing will be required. In case of (b), the contractor shall correct his original drawings to conform to comments made by the Owner/Engineer and resubmit within two (2) weeks of receipt of comments in the same manner as stated in the Distribution Schedule. The Owner/Engineer's approval shall not relieve the contractor from any of his obligation and responsibility to manufacture and supply equipment conforming to this specification, unless a written amendment to the specification is issued by the Owner.

3.13 After approval of the drawings, reproducible of each drawing shall be supplied. Final drawings shall be certified as Approved for Construction. Should any minor revision be made after approval the contractor shall re-distribute prints and reproducible as per the Distribution Schedule. Every revision shall be marked by a number, date and subject in a revision block provided in the drawing.

3.14 Reproducible shall be of quality to produce clear and legible prints and any inferior reproducible will be returned by the Owner for replacement with suitable reproducible. All reproducible shall be mailed rolled (not folded) on the outside of regular mailing tubes except for small sizes which can be mailed unfolded in envelope with a cardboard backing. The prints and reproducible shall be mailed in the most expeditious manner and shall be accompanied with a letter of transmittal.

4.0 INSTRUCTION MANUAL

4.1 At least one (1) month prior to the dispatch of the plant equipment, fifteen (15) copies of installation, testing and adjustments after installation, operation and maintenance manuals shall be furnished. These manuals shall be sturdily bound volumes and shall contain every drawings and information required for installation, testing, setting and adjustment of all components after installation, operation and maintenance of the equipment and all its components. Separate tabs shall be used for such instructions concerning each equipment control components, electrical and other accessories. The other data needed for servicing the components and ordering their spare parts.

4.2 Marked erection prints identifying the components parts of the equipment, as transported, with its assembly drawings.

4.3 Detailed dimensioned assembly and cross sectional drawings and description of all the plant system equipment with auxiliaries and drawings identifying all spare parts for re-order.

4.4 Documentation

Correspondence, drawings, progress reports, schedules, tests reports and instruction manuals shall be mailed in requisite copies in accordance with Distribution Schedule.

5.0 WORK SCHEDULE

5.1 Time being the essence of the proposal, preference will be given for the offers quoting earlier deliveries. The bidder shall include in his proposal his programme for furnishing and erecting the offered plant & equipment.

5.2 The programme shall be in the form of master network identifying the key phases in various areas of total plant work, such as design work, procurement of raw materials, manufacture of components & subassemblies; complete erection of equipment and all other field activities. The master network shall conform to completion of trial operation from the date of Letter of Award within a period of 4 months. The trial operations shall commence any day within 15 days prior to the date of completion indicated above.

5.3 This master network shall be discussed and agreed before the issue of letter of award. Engineering drawings as well as technical data sheets submission schedule shall also be discussed and finalized before the issue of letter of award. Provisions of the liquidated damages leviable for delays in completion of trial operation shall become effective after the above mentioned date.

5.4 After the contract award, the contractor shall plan the sequence of work of manufacture and erection including associated civil works to meet the Owner's power plant commissioning requirements; and shall ensure that all work/manufacture, shop testing, inspection & shipment of the equipment in accordance with the required construction/erection sequence.

5.5 Within seven (7) days of acceptance of the letter of award, the contractor shall submit, for review and approval, two copies (1 reproducible and 1 print) of Detailed Network schedules, based on the Master Network (mutually agreed by the Owner & contractor) to the Owner/Engineer showing the logic & duration of the activities in the following areas

i) Engineering, Procurement, Manufacturing & Supply Detailed engineering activities in regard to procurement of raw materials including bought out items, manufacture, dispatch/ shipment & receipt at site.

ii) Civil, Structural & Architectural Works:

Detailed engineering activities in regard to civil & structural works execution based on the offered equipment and approved drawings including detailed execution of execution activities covering the complete scope of work.

iii) Erection, Testing and Commissioning:

Detailed erection, testing and commissioning activities, covering the complete scope of work of the offered plant equipment coordinated with the civil and structural works executed.

5.6 Detailed Manufacturing Program

Detailed manufacturing PERT/PRIMAVERA programme for all the manufacturing activities of the offered plant equipment at contractor's/subcontractor's works shall be furnished within 7 days of letter of award.
The manufacturing network shall be supported by detailed procurement programme for critical bought out items/raw materials

Pre-erection Activity Programme
A) Manpower Deployment
B) Tools and plant mobilization plan
C) Detailed Site Mobilization Plan

5.7 Within a week of approval of the Network schedule, the contractor shall forward to the owner/Engineer copies of the Computer initial run data in an acceptable manner

5.8 The network shall be updated every month; or as frequency as possible to mutual agreement. Within seven (7) days following the monthly review, a progress meeting shall be held at the work (possible) wherein the major items of the plant or equipment are being produced. The meeting will be attended by the Owner/Engineer and responsible representatives of the contractor. The contractor shall be responsible for minuting the proceedings of the meeting, a report of which shall reach the Owner or the Owner/Engineer not later than 7 days following the meeting.

5.9 Access to the contractor's and/or sub-contractor's work shall be granted to the Owner/Engineer at all reasonable times for the purpose of ascertaining the progress

6.0 PROGRESS REPORTS

During execution of the contract either in manufacture or erection/commissioning, the contractor shall furnish monthly progress report to the Owner or the Owner/Engineer in a format as specified indicating the progress achieved during the month, and total progress upto the month as against scheduled and anticipated completion dates in respect of key phase of work or manufacture and shipment such as release of drawings for fabrication, procurement of raw materials, inspection and testing. If called for by the Owner/Engineer, the contractor shall also furnish to the Owner or the Owner/Engineer resources data in a specified format and time schedule. The contractor shall also furnish any other information necessary to ascertain progress if called for by the Owner/Engineer

Chapter 6b Technical Specification Misc Activities

7.0 DEVIATIONS

Deviation from this specification, if any, shall be clearly brought out in the offer. Unless owner explicitly accepts such deviations, it shall be considered that the offer fully complies with the specification.

BSES Rajdhani Power Limited
BSES Bhawan, Nehru Place, New Delhi- 19

TECHNICAL SPECIFICATION

FOR

STRUCTURAL WORK

Prepared by			**Rev: 0**
Reviewed by			**Date:**
Approved by			

Technical Specification Structural Work

1.0 GENERAL

1.1 The scope of specification covers design fabrication, proto assembly, supply and erection of galvanized steel structures for towers, girders, and equipment support structures, towers which shall be lattice type structures fabricated from structural steel conforming to IS: 2062(latest) The scope shall include supply and erection of all types of structures including bolts, nuts, washers, hangers, shackles, clamps, anti climbing devices, bird guards, step bolts, inserts in concrete, gusset plates equipment mounting bolts, structure earthing bolts, foundation bolts, spring and flat washers, fixing plates and any other items as required to complete the job.

1.2 The connection of all structures to their foundations shall be by base plates and embedded anchor/foundation bolts. All steel structures and anchor anchor/foundation bolts shall be galvanized. The weight of the zinc coating shall be at least 0.610 Kg/m2 for anchor bolts/foundation bolts and for structural members. One additional nut shall be provided below the base plate which may be used for the purpose of leveling.

2.0 DESIGN REQUIREMENTS FOR STRUCTURES

2.1 For design of steel structures loads such as dead loads, live loads, wind loads etc. shall be based on IS: 802 Part 1 Sec 1

2.2 For material and permissible stresses IS: 802, Part-1, Section-2 shall be followed in general. However additional requirements given in following paragraphs shall be also considered.

2.3 Minimum thickness of galvanized tower member shall be as follows:

Member	Minimum thickness (mm)
Leg members, ground wire Peak members/main members	5
Other members	4
Redundant members	4

2.4 Maximum slenderness ratios for leg members, other stressed members and redundant members for compression force shall be as per IS-802

2.5 Minimum distance from hole center to edge to adjacent hole shall be minimum 1.5 X bolt diameter. Minimum distance between center to center of holes shall be 2.5 x bolt diameter.

2.6 The minimum bolt diameter shall be 16 mm.

2.7 Step Bolts

In order to facilitate inspection and maintenance, the structures shall be provided with climbing devices. Each tower shall be provided with step bolts not less than 16mm diameter and 175mm long spaced not more than 450mm apart, staggered on faces on one leg extending from about 0.5M above ground level to the top of the tower. The step bolt shall conform to IS: 10238

2.8 Design Criteria

a) All structures be designed for the worst combination of dead loads, live loads, wind loads as per code IS 802 seismic forces as per code IS : 1893, importance factor of 1.5, loads due to deviation of conductor, load due to unbalanced tension in conductor, torsion load due to unbalanced vertical and horizontal forces, erection loads, short circuit forces shall be calculated considering a fault level of 31.5KA for 3 secs. IEC-865 may be followed for evaluation of short circuit forces.

b) Switchyard girders structure shall be designed for the two conditions i.e. normal condition and short circuit condition. In both conditions the design of all structures shall be based on the assumption that stringing is done only on one side i.e. all the three (phase) conductors broken on the other side. Factor of safety of 2.0 under normal conditions and 1.5 under short circuit condition shall be considered on all external loads for the design of switchyard structures, which are of lattice type.

c) Vertical load of half the span of conductors/string and the earth wires on either side of the beam shall be taken into account for the purpose of design. Weight of man with tools shall be considered as 150KGs for the design of structures.

d) Terminal / line take off girders shall be designed for a minimum conductor tension of 1000Kg per sub conductor per phase for 66KV. The distance between terminal girders and the dead end tower shall be taken as per standard. The design of these terminal girders shall also be checked considering +/- 30 deg deviation of conductor in both vertical and horizontal planes. For other girders the structural layout requirements shall be adopted in design.

e) The girders shall be connected with lattice columns be bolted joints.

f) All support structures used for supporting equipments shall be designed for the worst combination of dead loads, erection load. Wind load/seismic forces, short circuit forces. Short circuit forces shall be calculated considering a fault level of 31.5KA for 3 seconds.

g) Foundation bolts shall be designed for the loads for which the structures are designed

3.0 DESIGN DRAWINGS, BILL OF MATERIAL & DOCUMENTS

3.1 The contractor shall furnish design, drawing and BOMs to the Owner after award of the contract. However contractor shall have to prepare and submit any other drawings, bill of material additionally required during design and construction stage which the Owner feels necessary. In case Owner feels that any design drawing, BOM are to be modified even after its approval, contractor shall modify the design & drawings and resubmit the design drawing, BOM as required in the specification.

3.2 The fabrication drawings are to be provided and furnished by the contractor shall be based on design approved by Owner. These fabrication drawings shall be based on the design approved by the Owner. These fabrication drawings shall indicate complete details of fabrication and erection including all erection splicing details, lacing details, weld sizes and lengths. BOM in the Performa approved by the Owner shall be submitted. Bolt details and all customary details in accordance with standard structural engineering practice whether or not given by the Owner.

3.3 The fabrication work shall start only after the final approval to the design and drawings is accorded by the Owner. The design drawing should indicate not only profile, but section, numbers and sizes of bolts and details of typical joints.

3.4 Such approval shall however not relieve the contractor his responsibility for the safety of the structure and good connections and any loss or damage occurring due to defective fabrication design or workmanship shall be borne by the contractor.

4.0 FABRICATION OF STEEL MEMBERS

4.1 The fabrication and erection works shall be carried out generally in accordance with IS 802. A reference however may be made to IS 800 in case of non-stipulation of some particular provision in IS 802. All materials shall be completely shop fabricated and finished with proper connection material and erection marks for ready assembly in the field.

5.0 PROTO – ASSEMBLY

5.1 The component parts shall be assembled in such a manner that are neither twisted not otherwise damaged and shall be so prepared that the specific camber, if any, is provided. In order to minimize distortion in member the component parts shall be positioned by using the clamps, Clips, lugs, jigs and other suitable means and fasteners (bolts and weld) shall be placed in a balanced pattern. If the individual components are to be bolted, paralleled and tapered drifts shall be used to align the part so that the bolts can be accurately positioned.

5.2 Sample towers, beams and lightning masts and equipment structures shall be trial assembled in the fabrication shop and shall be inspected and cleared by contractor based on the design approval accorded by the Owner before mass fabrication.

5.3 Pursuant to above the BOM's along with proto-corrected fabrication drawing shall be prepared and submitted by the main vendor to Owner as document for information. Such BOM, which shall be the basis for the Owner to carry out inspection.

6.0 BOLTING

6.1 Every bolt shall be provided with two flat and one spring washer under the nut so that no part of the threaded portion of the bolt is within the thickness of the parts bolted together. Locking nut shall be provided with each grouting bolt.

6.2 All steel items, bolts, nuts and washers shall be hot dip galvanized.

6.3 2.0% extra nuts and bolts shall be supplied for erection.

7.0 WELDING

7.1 The work shall be done as per approved fabrication drawings, which clearly indicate various details of joints to be welded, type of weld, length and size of weld, whether shop or site weld etc. Symbols for welding on erection and shop drawings shall be according to IS 813. Efforts shall be made to reduce site welding so as to avoid improper joints due to constructional difficulties.

8.0 FOUNDATION BOLTS

8.1 Foundation bolts for the towers and equipment supporting structures and elsewhere shall be embedded in first stage concrete while the foundation is cast. The contractor shall ensure the proper alignment of these bolts to match the holes in the base plate.

8.2 The contractor shall be responsible for the correct alignment and leveling of all steel work on site to ensure that the towers/structures are plumb.

8.3 All foundation bolts for lattice structures are to be supplied by the contractor.

8.4 All foundation bolts shall be fully galvanized so as to achieve 0.610 kg. Per Sq.m. of Zinc coating as per specifications.

8.5 All foundation bolts shall conform to IS 5624 but the material shall be MS conforming to IS 2062.

9.0 STABILITY OF STRUCTURES

The method of grouting the column bases shall be subject to approval of Owner and shall be such as to ensure complete uniformity of contact over the whole area of the steel base. The contractor will be fully responsible for the grouting operations.

10.0 GROUTING

The method of grouting the column bases shall be subject to approval of Owner and shall be such as to ensure complete uniformity of contact over the whole area of the steel base. The contractor will be fully responsible for the grouting operations.

11.0 GALVANISING

11.1 All structural steel works and support shall be galvanized after fabrication.

11.2 Zinc required for galvanizing shall have to be arranged by the manufacturer. Purity of zinc to be used shall be 99.95% as per IS 209.

11.3 The contractor shall be required to make arrangement for frequent inspection by the Owner as well as continuous inspection by a resident representative of the Owner, if so desired for fabrication work.

12.0 TOUCH UP PAINTING

The touch up primers and paint shall consist of Zinc phosphate / Zinc chromate conforming to the requirements of IS 2074 with a pigment to be specified by the Owner.

13.0 INSPECTION BEFORE DESPATCH

13.1 Each part of the fabricated steel work shall be inspected as per approved quality plans and certified by the Owner or his authorized representative as satisfactory before it is dispatched to the erection site.

13.2 Such certification shall not relieve the contractor of his responsibility regarding adequacy and completeness of fabrication.

14.0 TEST CERTIFICATE

Copies of all test certificates relating to material by the contractor for the works shall be forwarded to the Owner.

15.0 ERECTION

The contractor should arrange on his own all plant and equipment, welding set, tools and tackles, scaffolding, trestles equipments and all other accessories and ancillaries required for carrying out erection without causing any stresses in the members which may cause deformation and permanent damage.

16.0 SAFETY & PRECAUTION

The contractor shall strictly follow at all fabrication, transportation and erection of steel structures, raw m, materials and other tools and tackles, the stipulations contained in Indian standard code for safety during erection of structural steel work.

17.0 DEVIATIONS

Deviation from this specification, if any, shall be clearly brought out in the offer. Unless owner explicitly accepts such deviations, it shall be considered that the offer fully complies with the specification.

BSES Rajdhani Power Limited
BSES Bhawan, Nehru Place, New Delhi- 19

TECHNICAL SPECIFICATION

FOR

OUTDOOR SWITCHYARD MATERIAL

Prepared by					**Rev: 1**
Reviewed by					**Date:**
Approved by					

Technical Specification Outdoor Switchyard Material

1.0 INTENT OF SPECIFICATION

1.1 This specification is intended to cover the design, manufacture, assembly, testing at manufacturer's works, supply & delivery, properly packed for transport F.O.R site of 66KV Outdoor Switchyard Material and Hardware complete with all accessories for efficient and trouble free operation.

1.2 In the event of any discrepancy between listed documents, the stipulation of this specification shall govern.

1.3 The specification shall be read and constructed in conjunction with other sections of bidding document.

2.0 SCOPE OF WORK

2.1 **Scope of Supply**

Type, rating, connections etc. of the materials shall be as detailed in the drawings and annexure. The materials shall be furnished in strict compliance with the same.

2.2 Following materials and hardware's are to be furnished:

a) ACSR ZEBRA Conductor
b) Disc Insulator & Post Insulators
c) Conductor Spacers, Clamps, Connectors.

Any material or accessory, which may not have been specifically mentioned but which is usual and / or necessary shall be supplied free of cost to the Owner.

PG Clamps for ACSR Conductors shall not be acceptable. However, C-Wedge Connector can be offered in place of PG Clamp.

3.0 GENERAL REQUIREMENTS

3.1 **Codes and Standards**

i) All equipment and materials shall be designed, manufactured and tested in accordance with the latest applicable Indian Standards (IS) & IEC Standard except where modified and / or supplemented by this specification.

ii) Equipment and material conforming to any other standard, which ensures equal or better quality, may be accepted. In such cases, copies of the English version of the standard adopted shall be submitted along with the bid.

iii) The electrical installation shall meet the requirements of Indian Electricity Rules as amended upto date and relevant IS Codes of Practice. In addition other rules or regulations applicable to the work followed. In case of any discrepancy, the more restrictive rule shall be binding.

4.0 DESIGN CRITERIA

4.1 All the ACSR conductors, disc and string insulators, clamps & connectors, hardware's etc. will be used in extra high voltage system having characteristics as listed in the annexure.

4.2 All equipments, conductors, hardware's, insulators & clamps etc. will be installed outdoor in a hot, humid & tropical atmosphere.

4.3 The maximum temperature in any part of the clamps, connectors, conductors etc at specified rating shall not exceed the permissible limit as stipulated in the relevant standards.

4.4 All equipments, conductors, clamps, connectors, insulators etc shall be capable of withstanding the dynamic & thermal stresses of maximum short circuit current without any damages or deterioration.

4.5 In order to avoid concentration of stresses, all sharp edges of clamps, connectors etc. shall be rounded off.

4.6 Bi-metallic connectors shall be used for any connection between dissimilar materials.

5.0 SPECIFIC REQUIREMENT

5.1 Equipment & Materials

i) Equipment & material shall comply with description, rating etc. as detailed in this specification and annexure.

ii) All accessories, fittings, supports, bolts etc. which form part of the equipment or which are necessary for safe and satisfactory installation and operation of the equipment shall be furnished.

iii) All parts shall be made accurately to standard gauges so as to facilitate replacement and repair. All corresponding parts of similar equipment shall be interchangeable.

iv) After the treatment of steel surfaces damaged during transit sufficient quantity of anti-corrosive paint shall be applied and subsequently finished with two coats of final paint of approved shade.

5.2 ACSR Conductor

i) The Aluminum Standard conductor and steel reinforced shall have the technical parameters matching with the requirements given in Annexure. ACSR conductors shall conform to the latest revision of IS-398.

ii) The material for ACSR conductor shall conform to the following:

Aluminum

The Aluminum strands shall be hard drawn from electrolytic Aluminium rods having purity not less than 99.5% and a copper content not exceeding 0.04%.

Steel

The steel wire strands shall be drawn from high carbon steel wire rods and shall conform to the following chemical composition:

Element -% Composition

Carbon - 0.50 to 0.85 Manganese - 0.50 to 1.10 Phosphorous -not more than 0.035 Sulphur -not more than 0.045 Silicon - 0.10 to 0.35

Zinc

The zinc used for galvanizing shall be electrolytic High Grade Zinc of 99.95% purity. It shall conform to and satisfy all the requirements of IS: 209-1979.

5.3 Clamps and connectors

i) All clamps, connectors and hardware's shall be designed manufactured and tested as per relevant standards.

ii) All clamps & connectors for connection with ACSR conductors shall have high tensile Aluminum alloy grade A6 body. U- Bolt and nut for the clamp shall be made of non-magnetic material e.g. chromium steel.

iii) Bolt, nut, washer, shackle etc. required for other purpose shall be of forged steel with adequate strength and the surface shall be so protected as to offer maximum resistance to corrosion. Malleable iron wherever used for any part shall be of best quality and shall correspond to latest amendments of relevant IS.

iv) Various fittings & accessories of the clamps & connectors shall be so designed as to eliminate sharp edges & maintain bright smooth surface. All bolts, nuts, rivets etc. shall have round profiles.

5.4 Disc Insulator

i) All disc insulators shall be dimensioned appropriately so as to have the required Electro- Mechanical strength for EHV outdoor duties.

ii) Suspension and tension insulators shall be wet process porcelain with ball and socket connection. Glazing of the porcelain shall be uniform brown colour, free from blisters, burrs and other similar defects. Insulators shall be interchangeable and shall be suitable for forming either suspension or strain strings. Each insulator shall have rated strength markings on porcelain printed and applied before firing.

iii) When operating at normal rated voltage there shall be no electric discharge between conductor and insulator which would cause corrosion or injury to conductors or insulators by the formation of substances due to chemical action. No radio interference shall be caused when operating at normal rated voltage.

iv) Insulating shall be co-ordinated with basis impulse level of the system. The creepage distance shall correspond to very heavily polluted atmosphere (31mm/KV)

v) Porcelain used in insulator manufacture shall be homogeneous, free from lamination, cavities and other flaws or imperfection that might affect the mechanical or dielectric quality and shall be thoroughly vitrified, tough and impervious to moisture.

vi) The design of the insulator shall be such that stresses due to expansion and contraction in any part of the insulator shall not lead to deterioration. All ferrous parts shall be hot dip galvanized in accordance with the latest edition of IS: 209. The zinc coating shall be uniform, adherent, smooth, reasonably bright, continuous and free from imperfection such as flux, ash, rust stains bulky white deposits and blisters.

vii) Bidder shall make available data on the essential features of design including the method of assembly of discs and metal parts, number of discs per insulators, the manner in which mechanical stresses are transmitted through discs to adjacent parts, provision for meeting expansion stresses, results of corona and thermal shock tests, recommended working strength and any special design or arrangement employed to increase life under service conditions.

viii) Insulator hardware shall be of forged steel. Malleable cast iron shall not be accepted except for insulator disc cap. The surface of hardware must be clean, smooth, without cuts, abrasion or projections. No part shall be subjected to excessive localized pressure. The metal parts shall not produce any noise generating corona under operating conditions.

ix) The insulator hardware assembly and clamps shall be designed for 120KN Tensile load. The clamps shall be designed for 700 Kg tensile load. Earth wire tension clamp shall be designed for 1000 Kg tensile load with a factor of safety of two (2).

x) The tension string assemblies shall be supplied along with suitable turn buckle.

6.0 TESTS

6.1 Routine Tests

i) During manufacture and on completion of all equipment, conductors, insulators, clamps, connectors and accessories shall be routine tested as per applicable standards at manufacture's works.

ii) The suspension and tension strings, insulator discs and hardware shall be subjected to the following, acceptance tests and routine tests:

a) Visual examination
b) Verification of Dimensions as per Cl no. 10.5 of IS: 731
c) Temperature cycle test as per Cl no. 10.6 of IS: 731
d) Puncture test as per Cl no. 10.10 of IS: 731
e) Galvanizing test as per Cl no. 10.12 of IS: 731
f) Mechanical performance test as per IEC-575 Cl. 4
g) Test on locking device for ball & socket coupling as per IEC-372 (2)
h) Porosity test as per Cl no. 10.11 of IS: 731

Acceptance Tests

a) Visual examination as per Cl. 5.10 Of IS: 2468 (Part-1)
b) Verification of Dimensions as per Cl. 5.8 Of IS: 2468 (Part-1)
c) Galvanizing / Electroplating test as per Cl. 5.9 Of IS: 2468 (Part-1)
d) Slip strength test as per Cl. 5.4 Of IS: 2468 (Part-1)
e) Shore hardness test for the Elastomer (if applicable as per the value guaranteed by the Bidder)
f) Mechanical strength test for each component (including grading rings and arcing horns).
g) Test on locking devices for ball and socket coupling as per IEC: 372 (2)

Routine Tests on Disc Insulator / Long rod Insulator

a) Visual Inspection as per Cl No. 10.13 of IS: 731
b) Mechanical Routine Test as per Cl No. 10.14 of IS: 731
c) Electrical Routine Test as per Cl No. 10.15 of IS: 731

Routine Tests on Hardware Fittings

a) Visual examination as per Cl. 5.10 Of IS: 2468 (Part-1)
b) Mechanical strength Test as per Cl. 5.11 Of IS: 2468 (Part-1)

Test during manufacture on all components as applicable on Disc Insulator

a) Chemical analysis of zinc used for galvanizing:

Samples taken from the zinc ingot shall be chemically analyzed as per IS: 209. The purity of zinc shall not be less than 99.95%.

b) Chemical analysis, mechanical hardness tests and magnetic particle inspection for malleable casting:

The chemical analysis, hardness tests and magnetic particle inspection for malleable casting will be as per the internationally recognized procedure for these tests. The sampling will be based on heat number and heat treatment batch

Test during manufacture on all components as applicable on hardware fittings

a) Chemical analysis of zinc used for galvanizing

Samples taken from the zinc ingot shall be chemically analyzed as per IS: 209. The purity of zinc shall not be less than 99.95%.

b) Chemical analysis, mechanical hardness tests and magnetic particle inspection for malleable casting:

The chemical analysis, hardness tests and magnetic particle inspection for malleable casting will be as per the internationally recognized procedure for these tests. The sampling will be based on heat number and heat treatment batch

c) Chemical analysis, mechanical hardness tests and magnetic particle inspection for fabricated hardware.

The chemical analysis, hardness tests and magnetic particle inspection for fabricated hardware will be as per the internationally recognized procedure for these tests. The sampling will be based on heat number and heat treatment batch.

iii) The following, acceptance & routine tests and tests during manufacturing shall be carried out on the conductor.

Acceptance Tests

a)	Visual check for joints, scratches etc. and length of conductor	
b)	Dimensional check on steel and Aluminum strands	
c)	Check for lay ratio of various layers	
d)	Galvanizing test on steel strands	

e)	Torsion and Elongation test on steel strands	
f)	Breaking load test on steel and Aluminum strands	
g)	Wrap test on steel and Aluminum strands	IS: 398(Part-V) 1982 Clauses 12.5.2, 12.7 & 12.8
h)	DC resistance test on Aluminum strands	
i)	UTS test on welded joint of Aluminum strands	

NOTE: All the above tests except test mentioned at (i) shall be carried out on Aluminum and steel strands after stranding only

Routine Tests

a) Check to ensure that the joints are as per specification
b) Check that there are no cuts, fins etc. on the strands

iv) The following type, routine & acceptance tests and tests during manufacturing shall be carried out on the earth wire.

Acceptance Tests

a) Visual check for joints, scratches etc. and length of Earth wire
b) Dimensional check
c) Galvanizing test
d) Lay length check
e) Torsion test
f) Elongation test
g) Wrap test
h) DC resistance test : IS: 398 (Part lll) 1976
i) Breaking load test
j) Chemical Analysis of steel

Routine Tests

a) Check that there are no cuts, fins etc. on the strands.
b) Check for correctness of stranding

6.2 **Type Test**

Test certificates for type tests shall be from CPRI/ERDA/NABL approved lab, as stipulated in Indian Standards carried out on similar equipment shall be furnished. If test certificate for any of the type test is not available, the same shall be carried out free of cost from CPRI/ERDA/NABL.

6.3 **Test Witness**

Tests shall be performed in presence of Owner's representative if so desired by the Owner. The contractor shall give at least fifteen (15) days advance notice of the date when the tests are to be carried out.

6.4 **Test Certificates**

i) Certified copies of all tests carried out at works shall be furnished in requisite no. of copies as stated in the condition of contract for approval of the Owner. The certificates shall furnish complete identification, date including serial number of each material and accessory.

ii) Equipment shall be dispatched from works only after receipt of Owner's written approval of shop test reports.

iii) Type test certificate on any equipment, if so desired by the Owner, shall be furnished. Otherwise, the equipment shall have to be type tested, free of charge, to prove the design.

7.0 SPARES

The Bidder shall submit a list of recommended spare parts for three (3) years of satisfactory and trouble free operation, indicating itemized price of each item of the spares.

8.0 DRAWING & DOCUMENTS TO BE FURNISHED

8.1 **To be submitted with each copy of the Bid**

i) Typical general arrangement drawing of the equipment / items.
ii) Technical leaflets on equipment / items expending constructional features.
iii) Type test certificates on similar equipment / items.

8.2 **To be submitted for Approval and Distribution**

i) Dimensional general arrangement drawing showing disposition of various fittings for equipment, accessories, components etc.
ii) Assembly drawing for erection at site with part numbers and schedule of materials.
iii) Type & Routine test certificates
iv) Technical leaflets on equipment / items
v) Back-up calculation for:

a) Selection of equipment / material ratings.
b) Sag-Tension of ACSR.
c) Lighting protection system
d) Selection of rigid bus support spacing.

vi) Any other relevant drawing, documents, calculations and data necessary for satisfactory installation, operation and maintenance.

9.0 DEVIATIONS

Deviation from this specification, if any, shall be clearly brought out in the offer. Unless owner explicitly accepts such deviations, it shall be considered that the offer fully complies with the specification.

Technical Specification Outdoor Switchyard Material

RATINGS & REQUIREMENTS

1.0	**CONDUCTORS**	
1.1	**ACSR Conductor**	
1.1.1	Reference standard :	IS 398
1.1.2	Code Name :	ZEBRA
1.1.3	Type :	ACSR
1.1.4	Overall diameter	28.62mm
1.1.5	Stranding no. of wire and diameter :	54/3.18 (Al) 7/3.18 (St)
	Number of strands Core	1
	1st Layer	6
	2nd Layer	12
	3rd Layer	18
	4th Layer	24
1.1.6	Sectional area of Aluminum :	428.9 sq.mm
1.1.7	Total Sectional area :	484.5 sq.mm
1.1.9	Ultimate Strength (min) :	130.32 KN
1.1.10	Calculated DC resistance at 20 Deg C :	0.06868 ohm/Km

NOTE – The 66KV Main Bus Shall be with TWIN ZEBRA. The equipment bay shall be Single Zebra.

2.0	**GALVANISED STEEL SHIELD WIRE**	
2.1	Reference standard :	IS 398
2.2.	Number of strands	Steel core-1, outer Steel layer-6
2.3	Total sectional area	54.55 sq.mm
2.4	Overall diameter	9.45 mm
2.5	Approximate weight	428 kg/km
2.6	Calculated DC. resistance at 200C	3.37 ohms/km
2.7	Minimum ultimate tensile strength	56 KN
2.8	Direction of lay of outer layer	Right hand
2.9	Minimum tensile strength	110 Kgf/mm2
3.0	**CONNECTORS / CLAMP ASSEMBLY / SPACER**	
3.1	Reference standard :	
3.1.1	Clamp / Connector	IS 5561
3.1.2	Spacer	IS 10162
3.2	Material	Aluminum Alloy A6
3.3	Continuous current carrying capacity (r.m.s) at 50deg C ambient temp.	2000A (min)
3.4	Short time current carrying capacity	31.5KA for 3 sec
3.5	Maximum temperature rise over Ambient of 50	35 deg C

	deg C	
4.0	**INSULATORS**	
4.1	Reference standard	
4.1.1	String Insulators/Insulator fittings	IS 731/ IS 2486
4.1.2	Post Insulators	IS 2544
4.2	Type	Post Insulator-
	Cylindrical solid	
	Core type,	
	Suspension &	
	Tension Insulator	
4.3	Service	Outdoor
4.4	System details	
4.4.1	Voltage	66/72.5KV (Nom/Max)
4.4.2	Nos. of phases	3
4.4.3	Frequency	50Hz
4.4.4	System neutral earthing	Effectively earthed
4.5	Insulation Level	
4.5.1	Dry power frequency withstand	140KV r.m.s
4.5.2	Wet power frequency withstands	140KV r.m.s
4.6	Impulse withstand	325KV
4.7	Creepage	31mm/KV

Bus Post Insulators shall have minimum cantilever strength of 800Kg and minimum torsion moment of 500 Kg.

FITTINGS AND ACCESSORIES OF INSULATORS

Each insulator shall be furnished complete with the fittings and accessories as listed below according to requirement

1. Suspension top fitting
2. Suspension clamp fitting
3. Conductor suspension clamp
4. Tension end fitting
5. Tension (anchor) clamp adopter
6. Conductor tension (anchor) clamp
7. Top metal fitting
8. Bottom metal fitting
9. Nuts, Cotter pin, security clips etc.
10. Forged pin, studs etc.

Other standard accessories which are not specifically mentioned but usually provided with insulator of such type and rating for efficient and trouble free operation.

TECHNICAL SPECIFICATION OF IT DEVICES FOR GRID COMMUNICATION

DOCUMENT NO.: BRPL-IT-SCADA-0002

Rev.: 02

BSES Rajdhani Power Limited

BSES RAJDHANI POWER LIMITED
BSES Bhawan, Nehru Place,
New Delhi - 1100049

DOCUMENT CONTROL SHEET

DOCUMENT : TECHNICAL SPECIFICATION OF IT DEVICES FOR GRID COMMUNICATION

DOCUMENT NO. : BRPL-IT-SCADA-002

REV. NO. : 02

ENDORSEMENT

02	19.07.2024	3rd	Sonia Mittal (AM-CES EHV)	Abhinav Srivastava HOD – CES EHV
01	02.01.2023	2nd	Suman Kumar (Asst. V.P.)	Bhuwanesh Dwivedi HOD – SCADA
00	05.02.2019	1st	Suman Kumar (GM-IT)	Mrityunjay Kumar (HOD-IT)
			Prepared by	Approved By
			BSES Rajdhani Power Limited	

(This document is a property of BSES Rajdhani Power Limited. This is not transferable and shall not be used for any purpose other than for which it is issued)

Contents

Sr. No.	Clause No.	Description	Page no.
1.	1.0	INTENT OF SPECIFICATION	4
2.	2.0	SCOPE OF SUPPLY AND SERVICES	5
3.	2.1	IT RACK ROOM REQUIREMENT	5
4.	2.2	POWER SUPPLY REQUIREMENTS	5
5.	2.3	EARTHING REQUIREMENTS	5
6.	2.4	IT RACK SPECIFICATION	6
7.	2.5	IT DEVICES	7
8.	3.0	TERMINAL POINTS	7
9.	4.0	EXCLUSIONS	7
10.	5.0	BILL OF QUANTITY AND VENDOR LIST OF EACH ITEM PER RACK FOR EACH GRID	8

POINTS TO BE CONSIDERED DURING DESIGNING OF NEW GRID

1.0 INTENT OF SPECIFICATION

1.1 Tender Specification is intended to cover design, engineering, manufacture, assembly, inspection, shop testing, supply, packing, forwarding to site, unloading, storage and preservation, handling at site, insurance, erection & supervision of erection, pre–commissioning, testing & commissioning, completion of facilities, conducting reliability run tests and performance guarantee tests and handing over the complete IT system to IT department of BSES Rajdhani power limited.

The scope shall also cover the following activities and services in respect of all the equipment and works specified in various sections of this specification.

a) Basic engineering of all equipment and equipment systems.

b) Detailed design of all the equipment and equipment system(s).

c) Providing engineering drawings, data, instruction manuals, as built drawings and other information for owner's review, approval and records.

d) Compliance with statutory requirements and obtaining clearances from statutory authorities, wherever required.

e) Complete manufacturing including shop testing.

f) Packing and transportation from the manufacturer's works to the site including customs clearance, port charges, if any.

g) Receipt, movement to proper storage, storage, preservation and conservation of equipment at the site, movement from storage area to interim/ final foundation location.

h) Supply of spares as per specified list.

i) All items and equipment though not specifically mentioned in the specification, but needed to complete the system to meet the intent of the specification shall be deemed to be included in the scope of the bidder.

It is not the intent to completely specify all details of design and construction, but only to lay down broad sizing and quality criteria for the major equipment and systems and it is expected that the equipments shall conform in all respects to high standards of engineering, design and workmanship and shall be capable of performing in continuous commercial operation up to the contractor's guarantee in a specified manner acceptable to the owner.

2.0 SCOPE OF SUPPLY AND SERVICES

The scope of supply and services shall be complete but not limited to the following:

2.1 IT RACK ROOM REQUIREMENT

2.1.1 Air conditioned room shall be provided for proper functioning of all IT devices. The temperature shall be maintained to 22^0 to 24^0 C

2.1.2 Room size shall be minimum as –

a) Length – 3.5 mtrs
b) Width – 2.5 mtrs.
c) Height – 3 mtrs.

2.1.3 Cable trench/ duct – 200mm wide cable trench/ duct shall be provided below the finished floor for proper routing of cables up to IT rack. 100mm size conduit shall be provided for cable entry from outside of the building to inside cable trench/ duct. The cable trench / duct shall be connected to nearest DCDB for proper power cable routing up to IT rack.

2.1.4 Room door width shall be minimum 4 ft. wide for ease of rack entry and height shall be as per standard norms. Door shall have locking arrangement.

2.1.5 Room's front side shall be provided with glass partition to have the clear view of IT rack from outside the room.

2.1.6 Towers (2nos.) for communication link shall be installed at the roof of the building. The area required for base of the tower shall be 5 ft X 5 ft and the tower load shall be maximum 250 kg. Link shall be delivered by Airtel/ Jio /Sify ISPs.

- ISP based MPLS - 2 Mbps each from Two Vendor for SCADA
- ISP based MPLS 4 Mbps for CCTV survilance

These links delivery shall be directly taken care by owner. Bidder to provide the suitable platform as motioned in the clause for tower erection.

2.2 POWER SUPPLY REQUIREMENTS

2.2.1 Required power supply for communication devices inside the IT rack shall be provided. Two numbers 48V DC power through suitable MCB shall be provided for owner's use in the IT rack this power supply shall be used for communication link's POE devices.

2.2.2 All internal wiring of rack for various ratings of power supply required by other devices i.e switch, routers, cooling fan, light etc shall be provided.

2.2.2 All communication equipments/ devices inside the IT rack shall be on DC power supply.

2.3 EARTHING REQUIREMENTS

2.3.1 Dedicated electronic earthing shall be provided for IT rack and their devices. The earth pit resistance should be between 0.6 ohm to 1 ohm.

2.3.2 Electronic Earthing cable from earth pit to IT rack shall be of minimum 16 sq.mm multi stranded copper cable PVC insulated and internal devices shall be done with minimum of 06 sq.mm multi stranded copper cable PVC insulated.

2.4 IT RACK SPECIFICATION

2.4.1 The design of IT rack and layout of all equipment, terminal blocks etc. shall be based on human engineering considerations, fully keeping in view the convenience of operation and maintenance personnel and shall be subject to Owner's approval during detailed engineering.

2.4.2 Rack shall be free standing/ wall mounting type and have bottom entry for cables to be decided application wise during detailed engineering. The bottom of rack shall be sealed with bottom plate, double compression cable glands and fire proof sealing material to prevent ingress of dust and propagation of fire.

2.4.3 Rack size shall be 12U/15U and made of CRCA sheet with 1.6 mm thickness. The rack shall be of front and back opening with 2 mm thick door frame. Front and back door shall have full length of 3 mm thick glass panel for clear view of inside equipments. Cable gland plate shall be detachable type and of 2mm thickness. Door hinges and locks shall be as per manufacturer standards. Special key type locks are not acceptable. Rack colour shade shall be powder coated RAL 7035.

2.4.4 Two nos. adjustable height tray shall be provided in the rack for routers and ISP devices.

2.4.5 Following are the minimum equipment/ accessories shall be provided in the rack however same shall be decided during detail engineering –

1. DC Power supply converter -

   i) Input source – 48V DC / 220V DC – 1 no. (input supply depends on grid voltage range)

   ii) Output – 12V DC - 2 nos., 48VDC – 2 nos.(for owners use-ISPs), 48V DC/ required supply for router – 1 no. and spare – 1 no.

   iii) Input and output connection shall be of terminal type.

   iv) Input terminals - suitable for 2.5 sq.mm cable

   v) Output terminals - suitable for 1.5 sq.mm cable

2. AC power supply extension board -

   i) Input source – 230V AC – 1 no.

   ii) Output sockets with switch – 230V AC – 5 nos.

3. Rack Fan and filter – size 6"

4. MCB and Terminal blocks – MCB DP type and terminals shall be mounted on DIN rail. Minimum four nos. MCB shall be provided in the rack. One no. for 48 V DC (10A), one no. for 230V AC (10A) and one no. of each rating shall be kept as spare. Terminal blocks shall be fused type and suitable to respective voltage rating and intended cable size mentioned elsewhere in the specification.

2.4.6 All inter panel wiring shall be with FRLS type wires with proper routing inside the cable alley. Cross ferruling shall be provided for easy identification of wires. Cable shall have proper cable tagging.

2.4.7 Panel name plate shall be provided at top portion of front and back doors. It shall be engraved type and made of acrylic plate.

2.5 IT devices

2.5.1 Router – It shall be of industrial grade type. It shall be with 5 years comprehensive warrantee. Brief technical specification is as follows –

a) Make – CISCO / RAD / Fortinet.
b) 2 FO Ports for ISP with Ethernet RJ-45 Convertor
c) 4/6 LAN Ports 100/1000 Mbps
d) Dual Power Supply (DC-DC/ DC-AC) with auto switching
e) 4g/5G SIM based with antenna
f) Built in GPS
g) IP20/40 compliance
h) Industrial Grade - No Fan ,Temperature range upto 70 degree celcius
i) RS-232serial , USB port /ports
j) Supports BGP,OSPF,RIP for MPLS and SDH
k) NMS Monitoring enabled SNMP,Netflow
l) IEC-104 protocol enabled and OT protocol Support
m) 5 Year Onsite warranty with Patch Management and replacement

2.5.2 Switch – Industrial Grade, No Fan, Temp should support upto 70 degree celcius

a) Make – Cisco/Procomm/Siemens
b) 8/16/24 ports, L2 managable
b) Managable and Routed protocol support
c) SNMPV3 support with IP based monitoring. Switch shall be provided with all mounting accessories.

2.5.3 Fiber Device and Cable- LIU 48 Ports *2 , Optical Single mode media convertor *4(DC) , Opical Fiber cable and cable accessories as per requirement Make – D-link .Comspec

The detailed technical specification shall be finalized during detail engineering.

3.0 Terminal Points

3.1 Power supply – From PDB/ DCDB to IT rack including cable supply, erection and termination at both end (PDB/ DCDB and IT rack). PDB/ DCDB details shall be part of Electrical section of technical specification

3.2 LAN cabling – From RTU to IT rack router including CAT 6 cable (armour type) supply, erection and termination at both end (RTU and IT rack). This communication cable shall be of redundant cables.

3.3 SCADA Communication link – Shall be provided by respective ISP upto router WAN ports.

4.0 Exclusions –

4.1 Communication tower/ pole and link.

5.0 Bill of Quantity and vendor list of each item per rack for each grid –

Sr. No.	Item Description	Make / Model No.	Quantity (in nos.)
1	Rack – 12U	Rittal /Pyrotech/Netrack/APC	01
2	Router – Industrial grade	CISCO/ RAD/ Fortinet	01
3	Switch	Cisco/Procomm/Siemens	01
4	Power Supply converter	Meanwell/ Phoenix	01
5	MCB	Havells / Legrand	04
6	Terminal blocks – fused type	Wago/ phoenix	1 lot
7	AC extension board	Havells / Anchor	1
8	Wires for Internal wiring	RR cable, Finolex, Havells	1 lot
9	Spare Terminal blocks with fuses (mounted in the rack)	Wago/ phoenix	20%
10	Terminal fuses of each rating (loose supply)		20%

Technical Specification for

Grid Meters

Specification no – BSES-TS-142-GEM-R0

Rev		**0**
Date		**April 13, 2023**
Prepared BY	Ashish Joshi	
Reviewed BY	Puneet Duggal	
	Vikas Srivastava	
	Lalit Mukhriya	
Approved BY	Gaurav Sharma	
	Manish Jain	

CONTENTS

1. SCOPE....3

2. STANDARDS APPLICABLE....3

3. TECHNICAL REQUIREMENTS AND SPECIFICATION....3

4. CONSTRUCTION OF THE METER....10

5. INFLUENECE QUANTITIES....11

6. COMPONENET SPECIFICATIONS....12

7. SEALING OF THE METER....13

8. CONNECTION DIAGRAM AND TERMINAL MARKING....13

9. GUARANTEE....13

10. TESTS....14

11. MANUFACTURING ACTIVITIVES....14

12. PACKING....15

13. DRAWING & TECHNICAL LEAFLETS....15

14. GENERAL REQUIREMENT FOR MDAS/HES....15

15. AFTER SALES SERVICE....16

1. SCOPE

IEC compliant, Class- 0.2S, Three phase Four wire, 63.5 volts (Phase to Neutral), -/1 Amp and -/5 Amp Static (Electronic), 4 Quadrant Tri-vector Energy Meter and Software for meter reading and analysis.

This specification covers design, manufacturing, testing and supply of high precision 3 phase 4 wire static tri-vector energy meter of accuracy class 0.2s capable of performing functions of energy audit in EHV /sub transmission system and software for meter reading and analysis.

2. STANDARDS APPLICABLE

The meters shall be of class 0.2s class accuracy and shall meet all the requirements specified in standard IEC specifications.

Standard	Details
IS 14697: 1999	Specification for A.C Static Transformer operated Watt Hour & VAR – Hour meters, class 0.2s
CBIP Technical Report No. 325	Specification for A.C. Static Electrical Energy Meters.
IS 15959 (Companion specification)	DLMS Indian Companion Standard – Category 'B' for Ring fencing/Boundary/ABT Metering

3. TECHNICAL REQUIREMENTS AND SPECIFICATION

Meters are required for installation substations, the basic system parameters wherein these meters will be installed shall be as under: -

3.1 Secondary voltage: 63.5 V (P-N) for 3 phase 4 wire Secondary current: -/1 A or -/5 A (as per tender requirement)

3.2 The meter shall be designed for -/1 A or -/5 A (as per tender requirement) CT secondary and 200% overloading.

3.3 The meters shall make use of non volatile memory for storage of all data including billing and tamper data and data shall be retained even if any component fails.

3.4 The meter should not be dependent on the PT supply and should have the provision of auxiliary power supply. 48V to 110V DC/ 230VAC and shall continue to communicate other remaining parameters on auxiliary power supply.

3.5 Computation of demand shall be on the basis of Real Time Clock of the meter.

3.6 Meters covered under this specification shall be fully static type with non volatile memory to register various billing parameters and complete with other features as detailed out in this specifications. Any other design meeting technical specification requirements or features / accuracy etc. better than this specification requirement manufactured as per relevant IEC /Technical Specification shall also be acceptable.

3.7 Meters shall be suitable for accurate measurement and display of energy and other billing parameters within the specified limits of errors under balanced and unbalanced loads conditions in a poly phase network.

3.8 Power factor Range: Meters shall be suitable for measurement of billing parameters with specified accuracy for full power factor range i.e. zero lag unity zero lead.

3.9 KVAh computation shall be on the basis of power factor lag + lead principle.

3.10 Multiplying factor for the CTs & PTs ratios shall be external.

3.11 The display of energy & also demand shall have minimum seven digits with fixed decimal. The energy and demand shall be displayed in kWh, kVAh, kVARh& kW, kVA, kVARh respectively.

3.14 Provision shall be made to read various billing parameters and also load survey data through a meter reading instrument. This arrangement can be through an optical coupler or any other suitable device galvanically isolated from meter circuit. Provision shall be made to seal the optical coupler to ensure proper security.

3.15 Meter shall indicate the connection status on the display for proactive maintenance.

3.15 Meters shall be designed for satisfactory operation with the following supply voltage / frequency 50 Hz).

Voltage – V. ref +20% to -30 %

Frequency – 47.5 Hz to 52.5 Hz (ref. frequency 50 Hz)

(For above voltage and frequency range the meters shall measure, register and display various parameters accurately).

3.16 **Display Parameters**

The data shall be displayed on LCD display which shall be clearly visible from distance in 7 segments 7 digit.

The display parameters on Auto Scroll as well as Push Button shall be as follows:

SN	Parameter
1.	LCD Segment Check
2.	Meter Serial Number
3.	Real Date And Time
4.	Incoming Active Energy (Total)
5.	Outgoing Active Energy (Total)
6.	Incoming Reactive Energy (Total)
7.	Outgoing Reactive Energy (Total)
8.	Incoming Apparent Energy (Total)
9.	Outgoing Apparent Energy (Total)
10.	Three Phase Power Factor (Instantaneous) With Sign
11.	Line Current L1 (Instantaneous)

12.	Line Current L2 (Instantaneous)
13.	Line Current L3 (Instantaneous)
14.	Phase to Neutral Voltages L1 (Instantaneous)
15.	Phase to Neutral Voltages L2 (Instantaneous)
16.	Phase to Neutral Voltages L3 (Instantaneous)
17.	Phase wise Power Factor
18.	Connection status Flag
19.	Frequency
20.	Incoming Active Demand (Instantaneous)
21.	Outgoing Active Demand (Instantaneous)
22.	Incoming Apparent Demand (Instantaneous)
23.	Outgoing Apparent Demand (Instantaneous)
24.	Incoming Reactive Demand (Instantaneous)
25.	Outgoing Reactive Demand (Instantaneous)
26.	Present PT status
27.	Present CT status
28.	Last occurred and restored tamper with date and time
29.	High resolution active import energy
30.	High resolution active export energy
31.	High resolution reactive import energy
32.	High resolution reactive export energy
33.	High resolution apparent import energy
34.	High resolution apparent export energy

3.17 Meter Reading during Power Outage
It shall be possible to read the meter if there is No Power to the meter.

3.18. Maximum Demand Registration
Maximum demand computation shall be based on block interval concept with integration period of 15 minutes.

3.19 The MD integration cycle shall be on the basis of real time.

3.20. **Tamper Features**

Missing Potential – To indicate loss of potential in any or two phases of potential supply. The identification of phase date and time of first occurrence, date and time of last tamper restore and cumulative number of tampering shall be indicated.

Current Unbalance – To indicate there has been unbalance of current beyond the prescribed limits. (As approved by BSES)

Voltage Unbalance – To indicate there has been unbalance of Voltage beyond the prescribed limits. (As approved by BSES)

CT Short/ Open – The meter shall be capable of detecting and recording occurrences and restoration of shorting (bypassing) / opening of any one or two phases of CT.

Current Reversal – The meter shall be capable of detecting and recording occurrence and restoration with date and time if the current is flowing in reverse direction in one or more phases.

Power On/Off – The meter shall be capable to record power on /off events in the meter memory. All potential failure should record as power off event.

Over Current –When load condition at any phase i.e. Line current at any phase goes more than defined limit (as approved by BSES), this will be detected as Over current condition.

High and Low Voltage –The meter should detect under and over voltage events respectively if voltage falls / rise from defined limits. (As approved by BSES)

Snapshots (numerical values) should have Phase wise value of given parameters as voltage, current (Line, Active, Reactive), power factor and active, reactive & apparent energy readings with direction tag as well as the date and time of logging of the occurrence and restoration of all tamper events, subject to meter-memory space as described herein under, should be logged in the meter-memory and available for retrieving through local communication using CMRI or remote communication using the MDAS/HES.

Minimum 200 events (occurrence and restoration where occurrence and restoration shall be counted as separate events) of all tampers with date and time shall be available in the meter memory on first-in, first-out basis.

The values for voltage, current and P.F. etc. for the purpose of logging occurrence and restoration of various types of tamper shall be mentioned.

3.21 Provision should be made for automatic reset of max demand at the end of pre-defined period (eg. Beginning of month, every16th of month etc). Default resetting date is 00:00 hrs, 1st of every month. Billing parameters should be available for last 12 months.

3.22 **Load Survey Capability**

It should be possible to store previous data of 40 days for interval of 15 minutes for parametersand snapshots of energies at 24:00hours as mentioned below:

Load Survey Parameters (15 minute integration for last 40 days)	
S.N0	**Description**
1	Average Active Demand (Outgoing)
2	Average Active Demand (Incoming)
3	Reactive Demand lag While Active Import
4	Reactive Demand lead While Active Import
5	Reactive Demand lag While Active Export
6	Reactive Demand lead While Active Export
7	Average Apparent Demand (Outgoing)
8	Average Apparent Demand (Incoming)
9	Average Active Energy (Outgoing)
10	Average Active Energy (Incoming)
11	Reactive Energy lag While Active Import
12	Reactive Energy lead While Active Import
13	Reactive Energy lag While Active Export
14	Reactive Energy lead While Active Export
15	Average Apparent Energy (Outgoing)
16	Average Apparent Energy (Incoming)
17	Phase Voltage (Instantaneous & Average) L1
18	Phase Voltage (Instantaneous & Average) L2
19	Phase Voltage (Instantaneous & Average) L3
20	Phase Current (Instantaneous & Average) L1
21	Phase Current (Instantaneous & Average) L2
22	Phase Current (Instantaneous & Average) L3
23	Phase wise Power factor
24	Frequency
25	Phase wise Average Active Demand (Outgoing)
26	Phase wise Average Active Demand (Incoming)
27	Power off minutes in integration period

Mid Night Parameters (Snapshot at 24:00 hours for last 40 days)	
1	Active Energy (Import)
2	Active Energy (Export)
3	Reactive Energy (Import)
4	Reactive Energy (Export)
5	Apparent Energy (Import)
6	Apparent Energy (Export)
7	Reactive lag While Active Import
8	Reactive lead While Active Import
9	Reactive lag While Active Export
10	Reactive lead While Active Export

3.23 It should be possible to down load parameters, daily midnight readings and load survey data using BCS and obtain full details of demand and consumption

3.24 Meters shall be four quadrant meters capable of recording active reactive and apparent energy and also demand in all the four quadrants.

3.25 **Communication**

For the output ports available in the meter, standard communication interface shall only be adopted. The Meters shall be Modbus compliant. **However it is preferable if meter have both Modbus and DLMS (IS 15959) protocols selectable at site.** The energy meter shall have a hardwired RS 485 port for serial data communication and galvanically isolated optical communication port, so that it can be easily connected to hand held common meter reading instrument for data transfer with proper security and without error. The energy meter shall have an optional RS 232 port so that there is a provision to subsequently hook the meter directly to a remote metering device such as GPRS/3G/4G Modem etc. The optical port shall be located in front of the meter and shall have adequate sealing arrangement to seal it.Meters covered under this specification will be employed for metering at sub stations. In this case the instantaneous parameters load survey data and tamper information etc will be monitored remotely at central station.

In case any proprietary protocol is used in the meter, It will be obligatory on the part of the bidders to furnish complete details of proprietary protocol to the purchaser so that there may not be any difficulty in extraction of data from the meter through the available ports when connected to the communication bus (prepared for some other data communication purpose). Details of protocol used are necessarily required to be intimated / furnished by the suppliers to purchaser.

The meter supplier shall integrate the meters with existing / planned remote communication system or device, including devices (from any vendor) and set-up used in BSES. The supplier is required to provide an undertaking in this regard.

It shall be possible to download the following parameters from Remote location at a frequency of every 15 minutes -

SN	Description
1.	LCD Segment Check
2.	Meter Serial Number
3.	Real Date And Time
4.	Incoming Average Demand (Active Power) in Last Integration Period
5.	Outgoing Average Demand (Active Power) in Last Integration Period
6.	Incoming Average Demand (Reactive Power) in Last Integration Period
7.	Outgoing Average Demand (Reactive Power) in Last Integration Period
8.	Incoming Average Demand (Apparent Power) in Last Integration Period
9.	Incoming Average Demand (Apparent Power) in Last Integration Period

10.	Incoming Active Energy (Total)
11.	Outgoing Active Energy (Total)
12.	Incoming Reactive Energy (Total)
13.	Outgoing Reactive Energy (Total)
14.	Incoming Apparent Energy (Total)
15.	Outgoing Apparent Energy (Total)
16.	Three Phase Power Factor (Instantaneous) With Sign
17.	Connection status Flag
18.	Line Current L1 (Instantaneous)
19.	Line Current L2 (Instantaneous)
20.	Line Current L3 (Instantaneous)
21.	Phase to Neutral Voltages L1 (Instantaneous)
22.	Phase to Neutral Voltages L2 (Instantaneous)
23.	Phase to Neutral Voltages L3 (Instantaneous)
24.	Phase wise Power Factor
25.	Frequency
26.	Incoming Active Demand (Instantaneous)
27.	Outgoing Active Demand (Instantaneous)
28.	Incoming Apparent Demand (Instantaneous)
29.	Outgoing Apparent Demand (Instantaneous)
30.	Incoming Reactive Demand (Instantaneous) with Sign(“+” for Lag”-“ for Lead)
31.	Outgoing Reactive Demand (Instantaneous) with Sign(“+” for Lag”-“ for Lead)
32.	Cumulative tamper count
33.	Cumulative MD reset Count
34.	Cumulative reactive (Demand & Energy) lag While active import
35.	Cumulative reactive (Demand & Energy) lead While active import
36.	Cumulative reactive (Demand & Energy) lag While active Export
37.	Cumulative reactive (Demand & Energy) lead While active Export
38.	Number of power failures
39.	Cumulative power failure duration.
40.	Present PT status
41.	Present CT status
42.	Last occurred and restored tamper with date and time
43.	Incoming maximum Active demand (Previous Month)
44.	Outgoing maximum Active demand (Previous Month)

45.	Incoming maximum Reactive demand (Previous Month)
46.	Outgoing maximum Reactive demand (Previous Month)
47.	Incoming maximum Apparent demand (Previous Month)
48.	Outgoing maximum Apparent demand (Previous Month)
49.	Incoming Active Energy (Previous Month)
50.	Outgoing Active Energy (Previous Month)
51.	Incoming Reactive Energy (Previous Month)
52.	Outgoing Reactive Energy (Previous Month)
53.	Incoming Apparent Energy (Previous Month)
54.	Outgoing Apparent Energy (Previous Month)
55.	Incoming Active Energy (Previous Month Consumption)
56.	Outgoing Active Energy (Previous Month Consumption)
57.	Incoming Reactive Energy (Previous Month Consumption)
58.	Outgoing Reactive Energy (Previous Month Consumption)
59.	Incoming Apparent Energy (Previous Month Consumption)
60.	Outgoing Apparent Energy (Previous Month Consumption)

3.26 Output device: The meters shall have a test output in the form of a blinking of LED for testing of the meters accuracy. Testing shall also be possible through optical port accessible from the front and can be monitored with meter reading instrument having high resolution display. The meters shall give high resolution energy values directly to meter reading instruments. The resolution will be sufficient to enable conduction of the starting current and accuracy test in less time.

3.27 Meter shall operate and record satisfactorily independent of phase sequence of input supply so long as phase association between voltage and current circuit is in order.

3.28 The performance of meter should not be affected by the external electromagnetic interference such as Electricals discharge of cable and capacitor, harmonics, electrostatic discharges, external magnetic field and injection of DC current in AC circuits etc.

3.29 The basic meter shall be designed for overloading up to 200%.

3.30 No setting point/ setting register etc, shall be provided for adjustment of measurement errors.

4. CONSTRUCTION OF THE METER

Body of the meter shall be designed suitable for projection mounting. The meter should be made of high

quality raw material to ensure higher reliability and longer life. The meter should be compact and reliable in design e.g. to transport and immune to vibration and shocks involved in transportation / handling. The construction of the meter shall be suitable for this purpose in all respects and shall give assurance of stable and consistent performance under all conditions especially during dust storm / heavy rains / very hot days. All insulating material used in the construction of the meter shall be non hygroscopic non ageing and of tested quality. All parts that are likely to develop corrosion shall be effectively protected against corrosion.

SN	Parameters	Technical Requirements
1.	Meter Body	Normally top transparent and base opaque material polycarbonate of LEXAN 143A/943AA or equivalent grade. Should be ultrasonically welded.
2.	Terminal Block	Made of polycarbonate of grade 500R or equivalent grade, Integral part of the meter base, brass or copper current terminals with flat end screw.
3.	Terminal Cover	Transparent terminal cover with provision of sealing through sealing screw.
4.	Resistance of heat and fire	The terminal block and meter case shall have reasonable safety against the spread of fire. They shall not be ignited by thermal overload of live parts in contact with them.
5.	Marking on name plates	"GRID Meter" shall be boldly marked on name plate. Design of Name plate will be approved by BSES before supply of meters.
6.	Meter Sealing	Supplier shall affix minimum one OWN hologram seal on side of meter body. Additionally another seal will be fixed as provided by BSES.
7.	Guarantee	5 years from date of installation or 5.5 years from date of dispatch.
8.	Insulation	A meter shall withstand an insulation test of 8kV.

5. INFLUENECE QUANTITIES

The meter shall work satisfactorily with guaranteed accuracy limit under the presence of the following influence quantities:

a. External Magnetic Field
b. Electromagnetic Field Induction
c. Radio Frequency Interference
d. Unbalanced Load
e. Vibration
f. Waveform 10% of 3rd Harmonics
g. Phase Sequence
h. Voltage Unbalance
i. Electromagnetic H.F Field
j. Temperature & Humidity

6. COMPONENET SPECIFICATIONS

SN	Component Function	Requirement
6.1	Current Transformers	The Meters should be with the current transformers as measuring elements.
6.2	Measurement or computing chips	The Measurement or computing chips used in the Meter should be with the Surface mount type along with the ASICs.
6.3	Memory chips	The memory chips should not be affected by the external parameters like sparking, high voltage spikes or electrostatic discharges.
6.4	Display modules	a) The display modules should be well protected from the external UV radiations. b) The display visibility should be sufficient to read the Meter mounted at height of 0.5 meter as well as at the height of 2 meters c) The construction of the modules should be such that the displayed quantity should not disturbed with the life of display (PIN Type). d) It should be trans-reflective HTN or STN type industrial grade with extended temperature range.
6.5	Communication modules	Communication modules should be compatible for the two RS 232 ports (one for optical port for communication with Meter reading instruments & the other - for the hardwired RS 232 port to communicate with various modems for AMR)
6.6	Optical port	Optical port should be used to transfer the meter data to meter reading instrument. The mechanical construction of the port should be such to facilitate the data transfer easily.
6.7	Power Supply	The power supply should be with the capabilities as per the relevant standards. The power supply unit of the meter should not be affected in case the maximum voltage of the system appears to the terminals due to faults or due to wrong connections.
6.8	Electronic components	The active & passive components should be of the surface mount type & are to be handled & soldered by the state of art assembly processes.
6.9	Mechanical parts	a) The internal electrical components should be of electrolytic copper & should be protected from corrosion, rust etc. b) The other mechanical components should be protected from rust, corrosion etc. by suitable plating/painting methods.
6.10	Battery	Lithium with guaranteed life of 15 years
6.11	RTC & Micro controller	The accuracy of RTC shall be as per relevant standards

SN	Component Function	Requirement
6.12	P.C.B.	Glass Epoxy, fire resistance grade FR4, with minimum thickness 1.6 mm

Note: The components used by manufacturer shall be of reputed make and shall have "Minimum Life"more than the 10 years. The vendor has to certify the same.

7. SEALING OF THE METER

Proper sealing arrangements shall be provided on the meter to make it tamper proof and avoid mishandling by unauthorized person. At least two (2) seals on the body, two (2) seal on the terminals blocks and one seal each on communication ports could be provided. All the seals shall be provided on the front side only.

The meter body cover should be ultrasonically welded with the base such that it would not be opened without breaking / damaging the meter body.

8. CONNECTION DIAGRAM AND TERMINAL MARKING

The connection diagram of the meter shall be clearly shown on inside portion of terminal cover and shall be of permanent nature, Meter terminals shall also be marked and this marking should appear in the above diagram.

8.1 Meter shall have a name plate clearly visible effectively secured against removal and indelibly and distinctly marked with all the essential particulars as per relevant standards i.e.

a. Manufacturer's name and trademark
b. Meter serial number*
c. Type and description
d. Rated current voltage and frequency
e. Relevant IS/ IEC No should be printed along with ISI certification mark.
f. Manufacturer's meter constant shall invariably be indicated duly printed.
g. Name of the utility – "Property of BSES"
h. Purchase order no.
i. Month and year of manufacturing
j. Guarantee Period

Meter serial nos shall be shared by BSES

9. GUARANTEE

The meter shall be guaranteed for the period of five years from the date of commissioning or five and half year from the date of dispatch, whichever is earlier. The meters and also software / MRIs found defective within the above guarantee period shall be replaced / repaired by the supplier free of cost within one month of receipt of intimation.

10. TESTS

10.1 Type Testing of Meters: The offered meter should be strictly in conformance to the tender specification. The offered meters should be fully type tested at NABL accredited Laboratory as per relevant standards.

10.2 Acceptance Test: All acceptance test as per relevant standard shall be carried out in the meter

10.3 Routine Test: All routine testsas per relevant standard shall be carried out in the meter

10.4 Pre Dispatch Inspection: All acceptance tests and inspection of meter / software shall be carried out at the place of manufacture unless otherwise specially agreed upon by the manufacturer and purchaser at the time of purchases. The manufacturer shall offer to the inspector representing the purchaser all the reasonable facilities, free of charge for inspection and testing to satisfy him that the materials is being supplied in accordance with this specifications. The Company's representative / Engineer attending the above testing will carry out testing as relevant Standard and this specification and issue test certificate approval to the manufacturer and given clearance for despatch.

Minimum Testing Facility: Manufacturer should posses fully computerized meter test bench system for carrying out routine and acceptance tests as per relevant standard. In addition this facility should produce test reports for each and every meter.

11. MANUFACTURING ACTIVITIVES

Meter should be manufactured using SMT (surface mount technology) component and by deploying automatic SMT price and place machine and reflow solder process. Further the bidder should own or have assured access (though hire, lease or subcontract) of above facility. Quality should be ensued at the following stages.
(a) At PCB manufacturing stage, each Company shall be subjected to computerized bare Company testing.
(b) At insertion stage all components should under go computerized testing for confirming to design parameters and orientation.
(c) Complete assembled and soldered PVC should under go functional testing using automatic test equipments (ATEs).
(d) Prior to final testing and Calibration all meters shall be subjected to aging test (i.e. metes will be kept in ovens for 72 hours at 55 deg. cent temperature and atmospheric humidity under real life condition at its full load current. After 72 hours meters should works satisfactorily) to eliminate infant mortality. The calibration of meters shall be done in house.The bidders should submit the list of all components used in meter along with the offer.
The suppliershall give 15 days advanced intimation to enable BSES to depute representative for lot inspection and complete all integration activities required by BSES before shipment of material.

12. PACKING

Each meter may be suitably packed in the first instant to prevent ingress of moisture and dust and then placed in cushioned carton of a suitable material to prevent damage due to shocks during transit. The lid of the carton may be suitably sealed. Each meter should be packed in separate cushioned carton. A suitable number of selected cartons may be packed in a case of adequate strength with extra cushioning if considered necessary. The cases may be properly sealed against accidental opening in transit. The packing cases should be marked to indicate the fragile nature of the contents.

13. DRAWING & TECHNICAL LEAFLETS

Following drawings & Documents shall be submitted with the offer:

a. Detailed dimensional drawing of the meter
b. Rating plate
c. Terminal Block dimensional drawing ‘
d. Mounting arrangement drawings, connection diagram
e. Meter box drawing and dimensions
f. Component list
g. Display parameter
h. Type Test Certificates from NABL approved laboratories.
i. Tamper details
j. PIN configuration of Optical to RJ11 connector
k. Manual and SOP/DWI for operation
l. 01 no Meter sample

14. General Requirement for MDAS/HES

MDAS / HES shall have following minimum features -

1. MDAS / HES shall be scalable to meet BSES requirement
2. MDAS / HES shall be hosted / deployed at BSES data center only
3. MDAS / HES shall have User Access Rights Management System so that as per capability and requirement of user, rights could be provided and security keeps maintained.
4. MDAS / HES shall have option to export CDF as per MIOS standard as well as user defined report generation in format of Excel, PDF, XML and CSV for further integration with system
5. MDAS / HES shall maintain the audit trail of all transaction/changes with date and time.
6. Facility for On Demand acquisition of meter data and at user selectable periodicity
7. MDAS / HES application should have cyber security features as per standards
8. Support secure communication at all interface points

9. Store raw meter data for defined duration
10. Maintain time sync with meter and provision to correct RTC as per defined roles
11. Handling of Control signals / event messages on priority
12. Setting of meter configurable parameters
13. Remote configuration of meter parameters as per defined user roles, firmware upgrades remotely, MIS reports and exceptions reports.
14. Selective meters data can be scheduled to pull from MDAS / HES as desired.
15. Ensure data availability of 99.5% at MDAS / HES
16. Ability to attempt meter reading to recover missed reads and intermittent meter reads
17. Ability to receive and store outage and restoration event data from smart meters and outage systems and to log all such events for analysis
18. The MDAS / HES shall enable BSES to deliver reports in standard digital format such as PDF, Excel, etc.
19. MDAS / HES shall have User dashboard for alarms, events, communication status and provision to send email, SMS etc.
20. Display via a GUI the energy usage profile for a single meter or group of meters. The load profile shall illustrate energy consumption and peak demand in user defined intervals for a user-specified time period.

15. AFTER SALES SERVICE

In order to provided prompt and smooth after sales support /service etc. It shall be preferred to post / engage an engineer/ technician in Delhi by the manufacturer, to attend any minor defects immediately and to educate the user about proper installation of meter and programming of MRI base computer taking reading billing data load survey tamper information etc. through MRI and down load to PCs.
Manufacturer shall undertake to replace meter in case of failure within the guarantee period. The meters which are found defective/inoperative within the guarantee period, shall be replaced within six weeks of receipt of report for such defective/inoperative meters. If the defective meters are not replaced within the specified period then the same shall be treated as breach of performance and shall be liable for penalty. Delivery of software for HHU/CMRI before meter delivery is required. Vendor shall also ensure to deliver solution to meet DERC mandate within mutually agreed timeline at both MDAS/HES and CMRI. For any false events recorded in meter, vendor shall depute their representative for field visit within one week and provide the root cause analysis in 2 weeks time.

--End of Doc--

BSES Rajdhani Power Limited
BSES Bhawan, Nehru Place, New Delhi- 19

TECHNICAL SPECIFICATION

FOR

PACKING & TRANSPORTATION

Prepared by					**Rev: 0**
Reviewed by					**Date:**
Approved by					

Technical Specification Packing and Transportation

1.0 PACKING AND TRANSPORTATION

1.1 Packing shall be sturdy and adequate to protect all assemblies, components and accessories from injury by corrosion, dampness, heavy rains, breakage and vibration encountered during transportation, handling and storage at the plant site. All accessories, which are likely to get damaged during transit if transported mounted on the equipment, shall be removed, adequately packed and shipped separately. All openings shall be sealed. Spare parts shall be packed separately and clearly marked. They shall be specially packed for long storage without injury.

1.2 The bidder shall after proper painting, pack and crate all plant equipment for sea shipment/air freight in a manner suitable for export to a tropical humid and saline air borne climate region as per Internationally accepted export practice in such a manner so as to protect it from damage and deterioration in transit by road, rail and/or sea and during storage at site till the time of erection. The bidder shall be held responsible for all damages due to improper packing.

1.3 The bidder shall give complete shipping information concerning the weight, size, contents of each package including any other information the Owner may require. The weight and size of the package shall be such that they can be easily transported from the maker's works to the plant site by ship/air, road ways and railways.

1.4 The bidder shall ascertain at an early date and definitely before the commencement of manufacture, any transport limitations such as weights, dimensions, road culverts, overhead lines, free access etc. from the manufacturing plant to the project site; and furnish to the Owner confirmation that the proposed packages can be safely transported, as normal or oversize packages, upto the plant site. Any modifications required in the infrastructure and cost thereof in this connection shall be done and borne by the bidder.

1.5 The bidder shall prepare detailed packing list of all packages and containers, bundles and loose materials forming each and every consignment dispatched to 'site'. The bidder shall further be responsible, for making all necessary arrangements for loading, unloading and other handling right from his works; and from Indian port for equipment under the Off-shore Supply till the 'site' and also till the equipment is erected, tested and commissioned. The bidder shall be solely responsible for proper storage and safe custody of all equipment.

1.6 All packages must be marked consecutively from number one upwards covering all shipments until completion of the plant equipment execution without repeating the same number. Each box, crate, case bundle or each piece of lose material shall be painted with a combination of one white band and one yellow band of a least 4 cm wide each, round the body of the box, crates, etc as the case be for easy identification.

2.0 GPS instrument must be installed for proper tracking of material during transit of major equipment like Transformer, GIS Panel,11KV & 66 KV panels etc. of MAP my india make (asset tracking system)

Technical Specification Packing and Transportation

3.0 DEVIATIONS

Deviation from this specification, if any, shall be clearly brought out in the offer. Unless owner explicitly accepts such deviations, it shall be considered that the offer fully complies with the specification.

TECHNICAL SPECIFICATION

APPROVED MAKES & VENDERS

Prepared by	**Abhinav Srivastava**		**Rev: 1**
Reviewed by	**k.Sheshadri**		**Date: 22.07.2018**
Approved by	**k.Sheshadri**		

Technical Specification for Approved Makes & Vendors

1.0 APPROVED MAKES & VENDORS

S NO.	Vendors
1.0	**Power Transformer**
1.1	BHARAT BIJLEE LIMITED
1.2	ABB LIMITED
1.3	SCHNEIDER ELECTRIC LIMITED.
1.4	BHEL
1.5	CGL
1.6	Toshiba
2.0	**Station Transformers**
2.1	SCHNEIDER ELECTRIC LIMITED.
2.2	TOSHIBA
2.3	DANISH
2.4	CGPISL
3.0	**LT Control, Communication and special cables**
3.1	POLYCAB
3.2	PARAMOUNT COMMUNICATIONS LIMITED
3.3	TARUNA METALS PVT. LIMITED.
3.4	ALPHA COMMUNICATION
3.5	KEI INDUSTRIES LIMITED.
4.0	**LT(1.1 KV grade) XLPE Insulated Power Cables**
4.1	PARAMOUNT COMMUNICATIONS LIMITED
4.2	KEI INDUSTRIES LIMITED.
4.3	HINDUSTAN VIDYUT PRODUCTS LIMITED
4.4	GEMSCAB INDUSTRIES LIMITED
4.5	KRISHNA ELECTRICAL INDUSTRIES LIMITED
4.6	POLYCAB WIRES PRIVATE LIMITED
4.8	KEC INTERNATIONAL LIMITED (RPG CABLES LIMITED)
4.9	HAVELLS
5.0	**11KV 500MVA Indoor Switchboard**
5.1	SIEMENS LIMITED
5.2	ABB LIMITED
5.3	SCHNEIDER ELECTRIC LIMITED.
5.4	Stelmec
5.5	L&T
5.6	CG Power
6.0	**66KV Outdoor Circuit Breakers**
6.1	ABB LIMITED
6.2	SIEMENS LIMITED
6.3	GE
6.4	CGPISL

7.0	**66KV & 11KV Outdoor CT/PT**
7.1	CROMPTON GREAVES LIMITED
7.2	KAPCO ELECTRIC PVT. LIMITED.
7.3	GE
7.4	MEHRU ELECTRICAL & MECHANICAL ENGINEERS P LIMITED.
7.5	ABB LIMITED
7.6	BHEL
8.0	**CVT**
8.1	CROMPTON GREAVES LIMITED
8.2	ABB LIMITED
8.3	MEHRU
8.4	GE
8.5	SIEMENS
8.0	**33&66KV Lightening Arrestor**
8.1	ALSTOM
8.2	OBLUM ELECTRICAL INDUSTRIES PVT. LIMITED.
8.3	LAMCO INDUSTRIES PVT. LIMITED.
8.4	ABB LIMITED
8.5	CROMPTON GREAVES LIMITED.
8.6	ELECTROLYTE
8.7	RAYCHEM
9.0	**66KV Isolators**
9.1	ABB LIMITED.
9.2	SIEMENS LIMITED.
9.3	CROMPTON GREAVES LIMITED.
10.0	**66KV Control & Relay Panel**
10.1	ABB LIMITED.
10.2	SCHNEIDER ELECTRIC LIMITED.
10.3	SIEMENS LIMITED.
11.0	**11KV Capacitor Bank**
11.1	UNIVERSAL CABLES LIMITED.
11.2	SHREEM ELECTRIC LIMITED
11.3	ABB LIMITED
11.4	LARSEN & TOUBRO LIMITED
11.5	EPCOS INDIA PVT. LIMITED
12.0	**ACDB &BMK**
12.1	NEPTUNE
12.2	CMKL
12.3	NEC

12.4	EATHUN
12.5	POPULAR SWITCHGEAR
12.6	SHIVALIC
13.0	**St. through jointing and Termination Kits – 1.1KV,11KV**
13.1	RAYCHEM RPG LIMITED
13.2	3M ELECTRO & COMM. INDIA (P) LIMITED.
13.3	DENSON
14.0	**St. through jointing and Termination Kits – 66KV**
14.1	RAYCHEM RPG LIMITED
14.2	3M ELECTRO & COMM. INDIA (P) LIMITED.
15.0	**LED/HPSV/Fluorescent Lamps, Ballasts, Starters / Igniters, Fittings, Lamp Holder**
15.1	PHILIPS ELECTRONICS INDIA LIMITED
15.2	CROMPTON GREAVES LIMITED
15.3	BAJAJ ELECTRICALS LIMITED
15.4	SURYA ROSHNI LIMITED
16.0	**Transformer oil**
16.1	APAR INDUSTRIES LIMITED
16.2	SAVITA OIL TECHNOLOGIES LIMITED
16.3	RAJ PETRO SPECIALITIES PVT. LIMITED.
17.0	**Protective Relays (Refer Technical specification for details)**
17.1	SIEMENS LIMITED
17.2	A-EBERLE
17.4	ABB LIMITED
17.5	SCHNEIDER ELECTRIC
17.6	GE
18.0	**Overhead Line accessories e.g. Clamps, Connectors, Line Hardware fitting**
18.1	RAYCHEM RPG PVT.LIMITED
18.2	RASHTRA UDHYOG LIMITED.
18.3	KLEMMEN ENGINEERING
18.4	LEGION
18.5	BURMA
19.0	**Disc and Pin Insulators**
19.1	ADITYA BIRLA INSULATORS
19.2	MORDEN INSULATORS LIMITED.
19.3	BHEL
19.4	IEC
19.5	W.S. INDUSTRIES

20.0	**STEEL TUBULAR POLES**
20.1	FABRICO (INDIA) PVT. LIMITED.
20.2	ADVANCE STEEL TUBES LIMITED.
20.3	GOOD LUCK STEEL TUBES LIMITED.
20.4	RAMA STEEL TUBES LIMITED.
21.0	**ACSR Conductors**
21.1	HINDUSTAN VIDYUT PRODUCTS LIMITED
21.2	GUPTA POWER
21.3	LUMINO INDUSTRIES LIMITED
21.5	POLYCAB WIRES PRIVATE LIMITED
22.0	**Battery Bank (Li Ion and Ni-Cd)**
22.1	HBL
22.2	Amco saft
22.3	Coslite
22.4	Okaya
22.5	Lohum
23.0	**Battery Charger cum DC DB**
23.1	MASS-TECH CONTROLS PRIVATE LIMITED
23.2	CALDYNE AUTOMATICS LIMITED.
23.3	CHABI ELECTRICALS
24.0	**PAINTS & CHEMICALS**
24.1	BERGER PAINTS INDIA LIMITED BRITISH PAINTS DIVISION
24.2	SHALIMAR PAINTS LIMITED.
24.3	NEROLAC PAINTS LIMITED.
24.4	ASIAN PAINTS LIMITED.
25.0	**CEMENT**
25.1	ACC
25.2	ULTRA TECH
26.0	**STEEL**
26.1	TATA
26.2	SAIL
27	NIFPS
27.1	CTR
28	High Mast
28.1	Bajaj Electricals Ltd

Technical Specification for Approved Makes & Vendors

29	Cable Seal
29.1	Roxtec
29.2	MCT Brattberg
29.3	UGA Cable and Pipe Sealing Systems India Pvt. Ltd.
30	**EOT Crane**
30.1	REVA
30.2	DEMAG
31	**66kV GIS**
31.1	Siemens
31.2	GE
31.3	ABB
31.4	Hyosung
32	**GIS Gas Handling kit(Gas filling, filter and evacuation kit)**
32.1	DILO

TECHNICAL SPECIFICATION

TRAINING AND INSPECTION

Prepared by	**Javed Ahmed**		**Rev: 0**
Reviewed by	**Abhinav Srivastava**		**Date: 17.05.2021**
Approved by	**K.Sheshadri**		

Training and Inspection

The Scope includes training and inspection of BRPL Officials at site and at OEM's factory on overall product and all its sub-components. Cost of travel by flight and

1. Training of BRPL officials

   The Scope includes training of BRPL Officials at site and at OEM's factory on overall product and all its sub-components.
   BRPL official will include departmental personnel from Operation & Maintenance, Protection, SCADA and Engineering.
   Training will include, but not limited to, verbal and written communication on aspects ranging from operation, maintenance, safety, features and functions.
   It will be the responsibility of contractor to arrange the following:

   i) To arrange Air travel and Taxi for local conveyance at the contractors cost for the engineers/ officers deputed for carrying out the inspection of the material.

   ii) To arrange the minimum 4 star accommodation at the contractors cost for the boarding/ lodging and meals thereof for the engineers/ officers deputed for carrying out the inspection of the material.

   ii) To depute his competent representative to impart training of the material.

   Following Table defines mandays required for training of each equipment.

S. No.	Equipment	Training at Site (No. of Days)	Training at Factory (No of Days)	No. of BRPL Representatives for Factory Visit
1	C&R Panels	6	2	3
2	Power Transformer	1	1	2
3	11 kV Panels	3	2	3
4	SCADA – RTU	3	2	2
5	Battery Bank	1	1	1
6	Battery Charger	1	1	1
7	11kV APFC with Controller	3	2	3
8	PQ Analyser	1	0	0
9	Grid Monitoring System	1	0	0
10	Video Surveillance System	1	0	0
11	Fire Detection System	1	0	0
12	Fire Suppression System	1	0	0
13	CT,PT and CVT	1	0	0

2. Inspection & Testing

2.1 Independent Inspection
BRPL may at his discretion delegate inspection and testing of material to an independent inspector.

2.2. Dates for Inspection and Testing
The Contractor shall give the Owner reasonable notice (minimum 10 days) in writing of the date and the place at which any material will be ready for testing as provided in the Contract and Owner shall attend at the place so named within fifteen (15) days of the date, which the Contractor has stated in his notice. The Owner shall give the Contractor twenty four (24) hours notice in writing of his intention to attend the tests. The above notices shall be given at first by the quickest possible means and confirmed later in writing.
If on receipt of the Contractor's notice of testing, the Owner's representative does not find the material to be ready for testing, the costs incurred for re-deputation of inspector and re-inspection shall also be in Contractor's Scope.

2.3 Inspection charges:

Detailed Breakup of no. of inspectors for each inspection shall be as under.

S. No	Equipment	No of Inspectors
1	Power Transformer	2
2	CRP	3
3	RTU	2
4	HT Panels	2
5	For all other equipments	1
6	For all testing and measuring instruments	2
7	For all Stage inspections	1

It will be the responsibility of contractor to arrange the following:

i) Cost of all the inspections within India and abroad (including re inspections) including flight Tickets, local conveyance, Boarding and lodging (Minimum 4 Star Hotel for India and Minimum 4 Star for Abroad) shall be in scope of Vendor. The Factory visits will be held at OEM Factory only.

ii) To depute his authorized representative to associate during the inspection of the material.

In case of fake call or rejection of material or any other cause, the Owner is

not liable for reimbursement of the expenditure so incurred by the contractor.

2.4 Rejection

If as-a-result of the inspection, examination or testing as per approved QAP, the Owner decides that any equipment is defective or otherwise not in accordance with the Contract, he may reject such equipment and shall notify the Contractor there-of, immediately. The notice shall state the Owner's objections with reasons.
The Contractor shall then with all speed make good the defect or ensure that any rejected equipment complies with the Contract.
If the Owner requires such Equipment to be re-tested, the tests shall be repeated under same terms and conditions. All costs incurred for re-deputation of inspector and re-inspection shall also be in Contractor's Scope.

VOLUME – II

SCHEDULE AND ANNEXURE

BSES

TECHNICAL SPECIFICATION OF SINGLE PHASE SECONDARY INJECTION KIT

Specification no – BSES-TS-163-SPSIK-R0

Rev:		00
Date:		17.09.2024
Pages		9
Prepared by	VijenderGoyal	
	Sonia Mittal	20/9/24
Reviewed by	Srinivas Gopu	
	Abhinav Srivastava	
Approved by	Gaurav Sharma	
	Gopal Nariya	

INDEX

Record of Revision 3

1.0 SCOPE OF SUPPLY 4

2.0 CODES & STANDARDS 4

3.0 SERVICE CONDITIONS 4

4.0 DESIGN FEATURES 5

5.0 QUALITY ASSURANCE PLAN, INSPECTION AND TESTING 7

6.0 PACKING, SHIPPING, HANDLING & SITE SUPPORT 8

7.0 DEVIATIONS 9

8.0 DOCUMENT SUBMISSION MATRIX 9

Record of Revision

Sl No.	Revision No	Item/Clause No.	Nature of change	Approved by

1.0 SCOPE OF SUPPLY

This specification covers the general requirements of design, manufacture, testing at manufacturer's works, packing and delivery at site of the Single phase secondary injection Kit along with necessary accessories.

2.0 CODES & STANDARDS

Materials, equipment and methods used in the manufacture of Single phase secondary injection kit shall conform to the latest edition of following:

S No.	Standard	Description
2.1	Latest Edition	IndianElectricityRules1956
2.2	Latest Edition	IndianElectricityAct1910
2.3	IEC61010	Safety requirements for electrical equipment for measurement, control & laboratory use
2.4	IEC61326	Electrical equipment for measurement, control & laboratory use EMC Requirements

3.0 SERVICE CONDITIONS

Single phase Secondary Injection Kit to be supplied against this specification shall be suitable for satisfactory operation under the following conditions:

3.1	Supply Voltage	Single phase neutral, AC 230 Volt ±10%
3.2	Supply Frequency	50 Hz ± 5%
3.3	Pollution	Heavily Polluted and Dry
3.4	Humidity	90% maximum
3.5	Ambient Temperature	Average 40^0 C, Maximum 50^0 C
3.6	Minimum ambient air temperature	0^0 C
3.6	Seismic Zone	4

4.0 DESIGN FEATURES

Sr. No.	Descriptions	BSES Requirement
4.1	Purpose	Single phase secondary injection kit should be able to test OC, EF Directional, EF Non Directional, Under Voltage, Over Voltage, Under Frequency Over Frequency, Differential , Impedance Sync Check Protection relays
4.2	Construction	The instrument should be portable, rugged and easy to operate.
4.3	Operation and control	
4.3.1	PC based operation	a) Easy to operate from a PC interface for steady-state, dynamic-state and transient testing. b) PC interface software should be Windows based. USB to import/download the test results from Test kit to Laptop/Desktop. c) Software License should be provided without any cost implication for Life time validity, the kit should generate and store reports in .CSV,.pdf, xlsx format.
4.3.2	Manual operation	Suitable controls to be provided on equipment front for manual testing and control.
4.4	Display	LCD type suitable for showing digital readings and graphical displays for all relevant test parameters
4.5	Main Power Supply	230V AC ± 10%,50Hz
4.6	Output Auxiliary Current source	
4.6.1	No. of sources	Two (one may be convertible)
4.6.2	Output current	0 to 100A range
4.6.3	Rated burden	200VA
4.6.4	Accuracy	±0.5%
4.7	Output AC Voltage source	
4.7.1	No. of Sources	Two
4.7.2	Output voltage range for each source	0 to 250V AC
4.7.3	Phase angle range	0 to 360 degree
4.7.4	Frequency Range	5 Hz to 250 Hz

Sr. No.	Descriptions	BSES Requirement
4.7.5	Resolution	10 mHz
4.7.6	Accuracy	±0.5%
4.8	Output DC Voltage source	
4.8.1	No. of sources	One
4.8.2	Output Voltage Range	0 to 250V DC (Suitably rated to power up multiple IEDs, 0.5A @250V DC)
4.9	Timer	Automatic cut off of timer and injection with Binary Input Dry or Wet (0-250V) both should be available or convertible. Binary output should be high Speed with Breaking 10A Inductive load.
4.9.1	Range	0-9999sec
4.9.2	Resolution	1 milli sec
4.9.3	Accuracy	+ 0.02%
4.10	Binary Inputs	Two
4.11	Binary outputs	Two (10A, 250V AC/DC)
4.12	Over load protection	Automatic protection against current or thermal overload
4.13	Instrument Safety category	Safety Cat IV as per IEC 61010.
4.14	Emergency switch to stop the kit	Required
4.15	Dimensions	Specify the dimensions of test set (L x W x H)
4.16	Weight of test set	Should be less than 20 kg
4.16.1	Test Set	Specify the weight of test set
4.16.2	Complete package	Specify the weight of complete package i.e. test set and accessories along with carry case
4.17	Data Storage	At least 50 test results to be stored (should be retrievable through USB)
4.18	Accessories list	Set of 10 m long cable with clips
		Master earthing cable 10m long
		Mains cord 10 m long

Sr. No.	Descriptions	BSES Requirement
		PC interface communication cable
		Licensed PC interface software
		Hard as well as soft carrying case Original
		Instruction manual
4.19	Special Features (if any)	To be specified in detail by the manufacturer
4.20	Equipment Demonstration	Required
4.21	Training of use of equipment to be provided	Required
4.22	Test Certificate	Required
4.23	After Sales service support	Manufacturer must have own service center in India
4.24	Warranty Period	5 years

5.0 QUALITY ASSURANCE PLAN, INSPECTION AND TESTING

S No.	Parameters	Technical Requirements
5.1	Quality Assurance Plan	QAP Shall be submitted by vendor for approval. Inspection and testing of the material shall be carried out accordingly.
5.2	Type test	a) Single phase secondary injection kit must be of type tested as per relevant IS/IEC standard. b) Type test conducted either from CPRI/ERDA/NABL accredited Lab will be treated as valid.
5.3	Routine /Acceptance test	a) Visual inspection b) Dimension checks c) Product demonstration
5.4	Inspection	a) The buyer reserves the right to inspect material at the Seller's works at any time prior dispatch, to verify compliance with the specifications. b) Final inspection call intimation shall be given in 15 days advance to purchaser. c) In the event of any discrepancy in the test reports i.e. test reports not acceptable or any type tests (including special /additional tests, if any) not carried out, same shall be carried out without any cost implication to BSES before dispatch of equipment.

S No.	Parameters	Technical Requirements
5.5	Test certificates	Test certificates (routine and acceptance) and calibration report shall be submitted along with the dispatch documents.

6.0 PACKING, SHIPPING, HANDLING & SITE SUPPORT

6.1	Packing Protection	The packing shall be fit to withstand rough handling during transit and storage at destination. The material should be properly protected against corrosion, dampness & damage.
6.2	Handling & Storage	Manufacturer instruction shall be followed. Detailed handling & storage instruction sheet/manual needs to be furnished before commencement of supply.
6.3	Transit damage	The seller shall be responsible for any transit damage due to improper packing.
6.4	Packing Identification Label	On each packing case, following details are required:
6.4.1	Individual serial number	
6.4.2	Purchaser's name	
6.4.3	PO number and date	
6.4.4	Equipment Tag no.(if any)	
6.4.5	SAP item code	
6.4.6	Destination	
6.4.7	Manufacturer/Supplier's name	
6.4.8	Address of Manufacturer/Supplier/it’s agent	
6.4.9	Description	
6.4.10	Country of origin	
6.4.11	Month &year of Manufacturing	
6.4.12	Warranty period	
6.4.13	Case measurements	
6.4.14	Gross and net weight	
6.4.15	All necessary slinging and stacking instructions	
6.5	Shipping	The seller shall be responsible for all transit damage due to improper packing.
6.6	Handling and Storage	Manufacturer instruction shall be followed.

6.7	Detail handling & storage instruction sheet/manual to be furnished before commencement of supply.

7.0 DEVIATIONS

7.1	Deviation	Deviations from this Specification shall be stated in writing with the tender by reference to the Specification clause/GTP/Drawing and a description of the alternative offer. In absence of such a statement, it will be assumed that the bidder complies fully with this specification.

8.0 DOCUMENT SUBMISSION MATRIX

Document/Drawing submission shall be as per the matrix given below. All documents/drawings shall be provided in soft copy only. Language of the documents shall be English only. Incomplete submission shall be liable for rejection.

S No.	Description	Bid	Approval	Pre Dispatch
8.1	Detailed list (clearly specifying PO No. with date, PO Quantity & Year of supply) of your major customer utilities like NTPC, Power Grid, State Electricity Boards, etc. for last five years	Required		
8.2	Performance certificates	Required		
8.3	Relevant type test report/certificate from CPRI/ERDA/NABL	Required	Required	
8.4	Guaranteed Technical Particulars (GTP)	Required	Required	
8.5	Deviation Sheet, if any	Required	Required	
8.6	Dimensional drawing	Required	Required	
8.7	Product Catalogue	Required	Required	
8.8	Installation Instruction		Required	Required
8.9	Manufacturer’s quality assurance plan and certification for quality standards		Required	
8.9	Routine Test Certificates			Required
8.10	Calibration certificate			Required
8.11	Inspection and routine test reports, carried out in manufacturer’s works			Required

SCHEDULE – A

GENERAL PARTICULARS

(This shall from part of Technical Bid)

1.0 Bidder

1.1	Name	:	
1.2	Postal Address	:	
1.3	Telegraphic Address	:	
1.4	Telex number / Answer back code	:	
1.5	Phone(s)	:	
1.6	Name and Designation of the person who should be contacted in case of clarifications / details etc. not received expeditiously form the officer mentioned in item 1.6 above	:	
1.7	Brief write-up giving details of the organization, years of establishment and and commercial production activities, manufacturing, fabrication, shop testing, erection, testing, commissioning and after-sales service facilities, key personnel with their qualifications and experience, collaboration agreements, if any number of employees in various categories and last three (3) years turn over	:	
2.0	Bid Validity	:	
3.0	All the Schedules filled-in	:	Yes
4.0	All the Deviations brought out in Schedule – E1and E2	:	Yes
5.0	All the drawings, write-ups, literature, leaflets, calculations, details, etc as called for in the specification attached	:	Yes
6.0	Is the Bidder agreeable to undertake this contract, if deviations stipulated by him are not acceptable to the Purchaser	:	Yes/No

Schedules & Annexure **Schedule A**

Bidders Name : _____
Signature : _____
Name : _____
Designation : _____
Seal of Company Date : _____

SCHEDULE – B

LIST OF DRAWINGS ENCLOSED WITH BID

(This shall form part of Technical Bid)

S.No.	Drawing No	Title
1	2	3

Name of Firm : _____

Signature of Bidder : _____

Designation : _____

Date : _____

Seal of Company

SCHEDULE – C1

11KV INDOOR SWITCHGEAR

Sr. No.	Description	Incomer	Bus coupler	Outgoing	Capacitor	Transformer
1	**Switchgear assembly**					
1.1	Make					
1.2	Type					
1.3	Reference standard					
1.4	Voltage (normal / Max. KV)					
1.5	Frequency (HZ)					
1.6	Short circuit rating					
1.7	Short time current and duration					
A	Impulse withstand (KV peak)					
B	1min. Power freq. withstand test(KV rms)					
2	**Construction**					
2.1	Metal clad construction (Yes / No)					
2.2	Degree of Portion					
2.3	Minimum thickness of sheet metal used (mm)					
2.4	Draw out feature provided for					
A	Breaker with service, test & isolated position - Yes /No					
B	Voltage Transformer- Yes / No					
C	Protection relays -Yes /No					
2.5	Breaker cubicle					
A	Cubical door can be closed with breaker in test and isolated position -Yes / No					
B	Working zone units from floor level (mm)					
2.6	All meters, switchgear & relays flush mounted type -Yes /No					
2.7	Minimum clear space required					
A	Front for breaker withdrawal (mm)					

B	Rear (mm)					
2.8	Typical vertical section					
A	Overall dimensions					
	i. Length (mm)					
	ii. Breath (mm)					
	iii. Height (mm)					
B	Weight (Kg)					
3	**Bus Bar**					
3.1	Make					
3.2	Material & grade					
3.3	Reference standard					
3.4	Cross section area (mm2)					
3.5	Bus connection (joints)					
A	Silver plated -Yes /No					
B	Conventional made with anti oxide grease -Yes /No					
3.6	Rated continuous current amps					
3.7	Maximum temp. rise at rated continuous current DFG C					
3.8	Short time current and duration KA … secs					
3.9	DC resistance at 85 DEG C (Ω/m/Ø)					
3.10	Minimum clearance of bus bar and connection					
A	Phase to phase (mm)					
B	Phase to earth (mm)					
3.11	Bus bar provided with					
A	Insulation sleeve					
B	Phase barriers					
C	Cast resin shrouds for joint					
3.12	Bus bar supported spacing (mm)					
3.13	Bus bar insulators					
A	Make					
B	Type					
C	Reference standard					
D	Voltage class (KV)					
E	Min. creepage distance (mm)					
F	Cantilever strength Kg/mm2					
G	Net weight (Kg)					

4	**Circuit Breaker**					
4.1	Make					
4.2	Type					
4.3	Reference standard					
4.4	Related Voltage					
4.5	Related frequency					
4.6	Related current and its reference ambient temp					
A	Continuous current to limit the max. temp. rise to 55DEG C for silver plated connections and 40DEG C for conventional connections					
4.7	Related operating duty					
4.8	Symmetrical breaking capacity at rated voltage & operating duty KA rms.					
4.9	Rated making current (Kap)					
4.10	Short time current and duration KA … secs					
4.11	Insulation level					
A	Impulse voltage withstand on 1/50 full wave					
A	1min. Power freq. withstand test(KV rms)					
4.12	Maximum overvoltage factor while switching off					
A	Un loaded transformer					
B	Loaded transformer					
C	Un loaded CABLES					
D	Capacitor					
E	Motors					
4.13	Opening time max. No load condition (ms)					
4.14	Number of permissible breaker operation under vacuum loss					
4.15	At 100% breaking capacity					
A	Opening time Max. (ms)					
B	Arcing time max (ms)					
C	Total break time (ms)					
4.16						
A	Make time (Max) (ms)					
B	Total closing time (ms)					

4.17	Total length of contact travel (mm)					
4.18	No. of breaker operation permission without requiring inspection, replacement of contacts and other main parts.					
A	At 100% rated current					
B	At 100% rated breaking current					
4.19	Types of contents					
4.20	Maximum clearance in air (mm) from live part					
4.21	Between phases					
A	Between live parts and ground					
B	Type of arc control device provided					
4.22	Operating mechanism closing					
4.23	Type					
A	No. of breaker operations stored					
B	Trip free or fixed trip					
C	Anti pumping features provided					
4.24	Operating mechanism tripping					
A	Type					
B	No. of breaker operations stored					
C	Trip free or fixed trip					
D	Anti pumping features provided					
4.25	Spring charging motor					
A	Rating					
B	Make					
C	Voltage and permissible variation(%)					
4.26	Closing coil					
A	Voltage (V)					
B	Permissible voltage variation (%)					
C	Closing current at rated voltage (A)					
D	Power at rated voltage (w)					
4.27	Trapping Coil					

A	Voltage (V)					
B	Permissible voltage variation (%)					
C	Tripping current rated voltage (A)					
D	Power at rated voltage (w)					
4.28	Breaker / Accessories Accessories such as control switch indication lamps etc. furnished as specified. (Please attach separate sheet giving details of all Accessories, inter locks and safety shutters)					
A	Mechanical safety interlock					
B	Automatic safety interlock					
C	Operational interlock					
D	Emergency manual trip					
E	Operation counter					
F	Change / discharge indicator					
G	Manual spring charging facility					
H	Auxiliary switch with 6 No + 6 NC for owner's use					
I	Contacts wear indicator					
4.29	Auxiliary Switch					
A	Switch contacts type					
B	Contacts rating at					
	1) Make & Continuous (Amps)					
	2) Break (Inductive) (Amps)					
4.30	Net weighting of the breaker (Kg)					
4.31	Impact load foundation design (to include dead load plus impact value on opening at maximum interrupting rating) (Kg)					
4.32	On vacuum loss (Amps)					
A	Possible load current breaker (Amps)					
B	Possible fault current breaker (Amps)					
4.33	Overall dimensions					

A	Length (mm)					
B	Breath (mm)					
C	Height (mm)					
4.34	Type test report omidentical breaker furnished					
5	**Control & Indications**					
5.1	Push Button Make					
A	Type & Catalog No.					
B	Contact rating at 110V/220V.D.C					
C	Make & continuous (Amps)					
5.2	LED lamps: Make:					
A	Type & Catalog No.					
B	Watts /Voltage					
C	Lamps & lens replaceable from front with glass cover					
5.3	Selector switch: Make:					
A	Type & Catalog No.					
B	Contact rating					
C	Make & continuous (Amps)					
D	Break (Inductive)(Amps)					
6	**Current Transformer**					
6.1	Make					
6.2	Types & Voltage Level					
6.3	Reference standard					
6.4	C.T ratio as specified					
6.5	Short circuit withstand short time current for 1 sec. - KA rms Dynamic current -KA peak					
6.6	Class of insulation					
6.7	Temperature rise					
6.8	Basic insulation level					
6.9	For metering & protection					
A	CT ratio					
B	Class of accuracy					
C	Rated burden VA					
D	Knee point voltage V					
E	Excitation current at V_K / 4					
F	Rated saturating current Amp					
6.10	For differential & restricted earth fault protection					

A	CT ratio					
B	Class of accuracy					
C	Rated burden VA					
D	Knee point voltage V					
E	Excitation current at V_K / 4					
F	Rated saturating current Amp					
6.11	For restricted earth fault protection					
A	CT ratio					
B	Class of accuracy					
C	Rated burden VA					
D	Knee point voltage V					
E	Excitation current at V_K / 4					
F	Rated saturating current Amp					
G	Secondary resistance (Ω)					
6.12	For stand by earth fault protection					
A	CT ratio					
B	Class of accuracy					
C	Rated burden VA					
D	Knee point voltage V					
E	Excitation current at V_K / 4					
F	Rated saturating current Amp					
G	Over current rating continuous % over load (%)					
6.13	For sensitive by earth fault protection (CBCT)					
A	CT ratio					
B	Class of accuracy					
C	Rated burden VA					
D	Knee point voltage V					
E	Excitation current at V_K / 4					
F	Rated saturating current Amp					
G	Over current rating continuous % over load (%)					
7	**Potential Transformer**					
7.1	Make					
7.2	Types & Voltage Level					
7.3	Reference standard					

7.4	Voltage ratio					
7.5	Accuracy					
A	Corer-1					
B	Corer-2					
7.6	Rated burden					
A	Corer-1					
B	Corer-2					
7.7	Over voltage factor					
A	Continuous					
B	30 Seconds					
7.8	Class of insulation					
7.9	Temperature rise over ambient (^{0}C)					
7.10	Basic impulse level (KV peak)					
7.11	Winding connection					
A	Primary					
B	Secondary					
7.12	Fuses					
A	Continuous rating HV / LV (Amp)					
B	Symmetrical fault rating HV /LV KA rms					
C	Make					
7.13	Maximum ratio error at					
A	90% to 100% of rated voltage and 25% to 100% of rated secondary burden at unity power factor					
B	90% to 106% of rated voltage and 10% to 50% of rated secondary burden at 0.2 p.f.					
7.14	Maximum Phase difference at					
A	90% to 106% of rated voltage and 10% to 50% of rated secondary burden at 0.2 p.f.					
B	90% to 106% of rated voltage and 10% to 50% of rated secondary burden at 0.2 p.f.					
7.15	E=Weight (Kg)					
8	**Relay**					
8.1	Manufacture					
8.2	Model Type					

8.3	Draw out type with built in test facilities. Yes/ No					
8.4	Built in test facility Yes /No					
8.5	Type of mounting					
8.6	Reference standard					
8.7	All relays furnished as per drawing and specification					
8.8	All relevant relay leaflets and catalogue furnished					
8.9	Communication port type					
8.10	Auxiliary Supply					
8.11	Measurement and data acquisition feature					
8.12	Control and supervision					
A	IEC protocol					
B	Open protocol feature					
C	Programming facility					
D	Separate output for individual element					
E	Event recording facility number of events					
F	Required software offered					
8.13	C.T.secondary current					
8.14	Self diagnostic feature					
8.15	Modular design					
8.16	Relay details					
8.16.1	Over current					
A	Make					
B	Type					
C	Characteristic available					
D	Range of setting i. Current ii. Time					
E	Range of setting i. Current ii. Time					
F	Rated burden					
8.16.2	Synchronizing check relay					
A	Make					
B	Type					
C	Setting range					
8.16.3	Earth fault					
A	Make					
B	Type					
C	Characteristic available					

D	Range of setting i. Current ii. Time					
E	Rated burden					
8.16.4	Over current (Directional)					
A	Make					
B	Type					
C	Characteristic available					
D	Range of setting i. Current ii. Time					
E	Rated burden					
8.16.5	Earth fault (Directional) if applicable					
A	Make					
B	Type					
C	Characteristic available					
D	Range of setting i. Current ii. Time					
E	Rated burden					
8.16.6	Neutral unbalance relay					
A	Make					
B	Type					
C	Characteristic available					
D	Range of setting i. Current ii. Time					
E	Rated burden					
8.16.7	Under voltage relay					
A	Make					
B	Type					
C	Range of setting i. Current ii. Time					
D	Rated burden					
8.16.8	Over voltage relay					
A	Make					
B	Type					
C	Range of setting i. Current ii. Time					
D	Rated burden					
8.16.9	Busbar differential relay					
A	Make					

B	Type					
C	High impedance / low impedance					
D	Facility of CT radio adjustment possible through software. Yes / No					
E	CT supervision facility available. Yes /No					
8.16.10	Transformer differential relay					
A	Make					
B	Type					
C	High impedance / low impedance					
D	Facility of CT radio adjustment possible through software. Yes / No					
E	Facility of transformer vector group adjustment possible through software. Yes/ No					
F	Setting range					
G	Rated burden					
8.16.11	Restricted earth fault relay					
A	Make					
B	Type					
C	Combined with differential relay. Yes / No					
D	Setting range					
E	Rated burden					
8.16.12	Stand by earth fault relay					
A	Make					
B	Type					
C	Characteristics					
D	Setting range					
E	Rated burden					
9	**Meters**					
9.1	ammeter					
A	Make					
B	Type					
C	Reference standard					
D	Size					
E	Scale					
F	Accuracy class					
9.2	Voltmeter					
A	Make					

B	Type					
C	Reference standard					
D	Size					
E	Scale					
F	Accuracy class					
9.3	Energy Meter					
A	Make					
B	Type					
C	Reference standard					
D	Size					
E	Scale					
F	Accuracy class					
G	Measurement					
H	kWh					
I	kVARh					
J	kVAH					
K	Any Other					
L	Data stored capability					
M	Pulse output facility					
N	Data down loading facility					
10	**Secondary Wiring**					
10.1	Type of insulation					
10.2	Voltage grade					
10.3	Conductor material					
10.4	Conductor Size (minimum) and insulation wiring					
A	Potential circuit					
B	Control & current circuit					
11	**Terminal Block**					
11.1	Make					
11.2	Type					
11.3	Catalog No.					
11.4	20% spare terminal furnished					
12	**Cable Termination**					
12.1	Clearance for power cable termination					
12.2	Removable gland plate					
A	Material for multicore cable					
B	Material for single core cable					
C	Thickness of plate					
13	**Name Plate**					
13.1	Material					

13.2	Thickness					
13.3	Size for					
A	Breaker cubicle					
B	Instrument / devices					
14	**Space heater / plug socket**					
14.1	Cubicle heater					
A	Thermostat controlled					
B	Wattage					
C	Voltage					
D	Resistance (ohms)					
E	Thermostat range					
14.2	Plug Socket					
A	Type					
B	Rating					
14.3	Cubical heater & plug socket circuit provided with MCB's					
15	**A.C. /D.C. Supply**					
15.1	Isolated switches for incoming supply					
A	A.C. Type & rating					
B	D.C. Type & rating					
15.2	Isolated switches at each cubicle					
A	A.C. Supply type & rating					
B	D.C. Supply type & rating					
16	**Tropical Protection**					
16.1	Any Special treatment for tropical protection					
17	**Painting**					
17.1	Finish of switchgear					
A	Inside					
B	Outside					
18	**No. of Accessories furnished**					
A	Breaker lifting & handling trolley					
B	Any other					
19	**Tests**					
19.1	Reference standard					
19.2	Routine test to be performed on switchgear					
19.3	Type test certificates submitted					
20	**Drawing / Data**					

20.1	General arrangement for panel board					
20.2	Foundation Panel					
20.3	Bill of material					
20.4	Cross sectional drawing for every type of switchgear (Add sheets if necessary)					

Bidders Name : _____

Signature : _____

Name : _____

Designation : _____

Seal of Company Date : _____

SCHEDULE – C2

POWER TRANSFORMER

Sr.No.	Particular	Specified / Required	Offered
1.0	General		
1.1	Make		
1.2	Type	As per Annexure C of specification	
2.0	Nominal continuous rating, KVA		
2.1	HV winding	As per Annexure C of specification	
2.2	LV winding	As per Annexure C of specification	
2.3	Type of Cooling	ONAN/ONAF	
2.4	Rating available at different cooling	ONAN - 80% ONAF-100%	
3.0	Rated voltage (KV)		
3.1	HV winding	As per Annexure C of specification	
3.2	LV winding	As per Annexure C of specification	
4.0	Rated current (Amps)		
4.1	HV winding		
4.2	LV winding		
5.0	Connections		
5.1	HV winding	As per Annexure C of specification	
5.2	LV winding	As per Annexure C of specification	
5.3	Vector group reference	As per Annexure C of specification	
6.0	Impedance at principal tap rated current and frequency at 75 °C with 100 % Rating (%)		
6.1	Impedance (%)	As per Annexure C of specification	
6.2	Reactance (%)		
6.3	Resistance (%)		
6.4	Impedance at lowest tap rated current and frequency at 75 °C with 100 % Rating (%)		
6.5	Impedance at highest tap rated current and frequency at 75 °C with 100 % Rating (%)		
7.0	Resistance of the winding at 75^{0}Cat principal tap (ohm)		
7.1	a) HV		

7.2	b)LV		
8.0	Zero sequence impedance (ohm)		
8.1	a) HV		
8.2	b) LV		
9.0	Guaranteed maximum losses at principal tap at full load and 75^0 C without any positive tolerance kW		
9.1	No load losses (max.)	As per Annexure C of specification	
9.2	Load losses (max.)	As per Annexure C of specification	
9.3	Cooler fan losses (max.)		
9.4	Total I^2R losses of winding @ 75 deg C		
9.5	Total stray losses @ 75 deg C		
9.6	Total Load losses (max.)		
9.7	No load loss at maximum permissible voltage and frequency (approx.) kW		
10.0	Temperature rise over reference design ambient of 40 ^{0}C		
10.1	Top oil by thermometer ^{0}C	40^0 C	
10.2	Winding by thermometer ^{0}C	45^0 C	
10.3	Winding gradient at rated current ^{0}C		
10.3.1	HV		
10.3.2	LV		
11.0	Efficiency		
11.1	Efficiency at 75^0 C and unity power factor %		
11.1.1	At 110% load		
11.1.2	At 100% load		
11.1.3	At 80% load		
11.1.4	At 60% load		
11.1.5	At 40% load		
11.1.6	At 20% load		
11.2	Efficiency at 75^0 C and 0.8 power factor lag %		
11.2.1	At 110% load		
11.2.2	At 100% load		
11.2.3	At 80% load		
11.2.4	At 60% load		
11.2.5	At 40% load		
11.2.6	At 20% load		
11.3	Maximum efficiency %		
11.4	Load and power factor at which Max efficiency occurs		
12.0	Regulation (%)		
12.1	Regulation at full load at 75^0 C		
12.1.1	At unity power factor		
12.1.2	At 0.8 power factor lagging		
12.2	Regulation at 110% load at 75^0 C		
12.2.1	At unity power factor		
12.2.2	At 0.8 power factor lagging		

13.0	Tapping		
13.1	Type		
13.2	Capacity		
13.3	Range-steps x % variation	As per Annexure C of specification	
13.4	Taps provided on HV winding (Yes/No)		
14.0	OLTC gear		
14.1	Make		
14.2	Type		
14.3	Reference std		
14.4	No of compartment		
14.5	Mounting arrangement	Side mounted	
14.6	Rated current Amp		
14.7	Rated step capacity, kVA		
14.8	Short circuit withstand for 2 secs, kA		
14.9	Time required for one step change sec.		
14.10	Rated voltage for motor, V AC		
14.11	Rating of motor		
14.12	Rated voltage for auxiliaries V		
14.13	Consumption of auxiliaries		
14.14	OLTC features as per specification, Yes/No		
14.15	Does the overload rating of OLTC match with that of the transformer under all conditions Yes/No		
15.0	Transformer Monitoring relay – REGDA		
15.1	Make		
15.2	Reference standard		
15.3	Overall dimensions, mm		
16.0	Cooling system		
16.1	Type of cooling	As per Annexure C of specification	
16.2	No. of cooling unit groups		
16.3	Capacity of cooling units		
16.4	Mounting of radiators		
16.5	Number of radiators and Size		
16.6	Type & size of radiator header main valve		
16.7	Type & size of individual radiator valve		
16.8	Total radiating surface, sq mm		
16.9	Thickness of radiator tubes, mm	Minimum 1.2 mm	
16.10	Schematic flow diagram of the cooling system furnished (Yes/No)		
16.11	Type and make of Fan motor		
16.12	No. of fan motor per bank (Working + Standby)		
16.13	Rated Power Input (kW)		
16.14	Rated Voltage, Speed of Motor		
16.15	Efficiency of motor at Full load(%)		
16.16	Locked Rotor current(Amps)		
17.0	Details of tank		

17.1	Material	Robust mild steel plate without pitting and low carbon content	
17.2	Thickness of sides mm		
17.3	Thickness of bottom mm		
17.4	Thickness of cover mm		
17.5	Confirmation of tank designed and tested for vacuum pressure (Ref: CBIP manual) (Yes/No)		
17.5.1	Vacuum mm of Hg. / (kN/m^2)	As per CBIP	
17.5.2	Pressure mm of Hg	Twice the normal head of oil / normal pressure + 35 kN/m^2 whichever is lower , As per CBIP	
17.6	Is the tank lid slopped?	Yes	
17.7	Inspection cover provided (Yes/No)	As per clause No 3.2.1.5	
17.8	Location of inspection cover (Yes/No)	As per clause No 3.2.1.5	
17.9	Min. dimensions of inspection cover (provide list of all inspection cover with dimension), mm x mm		
18.0	Core		
18.1	Type:	Core	
18.2	Core material grade	Premium grade minimum M4 or better	
18.3	Thickness of lamination mm	Max. 0.27 mm with insulating coating on both sides	
18.4	Insulation between core lamination		
18.5	Design flux density of the core at rated condition at principal tap, Tesla		
18.6	Maximum flux density allowed in the core at extreme over excitation / over fluxing , Tesla		
18.7	Equivalent cross section area of core, mm^2		
18.8	Guaranteed No load current at 90% / 100% / 110% rated voltage & frequency (Amp)		
18.8.1	HV		
18.8.2	LV		
19.0	Type of winding		
19.1	HV		
19.2	LV		
19.3	Conductor material	Electrolytic copper as per relevant standard	
19.4	Maximum current density allowed, Amp per mm^2	3.0 A/ mm^2	
19.5	Gauge/area of cross section of conductor, mm^2		
19.5.1	HV		
19.5.2	LV		

19.6	Maximum current density achieved in winding (LV/HV/HVT) – Amps/ mm^2		
19.7	Insulating material		
19.7.1	HV turn		
19.7.2	LV turn		
19.7.3	LV- core		
19.7.4	HV-LV		
19.8	Insulating material thickness, mm		
19.8.1	HV turn		
19.8.2	LV turn	-	
19.8.3	LV to core		
19.8.4	HV to LV		
20.0	Minimum design clearance , mm		
20.1	HV to earth in air		
20.2	HV to earth in oil		
20.3	LV to earth in air		
20.4	LV to earth in oil	-	
20.5	Between HV & LV in Air		
20.6	Between HV & LV in oil		
20.7	Top winding and yoke	-	
20.8	Bottom winding and yoke		
21.0	Insulating oil		
21.1	Quantity of oil Ltrs	-	
21.1.1	In the transformer tank		
21.1.2	In each radiator		
21.1.3	In OLTC chamber		
21.1.4	Total quantity		
21.2	10% excess oil furnished?	Yes	
21.3	Type of oil	New insulating oil as per IS: 335, and Cl. 4.2.7 of the specification	
21.4	Oil preservation system provided (Yes/No)	As per Annexure C of specification	
22.0	Bushing		
22.1	Make		
22.2	Type		
22.3	Reference standard		
22.4	Voltage class, kV		
22.4.1	HV side bushing		
22.4.2	LV side line and neutral bushing		
22.5	Creepage factor for all bushing mm / kV	As per Annexure C of specification	
22.6	Rated current , Amp		
22.6.1	HV bushing		
22.6.2	LV line and neutral bushing		
22.7	Rated thermal short current		
22.7.1	HV bushing	As per Annexure C of specification	
22.7.2	LV line and neutral bushing	As per Annexure C of	

		specification	
22.8	Weight Kg		
22.8.1	HV bushing		
22.8.2	LV line and neutral bushing		
22.9	Free space required for bushing removal, mm		
22.9.1	HV bushing		
22.9.2	LV line and neutral bushing		
23.0	Terminal connections		
23.1	HV	As per Annexure C of specification	
23.2	LV	As per Annexure C of specification	
23.3	LV Neutral	As per Annexure C of specification	
24.0	H.V. Cable box/Terminals		
24.1	Suitable for cable/conductor type size	As per Annexure C of specification	
24.2	Termination height , mm	1000 mm , minimum	
24.3	Gland plate dimension mm x mm		
24.4	Gland plate material	Aluminum	
24.5	Gland plate thickness , mm	5 mm minimum	
24.5	Phase to clearance inside box / terminals , mm		
24.6	Phase to earth inside box / terminals , mm		
25.0	L.V line side cable box		
25.1	Suitable for cable type , size	As per Annexure C of specification	
25.2	Termination height , mm	1000 mm , minimum	
25.3	Gland plate dimension mm x mm		
25.4	Gland plate material	Aluminum	
25.5	Gland plate thickness , mm	5 mm minimum	
25.6	Phase to clearance inside box / terminals , mm		
25.7	Phase to earth inside box , mm		
26.0	LV Neutral cable box		
26.1	Suitable for cable type , size	As per Annexure C of specification	
26.2	Termination height , mm		
26.3	Gland plate dimension mm x mm		
26.4	Gland plate material	Aluminum	
26.5	Gland plate thickness , mm	5 mm minimum	
26.6	Phase to clearance inside box , mm		
26.7	Phase to earth inside box , mm		
27.0	Marshalling box cubical provided as per clause no. of spec. (Yes / no)		
27.1	Mounting of marshalling box	Project specific to be filled up (Separate / tank mounted)	

28.0	Neutral Current Transformer (NCT)			
28.1	Type			
28.2	Make			
28.3	Reference standard			
28.4	CT Ratios			
28.5	Burden ,VA			
28.6	Class of Accuracy	PS	5P20	
28.7	KPV , volts , minimum			
28.8	Resistance, ohm @ 75 deg C, maximum			
28.9	Magnetizing current @ Vk/4 , mA , maximum			
28.10	Short time withstand current	26.3 kA for 3 sec.		
29.0	Winding current transformer (WCT)			
29.1	Type			
29.2	Make			
29.3	Reference standard			
29.4	CT ratio			
29.5	Burden ,VA	Manufacturer Std.		
29.6	Class of accuracy	Manufacturer Std.		
30.0	Pressure release device			
30.1	Minimum pressure the device is set to rupture			
30.1.1	For main tank			
30.1.2	For OLTC			
31.0	Alarm and trip contact ratings of protective devices			
31.1	Rated/making/ breaking currents , Amp @ voltage for			
31.1.1	PRV for main tank			
31.1.2	PRV for OLTC			
31.1.3	Buchholz relay			
31.1.4	Oil surge relay for OLTC			
31.1.5	Sudden pressure relay			
31.1.6	OTI			
31.1.7	WTI			
31.1.8	Magnetic oil gauge			
32.0	Fittings accessories each transformer furnished as per clause No. (Bidder shall attach separate sheet giving details, make and bill of materials)			
33.0	Painting: as per clause for the transformer , cable boxes, radiator, marshalling box, RTCC etc (Yes/No)			
34.0	Over all transformer dimensions			
34.1	Length , mm	6.5 meters maximum allowed		
34.2	Breadth , mm	5.0 meters maximum allowed		
34.3	Height , mm	5.0 meters maximum		

		allowed	
35.0	Transformer tank dimensions		
35.1	Length , mm		
35.2	Breadth , mm		
35.3	Height , mm		
36.0	Marshalling box dimensions		
36.1	Length , mm		
36.2	Breadth , mm		
36.3	Height , mm		
37.0	Weight data		
37.1	Core, kG		
37.2	Frame parts, kG		
37.3	Core and frame, kG		
37.4	Total winding, kG		
37.5	Core and frame winding, kG		
37.6	Tank, kG		
37.7	Tank lid, kG		
37.8	Empty conservator tank , kG		
37.9	Each radiator empty , kG		
37.10	Total weight of all radiator empty , kG		
37.11	Weight of oil in tank , kG		
37.12	Weight of oil in each conservator , kG		
37.13	Weight of oil in each radiators , kG		
37.14	Total weight of oil in radiator , kG		
37.15	OLTC gear including oil , kG		
37.16	Total transport weight of the transformer , kG		
37.17	Total transport weight of the transformer with OLTC and all accessories		
38.0	Volume data		
38.1	Volume of oil in main tank , liters		
38.2	Volume of oil between highest and lowest levels of main conservator ,liters		
38.3	Volume of oil between highest and lowest levels of OLTC conservator, liters		
38.4	Volume of oil in each radiator , liters		
38.5	Total volume of oil in radiators , liters		
38.6	Volume of oil in OLTC , liters		
38.7	Transformer total oil volume , liters		
39.0	Shipping data		
39.1	Weight of heaviest package, kG		
39.2	Dimensions of the largest package (L x B x H) mm		
40.0	Tests		
40.1	All in process tests confirmed as per Cl. (Yes /No)		
40.2	All types tests confirmed as per Cl. (Yes /No)		
40.3	All in routine tests confirmed as per Cl.		

	(Yes /No)		
40.4	All in special tests confirmed as per Cl. (Yes /No)		

Bidders Name : _____

Signature : _____

Name : _____

Designation : _____

Seal of Company Date : _____

SCHEDULE – C3

BATTERY CHARGER

Sr. No.	Description	Data to be filled by manufacturer
1	Manufacturer equipment type	
2	Conformance to design standards as per specification Yes / No	
3	Conformance to design features as per specification Yes / No	
4	Submitted to deviation sheet for each specification clause no - Yes / No	
5	Panel dimension in mm (length x depth x height)	
6	Panel weight in kg	
7	Panel enclosure protection offered	
8	Voltage regulation as per specification (value to be specified)	
9	Boost charging DC current adjustment range (Value to be specified)	
10	Amount of Ripple in DC in % - output with battery - without battery	
11	Charger efficiency offered	
12	Max temperature rise above ambient	
13	Power factor at rated load	
14	Rectifier bridge as per specification	
15	Heat generated by the panel in Kw	
16	AC MCCB - Make , rating	
17	DC MCCB - Make , rating	
18	Rectifier transformer - Make , rating	
19	Semiconductor rectifier - Make , rating	
20	DC conductor - Make , rating	
21.1	DCDB integral part of charger or separate?	
21.2	MCB for DC distribution boards - Make, rating	
22	Conformance to metering & indication as per specification	
23	Conformance to make of component as per specification	
24	Conformance to mimic diagram, labels & finish as per specification	
25	Submission of component catalogue - Yes / No	
26	DC charger nominal output current - (battery trickle charge + DC load)	
27	DC charger boost charge current	

28	DC battery	
29	DC battery duty cycle	

Bidders Name : _____

Signature : _____

Name : _____

Designation : _____

Seal of Company Date : _____

Annexure C Guaranteed Technical Particulars (Data by Supplier)

Sr. No.	Description	Data to be filled by Manufacturer
1	Battery (as per scope of supply annexure A) – Yes/No	
2	Manufacturer battery type	
3	Conformance to design standards as per specification clause no 2.0 – Yes/No	
4	Conformance to design features as per specification clause no 3.0 & 4.0 – Yes/No	
5	Submission of deviation sheet for each specification clause no – Yes/No	
6.1	Battery GA drawing submitted – Yes/No	
6.2	Battery selection / sizing calculation submitted – Yes/No	
7	Battery rating (C5) offered in Ahr	
7.1	Rating at temperature 27 deg C as per IS	
7.2	Rating at temperature 20 deg C as per IEC	
8.1	Battery rack type offered - steel or FRP	
8.2	Number of steps in a tier	
8.3	Number of tier in rack	
9	Battery bank dimensions in mm (length x depth x height)	
10	Battery cell weight in kg	
11	Battery cell anode - no. of plates & thickness in mm	
12	Battery cell cathode - no of plates & thickness in mm	
13.1	Battery cell nominal voltage	
13.2	Battery cell float charge voltage	
14	Battery cell maximum boost charge voltage	
15	Battery cell end cell voltage	

16	Total battery bank float charging voltage required in volts	
17.1	Total battery bank boost charging voltage required in volts	
17.2	Total time required for boost charging from end cell voltage to rated voltage / capacity	
18	Battery internal resistance (in Ohms) at fully charged condition	
19	Heat generated by battery at rated full load (in Kw)	
20	Electrolyte chemical name	
21	Electrolyte specific gravity at 27 deg C	
22	Recommended topping up frequency (in weeks or months)	
23	Amount of gas evolution in one full charge discharge cycle (in litre / Ahr)	
24	Type of separators used in battery cell	
25	Shelf life period (to retain 90% of energy from full charge condition at 27 deg C)	
26	Total battery bank short circuit fault level (in KA)	
27	Battery bank terminal bus bar with insulating shrouds – Yes/no	

SCHEDULE – C6

11kV AUTO-SWITCHED CAPACITOR BANK

S.No.	Description	
1	Manufacturer equipment type/make	
2	Conformance to design standards as per	
	specification Yes/No	
	- Capacitor Unit	
	- Series Reactor	
	- LA	
	- Isolator	
	- NCT	
3	Conformance to capacitor design requirements as per specification clause no.3.0 to 7.0 - Yes/No	
4	Submission of deviation sheet for each specification clause no. -Yes/No	
5	APP type capacitors offered?	
6	Capacitor bank arrangement / scheme conforming to specification?	
7	Capacitor bank (3 phase system)	
7.1	Capacitor bank (Rated capacitance at 50Hz)	
7.2	Capacitor bank rated voltage – 12Kv	
7.3	Capacitor bank KVAR at 11kV	
7.4	Capacitor bank KVAR at 12kV	
7.5	Capacitor bank line current at rated voltage, continuous operation	
7.6	Designed short circuit withstand capacity for 3sec	
7.7.1	Capacitor bank insulation level at 50Hz	

7.7.2	Capacitor bank impulse voltage withstand	
7.8	One spare single phase capacitor unit offered?	
8	**Capacitor single phase unit**	
8.1	Capacitor single unit capacitance at 50Hz	
8.2	Capacitor single unit rated operating voltage	
8.3	Capacitor KVAR (at rated voltage)	
8.4	Capacitor single unit continuous operating rated current	
8.5	Designed short circuit withstand capacity of single capacitor unit for 3sec	
8.6	Capacitor unit temperature category (required +5/ C)	
9	**Single capacitor unit construction**	
9.1	Enclosure sheet metal CRCA	
9.2	Enclosure sheet metal thickness in mm	
9.3	Hermetic sealing method (pressure welding/gas welding/sealant/ if any other pl. specify)	
9.4	Dimensions of a single capacitor unit	
	Height	
	Length	
	Width	
9.5	Weight of a single capacitor unit	
9.6	Single capacitor unit bushings	
	Type of insulator	
	Creepage distance	
	Clearance between two terminals	
9.7	No. of series group/unit	
9.8	No. of parallel elements/ series group	
9.9	No. of APP layers -double/triple	

9.10	Thickness of APP film	
9.11	Width of APP film	
9.12	Thickness of Al foil	
9.13	Width of Al foil	
9.14	Active width of Al foil	
9.15	Maximum voltage stress per APP layer	
9.16	Element connection method	
9.17	Discharge device	
10	Capacitor bank maximum permissible over voltage	
11	Capacitor power loss at rated voltage	
12	Capacitor tan delta (Tangent of power loss angle) at maximum operating conditions	
13	Guaranteed temperature rise of capacitor above ambient temperature	
14.1	Type of discharge device – internal resistor	
14.2	Discharge device material	
14.3	Value of discharge device	
14.4	Discharge time required to attain residual voltage equal to 50 volts	
15	Capacitor bank overall dimensions	
	Height x Length x Width	
16	Capacitor bank total weight	
17	Capacitor bank clearances	
	i)Phase to Phase	
	ii)Phase to neutral	
	iii)Phase to earth	
18	Tinned copper Bus bar cross-section in sq. mm	

19	Tinned copper Bus bar continuous rating	
20	Bus bar short time withstand capacity in kA for 3sec	
21	Flexible tinned copper connector rating	
22.1	Bus bar support insulator make & type	
22.2	Bus bar support insulator voltage class	
23	Bus bar provided with insulating sleeve and phase barriers?	
24	**Neutral Current transformer**	
24.1	Neutral current transformer make	
24.2	Neutral current transformer outdoor type	
24.3	Cast resin type NCT offered?	
24.4	Neutral current transformer ratio	
24.5	Neutral current transformer accuracy class (0.5 & 5P10min)	
24.6	Neutral current transformer rating(10 & 15VA)	
24.7	Neutral current transformer terminal box ingress protection (IP55min)	
24.8	**Residual Voltage Transformer**	
25	**Series Reactor**	
25.1	Series reactor make	
25.2	Continuous current rating of series reactor	
25.3	Series reactor kVAr rating per phase per star	
25.4	Series reactor rated voltage	
25.5	Type –dry air cooled	
25.6	Short time withstand current capacity for 3sec (min 16 times capacitor rated current at 130% rated voltage)	
25.7	Series reactor single phase unit connected between single phase capacitor units and neural star pint	

25.8	Series reactor power frequency withstand voltage 28Kv MIN	
25.9	Series reactor lightening impulse withstand voltage 75kv min	
26	**Lightning Arrestor**	
26.1	Name of manufacturer	
26.2	Type – Gapless ZnO	
26.3	Rated voltage	
26.4	Nominal Discharge Current	
26.5	Class - III	
26.6	Insulation withstand voltage	
26.7	Crrepage distance	
27	**Vacuum Contactor / switch for Auto Switching**	
27.1	Rated Voltages	
27.2	Rated Continuous Current	
27.3	Rated Capacitor Switching Current	
27.4	Frequency	
27.5	Control supply	
27.6	Type	
27.8	Installation	
27.9	Mechanical Endurance	
27.10	Electrical Endurance	
27.11	Mechanical Indicator	
27.12	Trip lever	
27.13	Closing lever	
28	**Isolator**	

28.1	Name of manufacturer	
28.2	Isolator ratings	
28.3	Type of operation	
28.4	Type	
28.5	Operating mechanism	
28.6	Voltage rating	
28.7	Rated current	
28.8	No.of poles	
28.9	Rated short time current	
28.10	Type of mounting	
28.11	Construction	
28.12	Earth switch provided	
28.13	Auxiliary contacts provided	
28.14	Electrical interlocks	
28.15	Mechanical interlocks	
28.16	Creepage distance	
28.17	Insulation level - Power frequency hstand Voltage - Impulse withstand voltage	
28.18		
	Terminal arrangement a) Incoming suitable for b) Outgoing suitable for	
28.19	Overload capacity	
28.20	Control voltage	
29	Name plate and labels as per specification?	

30	Painting of capacitor and mesh enclosure	
30.1	Shade RAL 7032	
30.2	Material – Pure polyester grade A	
30.3	Minimum thickness (80 microns)	
31	Power cable terminal suitable for 3CX300Sqmm XLPE HT	
32	Space provided for future capacity	

Bidders Name : _____
Signature : _____
Name : _____
Designation : _____
Seal of Company Date : _____

SCHEDULE – C7

LT POWER CABLES

For each size / rating separate GTP need to be furnished.			
S.No.	**Description**	**Buyer's requirement**	**Seller's Data**
1	Make	……	
2	Type (AS PER IS)	A2XFY (Multicore)	
3	Voltage Grade (KV)	1.1	
4	Maximum conductor temperature		
A	Continuous (^{0} C)	90 ^{0}C	
B	Short time (^{0} C)	250 ^{0}C	
5	Conductor		
A	Size (mm^2)	4CX300,4CX50, 4CX25, 4CX10 & 2CX10 Sqmm	
B	No. of wire in each conductors Nos.	As per Manufacturer standard	
C	Dia of wires in each conductors before compaction (mm)	As per Manufacturer standard	
D	Shape of conductor	As per specification	
E	Diameter over conductor (mm)	……	
F	Maximum conductor resistance at 20^0 C (ohm / km)	As per table 2 of IS -7098 Part -1	
6	Insulation		
A	Nominal thickness (mm)	As per table 3 of IS -7098 Part -1	
B	Minimum thickness (mm)	……	
C	Diameter over insulation (mm) Approx	……	
7	Inner Sheath		
A	Minimum thickness	As per table 5 of IS -7098 Part -1	
B	Approx dia over sheath (mm) Approx	……	
8	Galvanized steel Armour	As per table 6 of IS -7098 Part -1	
A	Number of strips	As per manufacturer Std.	
B	Size (Thickness X width) in mm	0.8 x 4	
C	Dia of wire for 2CX10sqmm	1.4mm Min	
D	Dia over Armour -Approx	……	
9	Outer Sheath	As per table 8 of IS -7098 Part -1	
A	Thickness (Minimum)		
B	Colour	Yellow	
C	Weather proof paint (applicable for 2c x 10 sqmm and 4c x 10 sqmm only)	……	
10	Approx. overall dia (mm)	……	
11	End Cap	Required	
12	Continuous current rating for standard I.S. condition laid Direct		

	a. In ground 30 ^{0}C Amps	……	
	a. In duct 30 ^{0}C Amps	……	
	a. In air 40 ^{0}C Amps	……	
13	Short circuit current for 1 sec of conductor (KAmp)	……	
14	Electrical Parameters at Maximum operating temperature		
A	Resistance (Ohm / Km) (AC Resistance)	……	
B	Resistance AT 50 C/s (Ohm / Km)	……	
C	Impedance (Ohm / Km)	……	
D	Capacitance (Micro farad /Km)	……	
15	Recommended minimum bending radius	…….. X O/D	
16	De-rating factor for following Ambient Temperature in	Ground /Air	
	a. At 30 ^{O}C		
	a. At 35 ^{O}C		
	a. At 40 ^{O}C		
	a. At 45 ^{O}C		
	a. At 50 ^{O}C		
17	Group factor for following Nos. of cables laid	Touching Trefoil	
A	3 Nos.		
B	4 Nos.		
C	5 Nos.		
D	6 Nos.		
18	Process of cross linking of polyethylene	Dry cure	

Bidders Name : _____

Signature : _____

Name : _____

Designation : _____

Seal of Company Date : _____

SCHEDULE – C8

CONTROL CABLES

Sr.	Description	Buyer's requirement	Seller's Data
	Purchase Req. No.	….	
	Guarantee Period: 5 Years	60/66 Months	
1.0	Make	….	
2.0	Type (AS PER IS 1554 part -1)	YWY	
3.0	Voltage Grade (KV)	1.1	
4.0	Maximum Conductor temperature		
A	Continuous (° C)	70°C	
B	Short time (° C)	160°C	
5.0	Conductor		
A	Size (mm2)	2.5 / 4 sq mm	
B	No. of wires in each conductor Nos.	As per Manufacturer standard	
C	Dia. of wires in each conductor before compaction (mm)	As per Manufacturer standard	
D	Shape of Conductor	As per Cl.2.1.1 of specification	
E	Diameter over conductor mm	….	
F	Maximum Conductor resistance at 20 ° C (Ohm/Km)	As per Table 2 of IS 8130	
6.0	Insulation	As per Table 1 of IS:5831 – 1984	
A	Nominal thickness (mm)	As per Cl.2.1.2 of specification & Table 2 of IS 1554(Part-1)	
B	Minimum thickness (mm)		
C	Core Identification	Color of all the cores shall be different	
D	Diameter over Insulation (mm) Approx.	….	

7.0	Inner Sheath	As per Table 2 of IS:5831 – 1984	
A	Minimum thickness (mm)	As per Table 4 of IS 1554(Part-1)	
B	Approx. dia. Over sheath (mm)- Apprx.	….	
8.0	Galvanized Steel Armour	As per Cl 2.1.5 of specification	
A	Number of armour wire	As per Manufacturer Std.	
B	nal Dia of Round Wire	As per Table 5 of IS 1554(Part-1)	
C	Dia. over Armour – Approx.	….	
D	Lay Ratio	….	
E	Confirm minimum 90% coverage (submit calculation)		
9.0	Outer Sheath (FRLS)	As per Table 2 of IS:5831 – 1984	
A	Thickness (Minimum)	As per Table 7 of IS 1554(Part-1)	
B	Color	Black	
10.0	Approx. overall dia. (mm)	….	
11.0	Drum Length & tolerance	As per Spec.Cl. 6.0.0	
12.0	End Cap	Required	
13.0	Drums provide with MS Spindle plate & Nut bolts arrangement	Required	
14.0	Net Weight of cable (Kg/Km.) – Approx.	….	

15.0	Continuous current rating for standard I.S. condition laid Direct		
	a) In ground 30° C Amps	….	
	b) In duct 30° C Amps	….	
	c) In Air 40° C Amps	….	
16.0	Short circuit current for 1 sec of conductor. (KAmp)	….	
17.0	Electrical Parameters at Maximum Operating temperature:		
A	Resistance (Ohm/Km) (AC Resistance)	….	
B	Reactance at 50 C/s (Ohm/Km)	….	
C	Impedance (Ohm/Km)	….	
D	Capacitance (Micro farad / KM)	….	
18.0	Recommended minimum bending radius	…. x O/D	
19.0	FRLS Properties		
	i) Oxygen Index		
	ii) Temperature Index		
	iii) Max Acid Gas Generation		
	iv) Light Transmission / Smoke Density		

Bidders Name : _____

Signature : _____

Name : _____

Designation : _____

Seal of Company Date : _____

SCHEDULE – C9

ILLUMINATION SYSTEM

1	**General**			
+1.01	Make			
*1.02	Applicable Standards			
*1.03	Degree of protection			
2	**Lighting Panel /Feeder Pillarm Box (LP/ELP/DLP/FPB/EPB/LDB/ELDB/ Construction Features)**			
2.01	Make			
2.02	Rated Value (V)			
*2.03	Busbar continuous current rating (A)			
*2.04	Busbar material and cross section	1	2	3
3	**Minimum current breakers :**			
+3.01	Service			
3.02	Make			
+3.03	Type			
*3.04	No. of poles			
*3.05	Rated continuous current (A)			
*3.06	Short time current rating (Ka)			
*3.07	Related Voltage (V)			
*3.08	Breaking Current (Ka)			
4	**Load Breaking Switches**			
4.01	Service			
+4.02	Make			
+4.03	Type			
*4.04	No. of poles			
*4.05	Related Voltage (V)			
*4.06	Rated continuous current (A)			
*4.07	Rated making current (Ka peak)			
*4.08	Rated breaking current (Ka)			
*4.09	Rated short time one (1) second current (Ka)			
*4.10	Rated dynamic current (kApeak)			
5	**Fuses**			
5.01	Service			
+5.02	Make			
*5.03	Type			
*5.04	Standard applicable			
*5.05	Related Voltage (V)			
*5.06	Rated current (A)			
*5.07	Fusing factor			

*5.08	Category of duty			
*5.09	Rupturing capacity (prospective current) (Ka)			
6	**Earth Leakage current Breaker**			
+6.01	Make			
+6.02	Type			
*6.03	No. of poles			
*6.04	Rated continuous current (A)			
6.05	Short time current rating (Ka)			
6.06	Rated Tripping current			
7	**Lighting Fixtures**	Type A	B	C
+7.01	Manufacturer			
+7.02	Type			
7.03	Description of different types			
*7.04	Type and wattage of lamp			
*7.05	Rated life of the lamp			
*7.06	Applicable standards			
	Note:- In case luminaries other than the ones specified in specification are offered, all the deviations shall be listed out otherwise these shall be considered as being fully in line with luminaries specified.			
8	**Receptacles with Switches**	1	2	3
+8.01	Make			
+8.02	Type			
+8.03	Related Voltage (V)			
*8.04	Rated current (A)			
8.05	Technical brochures (Attach brochures and state brochure Nos.)			
9	**Cables / Wire**	1	2	3
9.01	Service			
+9.02	Make			
+9.03	Type			
*9.04	Voltage Grade (V)			
*9.05	Conductor Material			
*9.06	Size of conductors (mm^2)			
*9.07	Current rating of conductors (A)			
9.08	Applicable Standards			
10	**Conduits and Accessories**			
10.01	Make			
10.02	Type			
10.03	Material			
10.04	Applicable Standards			
11	**Lamp and Luminaries**	Incandescent Lamps	Fluorescent Tubes	HPSV Lamps
11.01	Make			

11.02	Type			
*11.03	Lumen output throughout life (Lumen)			
*11.04	Derating factor due to temperature			
*11.05	Derating factor due to aging			
12	**Lighting Poles / Towers**			
12.01	Manufacturer			
12.02	Applicable Standards			
12.03	Material and Painting			
12.04	Height			

Notes :

1. Single asterisk (*) marked particulars are guaranteed.
2. Other particulars are bonafide and may vary slightly upon completion of detailed design.
3. Particulars against items marked * and + shall be furnished with the Bid.

Bidders Name : _____

Signature : _____

Name : _____

Designation : _____

Seal of Company Date : _____

SCHEDULE – C10

AC DISTRIBUTION BOARDS

S.No	Description	Buyers Requirement	Sellers Data
1	**Panel Construction**		
1.1	Enclosure Type	Free standing, indoor, Fully compartmentalized, Metal clad, Vermin Proof	
1.2	Enclosure degree of protection	IP 5X	
1.3	Enclosure Material	CRCA steel	
1.4	Load bearing members	Minimum 2.5 mm thick	
1.5	Doors and covers	Minimum 2.0 mm thick	
1.6	Gland Plate (detachable type)	3.0mm MS detachable type or Aluminum 5.0mm for single core cables	
1.7	Separate compartment for	Bus bar, circuit breaker, incoming cable, outgoing cable PT, LV instruments.	
1.8	Breaker compartment door	Separate with lockable handle	
1.9	Fixing arrangement i. Doors ii. Covers iii. Gasket	 Concealed hinged Bolted with SS bolts Neoprene	
1.10	Panel Base Frame	Steel base frame as per manufacturer's standard.	
1.11	Handle	Removable bolted covers for cable chamber and busbar chamber shall be provided with "C" type handles	
1.12	Space Heater	Required	
1.13	Panel extension possibility	Required	
2	**MCCB**		
2.1	Mounting	Flush Mounted	
2.2	Rated Operational Voltage(V)	415 volt	
2.3	Ultimate breaking Capacity		
2.3.1	630A MCCB	As per requirement	
2.3.2	100A MCCB	As per requirement	
2.4	Rated Service breaking capacity at rated voltage Ics	Ics =100% Icu	
2.5	Rotary handle	Required	
2.6	Interlocking arrangement	Between Incomer MCCBs	
2.7	Trip time	As per requirement	
2.8	Test Certificates	Should have test certificates for breaking capacities from independent test authorities	

		CPRI / ERDA or equivalent	
3	**MCB**		
3.1	Rated Operational Voltage(V)	415 VAC 50 Hz	
3.2	Protection relay/Release	Magnetic thermal release for over current and short circuit protection	
3.3	Breaking capacity	Shall not be less than 10 KA at 415 VAC	
3.4	Mounting	Din mounted	
3.5	MCB classification	As required	
3.6	ISI Marked	The complete range shall be ISI marked	

Bidders Name : _____

Signature : _____

Name : _____

Designation : _____

Seal of Company Date : _____

SCHEDULE – C11

STATION AUXILIARY TRANSFORMER

Sr.	Particulars	Specified / Required	Offered
1.0	General		
1.1	Make		
1.2	Type	Oil immersed, core type, step down located generally outdoor but may be located indoor also with poor ventilation. Bidder shall confirm full rating available in indoor location also	
2.0	Nominal Continuous Rating, KVA		
2.1	HV winding	400kVA	
2.2	LV winding	400kVA	
3.0	Rated voltage (kV)		
3.1	HV Winding	11 kv	
3.2	LV Winding	433 volt	
4.0	Rated current (Amps)		
4.1	HV Winding		
4.2	LV Winding		
5.0	Connections		
5.1	HV Winding	Delta	
5.2	LV Winding	Star with neutral	
5.3	Vector Group reference	Dyn11	
6.0	Impedance at principal tap rated current and frequency, ohm @75 deg C		
6.1	Impedance	5.0 % with IS tolerance	

6.2	Reactance		
6.3	Resistance		
6.4	Impedance at lowest tap at rated current and frequency		
6.5	Impedance at highest tap at rated current and frequency		
7.0	Resistance of the winding at 75^0 C in ohm		
7.1	a) HV		
7.2	b) LV		
8.0	Zero sequence impedance in ohm		
8.1	a) HV		
8.2	b) LV		
9.0	Guaranteed maximum losses at principal tap full load and 75°C without any positive tolerance, kW		
9.1	No load losses (max.)	0.7	
9.2	Load losses (max.)	5.1	
9.4	Total I^2R losses of windings @ 75 deg C, KW		
9.5	Total stray loses @ 75 deg C, KW		
9.6	Total losses (max.), KW	5.8	
9.7	No load loss at maximum permissible voltage and frequency (approx.),kW		
10.0	Temperature rise over reference ambient of 50 ^{0}C		
10.1	Top oil by thermometer ^{0} C	40 ^{0}C	
10.2	Winding by resistance ^{0} C	45 ^{0}C	

11.0	Efficiency		
11.1	Efficiency at 75^0C and unity power factor %		
11.1.1	at 110% load		
11.1.2	at 100% load		
11.1.3	at 80% load		
11.1.4	at 60% load		
11.1.5	at 40% load		
11.1.6	at 20% load		
11.2	Efficiency at 75^0C and 0.8 power factor lag %		
11.2.1	at 110% load		
11.2.2	at 100% load		
11.2.3	at 80% load		
11.2.4	at 60% load		
11.2.5	at 40% load		
11.2.6	at 20% load		
11.3	Maximum efficiency at 75^0C %		
11.4	Load and power factor at which it occurs		
12.0	Regulation , (%)		
12.1	Regulation at full load at 75^0 C		
12.1.1	at unity power factor		
12.1.2	at 0.8 power factor lagging		
12.2	Regulation at 110% load at 75^0 C		
12.2.1	at unity power factor		
12.2.2	at 0.8 power factor lagging		
13.0	Tappings		

13.1	Type	Off Circuit taps on HV winding	
13.2	Capacity	Full capacity	
13.3	Range-steps x % variation	+5% to -5% @ 2.5%	
13.4	Taps provided on HV winding (Yes / No)	Yes.	
13.5	Rated current of rotary switch	60 A	
14.0	Cooling system	-	
14.1	Type of cooling	ONAN	
14.2	No. of cooling unit Groups		
14.3	Capacity of cooling units		
14.4	Mounting of radiators		
14.5	Number of Radiators		
14.8	Total radiating surface , sqmm		
14.9	Thickness of radiator tubes, mm	Minimum 1.2 mm	
15.0	Details of Tank		
15.1	Material	Robust mild steel plate without pitting and low carbon content	
15.2	Thickness of sides mm		
15.3	Thickness of bottom mm		
15.4	Thickness of cover mm		
15.5	Confirmation of Tank designed and tested for Vacuum, Pressure (Ref: CBIP Manual) , (Yes/ No)		
15.5.1	Vacuum mm of Hg. / (kN/m^2)	As per CBIP	
15.5.2	Pressure mm of Hg.	Twice the normal head of oil / normal pressure + $35kN/m^2$ whichever is lower, As per CBIP	
15.6	Is the tank lid sloped?	Yes	
15.7	Inspection cover provided (Yes / No)	as per clause 4.2.1.5	
15.8	Location of inspection cover (Yes / No)		
15.9	Min. dimensions of inspection cover (		

	provide list of all inspection cover with dimension), mm x mm		
16.0	Core		
16.1	Type:	Core	
16.2	Core material grade	Premium grade minimum M4	
16.3	Core lamination thickness in mm	0.27 Max	
16.4	Insulation of lamination	With insulation coating on both sides	
16.5	Design flux density at rated condition at principal tap, Tesla		
16.6	Maximum flux density at 10 % overexcitation /overfluxing, Tesla	1.9 Tesla	
16.7	Equivalent cross section area mm²		
16.8	Guaranteed No Load current at 100% rated voltage , Amps		
16.8.1	HV		
16.8.2	LV		
16.9	Guaranteed No Load current At 110% rated voltage, Amps		
16.9.1	HV		
16.9.2	LV		
17.0	Type of Winding		
17.1	HV		
17.2	LV		
17.3	Conductor material	Electrolytic Copper	
17.4	Current density (HV/LV)	Maximum allowed 3.0 A per sqmm. At any tap	
17.5	Gauge/area of cross section of conductor		
17.5.1	a) HV		
17.5.1	b) LV		

17.6	Insulating material		
17.6.1	HV Turn		
17.6.2	LV Turn		
17.6.3	LV Core	-	
17.6.4	HV - LV	-	
17.7	Insulating material thickness, mm		
17.7.1	HV Turn		
17.7.2	LV Turn	-	
17.7.3	LV to Core		
17.7.4	HV to LV		
		-	
18.0	Minimum design clearance, mm		
18.1	HV to earth in Air		
18.2	HV to earth in oil		
18.3	LV to earth in Air		
18.4	LV to earth in oil		
18.5	Between HV & LV in Air		
18.6	Between HV & LV in oil		
18.7	Top winding and yoke		
18.8	Bottom winding and yoke		
19.0	Insulating oil		
19.1	Quantity of oil Ltrs		
19.1.1	In the Transformer tank		
19.1.2	In each radiator		
19.1.4	Total quantity		
19.2	10% excess oil furnished?	Yes	
19.3	Type of Oil	As per BSES Spec Annex -C	
20.0	Bushing / Support Insulator		
20.1	Make	-	
20.2	Type		

20.2.1	HV side	As per Cl. 3.2.7.1 of the spec	
20.2.2	LV side	As per Cl. 3.2.7.2 of the spec	
20.3	Reference Standard		
20.4	Voltage class, kV		
20.4.1	HV side Bushing/ Support Insulator	12 kV	
20.4.2	LV side line and neutral bushing/ Support Insulator	1.1 kV	
20.5	Creepage factor for all bushing / Support Insulator mm/KV	31 mm / kV	
20.6	Rated thermal short time current		
20.6.1	HV bushing	25 times rated current for 2 secs.	
20.6.2	LV line and neutral bushing	25 times rated current for 2 secs.	
20.7	Weight, Kg		
20.7.1	HV bushing		
20.7.2	LV line and neutral bushing		
20.8	Free space required for bushing removal, mm		
20.8.1	HV bushing		
20.8.2	LV line and neutral bushing		
21.0	Terminal connections		
21.1	HV	Cable size as per annexure A 22.0	
21.2	LV	Cable size as per annexure A 23.0	
21.3	LV Neutral	Cable size as per annexure A 23.0	
22.0	H.V. Cable box	Required	
22.1	Suitable for cable type , size	As per annexure A cl. 22.0	
22.2	Termination height, mm	750 mm, minimum	
22.3	Gland Plate dimension, mm x mm		
22.4	Gland Plate material	Aluminium	
22.5	Gland Plate Thickness, mm	5 mm minimum	
22.5	Phase to phase clearance inside box, mm	180 mm	
22.6	Phase to earth inside box, mm	120 mm	

22.7	HV Cable Box Protection Class	IP 55	
23.0	L.V Cable termination arrangement	With cable box	
23.1	Suitable for cable type , size	Cable size as per annexure A cl. 23.0	
23.2	Termination height, mm	1000 mm, minimum	
23.3	Gland Plate dimension, mm x mm		
23.4	Gland Plate material	Aluminium	
23.5	Gland Plate Thickness, mm	5 mm minimum	
23.5	Phase to clearance inside box, mm	25 mm minimum	
23.6	Phase to earth inside box, mm	25 mm minimum	
23.7	LV Cable Box Protection Class	IP 55	
24.0	L.V neutral Cable termination arrangement	Separate cable box not required	
25.0	Current Transformer on LV phases		
25.1	Type		
25.2	Make		
25.3	Reference Standard		
25.4	CT Ratio	As per annexure C cl 21.0	
25.5	Burden, VA	As per Cl. 3.2.9.5 of the spec.	
25.6	Class of Accuracy	As per Cl. 3.2.9.4 of the spec.	
25.7	CT terminal box size	As per Cl. 3.2.9.8.1 of the spec.	
26.0	Pressure release device		
26.1	Minimum pressure the device is set to rupture		
26.1.1	For Main Tank		
27.0	Fittings Accessories Each Transformer furnished as per Clause No 5. (Bidder shall attach separate sheet giving details, make and bill of materials)		

28.0	Painting: as per clause for the transformer, cable boxes, radiator, Marshalling box (Yes/No)		
29.0	Over all transformer dimensions		
29.1	Length, mm	1700	
29.2	Breadth, mm	1500	
29.3	Height, mm	1700	
30.0	Transformer Tank Dimensions		
30.1	Length, mm		
30.2	Breadth, mm		
30.3	Height, mm		
31.0	Weight data		
31.1	Core, kG		
31.2	Frame parts, kG		
31.3	Core and frame, kG		
31.4	Total Winding, kG		
31.5	Core , Frame, Winding, kG		
31.6	Tank, kG		
31.7	Tank lid, kG		
31.8	Empty conservator tank, kG		
31.9	Each radiator empty, kG		
31.10	Total weight of all radiators empty, kG		
31.11	Weight of oil in Tank, kG		
31.12	Weight of oil in Conservator, kG		
41.13	Weight of oil in each Radiators, kG		
31.14	Total weight of oil in Radiators, kG		
31.16	Total Transport weight of the transformer, kG		
32.0	Volume Data		

32.1	Volume of oil in main tank, litres		
32.2	Volume of oil between highest and lowest levels of main conservator, litres		
32.4	Volume of oil in each radiator, litres		
32.5	Total volume of oil in radiators, litres		
32.7	Transformer total oil volume, litres		
33.0	Shipping Data		
33.1	Weight of heaviest package, kG		
33.2	Dimensions of the largest package (L x B x H) mm		
34.3	Tests		
34.1	All in process tests confirmed as per Cl. (Yes/ No)		
34.2	All Type Tests confirmed as per Cl. (Yes / No)		
34.3	All Routine Tests confirmed as per Cl. (Yes/ No)		
34.4	All Special Tests confirmed as per Cl. (Yes/ No)		

Bidders Name : _____
Signature : _____
Name : _____
Designation : _____
Date : _____

Seal of Company

SCHEDULE – C12

GROUNDING & LIGHTNING PROTECTION SYSTEM

S.No.	Description	Unit	Data by vendor
1	**Earth mat**		
a	Material		
b	Size of conductor		
c	Fault withstand current & duration		
2	**Equipment Earthing**		
a	Material		
b	Size of conductor		
3	**Earth Electrode**		
a	Material		
b	Size		
c	Length		
4	**Lightning Protection System**		
a	Material and size of horizontal air termination		
b	Material and size of vertical air termination		
c	Material and size of down conductor		
d	Size of test link		
e	Material of enclosure for test link		
f	Material and size of earth electrode		

Bidders Name : _____

Signature : _____

Name : _____

Designation : _____

Seal of Company Date : _____

SCHEDULE – C13

CABLE ACCESSORIES

1	Cable Accessories	
1.01	Makes	
1.02	Termination kits	
1.03	Straight through joint kits	
1.04	Cable glands	
1.05	Cable lugs	
1.06	Termination blocks	
1.07	Types	
1.08	Termination kits	
1.09	Straight through joints	
1.1	Cable glands	
1.11	Cable lugs	
1.12	Terminal blocks	

Bidders Name : _____

Signature : _____

Name : _____

Designation : _____

Seal of Company Date : _____

SCHEDULE – C14

CABLE TRAYS, ACCESSORIES AND TRAY SUPPORT, CONDUITS, PIPES AND DUCTS

1	**General**	
a	Name of the Contractor	
b	Name of sub contractors, if any	
c	Applicable standards	
2	**Cable Trays and Fittings**	
a	Cable Trays and Fittings	
i.	Make	
ii.	Type	
iii.	Material	
	1. Thickness (mm)	
	2. Thickness of galvanization (microns)	
	3. Zinc coating per sq meter (gms)	
3	**Conduits , Fitting and Accessories**	
a	Pipes with fitting	
i.	Make	
ii.	Type	
iii.	Material	
	1. Thickness (mm)	
	2. Thickness of galvanization (microns)	
b	Flexible conduits with fittings and accessories	
i.	Make	
ii.	Type	
iii.	Material	
	1. Thickness (mm)	
	2. Thickness of galvanization (microns)	

Bidders Name : _____

Signature : _____

Name : _____

Designation : _____

Seal of Company Date : _____

SCHEDULE – C15

GAS INSULATED SWITCHGEAR

Proposed Technical data 66 k V Gas insulated switchgear

Sr. No.	Description		Proposed Data
1.0	Manufacturer		
2.0	Country of origin		
3.0	Type designation		
4.0	Indoor or outdoor		
5.0	Applied standard, publication number and year		
6.0	Segregated-phase type or common enclosure type		
7.0	Rate voltage	kV rms	
8.0	Number of phase		
9.0	Rated lightning impulse withstand voltage	kV peak	
9.1	phase to earth		
9.2	phase to phase		
9.3	across open contact		
10.0	Rated 1 min power-frequency withstand voltage	kV rms	
11.0	Auxiliary circuit 50HZ, 1 min withstand voltage		
12.0	Rated frequency	Hz	
13.0	Rated short time withstand current	kA	
14.0	Rated peak withstand current	kA	
15.0	Degree of protection for auxiliary and control circuit		
16.0	Rated supply voltage of closing and opening device	Vdc	
17.0	Permissible ambient temperature	**0C**	

18.0	Maximum temperature rise at.....A		
19.0	Material of enclosure	Al/alloy/steel	
20.0	Average Thickness	mm	
21.0	Guarantee SF6 gas losses per compartment per year	%	
22.0	Design Maintenance period		
23.0	Rated SF6 gas pressure at 20 **0C**		
24.0	Minimum safe gas pressure at 20**0C** required for safe operation		
25.0	Setting of pressure relief device (20 **0C**)		
26.0	Emergency operation at rated voltage and	yes/no	
27.0	No. of Gas Compartment		
27.1	Bus Bar		
27.2	**Feeder**		
28.0	Heat losses per feeder at rated power	KW	
29.0	Bay width	mm	
30.0	Volume of gas contained in each compartment	M3	
31.0	Burn through time of enclosure for internal fault of 31.5KA	Sec	
32.0	Weight per bay (ready for operation)	Sec	
33.0	Heaviest part	Kg	
34.0	Net total weight	Kg	
35.0	Packing detailed drawing number (to be attached)	Kg	
CIRCUIT BREAKER			
1.0	Manufacturer		

2.0	Country of manufacture		
3.0	Type designation, number of pole		
4.0	Indoor or outdoor		
5.0	Applied standard, publication number and year		
6.0	Catalog number (to be attached)		
7.0	Outline drawing number (to be attached)		
8.0	Rated voltage	kV	
9.0	Rated lightning impulse withstand voltage	kV peak	
10.0	Rated 1 min power-frequency withstand voltage	kV rms	
11.0	Rated frequency	Hz	
12.0	Rated normal current	A	
13.0	Rated short-circuit breaking current	kA	
14.0	Rated short-circuit making current	kA	
15.0	Rated duration of short-circuit	s	
16.0	Rated operating sequence		
17.0	Short-time withstand current, 3 sec	kA	
18.0	Total break time	ms	
19.0	Rated capacitive breaking current	A	
20.0	Rated small inductive breaking current	A	
21.0	Rated out-of-phase breaking current	A	
22.0	Switching over current factor	pu	
23.0	Rated characteristics of short line faults		

23.1	TRV of supply circuit		
23.2	TRV peak value uc		
23.3	time delay td		
24.0	Opening time		
24.1	Maximum		
25.0	Maximum closing time		
26.0	Maximum make time		
27.0	Minimum dead time		
28.0	Gas operating pressure		
28.1	Rated pressure at..... **0C**	Kg/cm	
28.2	Alarm pressure at..... **0C**	Kg/cm	
28.3	Lock out pressure at..... **0C**	Kg/cm	
29.0	Contacts		
29.1	Type of contact		
29.2	Material		
29.3	Surface treatment		
29.4	Maximum temperature rise at.....A	**0C**	
30.0	Guaranteed contact life in terms of number of operation		
31.0	Operating mechanism		
31.1	Type		
31.2	Method of operation (hydraulic, pneumatic or motor operated spring charging)		
31.3	Mechanical life in terms of number of operation		

31.4	Method of interlocking		
31.5	Number of auxiliary contacts, NO/NC		
31.6	Rated voltage of tripping, closing and		
31.7	interlocking coil	vdc	
31.8	Method of interlocking		
32.0	Motor		
32.1	Rated voltage		
32.2	Voltage range in % of rated		
32.3	Number of phase		
32.4	Frequency		
32.5	Power		
33.0	Number of operations within one maintenance period		
33.1	At rated normal current	Recommended	
33.2		Maximum	
33.3	At Rated Breaking capacity	Recommended	
33.4		Maximum	
33.5	Accumulated current per one set	KA	
33.6	Static weight complete set	Kg	
33.7	Dynamic weight complete set	Kg	
33.8	Detailed complete set of drawing to be attached		

CONDUCTOR

S.No.	**Description**		**Proposed Data**	
			Line & Bus coupler	**Transformer Bays**

			Bays	
1.0	Manufacturer			
2.0	Country of manufacture		k V	
3.0	Type designation, number of pole		K V peak	
4.0	Indoor or outdoor		kV rms	
5.0	Applied standard, publication number and year		Hz	
6.0	Catalog number (to be attached)		A	
7.0	Outline drawing number (to be attached)			
8.0	Material			
9.0	Rated voltage			
10.0	Rated lightning impulse withstand voltage			
11.0	Rated 1 min power-frequency withstand voltage			
12.0	Voltage			
13.0	Rated normal current			
14.0	Rated short time withstand current, 1sec.	kA		
15.0	Rated Peak withstand current	Amp		
16.0	Rated capacitive current	Amp		
17.0	Gas operating pressure			
18.0	Rated pressure at..... **0C**	kg/cm		
19.0	First stage alarm pressure at..... **0C**			
20.0	Second stage alarm pressure at..... **0C**			
21.0	Material (Copper or aluminum)			
22.0	Packing detailed drawing number(to be attached)			

DISCONNECTOR				
S.NO.	Description		Proposed Data	
			Bus Disconnector	Other Disconnector
1.0	Manufacturer			
2.0	Country of manufacturer			
3.0	Type designation, number of poles, indoor or outdoor			
4.0	Applied standard, publication number and year			
5.0	Catalog number (to be attached)			
6.0	Outline drawing number (to be attached)			
7.0	Rated voltage	kV		
8.0	Rated lightning impulse withstand voltage			
8.1	To earth and betweenpole	kV peak		
8.2	Across isolating distance	kV peak		
9.0	Rated power frequency withstand voltage, 1 min			
9.1	To earth and between pole	kV rms		
9.2	Across isolating distance	kV rms		
10.0	Rated frequency			
11.0	Rated normal current			
12.0	Rated short time withstand current , 3 sec.	kA		
13.0	Rated duration of short circuit	s		
14.0	Rated peak withstand current	kA peak		

15.0	Rated capacitive breaking current and recovery voltage	A, kV	
16.0	Rated inductive breaking current and recovery voltage	A, kV	
17.0	Closed loop current switching	A, V	
18.0	Gas operating pressure	kA	
18.1	Rated pressure at..... **0C**	kg/cm	
18.2	First stage alarm pressure at..... **0C**	kg/cm	
18.3	Second stage alarm pressure at..... **0C**	kg/cm	
19.0	Contact		
19.1	Type		
19.2	Material		
19.3	Surface treatment		
19.4	Temperature rise at..... **0C**		
20.0	Operating mechanism		
20.1	Type		
20.2	Method of operation		
20.3	Method of interlocking		
20.4	Operating time, close/open	s	
20.5	Number of auxiliary contact, NO/NC		
20.6	Power requirement	W	
20.7	Rated supply voltage	Vac/phase	
	Rated supply frequency	Hz	
	Recommended maintenance period	Year	
	Packing detailed drawing number(to be attached)		

Earthing Switch

S.No.	**Description**		**Proposed Data**

			High Speed	Slow Acting
1.0	Operating speed			
2.0	Manufacturer			
3.0	Country of manufacturer			
4.0	Type designation, number of poles, indoor or outdoor			
5.0	Applied standard, publication number and year			
6.0	Catalog number(to be attached)			
7.0	Outline drawing number(to be attached)			
8.0	Rated voltage	k V		
9.0	Rated lightning impulse withstand voltage	k Vpeak		
10.0	Rated power frequency withstand voltage, 1 min.	k Vrms		
11.0	Rated frequency	Hz		
12.0	Rated short- circuit making current	A		
13.0	Guranteed number of short-circuit making operation			
14.0	Rated short-time withstand current			
15.0	Rated duration of short circuit			
16.0	Rated peak withstand current			
17.0	Gas operating pressure			
17.1	Rated pressure at..... **0C**			
17.2	First stage alarm pressure at..... **0C**			
17.3	Second stage alarm pressure at..... **0C**			
18.0	Contact			
18.1	Type			
18.2	Material			

18.3	Surface treatment			
18.4	Temperature rise at.....A			
19.0	Operating mechanism			
19.1	Type			
19.2	Method of operation			
19.3	Method of interlocking			
19.4	Operating time, close/open			
19.5	Number of auxiliary contact, NO/NC			
19.6	Power requirement	W		
20.0		Vac /Phase		
20.1	Rated supply voltage	Vdc		
20.2	Rated supply frequency	Hz		
21.0	Interrupting capability			
21.1	Inductive current			
21.2	Interrupting current			
21.3	Recovery voltage			
22.0	Capacitive current			
22.1	Interrupting current			
22.2	Recovery voltage			
22.3	Recommended maintenance period			
23.0	Packing detailed drawing number (to be attached)			
24.0	Interrupting capability			

VOLTAGE TRANSFORMER

S.NO.	Description		Proposed Data	
1.0	Manufacturer			
2.0	Country			
3.0	Type designation, number of phases			

4.0	Applied standard, publication number and year				
5.0	Catalog number (to be attached)				
6.0	Outline drawing number (to be attached)				
7.0	Rated voltage	k V			
8.0	Rated Lightning impulse withstand voltage	k V peak			
9.0	Rated power frequency withstand voltage, 1 min	kV rms			
10.0	Rated frequency	Hz			
11.0	Rated burden	VA			
12.0	Rated second voltage	V			
13.0	Metering core				
13.1	Rated output and accuracy class				
13.2	Rated transformation ratio				
13.3	Rated voltage factor				
14.0	Protective core				
14.1	Rated output and accuracy class				
14.2	Rated transformation ratio				
14.3	Rated voltage factor				
15.0	Class of insulation and material	**0C**			
16.0	Maximum temperature rise at.....A	kg			
17.0	Net weight				
18.0	Packing detailed drawing (to be attached)				
Current Transformer					
S.No.	**Description**		**Proposed Data**		
			Line	**Bus Coupler**	**Transformer**

			Bay	Bay	Bay
1.0	Manufacturer				
2.0	Country of manufacturer				
3.0	Type designation, number of phases				
4.0	Applied standard, publication number and year				
5.0	Catalog number (to be attached)				
6.0	Outline drawing number (to be attached)				
7.0	Mounted inside GIS enclosure or on power cables				
8.0	Ring type or bushing type				
9.0	Rated voltage	kV			
10.0	Rated lightning impulse withstand voltage	kV peak			
11.0	Rated power frequency withstand voltage, 1 min	kV rms			
12.0	Rated frequency	Hz			
13.0	Rated primary current	A			
14.0	Rated short time thermal current(3s)	kA			
15.0	Rated dynamic current	kA peak			
16.0	Rated continuous thermal current in percentage of rated primary current	%			
17.0	Class of insulation & material				
18.0	Maximum temperature rise at.....A				
19.0	Metering core				
19.1	Rated transformation ratio				
19.2	Rated output and				

	accuracy class				
19.3	Instrument security factor				
20.0	Protection core				
20.1	Rated transformation ratio				
20.2	Rated output and accuracy class				
20.3	Accuracy limit factor				
21.0	Net weight				
22.0	Packing detailed drawing number (to be attached)				

Sealing End

S.No.	Description		Proposed Data
1.0	Manufacturer		
2.0	Standards		
3.0	Material		
4.0	Rated power frequency voltage	Yes / no	
4.1	(1 min/20 □C)	k V	
5.0	Breakdown dielectric stress	k V /mm	
6.0	Maximum working dielectric stress	k V /mm	
7.0	Impulse withstand voltage	k V	
8.0	Creepage distance (minimum)	mm	
9.0	Expansion devices	Yes / no	
10.0	Splicing method of conductor		
11.0	Compound for internal insulation		
12.0	Nominal weight	Kg /pc	

Bay Board

S.No	Description		Proposed Data
1.0	Manufacturer		
2.0	Type		
3.0	Applied standard, publication number and year		
4.0	Confirm to be supplied according to specification	Yes /no	
5.0	Material		
5.1	Steel thickness (minimum)		
5.2	- door	Mm	
5.3	- side/top/near panels	Mm	
6.0	Surface finish	k V /mm	
6.1	Total Paint thickness(Minimum)		
7.0	Dimension		
7.1	Length		
7.2	Width		
7.3	Height		
8.0	Total net weight		
9.0	Packing detailed drawing number(to be attached)		
Type test certification			
Type test made on identical design of equipment to those offered			Proposed Data
a	Circuit breakers		
	Terminal faults: (Test duties 1,2,3,4 and 5		
	to IEC 56) (with a first phase to clear factor of 1.5)		
	Making current		
	Short-time current		

	Dielectric		
	Temperature rise		
	Mechanical endurance		
	Short-line faults (60%, 75%, 90%)		
	Out-of-Phase tests		
	Capacitance switching		
	Low inductive switching		
	Special tests : Parallel switching		
	Partial discharges		
b)	Disconnectors		
	Short-time current	One second	
		Three second	
	Peak current		
	Dielectric withstand		
	Temperature endurance		
	Capacitance switching		
	Peak current		
c)	Busbars and Connections		
	Short-time current	One second	
		Three second	
d)	**Earthing switches**		
	Short-time current	One second	
		Three second	
	Peak current		
	Making current capability Dielectric withstand		
	Dielectric withstand		
	Mechanical endurance		
	Type Tests Made on Identical Designs of		

	Equipment to Those Offered		
	Interrupting capability for line coupling currents :		
	- capacitive currents		
	- inductive currents		
	Peak current		
	Making current capability Dielectric withstand		

Bidders Name : _____

Signature : _____

Name : _____

Designation : _____

Seal of Company Date : _____

SCHEDULE – C16

POWER TRANSFORMER

Sr.No.	Particular	Specified / Required	Offered
1.0	General		
1.1	Make		
1.2	Type	As per Annexure C of specification	
2.0	Nominal continuous rating, KVA		
2.1	HV winding	As per Annexure C of specification	
2.2	LV winding	As per Annexure C of specification	
2.3	Type of Cooling	ONAN/ONAF	
2.4	Rating available at different cooling	ONAN - 80% ONAF-100%	
3.0	Rated voltage (KV)		
3.1	HV winding	As per Annexure C of specification	
3.2	LV winding	As per Annexure C of specification	
4.0	Rated current (Amps)		
4.1	HV winding		
4.2	LV winding		
5.0	Connections		
5.1	HV winding	As per Annexure C of specification	
5.2	LV winding	As per Annexure C of specification	
5.3	Vector group reference	As per Annexure C of specification	
6.0	Impedance at principal tap rated current and frequency at 75 °C with 100 % Rating (%)		
6.1	Impedance (%)	As per Annexure C of specification	
6.2	Reactance (%)		
6.3	Resistance (%)		
6.4	Impedance at lowest tap rated current and frequency at 75 °C with 100 % Rating (%)		
6.5	Impedance at highest tap rated current and frequency at 75 °C with 100 % Rating (%)		
7.0	Resistance of the winding at 75^0Cat principal tap (ohm)		
7.1	a) HV		

7.2	b)LV		
8.0	Zero sequence impedance (ohm)		
8.1	a) HV		
8.2	b) LV		
9.0	Guaranteed maximum losses at principal tap at full load and 75^0 C without any positive tolerance kW		
9.1	No load losses (max.)	As per Annexure C of specification	
9.2	Load losses (max.)	As per Annexure C of specification	
9.3	Cooler fan losses (max.)		
9.4	Total I^2R losses of winding @ 75 deg C		
9.5	Total stray losses @ 75 deg C		
9.6	Total Load losses (max.)		
9.7	No load loss at maximum permissible voltage and frequency (approx.) kW		
10.0	Temperature rise over reference design ambient of 40 ^{0}C		
10.1	Top oil by thermometer ^{0}C	40^0 C	
10.2	Winding by thermometer ^{0}C	45^0 C	
10.3	Winding gradient at rated current ^{0}C		
10.3.1	HV		
10.3.2	LV		
11.0	Efficiency		
11.1	Efficiency at 75^0 C and unity power factor %		
11.1.1	At 110% load		
11.1.2	At 100% load		
11.1.3	At 80% load		
11.1.4	At 60% load		
11.1.5	At 40% load		
11.1.6	At 20% load		
11.2	Efficiency at 75^0 C and 0.8 power factor lag %		
11.2.1	At 110% load		
11.2.2	At 100% load		
11.2.3	At 80% load		
11.2.4	At 60% load		
11.2.5	At 40% load		
11.2.6	At 20% load		
11.3	Maximum efficiency %		
11.4	Load and power factor at which Max efficiency occurs		
12.0	Regulation (%)		
12.1	Regulation at full load at 75^0 C		
12.1.1	At unity power factor		
12.1.2	At 0.8 power factor lagging		
12.2	Regulation at 110% load at 75^0 C		
12.2.1	At unity power factor		
12.2.2	At 0.8 power factor lagging		

13.0	Tapping		
13.1	Type		
13.2	Capacity		
13.3	Range-steps x % variation	As per Annexure C of specification	
13.4	Taps provided on HV winding (Yes/No)		
14.0	OLTC gear		
14.1	Make		
14.2	Type		
14.3	Reference std		
14.4	No of compartment		
14.5	Mounting arrangement	Side mounted	
14.6	Rated current Amp		
14.7	Rated step capacity, kVA		
14.8	Short circuit withstand for 2 secs, kA		
14.9	Time required for one step change sec.		
14.10	Rated voltage for motor, V AC		
14.11	Rating of motor		
14.12	Rated voltage for auxiliaries V		
14.13	Consumption of auxiliaries		
14.14	OLTC features as per specification, Yes/No		
14.15	Does the overload rating of OLTC match with that of the transformer under all conditions Yes/No		
15.0	Transformer Monitoring relay – REGDA		
15.1	Make		
15.2	Reference standard		
15.3	Overall dimensions, mm		
16.0	Cooling system		
16.1	Type of cooling	As per Annexure C of specification	
16.2	No. of cooling unit groups		
16.3	Capacity of cooling units		
16.4	Mounting of radiators		
16.5	Number of radiators and Size		
16.6	Type & size of radiator header main valve		
16.7	Type & size of individual radiator valve		
16.8	Total radiating surface, sq mm		
16.9	Thickness of radiator tubes, mm	Minimum 1.2 mm	
16.10	Schematic flow diagram of the cooling system furnished (Yes/No)		
16.11	Type and make of Fan motor		
16.12	No. of fan motor per bank (Working + Standby)		
16.13	Rated Power Input (kW)		
16.14	Rated Voltage, Speed of Motor		
16.15	Efficiency of motor at Full load(%)		
16.16	Locked Rotor current(Amps)		
17.0	Details of tank		

17.1	Material	Robust mild steel plate without pitting and low carbon content	
17.2	Thickness of sides mm		
17.3	Thickness of bottom mm		
17.4	Thickness of cover mm		
17.5	Confirmation of tank designed and tested for vacuum pressure (Ref: CBIP manual) (Yes/No)		
17.5.1	Vacuum mm of Hg. / (kN/m^2)	As per CBIP	
17.5.2	Pressure mm of Hg	Twice the normal head of oil / normal pressure + 35 kN/m^2 whichever is lower , As per CBIP	
17.6	Is the tank lid slopped?	Yes	
17.7	Inspection cover provided (Yes/No)	As per clause No 3.2.1.5	
17.8	Location of inspection cover (Yes/No)	As per clause No 3.2.1.5	
17.9	Min. dimensions of inspection cover (provide list of all inspection cover with dimension), mm x mm		
18.0	Core		
18.1	Type:	Core	
18.2	Core material grade	Premium grade minimum M4 or better	
18.3	Thickness of lamination mm	Max. 0.27 mm with insulating coating on both sides	
18.4	Insulation between core lamination		
18.5	Design flux density of the core at rated condition at principal tap, Tesla		
18.6	Maximum flux density allowed in the core at extreme over excitation / over fluxing , Tesla		
18.7	Equivalent cross section area of core, mm^2		
18.8	Guaranteed No load current at 90% / 100% / 110% rated voltage & frequency (Amp)		
18.8.1	HV		
18.8.2	LV		
19.0	Type of winding		
19.1	HV		
19.2	LV		
19.3	Conductor material	Electrolytic copper as per relevant standard	
19.4	Maximum current density allowed, Amp per mm^2	3.0 A/ mm^2	
19.5	Gauge/area of cross section of conductor, mm^2		
19.5.1	HV		
19.5.2	LV		

19.6	Maximum current density achieved in winding (LV/HV/HVT) – Amps/ mm^2		
19.7	Insulating material		
19.7.1	HV turn		
19.7.2	LV turn		
19.7.3	LV- core		
19.7.4	HV-LV		
19.8	Insulating material thickness, mm		
19.8.1	HV turn		
19.8.2	LV turn	-	
19.8.3	LV to core		
19.8.4	HV to LV		
20.0	Minimum design clearance , mm		
20.1	HV to earth in air		
20.2	HV to earth in oil		
20.3	LV to earth in air		
20.4	LV to earth in oil	-	
20.5	Between HV & LV in Air		
20.6	Between HV & LV in oil		
20.7	Top winding and yoke	-	
20.8	Bottom winding and yoke		
21.0	Insulating oil		
21.1	Quantity of oil Ltrs	-	
21.1.1	In the transformer tank		
21.1.2	In each radiator		
21.1.3	In OLTC chamber		
21.1.4	Total quantity		
21.2	10% excess oil furnished?	Yes	
21.3	Type of oil	New insulating oil as per IS: 335, and Cl. 4.2.7 of the specification	
21.4	Oil preservation system provided (Yes/No)	As per Annexure C of specification	
22.0	Bushing		
22.1	Make		
22.2	Type		
22.3	Reference standard		
22.4	Voltage class, kV		
22.4.1	HV side bushing		
22.4.2	LV side line and neutral bushing		
22.5	Creepage factor for all bushing mm / kV	As per Annexure C of specification	
22.6	Rated current , Amp		
22.6.1	HV bushing		
22.6.2	LV line and neutral bushing		
22.7	Rated thermal short current		
22.7.1	HV bushing	As per Annexure C of specification	
22.7.2	LV line and neutral bushing	As per Annexure C of	

		specification	
22.8	Weight Kg		
22.8.1	HV bushing		
22.8.2	LV line and neutral bushing		
22.9	Free space required for bushing removal, mm		
22.9.1	HV bushing		
22.9.2	LV line and neutral bushing		
23.0	Terminal connections		
23.1	HV	As per Annexure C of specification	
23.2	LV	As per Annexure C of specification	
23.3	LV Neutral	As per Annexure C of specification	
24.0	H.V. Cable box/Terminals		
24.1	Suitable for cable/conductor type size	As per Annexure C of specification	
24.2	Termination height , mm	1000 mm , minimum	
24.3	Gland plate dimension mm x mm		
24.4	Gland plate material	Aluminum	
24.5	Gland plate thickness , mm	5 mm minimum	
24.5	Phase to clearance inside box / terminals , mm		
24.6	Phase to earth inside box / terminals , mm		
25.0	L.V line side cable box		
25.1	Suitable for cable type , size	As per Annexure C of specification	
25.2	Termination height , mm	1000 mm , minimum	
25.3	Gland plate dimension mm x mm		
25.4	Gland plate material	Aluminum	
25.5	Gland plate thickness , mm	5 mm minimum	
25.6	Phase to clearance inside box / terminals , mm		
25.7	Phase to earth inside box , mm		
26.0	LV Neutral cable box		
26.1	Suitable for cable type , size	As per Annexure C of specification	
26.2	Termination height , mm		
26.3	Gland plate dimension mm x mm		
26.4	Gland plate material	Aluminum	
26.5	Gland plate thickness , mm	5 mm minimum	
26.6	Phase to clearance inside box , mm		
26.7	Phase to earth inside box , mm		
27.0	Marshalling box cubical provided as per clause no. of spec. (Yes / no)		
27.1	Mounting of marshalling box	Project specific to be filled up (Separate / tank mounted)	

28.0	Neutral Current Transformer (NCT)			
28.1	Type			
28.2	Make			
28.3	Reference standard			
28.4	CT Ratios			
28.5	Burden ,VA			
28.6	Class of Accuracy	PS	5P20	
28.7	KPV , volts , minimum			
28.8	Resistance, ohm @ 75 deg C, maximum			
28.9	Magnetizing current @ Vk/4 , mA , maximum			
28.10	Short time withstand current	26.3 kA for 3 sec.		
29.0	Winding current transformer (WCT)			
29.1	Type			
29.2	Make			
29.3	Reference standard			
29.4	CT ratio			
29.5	Burden ,VA	Manufacturer Std.		
29.6	Class of accuracy	Manufacturer Std.		
30.0	Pressure release device			
30.1	Minimum pressure the device is set to rupture			
30.1.1	For main tank			
30.1.2	For OLTC			
31.0	Alarm and trip contact ratings of protective devices			
31.1	Rated/making/ breaking currents , Amp @ voltage for			
31.1.1	PRV for main tank			
31.1.2	PRV for OLTC			
31.1.3	Buchholz relay			
31.1.4	Oil surge relay for OLTC			
31.1.5	Sudden pressure relay			
31.1.6	OTI			
31.1.7	WTI			
31.1.8	Magnetic oil gauge			
32.0	Fittings accessories each transformer furnished as per clause No. (Bidder shall attach separate sheet giving details, make and bill of materials)			
33.0	Painting: as per clause for the transformer , cable boxes, radiator, marshalling box, RTCC etc (Yes/No)			
34.0	Over all transformer dimensions			
34.1	Length , mm	6.5 meters maximum allowed		
34.2	Breadth , mm	5.0 meters maximum allowed		
34.3	Height , mm	5.0 meters maximum		

		allowed	
35.0	Transformer tank dimensions		
35.1	Length , mm		
35.2	Breadth , mm		
35.3	Height , mm		
36.0	Marshalling box dimensions		
36.1	Length , mm		
36.2	Breadth , mm		
36.3	Height , mm		
37.0	Weight data		
37.1	Core, kG		
37.2	Frame parts, kG		
37.3	Core and frame, kG		
37.4	Total winding, kG		
37.5	Core and frame winding, kG		
37.6	Tank, kG		
37.7	Tank lid, kG		
37.8	Empty conservator tank , kG		
37.9	Each radiator empty , kG		
37.10	Total weight of all radiator empty , kG		
37.11	Weight of oil in tank , kG		
37.12	Weight of oil in each conservator , kG		
37.13	Weight of oil in each radiators , kG		
37.14	Total weight of oil in radiator , kG		
37.15	OLTC gear including oil , kG		
37.16	Total transport weight of the transformer , kG		
37.17	Total transport weight of the transformer with OLTC and all accessories		
38.0	Volume data		
38.1	Volume of oil in main tank , liters		
38.2	Volume of oil between highest and lowest levels of main conservator ,liters		
38.3	Volume of oil between highest and lowest levels of OLTC conservator, liters		
38.4	Volume of oil in each radiator , liters		
38.5	Total volume of oil in radiators , liters		
38.6	Volume of oil in OLTC , liters		
38.7	Transformer total oil volume , liters		
39.0	Shipping data		
39.1	Weight of heaviest package, kG		
39.2	Dimensions of the largest package (L x B x H) mm		
40.0	Tests		
40.1	All in process tests confirmed as per Cl. (Yes /No)		
40.2	All types tests confirmed as per Cl. (Yes /No)		
40.3	All in routine tests confirmed as per Cl.		

	(Yes /No)		
40.4	All in special tests confirmed as per Cl. (Yes /No)		

Bidders Name : _____

Signature : _____

Name : _____

Designation : _____

Seal of Company Date : _____

SCHEDULE – D
LIST OF INSTALLATIONS

S.No.	Purchaser	Project	PF Ref.	Brief Description	Value	Target Commissioning	Commissioned	Performance	Person to whom reference may be made	Remarks
1	2	3	4	5	6	7	8	9	10	11

Bidders Name : _____

Signature : _____

Name : _____

Seal of Company

Designation : _____

Date : _____

SCHEDULE – E1

TECHNICAL DEVIATIONS FROM THE SPECIFICATION

(This shall form part of Technical Bid)

All the technical deviation from the tender specification shall be listed out by the Bidder, para by para in this schedule. Deviation taken in covering letter, standard terms and/or body of the Bid but not listed herein will make the Bid liable for rejection as 'Irresponsive'

S.No.	Section/Sub-Section	Part	Para	Deviation	Justification
1	2	3	4	5	6

Certified that above are the only technical deviations from the tender Specification

Name of Firm : _____

Signature of Bidder : _____

Designation : _____

Date : _____

Seal of Company

SCHEDULE – E2

COMMERCIAL DEVIATIONS FROM THE SPECIFICATION

(This shall form part of Technical Bid)

All the commercial deviation from the tender specification shall be listed out by the Bidder, para by para in this schedule. Deviation taken in covering letter, standard terms and/or body of the Bid but not listed herein will make the Bid liable for rejection as 'Irresponsive'.

S.No.	Section/Sub-Section	Part	Para	Deviation	Justification
1	2	3	4	5	6

Certified that above are the only technical deviations from the tender Specification

Name of Firm : _____

Signature of Bidder : _____

Designation : _____

Date : _____

Seal of Company

SCHEDULE – F

DELIVERY TERMS AND CONDITIONS

1	Quoted for all the items & in the manner as called for in Specification	*Yes/No
1.1	If not, furnish details of deviations	
2	Price FOR site delivery basis	
2.1	Freight:	
	1 Applicable rate	* Not included/included
2.2	Transit Insurance including forty five(45) days storage	
	1 Applicable rate	* Not included/included
2.3	Excise duty	
	1 Applicable rate	* Not included/included
2.4	Sales tax	
	1 Applicable rate	* Not included/included
2.5	Are quoted price firm	*Yes/No
3	Delivery from LOI	
3.1	Supply	
3.2	Erection	
3.3	Testing & commissioning	
3.4	Whether penalty clause acceptable	*Yes/No
4	Validity	
5	Terms of payment	
5.1	As per tender specification	*Yes/No
5.2	If not, give details	
6	Guarantee period	
6.1	Is it as per the tender specification	*Yes/No
6.2	If not, state alternative guarantee period acceptable	
7	Earnest money furnished	*Yes/No
8	Agreeable to furnish security deposit as per the tender specification	*Yes/No
8.1		*Yes/No
9	Agreeable to furnish performance Bank as per the tender specification	*Yes/No
10	Correspondence, drawings, test certificates, instruction manuals, BAR/PERT charts progress reports etc. shall be furnished in number of copies as per distribution schedule attached to the tender specification	*Yes
11	Agreeable to approval of above documents in our (4) weeks from date of receipt as per tender specification	Yes
12	Agreeable to commercial as well as technical terms & conditions of the tender specification, unless listed deviations are accepted	Yes
13	Commencing & completion of submission of drawings from LOI	

	Bidders Name	: _____
	Signature	: _____
	Name	: _____
	Designation	: _____
Seal of Company	Date	: _____

SCHEDULE – G

SCHEDULE OF TEST

(This shall form part of Technical Bid)

Tests as per the relevant Indian Standard except as modified and/or as additionally called for in the tender specification shall be performed. Detailed list of the type test certificates enclosed for the various equipments offered shall be listed in the schedule.

S.No.	Type of test	Equipment	Description
1	2	3	4

1.0 TYPE TESTS

2.0 TESTS
– DURING MANUFACTURE

3.0 ROUTINE TESTS
– ON COMPLETION OF MANUFACTURE

Name of Firm : _____

Signature of Bidder : _____

Designation : _____

Date : _____

Seal of Company

SCHEDULE – H

LIST OF INSTRUMENTS, TESTING EQUIPMENTS, TOOLS AND TACKLES FOR ERECTION AND MAINTANANCE

(This shall form part of Technical Bid)

S.No.	Description	Capacity	Quantity	Delivery
(1)	(2)	(3)	(4)	(5)

1.0 INSTRUMENTS, TESTING EQUIPMENT, TOLLS & TACKLES FOR ERECTION
(To be taken back by the Bidder after completion of job)

2.0 INSTRUMENTS, TESTING EQUIPMENT, TOOLS & TACKLES FOR MAINTENANCE
(To be taken back by the Bidder after completion of job)

3.0 SPECIAL INSTRUMENTS, TSTING EQUIPMENT, TOOLS & TACKLES FOR ERECTION
(To be taken back by the Bidder after completion of job)

4.0 SPECIAL INSTRUMENTS, TSTING EQUIPMENT, TOOLS & TACKLES FOR MAINTENANCE
(To be taken back by the Bidder after completion of job)

Name of Firm : _____

Signature of Bidder : _____

Designation : _____

Date : _____

Seal of Company

SCHEDULE – I

SCHEDULE OF RECOMMENDED SPARES

Bidder shall offer the prices for spares for destination, rate of taxes & duties to be considered shall be indicated.

S.No.	Description	Quantity	Unit Price	Total Price
1	2	3	4	5

Bidders Name : _____

Signature : _____

Name : _____

Designation : _____

Seal of Company Date : _____

SCHEDULE – J

DECLARATION

(This shall form part of Technical Bid)

I, _____ certify that all the typed data & information pertaining to the subject tender specification are correct & are true representation of the equipment covered by our formal Bid No_____dated_____.

I hereby, certify that I am duly authorized representative of the Bidder whose name appears above my signature.

Bidders Name : _____

Authorized Representative Signature : _____

Authorized Representative Name (Typed) : _____

Authorized Representative Designation : _____

Seal of Company

Date : _____

Bidder's Intent : The bidder hereby agrees to fully comply with the requirements & intents of the subject tender specification for the price(s) indicated

Authorized Representative Signature : _____

33KV INDOOR SWITCHGEAR PANEL

INCOMER-3

220KV LODHI ROAD

33KV KUSHAK NALLAH

INCOMER-4

36KV, 2000A AT 50°C, 26.3 KA FOR 3SEC.

36KV, 2000A AT 50°C, 26.3 KA FOR 3SEC.

BUS PT-1 BUS RISER

BUS PT-2

TRANSFORMER-1

TRANSFORMER-2

11KV INDOOR SWITCHGEAR PANEL

11KV, 2000A AT 50°C, 26.3 KA FOR 3SEC. COPPER BUS BAR

OUT GOING FEEDER 1

OUT GOING FEEDER 2

OUT GOING FEEDER 3

OUT GOING FEEDER 4

OUT GOING FEEDER 5

OUT GOING FEEDER 6

OUT GOING FEEDER 7

OUT GOING FEEDER 8

OUT GOING FEEDER 9

OUT GOING FEEDER 10

STATION TRANSFORMER FEEDER

OUT GOING FEEDER 11

OUT GOING FEEDER 12

OUT GOING FEEDER 13

OUT GOING FEEDER 14

OUT GOING FEEDER 15

OUT GOING FEEDER 16

OUT GOING FEEDER 17

OUT GOING FEEDER 18

OUT GOING FEEDER 19

OUT GOING FEEDER 20

LEGEND:

- POWER CIRCUIT
- CONTROL CIRCUIT
- BUSBAR
- LIGHTNING ARRESTOR
- 3 POSITION MOTORISED ISOLATOR WITH EARTH
- POTENTIAL TRANSFORMER
- MOTORISED EARTH SWITCH
- CURRENT TRANSFORMER
- DRAWOUT TYPE VACCUM CIRCUIT BREAKER
- POWER TRANSFORMER
- FUSE
- DRAWOUT TYPE VACCUM CIRCUIT BREAKER
- UNDER VOLTAGE PROTECTION
- OVER VOLTAGE PROTECTION
- MFM MULTI FUNCTION METER
- PQA POWER QUALITY ANALYSER
- KWH ENERGY METER
- ASS AMMETER SELECTOR SWITCH
- A AMMETER
- VSS VOLTAGE SELECTOR SWITCH
- V VOLTMETER
- TTB TEST TERMINAL BLOCK
- 87L LINE DIFFERENTIAL PROTECTION
- 21D DISTANCE PROTECTION
- 25 SYNC-CHECK RELAY
- 64R RESTRICTED EARTH FAULT
- OLTC TAP POSITION & RAISE/LOW ON OLTC
- DIFFERENT SWITCHES ON POWER TRANSFORMER - HV WTI, LV WTI, OTI, Main Tank OSR, SPR, PRV, Buchholz, MOG, OLTC OSR trip, OLTC Out of Step/Stuck Up/Motor trip
- NDR NEUTRAL DISPLACEMENT PROTECTION
- 87/67N DIRECTIONAL OVERCURRENT & EARTH FAULT
- 51/51N OVERCURRENT & EARTH FAULT
- BrCoPr BROKEN CONDUCTOR PROTECTION
- 50BF LOCAL BREAKER BACKUP PROTECTION
- 86 LOCK OUT RELAY
- 94 ANTIPUMPING RELAY\N
- 52 BREAKER CONTACT MULTIPLIER
- 95 TRIP CIRCUIT SUPERVISION RELAY
- 87T TRF. DIFFERENTIAL PROTECTION
- 51SEF STAND BY EARTH FAULT PROTECTION
- 50BF BREAKER FAILURE PROTECTION
- 50/50N INSTANTANEOUS OVERCURRENT & EARTH FAULT

NOTE:-

1. BURDENS ARE TENDER PURPOSE ONLY AND MAY CHANGE SUBJECT TO CALCULATIONS DURING DETAILED ENGINEERING.
2. REFER CLAUSE 19 OF SPECIFICATION FOR DETAILED FUNCTIONAL REQUIREMENT OF RELAYS.
3. ONE BPT TO BE PROVIDED FOR EACH BUS SECTION.
4. SELECTED PT BASED ON BPT LOGIC FOR PROTECTION AND METERING.
5. THIS DRAWING IS TENTATIVE AND FOR TENDER PURPOSE ONLY.
6. REFER TENDER SPECIFICATION FOR FURTHER DETAILS.

REV. No.	DESCRIPTION	DATE	PRPD. BY	CHKD. BY	APPR. BY
C	THIRD DRAWING				
B	SECOUND DRAWING				
A	FIRST DRAWING	03.03.25	BS	US	AS

BSES Rajdhani Power Limited

BSES BHAWAN
Nehru Place, New Delhi - 110017

DRAWN	SK
CHECKED	BG/US
APPD.	AS
DATE	03.03.25
SCALE	NTS

TITLE:- SLD OF 2X31.5MVA 33/11KV KASTURBA NAGAR S/S.

DWG No.:- BRPL-KASTURBA-DEE-B-0001

SHEET 1 OF 1

REV. 00

VER. 00

Bidder's Name & Signature

Page 256 of 355

NIT NO.CMC/BRPD/2-26/PKR/0921/271

KASTURBA NAGAR - GROUND FLOOR

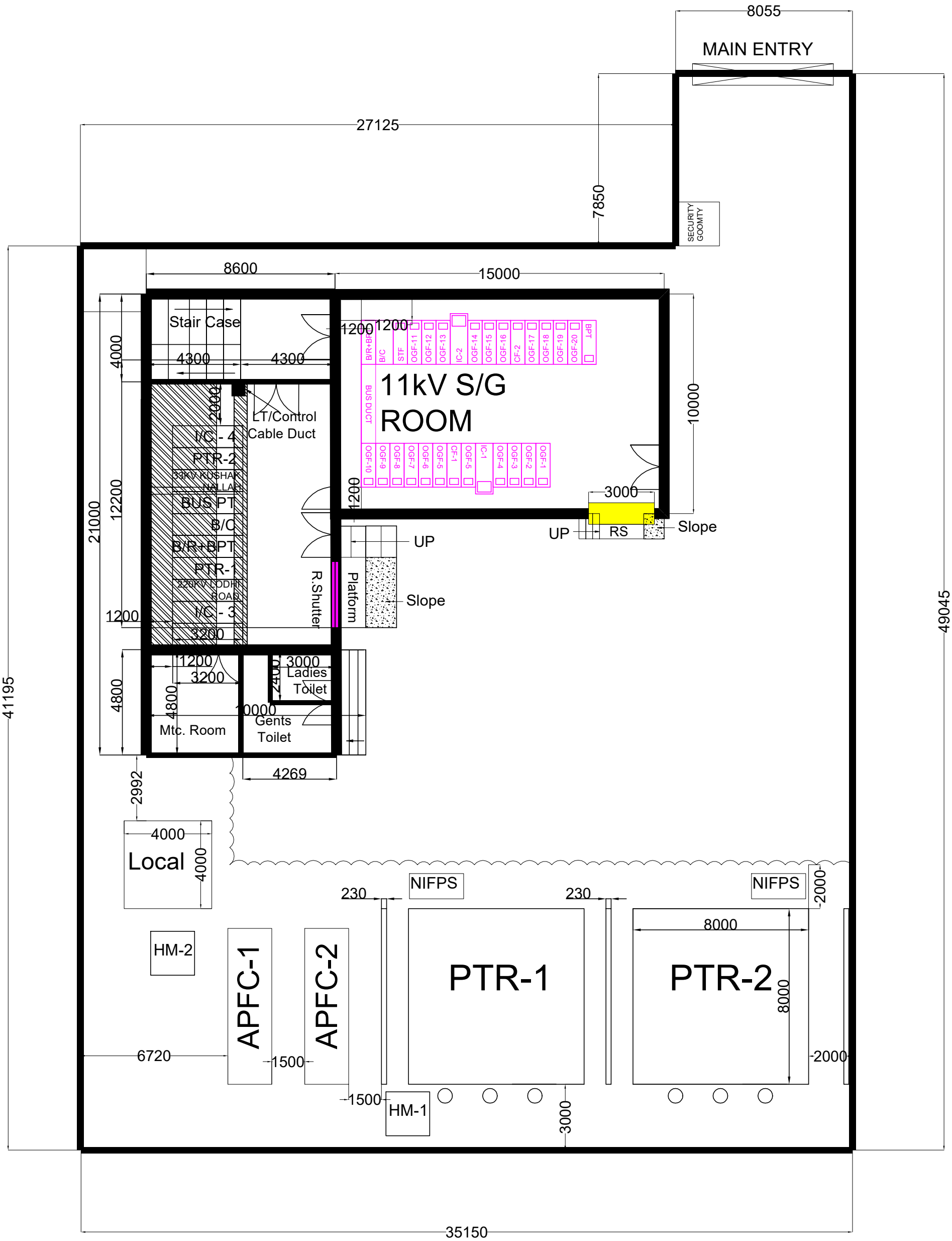

KASTURBA NAGAR - FIRST FLOOR

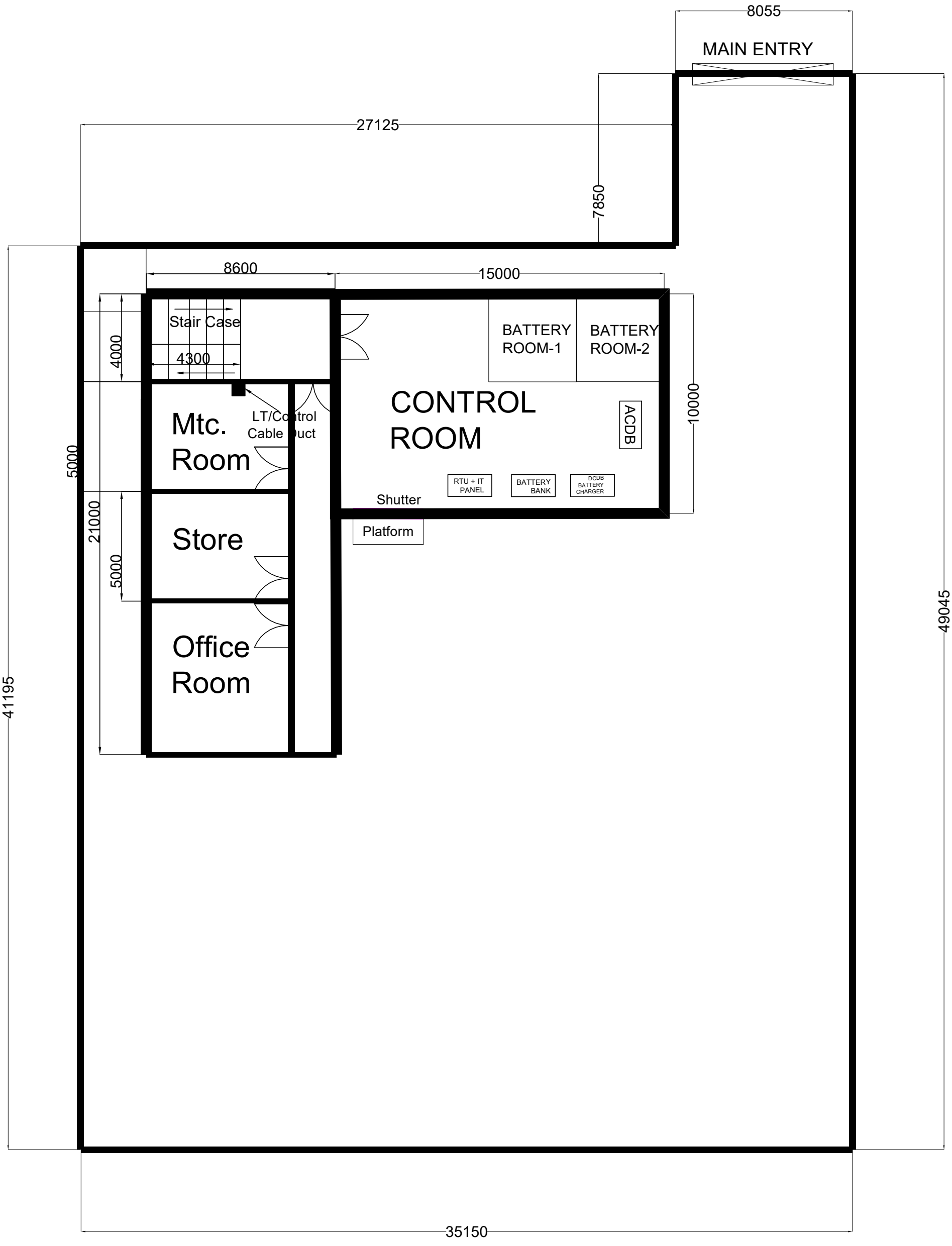

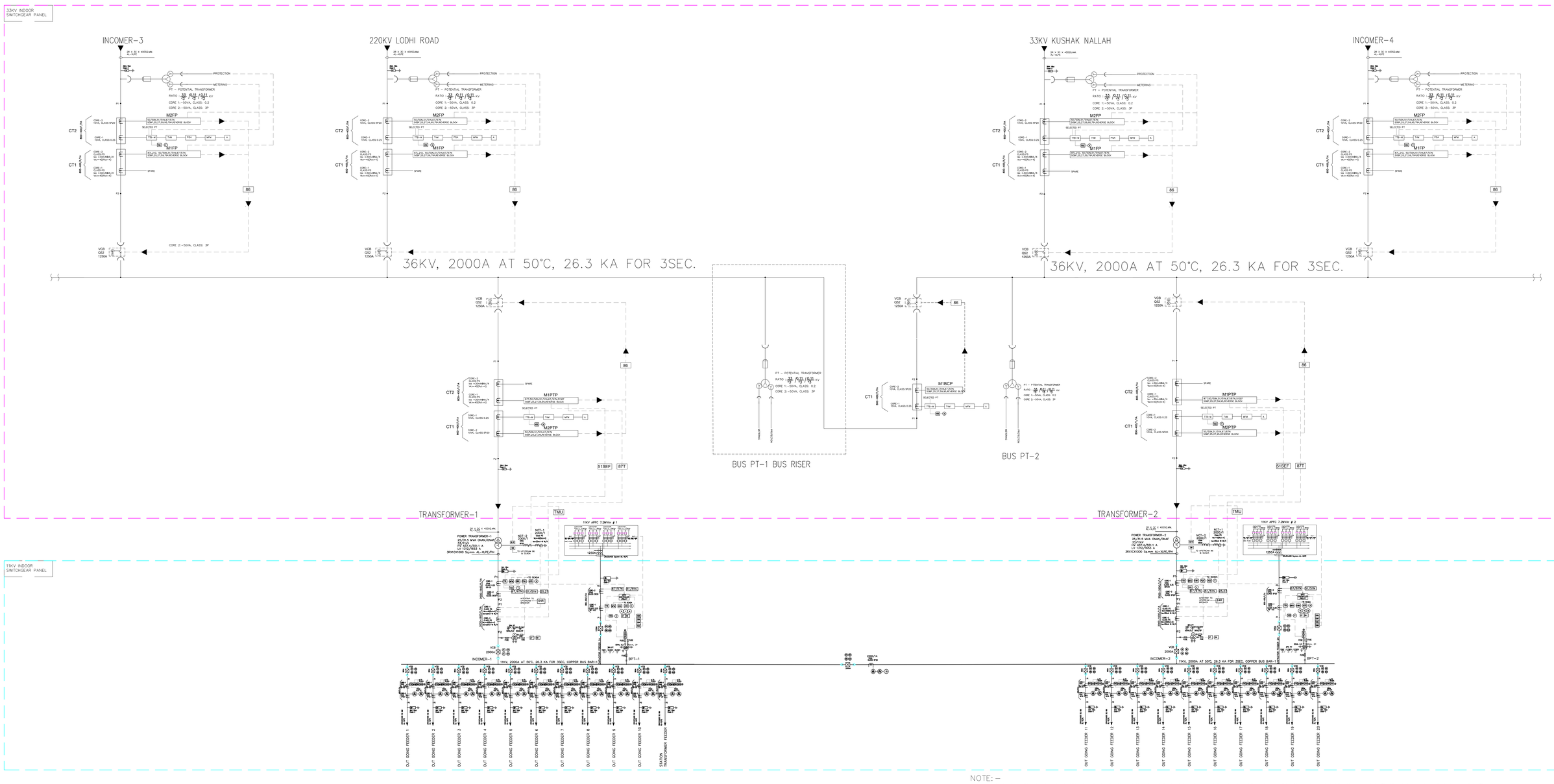

LEGEND:

- POWER CIRCUIT
- CONTROL CIRCUIT
- BUSBAR
- LIGHTNING ARRESTOR
- 3 POSITION MOTORISED ISOLATOR WITH EARTH
- POTENTIAL TRANSFORMER
- MOTORISED EARTH SWITCH
- CURRENT TRANSFORMER
- DRAWOUT TYPE VACCUM CIRCUIT BREAKER
- POWER TRANSFORMER
- FUSE
- DRAWOUT TYPE VACCUM CIRCUIT BREAKER
- UNDER VOLTAGE PROTECTION (27)
- OVER VOLTAGE PROTECTION (59)
- MFM MULTI FUNCTION METER
- PQA POWER QUALITY ANALYSER
- KWH ENERGY METER
- ASS AMMETER SELECTOR SWITCH
- A AMMETER
- VSS VOLTAGE SELECTOR SWITCH
- V VOLTMETER
- TTB TEST TERMINAL BLOCK
- 87L LINE DIFFERENTIAL PROTECTION
- 21D DISTANCE PROTECTION
- 25 SYNC–CHECK RELAY
- 64R RESTRICTED EARTH FAULT
- ALTC TAP POSITION & RAISE/LOW ON OLTC
- SW DIFFERENT SWITCHES ON POWER TRANSFORMER – HV WTI, LV WTI, OTI, Main Tank OSR, SPR, PRV, Buchholz, MOG, OLTC OSR trip, OLTC Out of Step/Stuck Up/Motor trip
- 59N NEUTRAL DISPLACEMENT PROTECTION
- 67/67N DIRECTIONAL OVERCURRENT & EARTH FAULT
- 51/51N OVERCURRENT & EARTH FAULT
- BrCoPr BROKEN CONDUCTOR PROTECTION
- 96AB LOCAL BREAKER BACKUP PROTECTION
- 86 LOCK OUT RELAY
- 94 ANTIPUMPING RELAY\N
- 62 BREAKER CONTACT MULTIPLIER
- 95 TRIP CIRCUIT SUPERVISION RELAY
- 87T TRF. DIFFERENTIAL PROTECTION
- 51SEF STAND BY EARTH FAULT PROTECTION
- 50BF BREAKER FAILURE PROTECTION
- 50/50N INSTANTANEOUS OVERCURRENT & EARTH FAULT

NOTE:–

1. BURDENS ARE TENDER PURPOSE ONLY AND MAY CHANGE SUBJECT TO CALCULATIONS DURING DETAILED ENGINEERING.
2. REFER CLAUSE 19 OF SPECIFICATION FOR DETAILED FUNCTIONAL REQUIREMENT OF RELAYS.
3. ONE BPT TO BE PROVIDED FOR EACH BUS SECTION.
4. SELECTED PT BASED ON BPT LOGIC FOR PROTECTION AND METERING.
5. THIS DRAWING IS TENTATIVE AND FOR TENDER PURPOSE ONLY.
6. REFER TENDER SPECIFICATION FOR FURTHER DETAILS.

REV. No.	DESCRIPTION	DATE	PRPD. BY	CHKD. BY	APPR. BY
C	THIRD DRAWING				
B	SECOUND DRAWING				
A	FIRST DRAWING	03.03.25	BS	US	AS	AS

BSES Rajdhani Power Limited
BSES BHAWAN
Nehru Place, New Delhi - 110017

DRAWN	SK	TITLE:-	SLD OF 2X31.5MVA 33/11KV KASTURBA NAGAR S/S.
CHECKED	BG/US		
APPD.	AS		
DATE	03.03.25	DWG No.:- BRPL-KASTURBA-DEE-B-0001	SHEET 1 OF 1
SCALE	NTS		REV. 00 VER. 00

KASTURBA NAGAR - GROUND FLOOR



KASTURBA NAGAR - FIRST FLOOR

