BSES Rajdhani Power Ltd.

BSES RAJDHANI POWER LTD (BRPL)

Notice Inviting Tender (NIT)

For

Shifting of 66 kV O/H Feeder from 220 KV Okhla to Malviya Nagar circuit no. 1 & 2 from DMRC casting Yard near Pushpa Bhawan to Khanpur T Point for construction of DMRC L-11 corridor from G Block Saket to Lajpat Nagar - Scheme No: ES26SH1003

NIT No: CMC/BR/26-27/FK/CR/AG/1374

Dated: 21.07.2026

Due Date for Submission of Tender: 10.08.2026, 15:30 HRS

Date and Time of opening: 10.08.2026, 16:00 HRS

BSES RAJDHANI POWER LIMITED,

BSES Bhawan, Nehru Place, New Delhi – 110019.

Corporate Identification Number: U74899DL2001PLC111527

Website : www.bsesdelhi.com

(This document is meant for the exclusive purpose of bidding against this NIT Number /Specification and shall not be transferred, reproduced, or otherwise used for purposes other than that for which it is specifically issued).

BSES Rajdhani Power Ltd.

CONTENTS

S.No.	ITEM	DISCRIPTION
1	**CHECK LIST**	CHECK LIST FOR BID SUBMISSION
2	**SECTIONS**	
2.1	SECTION-I	REQUEST FOR QUOTATION (RFQ)
2.2	SECTION-II	INSTRUCTION TO BIDDERS (ITB)
2.3	SECTION-III	SPECIAL CONDITIONS OF CONTRACT (SCC)
2.4	SECTION-IV	GENERAL CONDITIONS OF CONTRACT (GCC)
2.5	SECTION-V	SCOPE OF WORK
2.5	SECTION-VI	PRICE BID
2.6	SECTION-VII	TECHNICAL SPECIFICATIONS
2.7	SECTION-VIII	CALL BEFORE YOU DIG (CBuD)
3	**ANNEXURES**	
3.1	ANNEXURE-I	BID FORM
3.2	ANNEXURE-II	BIDDER'S DETAILS
3.3	ANNEXURE-III	ACCEPTANCE OF REVERSE AUCTION
3.4	ANNEXURE-IV	ENVIRONMENTAL, OCCUPATIONAL HEALTH & SAFETY CONDITIONS OF CONTRACT & CBuD CLAUSE
4	**FORMATS**	
4.1	EMD	EARNEST MONEY DEPOSIT (EMD) BANK GUARANTEE
4.2	CPBG	CONTRACT CUM PERFORMANCE BANK GUARANTEE (CPBG)
4.3	NDA	NON-DISCLOSURE AGREEMENT (NDA)
4.4	NDD	NO DEVIATION DECLARATION (NDD)
4.5	COMMUNICATION	BIDDER'S COMMUNICATION DETAILS

BSES

BSES Rajdhani Power Ltd.

INDEX

SECTION- I REQUEST FOR QUOTATION (RFQ) 7
1. GENERAL 8
2. POINTS TO BE NOTED 8
3. EMD 9
4. QUALIFYING REQUIREMENTS (QR) 10
1.1 (A.1) TECHNICAL QR: 10
5. PRE-BID MEETING: 12
6. BID SUBMISSION 13
6. TIME SCHEDULE 14
7. AWARD DECISION 15
8. MARKET INTEGRITY 15
9. CONFIDENTIALITY 15
10. CONTACT INFORMATION 16
SECTION-II : INSTRUCTIONS TO BIDDERS (ITB) 17
1. GENERAL 18
2. SCOPE OF WORK 18
3. DISCLAIMER 18
4. COST OF BIDDING 19
5. TENDER DOCUMENTS 19
6. AMENDMENT OF TENDER DOCUMENTS 19
7. PREPARATION OF BIDS & LANGUAGE 19
8. DOCUMENTS COMPRISING THE BID 20
9. BID FORM 20
10. BID PRICES 20
11. BID CURRENCIES 20
12. PERIOD OF VALIDITY OF BIDS 20
13. ALTERNATIVE BIDS 20
14. FORMAT AND SIGNING OF BID 20
15. SEALING AND MARKING OF BIDS 21
16. DEADLINE FOR SUBMISSION OF BIDS 21
17. ONE BID PER BIDDER 21
18. LATE BIDS 21
19. MODIFICATIONS AND WITHDRAWAL OF BIDS 21
20. EVALUATION OF BID 21
21. CLARIFICATION OF BIDS 21
22. PRELIMINARY EXAMINATION OF BIDS / RESPONSIVENESS 21
23. EVALUATION AND COMPARISON OF BIDS 22
24. CONTACTING THE COMPANY 22
25. COMPANY'S RIGHT TO ACCEPT ANY BID AND TO REJECT ANY OR ALL BIDS 22

BSES

26. AWARD OF CONTRACT 23
27. THE COMPANY'S RIGHT TO VARY QUANTITIES 23
28. LETTER OF INTENT/ NOTIFICATION OF AWARD 23
29. CORRUPT OR FRAUDULENT PRACTICES 23
30. PROCESS TO BE CONFIDENTIAL 23
SECTION – III : SPECIAL CONDITIONS OF CONTRACT (SCC) 24
1. DEFINITIONS 33
ENGINEER IN-CHARGE (EIC) / OFFICER-IN-CHARGE (OIC) 33
2. SCOPE OF WORK 33
3. EFFECTIVE DATE, TIME AND VALIDITY 33
4. ORDER VALUE 33
5. RATES & ESCALATION 33
6. CONTRACT CUM PERFORMANCE SECURITY BANK GUARANTEE (CPBG) 34
7. PAYMENT TERMS 35
8. PENALTY 35
9. DERC GUIDELINES & REGULATIONS 36
10. INSURANCE POLICIES 36
11. WARRANTY / DEFECT LIABILITY PERIOD 36
12. QUALITY: 37
13. WORK COMPLETION CERTIFICATION, HANDING OVER AND MATERIAL RECONCILIATION: 37
14. COMPLETION PERIOD: 38
15. GUIDELINES REGARDING INSPECTION & MAINTENANCE OF PITS /DUG AREA WHILE DOING WORK AT SITE IN BRPL AREA 38
SECTION – IV : GENERAL CONDITIONS OF CONTRACT (GCC) 39
1. DEFINITION & INTERPRETATION 40
2. PRIORITY OF CONTRACT DOCUMENTS 42
3. AMENDMENT 43
4. LANGUAGE AND MEASUREMENT 43
5. EXAMINATION OF SITE & LOCAL CONDITIONS 43
6. TAXES & DUTIES 43
7. PAYMENT 43
8. TAX INVOICE SUBMISSION PROCEDURE AND CERTIFICATION 44
9. TIME ESSENCE OF CONTRACT 44
10. NOT USED 44
11. INSPECTION & QUALITY CONTROL 45
12. REPORTS AND INFORMATION 45
13. STATUTORY OBLIGATIONS 45
14. REPRESENTATION, WARRANTIES AND GUARANTEES 46
15. EVENTS OF DEFAULTS 46
16. RISK & COST 47

BSES

17. LIMITATION OF LIABILITY 47
18. TERMINATION 47
19. GOVERNING LAW AND ARBITRATION 48
20. FORCE MAJEURE 48
21. NOTICE & COMMUNICATION 50
22. SAFETY CODE 50
23. CONTRACTOR'S OBLIGATIONS 51
24. INDEMNITY 51
25. SECRECY & CONFIDENTIALITY 52
26. NON-EXCLUSIVITY 52
27. SEVERABILITY 52
28. ASSIGNMENT & SUBLETTING 52
29. ASSIGNMENT BY THE COMPANY 53
30. NO JOINT VENTURE 53
31. WAIVER OF RIGHTS 53
32. THE COMPANY'S RIGHT TO VARY QUANTITIES 53
33. VENDOR CODE OF CONDUCT 53
34. DISCLOSURE OF RELATIONSHIP 53
35. MSME 53
36. COVID GUIDELINES 54
37. CLEANLINESS & PRECAUTIONS TO BE TAKEN WHILE DOING WORK AT SITE TO PREVENT DUST POLLUTION 54
38. ENVIRONMENTAL, HEALTH & SAFETY 55
39. ACCEPTANCE 57

SECTION – V :SCOPE OF WORK 59

SECTION – VI: PRICE BID 63

ANNEXURE –I :BID FORM 72

ANNEXURE – II: BIDDER'S DETAILS 73

ANNEXURE – III :ACCEPTANCE FORM FOR PARTICIPATION IN REVERSE AUCTION EVENT 77

ANNEXURE – IV:ENVIRONMENTAL, OCCUPATIONAL HEALTH & SAFETY CONDITIONS OF CONTRACT 78

SECTION – VII: TECHNICAL SPECIFICATION 97

SECTION – VIII: (CBuD) CALL BEFORE YOU DIG 276

BSES

BSES Rajdhani Power Ltd.

CHECK LIST

(FOR BID SUBMISSION)

S. No	Item Description	Y/N
1	BID INDEX	
2	COVERING LETTER	
3	TENDER FEE	
4	EARNEST MONEY DEPOSIT	
5	POWER OF ATTORNEY	
6	BID FORM DULY SIGNED	
7	NON-DISCLOSURE AGREEMENT (NDA)	
8	NO DEVIATION DECLARATION (NDD)	
9	UNPRICED TECHNO-COMMERCIAL BID (IN SEPARATE SEALED ENVELOPE-1)	
10	PRICE BID (IN SEPARATE SEALED ENVELOPE-2)	
11	COMPLETE BID DOCUMENTS, ENVELOPE 1 & 2 (IN SEPARATE SEALED ENVELOPE-3)	

BSES

BSES Rajdhani Power Ltd.

SECTION- I REQUEST FOR QUOTATION (RFQ)

BSES

BSES Rajdhani Power Ltd.

SECTION- I

REQUEST FOR QUOTATION (RFQ)

1. GENERAL

BSES Rajdhani Power Limited invites sealed tenders on a "Single Stage: Two Envelope" bidding basis (Envelope –I, Techno-Commercial Bid & Envelope-II, Price Bid) from eligible Bidders for Shifting of 66 KV O/H Feeder from 220 KV Okhla to Malviya Nagar circuit no. 1 & 2 from DMRC casting Yard near Pushpa Bhawan to Khanpur T Point for construction of DMRC L-11 corridor from G Block Saket to Lajpat Nagar - Scheme No: ES26SH1003.

The bidder must qualify the requirements as specified in heading "Qualifying Requirements" of this RFQ.

1.1. The sealed envelopes shall be duly super-scribed as:

"NIT No.: CMC/BR/26-27/FK/CR/AG/1374 Dated: 21.07.2026"

For

Shifting of 66 KV O/H Feeder from 220 KV Okhla to Malviya Nagar circuit no. 1 & 2 from DMRC casting Yard near Pushpa Bhawan to Khanpur T Point for construction of DMRC L-11 corridor from G Block Saket to Lajpat Nagar - Scheme No: ES26SH1003.

Schedule of the tendering process is given below. Detailed Specification, Scope of Work, Terms & Conditions, etc are mentioned in the Tender documents, which is available on our website.

Cost of Tender Documents (Non- Refundable)	Rs. 1180/- (including GST)
Estimated cost of work	Rs. 4.11 Crores
Earnest money Deposit	Rs. 8.22 Lakhs
Work to be completed by	06 Months from the date of LOI/PO/WO
Tender documents on sale	21/07/2026 to 10/08/2026 (Working days)
Date & time of Submission of Bid	10.08.2026 till 15:30 HRS
Date & time of opening of Techno-Commercial Bid	10.08.2026 at 16:00 HRS

1.2. The tender document can be obtained from address given below against submission of non-refundable demand draft of **Rs. 1180/-** drawn in favour of BSES Rajdhani Power Ltd, payable at Delhi:

Head of Department

Contracts & Material Dept.

BSES Rajdhani Power Limited

1st Floor, "C" Block, BSES Bhawan

Nehru Place, New Delhi -110019.

1.3. Only DD shall be accepted for tender fees.

1.4. The tender documents will be issued on all working days up to the date mentioned in clause 1.3. The tender documents & detail terms and conditions can also be downloaded from the website **www.bsesdelhi.com** or **https://srmprdportal.bsesdelhi.com/irj/portal**.

1.5. In case tender papers are downloaded from the above website, the bidder has to submit the demand draft covering the cost of bid documents and EMD as mentioned in tender document in a separate sealed envelope with suitable superscription - Tender Fee & EMD and Tender Notice Ref: **NIT No.: CMC/BR/26-27/FK/CR/AG/1374 Dated: 21.07.2026**, Due date of submission,

Tender opening date. This envelope should be delivered to the following address (scanned copy of Tender Fee & EMD to be uploaded on e –procurement portal):

HEAD OF THE DEPARTMENT, 1st FLOOR, 'C' BLOCK,

CONTRACTS & MATERIALS DEPARTMENT, BSES RAJDHANI POWER LTD,

BSES BHAWAN, NEHRU PLACE,

NEW DELHI-110019

1.6. Offers will be received upto 15:30 Hrs. on dt. 10.08.2026 as indicated earlier and will be opened at the address given below dt. 10.08.2026 at 16:00 Hrs. in the presence of authorized representatives of the bidders. The schedule of specifications with detail terms & conditions are enclosed. It is the sole responsibility of the bidder to ensure that the bid documents should upload on above website on or before the due date.

2. POINTS TO BE NOTED

2.1. Works envisaged under this contract are required to be executed in all respects up to the period of completion/ duration of work mentioned above.

2.2. Only those agencies, who fulfil the qualifying criteria as mentioned in clause 3 should submit the tender documents.

2.3. BSES RAJDHANI Power Ltd reserves the right to accept/reject any or all bids without assigning any reason thereof and alter/amend/modify/add/reduce the amount and quantity mentioned in the tender documents at the time of placing Order

2.4. The bid will be summarily rejected if:

(a) **Earnest Money Deposit (EMD)** and **Tender Fee** of requisite amount is not deposited as per tender conditions

(b) Bid received after due date and time.

3. EMD

3.1. The bidder shall furnish, as part of its bid, an EMD of the requisite amount. The EMD is required to protect the Company against the risk of Bidder's conduct which would warrant forfeiture. The EMD shall be denominated in any of the following forms:

(a) BG from nationalized / Scheduled Bank, as per the format annexed in the tender document, in favour of BSES Rajdhani Power Limited valid for 6(six) months from original due date of bid submission.

(b) Fixed Deposit (lien marked in favor of BSES RAJDHANI POWER LTD) valid for 6(six) months from original due date of bid submission.

3.2. Please note that bank details as given below have been provided only for the purpose of making BG for EMD.

Beneficiary Name	: BSES Rajdhani Power Limited
Bank Name	: State Bank of India
A/c No.	: 40214783615
IFSC Code	: SBIN0009601

The EMD of the bidders who are not technically qualified shall be returned after the price bid opening.

3.3. Earnest money given by all the bidders who are techno commercially qualified except the lower bidder shall be returned within 8 (Eight) weeks after award of the work.

3.4. The EMD of the successful bidder shall be returned on submission of CPBG as per tender terms.

3.5. The EMD may be forfeited in case of:

(a) The Bidder withdraws its bid during the period of bid validity specified by the Bidder in the Bid Form or

(b) The successful Bidder does not

(i) Accept the Purchase Order/Work Order, or

(ii) Furnish the required CPBG as per tender terms

(c)The bidder is found to have submitted false or forged, any of the documents/certificates/information.

4. QUALIFYING REQUIREMENTS (QR)

The prospective bidder must qualify all of the following requirements to be eligible to participate in the bidding. Bidders who meet the following requirements will be considered as the successful bidder and bidder who does not meet these requirements shall be disqualified

1.1 (A.1) TECHNICAL QR:

a. Bidder shall have executed at least one work of similar nature in last 5 years i.e. Erection of Monopoles of 33 kV or higher Voltage level with proper safety measures, safe handling, and transportation. The bidder must enclose order copies along with completion certificates in support of relevant experience.

OR

Bidder may sub-contract only execution work of monopole to an entity who meets the above experience credential. The bidder must enclose order copies along with completion certificates in support of relevant experience and provide the written confirmation of execution from sub contractor.

b. Bidder must provide experience certificate of having successfully laid 5 KM cumulative length of cable rating 33 kV, 3C XLPE Power Cables or higher voltages preferably for electric utilities/ SEBs / Discoms /Govt. organizations/Reputed private organizations/ OEM/other govt. organizations during the last 5 years in Delhi/NCR area or any other area in India. The bidder must enclose order copies along with performance certificates in support of relevant experience.

c. For Existing vendors of BRPL, following aspects will be taken into account while carrying out technical evaluation for qualification of bids:

1) Performance of bidders as measured by BRPL in earlier executed EHV works as well as in ongoing contracts.

2) Their ability and potential (in terms of availability of resources such as supervisory and execution manpower, T&P etc.) to simultaneously execute multiple works of similar kind (more than 2 EHV projects) in a safe and efficient manner - in compliance of statutory and legal provisions, relevant IS Standards and BRPL's Standard Operating Procedures (SoP).

3) Complaint of external bodies (Court, Police, Govt Departments, other statutory bodies, NGOs, Public etc.) for offences by the bidder in earlier executed EHV works.

d. Bidders should have basic testing equipments suitable for 33 & 66 kV line (e.g. High Voltage Tester or PC Set, 5 kV Insulation Resistance Tester, Sheath Fault measurement Kit, Discharge Rod with Condenser, Phase Sequence Tester etc.) available with his company & shall submit the list of tools & tackles, with Sl No, Make & Calibration certificates suitable for carrying out the specified job of current tender.

e. Bidders should have basic testing equipments like PC Set, Sheath Fault measurement Kit etc available with his company & shall submit the list of tools & tackles, with Sl No, Make & Calibration certificates suitable for carrying out the specified job tendered for.

Please note: Experience credential (except TQR–a) as a joint venture / subcontract/ consortium will not be considered. BRPL reserves the right to qualify or disqualify their bid based on the performance in spite of them meeting the above qualifying criteria.

(A.2) Commercial Qualifying Criteria:

a) The average annual turnover of the Bidder, in the preceding three (3) financial years (i.e., FY25-26, FY24-25 & FY23-24) should not be less than Rs 8 Crores (Rupees Eight Crore Only). The bidder shall submit the Annual Turnover Report of the last 3 FYs duly certified by a Chartered Accountant. The Turnover certificate must have the UDIN Number. In case audited balance sheet of FY2025-26 is not available than bidders can submit provisional balance sheet for FY25-26 along with UDIN based CA Certificates.
b) The bidder must provide proof of having solvency of an amount equal to Rs 0.50 Crore from any nationalized/ scheduled commercial bank. It should not be older than 1 year from the date of submission of the Techno-commercial bid.
c) Bidder should have Registration of GST & PAN.
d) Bidder should fulfil all statutory compliances like PF, ESI registration.
e) The bidder should possess valid Electrical Contractor License issued by competent statutory agency to undertake work in NCT Delhi. In case the bidder is not having this license, they have to give the undertaking that it will be obtained by them before the start of the work at site or suitable sub-contractor having the valid license shall be engaged for works at site with the approval of BRPL where copy of valid license shall be submitted to BRPL before the start of the work.
f) Entities that have been currently debarred/blacklisted by any Private/central/state government institution including electricity boards in India, any of the DISCOM in India, lacks qualifying pre-requisites to participate in this tender will not be considered. Accordingly, an undertaking by the Authorized Person along with other documents to be provided by the bidder on its letterhead in this regard, confirming in clear terms, that the contractor has not been debarred/blacklisted as on the date of submission of the bid. Bidders who is currently debarred/ blacklisted/ suspended by BRPL will not be considered in this tender.
g) The bidder should give an undertaking on their letterhead that all the documents/certificates/information submitted by them against the tender are genuine/true/correct and the copies of documents have been made from the original document/s. Further, in case any of the documents/certificates/information submitted by the bidder is found to be false or, BRPL at its sole discretion shall be free to take all actions as permitted under law, including forfeiture of EMD and disqualification from participation in the future tenders of BRPL & Its group companies for an indefinite period or period as may be decided by BRPL.
h) The bidder should submit an undertaking for "No Litigation" / no legal case is pending with BRPL or its Group Companies. Bidders having any litigation/ legal case pending with BRPL shall not be considered qualified for this tender.

OTHER REQUIREMENTS:

a) Company reserves the right to carry out technical capability/ infrastructure assessment of the Bidders by factory/office/site inspection or by any other means and company's decision shall be final in this regard.
b) No Joint ventures / consortiums are allowed.
c) The bidder shall submit all necessary documentary evidence to establish that the Bidder meets the above qualifying requirements including but not limited to the following:
d) Last three Financial Years (FY25-26, FY24-25 & FY23-24) audited financial statement.
e) Bidder to submit UDIN based CA Certificate showing NIL dues towards Statutory Liabilities, including GST, Taxation, PF, ESI, or any other dues Statutory in nature for the period upto 31.12.2025, herein collectively called as "Statutory dues" and there is no liability over the bidder relating to deposition of such statutory dues.
f) Detail of Banks and Fund & Non fund based Credit limit
g) Details of formation/registration of the firm (Proprietary/ Partnership) or Company along with all relevant details)
h) Memorandum & Articles of Association of the Company/ Partnership Deed of the Firm /other registration documents, as applicable
i) Organization Chart of the Bidders Company/organization

j) Organization chart for execution of the contract
k) Experience details with credentials
l) Number of Employees & necessary details
m) Details of office/s in Delhi, Details of Registered and Corporate offices and details of other offices/establishments in India.
n) Work order / Agreement copies along with performance certificates in support of relevant experience.
o) Turnover certificate issued by CA (along with UDIN no.) for the last three Financial Years.
p) Net worth certificate as elaborated in financial QR
q) List of pending litigation with government/other institution on account of executing any order.
r) Copy of ESI/PF Registration certificate
s) Copy of PAN/GST no.
t) Copy of GST Return of last Financial Year.
u) Copy of valid Electrical License
v) Non-Disclosure Agreement (NDA) as per format attached
w) Bidder's details as per format attached
x) Solvency Certificate
y) An undertaking to provide all Tools & Plants , PPEs as per tender scope
z) The bidder should enclose performance certificates in support of relevant experience.
aa) For Existing vendors of BRPL, the evaluation will also include the performance in the existing contracts via-a-vis performance in terms of HR issues, all statutory Compliance parameters and wages disbursement by Vendors. BRPL reserves the right to qualify or disqualify their bid based on the contract performance despite them meeting the above-mentioned qualification requirements. In case of bidder has a previous association with BRPL/BYPL for similar product and service, the performance feedback for that bidder by BRPL/BYPL shall only be considered irrespective of performance certificate issued by any third organization.
bb) BRPL may ask for such other documents as it deems fit for substantiating/ justifying the submissions made by the bidder.

5. PRE-BID MEETING:

A Pre-Bid meeting shall be organised physically or digitally (through web conferencing platform) at the time and date as specified in the tender documents in the presence of those bidders or their authorized representatives who may choose to be present.

The details of the Pre Bid Meeting are given below: -

Tender description	Pre Bid Date	time	Venue
Shifting of 66 KV O/H Feeder from 220 KV Okhla to Malviya Nagar circuit no 1 & 2 from DMRC casting Yard near Pushpa Bhawan to Khanpur T Point for construction of DMRC L-11 corridor from G Block Saket to Lajpat Nagar. - Scheme No: ES26SH1003.	29-07-2026	3:00 PM	BSES-NHP Office

All queries related to this tender must reach to C&M Department of BRPL at least three days before the date of the pre- bid meeting. All the bidder's queries shall be replied to in the pre-bid meeting. In case any change is required in the tender document the same shall be affected in the form of corrigendum to this tender. The bidder or their representatives who intend to bid and who have either purchased tender documents or will pay tender fees for downloaded documents are invited to attend the pre-bid meeting. Corrigendum, if any, to the tender document shall be hosted on the website subsequent to the pre-bid meeting. Bidders are requested to submit their offer strictly in line with this tender document& corrigendum if any.

6. BID SUBMISSION

6.1 BSES will carry out E-Procurement through its e-procurement portal (https://srmprdportal.bsesdelhi.com/irj/portal). Interested Non-registered bidders are requested to obtain the portal user name and password (if not available) for bid submission. For participating in e-Tenders of BRPL, please write a mail to: Ms. Anima Gaur E-mail: anima.gaur@reliancegroupindia.com, with your details as per below:

a) Existing Vendor Code with BRPL or its Group/Associates Companies (if available):

b) Trade Name: ……..

c) Address of Principal Place of Business: ……..

d) Contact Person's Name: ……..

e) Contact Person's Designation: ……..

f) Contact Person's Mobile No.: ……..

g) Contact Person's email ID: ……..

h) Also, attach a valid copy of Power of Attorney in favour of mentioned Contact Person for being authorized to receive user ID and password on behalf of their organization.

The login ID details shall be sent through email to the email ID mentioned by you for the same.

6.2 Bids shall be submitted in 2 (Two) parts on the assigned folder of the e-procurement site. Please refer to the user manual available at **https://srmprdportal.bsesdelhi.com:50001/irj/portal**

6.3 This is a two part bid process. Bidders are to upload the bids (a) Technical Bid (b) Price Bid on website.

The Part-I TECHNO-COMMERCIAL BID, UNPRICED:- Technical Commercial Bid should not contain any cost information whatsoever. In case of Bids where the qualification requirements, technical suitability and other requirements are found to be inadequate, Part-II "Financial Bid" will not be opened. The details to be submitted in techno-commercial bids are given below:

- General information about bidder
- Documentary evidence in support of all the qualifying criteria as per clause 4.0,
- EMD of requisite amount
- Non-refundable separate demand draft for Rs. 1180/- In case the forms are downloaded from the website
- Technical Literature if any.
- Details of experience of works of the same or similar nature. Copy of work orders and performance certificates.
- Power of attorney
- Acceptance to Commercial Terms and Conditions viz Delivery schedule/period, Payment terms, BG etc
- Any other relevant document to support bidder meeting QR

Techno-Commercial Bid should not contain any cost information whatsoever and shall be submitted within the due date. After techno-commercial evaluation, the list of techno-commercially qualified bidders will be posted immediately on the BSES website.

The bidder should submit complete tender document along with all corrigendum (if any)

published against this NIT at our website, signed and stamped with bidder's seal as an acceptance of all the terms & conditions of the Tender.

- **The Part-II PRICE BID:-** Qualified bidders will be intimated after technical evaluation of all the bids is completed. The date and time of same shall be intimated in due course to the qualified bidders. Notwithstanding anything stated above, the Purchaser reserves the right to assess bidder's capability to perform the contract, should the circumstances warrant such assessment in the overall interest of the purchaser. In this regard the decision of the purchaser is final.
    - **PRICE BID** shall Comprise of Prices **strictly** in the Format enclosed in SECTION VI. Any change in price bid format, content may lead to rejection of the bid.
    - Price Bid will be opened after techno-commercial evaluation of all the bids and only of the qualified bidders.

Bids have to be mandatorily submitted only through the e-procurement portal of BSES Delhi. Bids submitted through any other form/ route shall not be admissible. However, documents that necessarily have to be submitted in originals like EMD or Tender Fee (in the form of BG as applicable) and any other documents mentioned in the tender documents have to be submitted at the BRPL office before the due date and time of submission. Please mention the NIT No ……. on sealed envelope of EMD and DD and submit the documents on following address (scanned copy of EMD and Tender Fee to be uploaded on e-procurement portal):

HEAD OF THE DEPARTMENT, 1st FLOOR, 'C' BLOCK,

CONTRACTS & MATERIALS DEPARTMENT, BSES RAJDHANI POWER LTD,

BSES BHAWAN, NEHRU PLACE,

NEW DELHI- 110019.

6.3.3 FINANCIAL BID EVALUATION THROUGH REVERSE AUCTION

Reverse Auction (RA) shall be conducted for finalization of contract and the details of the price bid shall not be shared with bidders. The qualified bidders will participate in reverse auction through SAP-SRM tool. The RA process shall be governed by the terms and conditions enclosed as Annexure-III in this tender document. Training/details shall be provided to bidders before participation in auction. In case RA is not conducted /concluded for any reasons, a "final no regret" financial bid in a sealed envelope will be called for from all qualified bidders. Notwithstanding anything stated above, the Company reserves the right to assess bidders' capability to perform the contract, should the circumstances warrant such assessment in the overall interest of the Company. In this regard, the decision of the Company shall be final and binding on the bidders.

BIDS RECEIVED AFTER THE DUE DATE AND TIME MAY BE LIABLE FOR REJECTION.

7. TIME SCHEDULE

The activities and their timelines are given hereunder which needs to be adhered by the bidders.

S. No.	Activity	Description	Due date
1	Submission of Technical & Commercial Queries, if any	All Queries related to NIT	28-07-2026
2	Pre-Bid Meeting	Discussion on pre-bid queries	29-07-2026

3	Submission of Techno-Commercial & Price Bid	Unpriced Techno-Commercial & Price Bid in separate sealed envelopes	10-08-2026
4	Opening of Techno-Commercial Bid	Opening of PART-A	10-08-2026
5	Opening of Price Bid	Opening of PART-B of only the techno-commercially qualified bidders (List of bidders will be published at our website)	To be informed separately
6	Reverse Auction	As per RA terms	Schedule will be intimated to eligible bidders through email from email id: BRPL.Eauction@relianceada.com

8. AWARD DECISION

8.1 Company intends to award the business on a lowest bid basis, so bidders are encouraged to submit the bid competitively. The decision to place order/LOI solely depends on Company on the cost competitiveness across multiple lots, quality, delivery and bidder's capacity, in addition to other factors that Company may deem relevant.

8.2 The Company reserves all the rights to award the contract to one or more bidders who meet the execution requirement or nullify the award decision without assigning any reason thereof.

8.3 In case the performance of any contractor is found unsatisfactory during the execution process, the award will be cancelled and BRPL reserves the right to award the work to another contractor(s) who will be found eligible/fit.

8.4 The abnormally higher or abnormally lower bids shall not be considered with respect to estimated cost. The criteria decided by BRPL on this shall be final and binding on the bidders.

8.5 The bidding firms are advised to quote their Margin / Administrative Service Charges accordingly. BRPL reserves the right to reject the bids quoted with abnormally higher or abnormally lower individual activity rates. The criteria decided by BRPL on this shall be final and binding on the bidders and will not be open for discussion under any circumstances.

9 MARKET INTEGRITY

We have a fair and competitive marketplace. The rules for the bidders are outlined in the Terms & Conditions of the tender documents. Bidders must agree to these rules prior to participating in the tender. In addition to other remedies available, we reserve the right to exclude a bidder from participating in future markets due to the bidder's violation of any of the rules or obligations contained in the Terms & Conditions. Bidder(s) who violate the marketplace rules or engage in behaviour that disrupts the fair execution of the marketplace restricts a bidder from participation in future tenders of BRPL to a length of time as decided by BRPL, depending upon the seriousness of the violation. Examples of violations include, but are not limited to:

- Failure to honour prices submitted to the market place.
- Breach of the terms published in Request for Quotation/NIT
- Misrepresentation of facts, submitting false and fabricating documents

10 CONFIDENTIALITY

All information contained in this tender document is confidential and may not be disclosed, published or advertised in any manner without written authorization from BRPL. This includes all bidding information submitted.

All tender documents remain the property of BRPL and all bidders are required to return these documents to BRPL upon request.

Bidder(s) who do not honour these confidentiality provisions will be excluded from participating in future bidding events.

The bidder shall sign a Non-Disclosure Agreement (NDA) in the format attached in tender document and submit along with its bid.

11 CONTACT INFORMATION

Technical & Commercial clarification, if any, regarding this tender shall be sought in writing and sent by e-mail to the following e-mail IDs:

Address	Name/ Designation	E-mail Address / Phone Number
Technical		
Shifting of 66 kV O/H Feeder from 220 kV Okhla to Malviya nagar circuit no 1 & 2 from DMRC casting Yard near Pushpa Bhawan to Khanpur T Point for construction of DMRC L-11 corridor from G Block Saket to Lajpat Nagar - Scheme No: ES26SH1003	Mr. Devender Patidar	Devendra.patidar@reliancegroupindia.com
	GM	08010609398
	Mr. Nirjendu Pandey Head – EHV(P&C)	Nirjendu.Pandey@reliancegroupindia.com
		011-49209323
	Mr. Anupam	Anupam O Kumar/REL/RelianceADA.
	AsVP – (CES Team)	9015192787
	All technical queries shall also be marked copy to Commercial team as per the details below.	
Commercial		
C&M Dept,	Ms. Anima Gaur	anima.gaur@reliancegroupindia.com
1st Floor, C Block,	DGM-(Contracts)	011-49209429
BSES Rajdhani Power Ltd		
BSES Bhawan, Nehru Place,	Mr. Amitava Nandi,	Amitava.Nandi@reliancegroupindia.com
New Delhi – 110019.	AsVP – (Head Contracts)	011-4920 9619

BSES

SECTION-II : INSTRUCTIONS TO BIDDERS (ITB)

BSES

SECTION-II

INSTRUCTIONS TO BIDDERS (ITB)

1. GENERAL

BSES RAJDHANI Power Ltd (BRPL), hereinafter referred to as the "Company" is desirous for awarding work of "Shifting of 66 KV O/H Feeder from 220 KV Okhla to Malviya nagar circuit no 1 & 2 from DMRC casting Yard near Pushpa Bhawan to Khanpur T Point for construction of DMRC L-11 corridor from G Block Saket to Lajpat Nagar. - Scheme No: ES26SH1003.

1.1 All the Bids shall be prepared and submitted in accordance with these instructions.

1.2 Bidder shall bear all costs associated with the preparation and delivery of its Bid, and the Company will in no case shall be responsible or liable for these costs.

1.3 The Bid should be submitted by the Bidder in whose name the bid document has been issued and under no circumstances it shall be transferred /sold to the other party.

1.4 The Company reserves the right to request for any additional information/documents and also reserves the right to reject the proposal of any Bidder, if in the opinion of the Company, the data in support of RFQ requirement is incomplete.

1.5 The Bidder is expected to examine all instructions, forms, terms & conditions and specifications in the Bid Documents. Failure to furnish all information required in the Bid Documents or submission of a Bid not substantially responsive to the Bid Documents in every respect may result in rejection of the Bid. However, the Company's decision in regard to the responsiveness and rejection of bids shall be final and binding without any obligation, financial or otherwise, on the Company.

1.6 The company reserves the right to split the order among various successful bidders in any manner it chooses without assigning any reason whatsoever.

2. SCOPE OF WORK

Detailed specification/scope of work is provided in Section-V of this tender document.

3. DISCLAIMER

3.1. This NIT is not an agreement and further it is neither an offer nor an invitation by BRPL to bidders or any other person for award of contract. The purpose of this NIT is to provide bidders information that may be useful to them in the preparation and submission of their bids.

3.2. This Document includes statements, which reflect various assumptions, which may or may not be correct. Each Bidder should conduct its own estimation and analysis and should check the accuracy, reliability and completeness of the information in this Document and obtain independent advice from appropriate sources in their own interest.

3.3. Neither Company nor its employees will have any liability whatsoever to any Bidder or any other person under the law or contract, the principles of restitution or unjust enrichment or otherwise for any loss, expense or damage whatsoever which may arise from or be incurred or suffered in connection with anything contained in this Document, any matter deemed to form part of this Document, provision of Services and any other information supplied by or on behalf of Company or its employees, or otherwise arising in any way from the selection process for the Work.

3.4. Though adequate care has been taken while issuing the Tender document, the Bidder should satisfy itself that Documents are complete in all respects. Intimation of any discrepancy shall be given to this office immediately.

3.5. This Document and the information contained herein are Strictly Confidential and are for the use of only the person(s) to whom it is issued. It may not be copied or distributed by the recipient to third parties (other than in confidence to the recipient's professional advisors).

3.6. It shall be deemed that by submitting a bid, a bidder agrees to release BRPL and its employees, agents and advisors irrevocably unconditionally fully and finally from any and all liability for any claims losses damages costs expenses or liabilities in anyway related to or arising from exercise of any rights and all performance of any obligations under this NIT and or in connection with the bid process to the fullest extent permitted by applicable law and waives any and all rights and all claims it may have in this respect whether actual or contingent whether present or in the future

3.7. BRPL and its employees and advisors also accept no liability of any nature whether resulting from negligence or otherwise arising from reliance of any bidder upon the contents of this NIT. BRPL may in its absolute discretion but without being under any obligation to do so, update amend or supplement the information assessment statement or assumptions contained in this NIT.

3.8. The issue of this tender document does not imply that BRPL is bound to qualify any bidder or to award the contract to any bidder. BRPL reserves the right to reject all or any of the bids without assigning any reasons whatsoever.

4. COST OF BIDDING

The Bidder shall bear all cost associated with the preparation, submission and processing of its Bid and the company will in no case be responsible or liable for the costs.

5. TENDER DOCUMENTS

5.1. The Scope of Work, Bidding Procedures and Contract Terms are described in the Bidding Documents. In addition to the covering letter accompanying Bidding Documents, the Bidding Documents include:

"Check List, Sections, Annexure & Formats as elaborated in CONTENT of this NIT."

5.2. The bidder is expected to examine the tender documents, including all Instructions, Forms, Terms and Specifications. Failure to furnish all information required by the tender documents or submission of a bid not substantially responsive to the tender documents in every respect may result in the rejection of the Bid.

6. AMENDMENT OF TENDER DOCUMENTS

6.1. At any time prior to the deadline for submission of Bids, the Company may for any reason(s), whether at its own initiative or in response to a clarification requested by a prospective Bidder, alter/amend/modify the tender documents by corrigendum /amendment.

6.2. The corrigendum / amendment shall be part of tender document, pursuant to Clause 5.1, and it will be notified

(a) By way of uploading the corrigendum/amendment on BSES website (in case of public tender),

(b) In writing by e-mail to all the Bidders who have received the Bidding Documents by email. (In case of limited tender)

All such corrigendum & amendments will be binding on the bidders.

6.3. In order to provide prospective Bidders a reasonable time in which to take the Amendment into account in preparing their Bids, the Company may, at its discretion, extend the deadline for the submission of Bids.

7. PREPARATION OF BIDS & LANGUAGE

The Bid prepared by the Bidder, and all correspondence, documents etc. relating to the Bid

exchanged by the Bidder and the Company shall be written in English Language. Any printed literature furnished by the Bidder may be written in another Language, provided that this literature is accompanied by English translation, in which case, for purposes of interpretation of the Bid. In case of ambiguity in the English translation, interpretation of the Company as regards to translation will be final.

8. DOCUMENTS COMPRISING THE BID

The Bid prepared and submitted by the Bidder shall comprise the following components:

(a) Techno-Commercial Bid & Price Bid as elaborated in RFQ. (STRICTLY AS PER FORMAT)

(b) All the Bids must be accompanied with the required EMD &Tender Fees against each tender.

9. BID FORM

The Bidder shall complete "Original" Bid Form and submit it along with details mentioned in Techno-Commercial bid (without filling price).

10. BID PRICES

Bidders shall quote for the entire Scope of work with prices for individual items. The bidder is required, at his expense, to obtain all the information he may require to enable him to submit his tender including necessary visits to the site to ascertain the local conditions, procurement of necessary materials, labour, etc., requirements of the local/government/public authorities in such matters.

11. BID CURRENCIES

Prices shall be quoted in Indian Rupees Only.

12. PERIOD OF VALIDITY OF BIDS

12.1. Bids shall remain valid & open for acceptance for a period of 180 days from the date of opening of the Bid.

12.2. Notwithstanding above, the Company may solicit the Bidder 's consent to an extension of the Period of Bid Validity and the bidder shall be liable to extend the same at the sole cost and consequences of the bidder and no claim from the company in this regard shall be maintainable.

13. ALTERNATIVE BIDS

Bidders shall submit Bids, which comply with the Tender Documents. Alternative Bids will not be considered. The attention of Bidders is drawn to the provisions regarding the rejection of Bids in the terms and conditions, which are not substantially responsive to the requirements of the Tender Documents.

14. FORMAT AND SIGNING OF BID

14.1. The original Bid Form and accompanying documents (as specified in Clause 9.0), clearly marked "Original Bid", must be received by the Company at the date, time and place specified in Section-I, RFQ.

14.2. The original copy of the Bid shall be typed or written in indelible ink and shall be signed by the Bidder or a person or persons duly authorized to sign on behalf of the Bidder. Such authorization shall be indicated by written Power-of-Attorney accompanying the Bid. All pages of the bid shall be signed by the signatory accompanied with seal of the Agency.

14.3. The Bid shall contain no interlineations, erasures or overwriting except as necessary to correct errors made by the Bidder, in which case such corrections shall be signed by the person or persons signing the Bid.

15. SEALING AND MARKING OF BIDS

15.1. All the Bid Documents shall be uploaded on website before the closing time for submission of the bid.

15.2. The EMD and tender fee shall be enclosed in a sealed envelope and the said envelope shall be superscribed with — Tender Fee & EMD and "Tender Notice no., Due date of submission, Tender opening date.

15.3. Bid Documents submitted by Telex/ Telegram/ Fax will not be accepted. No request from any Bidder to the Purchaser to collect the proposals from Airlines/Cargo Agents etc shall be entertained by the Purchaser.

16. DEADLINE FOR SUBMISSION OF BIDS

16.1. The Bid Documents must be received by the Purchaser at the address specified not later than 15:30 HRS on 10.08.2026

16.2. The Company may, at its discretion extend the deadline for the submission of bids by amending the Tender Documents in accordance with Clause 6.0, in which case all rights and obligations of the Company and Bidders previously subject to the deadline will thereafter be subject to the deadline as extended.

17. ONE BID PER BIDDER

Each Bidder shall submit only one Bid by itself. A Bidder who submits or participates in more than one Bid will cause all those Bids to be rejected.

18. LATE BIDS

Any Bid received by the Company after the deadline for submission of Bids prescribed by the Company, pursuant to Clause 16.0, will be declared "Late" and rejected and returned unopened to the Bidder.

19. MODIFICATIONS AND WITHDRAWAL OF BIDS

The Bidder is not allowed to modify or withdraw its Bid after the due date of bid submission.

20. EVALUATION OF BID

20.1. The bids will be evaluated techno-commercially on compliance to tender terms and Conditions.

20.2. BRPL reserves the right to ask the bidders to provide any additional information including breakup of the prices as quoted by them against line items.

21. CLARIFICATION OF BIDS

To assist in the examination, evaluation and comparison of Bids, the Company may, at its discretion, ask the Bidder for a clarification of its Bid. All responses to requests for clarification shall be in writing and no change in the price or substance of the Bid shall be sought, offered or permitted

22. PRELIMINARY EXAMINATION OF BIDS / RESPONSIVENESS

22.1. Company will examine the Bids to determine whether they are complete, whether any computational errors have been made, whether required sureties have been furnished, whether the documents have been properly signed, and whether the Bids are generally in order.

22.2. Arithmetical errors will be rectified on the following basis. If there is a discrepancy between the unit price and the total price per item that is obtained by multiplying the unit price and quantity, the unit price shall prevail and the total price per item will be corrected. If there is a discrepancy

between the Total Amount and the sum of the total price per item, the sum of the total price per item shall prevail and the Total Amount will be corrected.

22.3. Company will determine the substantial responsiveness of each Bid to the Tender Documents including execution capability and acceptable quality of the services offered. A substantially responsive Bid is one, which conforms to all the terms and conditions of the Tender Documents without deviation.

22.4. Bid determined as not substantially responsive will be rejected by the Company and may not subsequently be made responsive by the Bidder by correction of the non-conformity.

23. EVALUATION AND COMPARISON OF BIDS

23.1. The evaluation of Bids shall be done based on the delivered cost competitiveness basis.

23.2. The evaluation of the Bids shall be a stage-wise procedure. The following stages are identified for evaluation purposes: In the first stage, the Bids would be subjected to a responsiveness check later on the Techno-Commercial Proposals and the Conditionality of the Bidders would be evaluated.

Subsequently, the Financial Proposals along with Supplementary Financial Proposals, if any, of Bidders with Techno-commercially Acceptable Bids shall be considered for final evaluation.

23.3. The Company's evaluation of a Bid will take into account, in addition to the Bid price, the following factors, in the manner and to the extent indicated in this Clause:

(a) Contract completion schedule
(b) Conformance to Qualifying Criteria
(c) Deviations from Tender Documents
(d) Conformity and compliance to the conditions/details provided in pre-bid meeting
(e) Change in the quantity from mentioned in the tender

23.4. The cost of all quantifiable deviations and omissions from the specification, terms and conditions specified in Tender Documents shall be evaluated.

23.5. The Company will make its own assessment of the cost of any deviation for the purpose of ensuring fair comparison of Bids.

23.6. Adjustments in price, if any, based on the above procedures, shall be made for the purposes of comparative evaluation only to arrive at an "Evaluated Bid Price". Bid Prices quoted by Bidders shall remain unaltered.

24. CONTACTING THE COMPANY

24.1. From the time of Bid opening to the time of contract award, if any Bidder wishes to contact the Company on any matter related to the Bid, it should do so in writing.

24.2. Any effort by a Bidder to influence the Company and/or in the Company's decisions in respect of Bid evaluation, bid comparison or Contract Award, will result in the rejection of the Bidder 's Bid.

25. COMPANY'S RIGHT TO ACCEPT ANY BID AND TO REJECT ANY OR ALL BIDS

The Company reserves the right to accept or reject any Bid and to annul the Bidding process and reject all Bids at any time prior to award of Contract, without thereby incurring any liability to the affected Bidder or Bidders or any obligation to inform the affected Bidder or Bidders of the grounds for the Company's action.

26. AWARD OF CONTRACT

The Company will award the Contract to the successful Bidder whose Bid has been determined to be the lowest-evaluated responsive Bid, provided the Bidder has been determined to be qualified to satisfactorily perform the Contract. Company reserves the right to award order to other bidders in the tender, provided it is required for need of the work. The full or part of the contract may be awarded to other bidder(s) on differential rates.

27. THE COMPANY'S RIGHT TO VARY QUANTITIES

The Company reserves the right to vary the quantity i.e. increase or decrease the Numbers/ quantities without any change in terms and conditions before the award of Contract. Further BRPL may increase or reduce the area/ scale of operations / increase or decrease the Numbers/ quantities after the start of work execution under the contract and the size of contract / contract value shall be adjusted accordingly. In case of decrease in base resources decided mutually then contract value will be adjusted accordingly.

28. LETTER OF INTENT/ NOTIFICATION OF AWARD

The letter of intent/ Notification of Award shall be issued to the successful Bidder whose bids have been considered successful for award of work/order.

The successful Bidder shall be required to furnish acceptance of LOI / notification of award within 7 days of issue of the letter of intent /Notification of Award by Company.

29. CORRUPT OR FRAUDULENT PRACTICES

29.1. The Company requires that the Bidders observe the highest standard of ethics during the entire period of work execution under the Contract. In pursuance of this policy, the Company:

(a) Defines, for the purposes of this provision, the terms set forth below as follows:

"Corrupt practice" means behaviour on the part of officials in the public or private sectors by which they improperly and unlawfully enrich themselves and/or those close to them, or induce others to do so, by misusing the position in which they are placed, and it includes the offering, giving, receiving, or soliciting of anything of value to influence the action of any such official in the procurement process or in contract execution; and "Fraudulent practice" means a misrepresentation of facts in order to influence a award process or the execution of a contract to the detriment of the Company, and includes collusive practice among Bidders (prior to or after Bid submission) designed to establish Bid prices at artificial non-competitive levels and to deprive the Company of the benefits of free and open competition.

(b) Will reject a proposal for award if it determines that the Bidder recommended for award has engaged in corrupt or fraudulent practices in competing for the contract in question;

(c) Will declare a firm ineligible either indefinitely or for a stated period of time, to be awarded a contract if it at any time determines that the firm has engaged in corrupt or fraudulent practices in competing for, or in executing, a contract.

29.2. Furthermore, It shall be the responsibility of the Bidders to read and understand &aware of the provision stated in the Terms and Conditions of tender before participating in the tender.

30. PROCESS TO BE CONFIDENTIAL

Information relating to the examination, clarification, evaluation and comparison of Bids and recommendations for the award of a contract shall not be disclosed to Bidders or any other persons not officially concerned with such process. Any effort by a Bidder to influence the Company's processing of Bids or award decisions may result in the rejection of the Bidder's Bid.

*****

BSES

SECTION – III : SPECIAL CONDITIONS OF CONTRACT (SCC)

SECTION – III (A):

SPECIAL CONDITIONS OF CONTRACT (SCC) A:

These Special Conditions of Contract (SCC) shall be read in conjunction with the Terms and Conditions of the Contract, General Conditions of Contract (GCC), Scope of Work and other documents forming part of the contract wherever the context so requires. Notwithstanding the subdivision of documents into separate sections and volumes, every part of each such document shall be deemed to be supplementary to and complementary of every other part.

1. DEFINITIONS

ENGINEER IN-CHARGE (EIC) / OFFICER-IN-CHARGE (OIC)

The term "Engineer-in-charge (EIC)/Officer-in-Charge (OIC)" shall mean the Company's nominated representative for the purpose of supervision of the execution of the Contract. The same shall be mentioned in the Contract.

2. SCOPE OF WORK- SUPPLY

The "Scope of Supply" shall be on the basis of Bidder's responsibility, completely covering the obligations, responsibility and supplies provided in this Bid enquiry whether implicit or explicit.

a) Bidder shall have to quote for the Bill of quantities as listed herewith.

b) All relevant drawings, data and instruction manuals of supply of miscellaneous material shall be scope of bidder.

c) Other petty and miscellaneous material required to execute the work at site shall be in the scope of bidder.

d) Qty Variation: The Bidder/purchaser reserves the rights to vary the quantity by (+/-) 30% of the supply of items quantity as per Section V.

3. QUALITY ASSURANCE AND INSPECTION:

3.01 Immediately on award of contract, the bidder shall prepare detailed quality assurance plan/test procedure identifying the various stages of manufacture, quality checks performed at each stage, raw material inspection and the Customer hold points. The document shall also furnish details of method of checking, inspection and acceptance standards / values and get the approval of Purchaser before proceeding with manufacturing. However, Purchaser shall have right to review the inspection reports, quality checks and results of suppliers in house inspection department which are not Customer hold points and the supplier shall comply with the remarks made by purchaser or his representative on such reviews with regards to further testing, rectification or rejection, etc. In case of standard items, BRPL shall forward the standard QAP which is to be followed by vendor during manufacturing.

3.02 Witness and Hold points are critical steps in manufacturing, inspection and testing where the supplier is obliged to notify the Purchaser in advance so that it may be witnessed by the Purchaser. Final inspection is a mandatory hold point. The supplier can proceed with the work past a hold point only after clearance by purchaser or a witness waiver letter from BRPL.

3.03 The performance of waiver of QA activity by Purchaser at any stage of manufacturing does not relieve the supplier of any obligation to perform in accordance with and meet all the requirements of the procurement documents and also all the codes & reference documents mentioned in the procurement document nor shall it preclude subsequent rejection by the purchaser.

3.04 On completion of manufacturing the items can only be dispatched after receipt of dispatch instructions issued by the Purchaser.

3.05 All in-house testing and inspection shall be done without any extra cost. The in-house inspection shall be carried out in presence of BRPL/BRPL authorized third party inspection agency. Cost of Futile/abortive visit(s) shall be debited from the invoices.

3.06 Purchaser reserves the right to send any material being supplied to any recognized laboratory for testing, wherever necessary and the cost of testing shall be borne by the Bidder. In case the material is found not in order with the technical requirement / specification, the charges along with any other penalty which may be levied is to be borne by the bidder. To avoid any complaint the supplier is advised to send his representative to the stores to see that the material sent for testing is being sealed in the presence of bidder's representative.

4.0 Packing, Packing List & Marking

4.01 **Packing:** Supplier shall pack or shall cause to be packed all Commodities in crates/boxes/drums/containers/cartons and otherwise in such a manner as shall be reasonably suitable for shipment by road or rail to BRPL, Delhi/New Delhi stores/site without undue risk of damage in transit.

4.02 **Packing List:** The contents of each package shall be itemized on a detailed list showing the exact weight, extreme outside dimensions (length, width & weight) of each container/box/drum/carton, Item SAP Code, PO No & date. One copy of the packing list shall be enclosed in each package delivered.

5.0 Price basis for supply of materials

Bidder has to quote their prices on Landed Cost Basis and quote separate price for each item.

FIRM prices for supply to BRPL Delhi/New Delhi stores inclusive of packing, forwarding, loading at manufacturer's premises, payment of all taxes, GST, Freight, any other local charges etc.

The above supply prices shall also include unloading at BRPL Delhi/New Delhi stores/site. Transit insurance will be arranged by bidder.

6.0 Terms of payment and billing – SUPPLY

a) 80 % against R/A bills for supply of equipment and materials within 30 days against receipt of material at site and submission of following documents duly certified by BRPL Project-in-charge:
   i. Consignee copy of LR
   ii. Detailed invoice showing commodity description, qty, unit & total price,
   iii. Original certificate issued by BRPL confirming receipt of material at site & acceptance
   iv. Dispatch clearance & inspection report issued by the inspection authority
   v. Packing List, Test Reports
   vi. Guarantee Certificate.

b) 10% pro-rata after installation/erection of equipment duly certified by BRPL Project-in-charge.

c) 10% pro-rata after completion of successful acceptance testing, commissioning and handing over of the entire Installation and duly certified by BRPL Project-in-charge.

7.0 Price Validity

7.01 All bids submitted shall remain valid, firm and subject to unconditional acceptance by BRPL Delhi for 120 days from the due date of submission & subsequent corrigendum/amendment/extension of due date of submission. For awarded suppliers/contractors, the prices shall remain valid and firm till contract completion.

8.0 Contract Performance Bank Guarantee:

8.1 CONTRACTOR shall furnish the Contract Performance Bank Guarantee in the prescribed format (Appendix I) within 15 days from the date of issue of Order for due performance of the provisions of purchase Order.

The contract Performance Bank Guarantee shall be given below table -1 and shall be valid till the completion of defect liability period plus three (3) months or latest RBI guidelines (if any)

whichever is higher towards claim period, if not otherwise specified in agreement. This amount shall remain fixed during the currency of the agreement.

Table -1 (CPBG required for given below Scheme for Supply)		
Sr. No.	Scheme Details	CPBG Amount of Supply in Rs.
1	Scheme No: ES26SH1003	15,36,546 /-

8.1 The CPBG shall be issued from any nationalized / scheduled bank as per company format.

8.2 The Company shall reserve the right to invoke the CPBG unconditionally and without recourse to the Contractor, if there is failure to perform any part of the Agreement for whatsoever reason. This clause is pertaining to performance of contractual obligations and the decision of Company shall be final in this regard.

8.3 In the event of any claim or any other outstanding Contractual obligations remaining unfulfilled, the Contractor shall be required to extend the CPBG till the settlement of all claims and completion of all Contractual obligations at the cost and consequences of contractor.

8.4 In the event, in Company's sole judgement, the Contractor has fulfilled all its obligations under this Agreement, The CPBG shall be released without any interest after the expiry of CPBG and its claim period as mentioned above.

8.5 If the CPBG is or becomes invalid for any reason (other than its expiry), the Contractor shall immediately notify the Company/BRPL and provide within five (5) days a replacement CPBG in the form set out in the Contract/Agreement.

8.6 Not later than sixty (60) Business Days before the expiry of the CPBG, the Contractor shall, upon request of the Company/BRPL obtain extension of the validity of such CPBG for the period stated in such request by the Company/BRPL and provide a copy of such renewed CPBG.

It is Contractor's responsibility to incur charges / cost to maintain and for extension of CPBG without claiming reimbursement from the company/BRPL.

9.0 Forfeiture

9.01 Each Performance Bond established under Clause 10.0 shall contain a statement that it shall be automatically and unconditionally forfeited without recourse and payable against the presentation by BRPL of this Performance Bond, to the relevant bank referred to above, together with a simple statement that supplier has failed to comply with any term or condition set forth in the Contract.

9.02 Each Performance BG established under will be automatically and unconditionally forfeited without recourse if BRPL at its sole discretion determines that supplier has failed to comply with any term or condition set forth in the contract.

10.0 Release

All Performance Bonds will be released without interest within seven (7) days from the last date up to which the Performance Bond has to be kept valid (as defined in Clause 10.0) except for the case set forth in Clause 21.0.

11.0 Guarantee of Performance

The bidder shall stand guarantee that the equipment and material supplied/service or work rendered under the contract is free from design, manufacturing, material, construction, erection & installation and workmanship & quality defects and is capable of its due, rated and intended quality performance, as an integrated product delivered under the contract for a specific period termed as Guarantee Period. The bidder should also guarantee that the equipment/material is new and unused except for the usage required for the tests and checks required as part of quality assurance.

12.0 Guarantee Period/Defects Liability Period

The Guarantee Period will be equipment/service/work specific and shall be as specified in the Technical Specifications for the equipment/material/service/work and where Technical specifications are not part of contract documents or guarantee period is not specified in the Technical specifications, the guarantee period shall be as per the Special Terms and Conditions of the Contract. In case of no mention of the guarantee period in Technical specifications, Defect liability period will be 12 Months from the Date of Commissioning or 18 months from the date of delivery of final lot of supplies made, whichever is later.

If during the defects liability period any materials / items are found to be defective, these shall be replaced or rectified by the bidder at his own cost within 30 days from the date of receipt of intimation.

13.0 Cost of repairs on failure in Guarantee Period:

The cost of repairs/rectification /replacement, apart from the actual cost of repairs/rectification/replacement is also inclusive of all bidder costs of required transportation, site inspection /mobilization/dismantling and re-installation costs as applicable, to be borne by the bidder. The bidder has to ensure that the interruption in the usage of intended purpose of the equipment is minimized to the maximum extent In lieu of the time taken for repairs/rectification/replacement.

14.0 Latent Defect:

Hidden defects in manufacturing or design of the product supplied and which could not be identified by the tests conducted but later manifested during operation of the equipment are termed as latent defects. Bidder shall further be responsible for 'free replacement' for another period of FIVE years from the end of the guarantee period for any 'Latent Defects' if noticed and reported by the Purchaser.

Support beyond the Guarantee Period

14.01 The Bidder shall ensure availability of spares and necessary support for a period of at least 10 years post completion of guarantee period of equipment /technology supplied against this contract. BRPL shall be duly intimated by the Vendor of End of Life Support for the product /technology supplied at least 12 months in advance.

15.0 Return, Replacement or Substitution

BRPL shall give Supplier notice of any defective Commodity promptly after becoming aware thereof. BRPL may at its discretion elect to return defective Commodities to Supplier for replacement, free of charge to BRPL, or may reject such Commodities and purchase the same or similar Commodities from any third party. In the latter case BRPL shall furnish proof to Supplier of the cost of such substitute purchase. In either case, all costs of any replacement, substitution, shipping, labour and other related expenses incurred in connection with the return and replacement or for the substitute purchase of a Commodity hereunder should be for the account of Supplier. BRPL may set off such costs against any amounts payable by BRPL to Supplier. Supplier shall reimburse BRPL for the amount, if any, by which the price of a substitute Commodity exceeds the price for such Commodity as quoted in the Bid.

16.0 Effective Date of Commencement of Contract:

The date of the issuance of the Letter of Acceptance/Purchase Order shall be treated as the effective date of the commencement of Contract.

17.0 Time – The Essence of Contract:

Time is the essence of the contract and the contractor shall be responsible for performance of his works in accordance with the specified schedule. If at any time, the contractor is falling behind the schedule for reasons attributable to him, he shall take necessary action to make good for such delays by increasing his work force or by working overtime or otherwise to accelerate the progress of the work and to comply with schedule timelines and shall communicate such actions in writing to the company, to the satisfaction of the Company that his action will compensate for the delays. The contractor shall not be allowed any extra compensation for such actions.

Time shall be the essence of the Contractor. Contractor shall complete his work in accordance with the specified time-lines/ Schedules as per the terms of the contract or as may be instructed by the Company from time to time.

18.0 The Laws and Jurisdiction of Contract:

The laws applicable to this Contract shall be the Laws in force in India. To the best of their ability, the parties hereto shall endeavor to resolve amicably between themselves all disputes arising in connection with this work order. If the same remain unresolved within thirty (30) days of the matter being raised by either party, either party may refer the dispute for adjudication by arbitration. The arbitration shall be undertaken by the sole arbitrator jointly appointed by the parties. In case the parties fail to arrive at consensus to appoint the sole arbitrator, either party may approach the Court for appointing an arbitrator under Section 11 of the Arbitration and Conciliation Act, 1996 and the award of the said sole arbitrator, shall be final and binding upon the parties. The arbitration proceeding shall be conducted in accordance with this provisions of the Indian Arbitration & Conciliation Act, 1996 (as amended up to date) and the venue of such arbitration shall be the city of New Delhi only. The Arbitration shall be conducted in English language only. The courts at Delhi shall have the exclusive jurisdiction over the subject matter of Arbitration/dispute. The cost of the Arbitration shall be equally shared by the parties as per directions of the Sole Arbitrator.

19.0 Events of Default

19.01 Company may, without prejudice to any of its other rights or remedies under the Contract or in law, terminate the whole or any part of this Contract by giving written notice to the Contractor, if in the opinion of Company, contractor has neglected to proceed with the Contracts with due diligence or commits a breach of any of the provisions of this Contract including but not limited to any of the following cases:

A) Failing to complete execution of Contract as per the terms and conditions specified in the Contract.

B) Failing to complete Contracts in accordance with the approved schedule of Contract.

C) Failing to comply with any reasonable instructions or orders issued by Company in connection with the Contract.

D) Failing to comply with any of the terms or conditions of this Contract.

E) In the event Company terminates this Contract, in whole or in part, on the occurrence of any event of default, Company reserves the right to engage any other vendor or agency to complete the Contract or any part thereof, and in addition to any other right Company may have under the Contract or in law including without limitation, including the right to penalize for delay under clause “Liquidated Damage” of this Contract , the contractor shall be liable to Company for any additional costs that may be suffered/borne by Company for the execution of the Contract.

F) Failure on the part of the Contractor to maintain its confidentiality obligations and or compromising its integrity, which are required to be of highest standards, in so far as the present scope of work is concerned.

20.0 Consequences of Default

(a) If an Event of Default shall occur and be continuing, BRPL may forthwith terminate the Contract by written notice.

(b) In the event of an Event of Default, BRPL may, without prejudice to any other right granted to it by law, or the Contract, take any or all of the following actions;

(i) present to Bank for forfeiture to the relevant bank the Performance Bond;

(ii) Purchase the same or similar Commodities from any third party; and/or

(iii) Recover any losses and/or additional expenses BRPL may incur as a result of Supplier's default.

21.0 Liquidated Damages

21.01 In the event of any delay in completion of the work beyond the stipulated time given by in order due to reasons solely attributable to the Contractor, the Contractor shall pay to the Company liquidated damages.

If the Contractor failed perform the services within the time period specified in the order, the Company shall, without prejudice to its other remedies under the contract, deduct liquidated damages a sum equivalent to 2.0% of the billed amount of final work executed for each week or part there of delay until the actual date of completion up to a maximum deduction of 20% of billed amount of final work executed. Once the maximum is reached to Company may consider termination of contract without any liabilities to Company.

In case the contractor has not mobilized / taking up the job as per the direction of Engineer In-charge, the company have all rights to cancel / re-allocate the work allotted to the contractor.

Engineer In charge should specifically mention the amount of LD levied on the bill of contractor for this job.

22.0 Statutory variation in Taxes and Duties

The total order value shall remain **FIRM** within stipulated delivery period and shall not be adjusted on account of any price increase/variations in commodities & raw materials. However Statutory Taxes, duties and Levies imposed by Competent Authorities by way of fresh notification(s) within the stipulated delivery period shall be borne by BRPL on submission of necessary documents claiming such variation. The variation will be applicable only on such value wherever price breakup of same is submitted by vendor/available in PO/WO.

23.0 Force Majeure

23.01 General

An "Event of Force Majeure" shall mean any event or circumstance not within the reasonable control directly or indirectly, of the Party affected, but only if and to the extent that:

(i) Such event or circumstance materially and adversely affects the ability of the affected Party to perform its obligations under this Contract, and the affected Party has taken all reasonable precautions, due care and reasonable alternative measures in order to prevent or avoid the effect of such event on the affected party's ability to perform its obligations under this Contract and to mitigate the consequences thereof.

(ii) For the avoidance of doubt, if such event or circumstance would not have materially and adversely affected the performance of the affected party had such affected party followed good industry practice, such event or circumstance shall not constitute force majeure.

(iii) Such event is not the direct or indirect result of the failure of such Party to perform any of its obligations under this Contract.

(iv) Such Party has given the other Party prompt notice describing such events, the effect thereof and the actions being taken in order to comply with above clause.

23.02 Specific Events of Force Majeure subject to the provisions of above clause, Events of Force Majeure shall include only the following to the extent that they or their consequences satisfy the above requirements:

(i) The following events and circumstances:

a) Effect of any natural element or other acts of God, including but not limited to storm, flood, earthquake, lightning, cyclone, landslides or other natural disasters.

b) Explosions or fires.

(ii) War declared by the Government of India, provided that the ports at Mumbai are declared as a war zone.

(iii) Dangers of navigation, perils of the sea.

23.03 Notice of Events of Force Majeure If a force majeure event prevents a party from performing any obligations under the Contract in part or in full that party shall:

i) Immediately notify the other party in writing of the force majeure events within 7(seven) working days of the occurrence of the force majeure event

ii) Be entitled to suspend performance of the obligation under the Contract which is affected by force majeure event for the duration of the force majeure event.

iii) Use all reasonable efforts to resume full performance of the obligation as soon as practicable

iv) Keep the other party informed of all such efforts to resume full performance of the obligation on a regular basis.

v) Provide prompt notice of the resumption of full performance or obligation to the other party.

23.04 Mitigation of Events of Force Majeure Each Party shall:

(i) Make all reasonable efforts to prevent and reduce to a minimum and mitigate the effect of any delay occasioned by an Event of Force Majeure including recourse to alternate methods of satisfying its obligations under the Contract;

(ii) Use its best efforts to ensure resumption of normal performance after the termination of any Event of Force Majeure and shall perform its obligations to the maximum extent practicable as agreed between the Parties; and

(iii) Keep the other Party informed at regular intervals of the circumstances concerning the event of Force Majeure, with best estimates as to its likely continuation and what measures or contingency planning it is taking to mitigate and or terminate the Event of Force Majeure.

23.05 Burden of Proof In the event that the Parties are unable in good faith to agree that a Force Majeure event has occurred to an affected party, the parties shall resolve their dispute in accordance with the provisions of this Agreement. The burden of proof as to whether or not a force Majeure event has occurred shall be upon the party claiming that the force majeure event has occurred and that it is the affected party.

23.06 Termination for Certain Events of Force Majeure. If any obligation of any Party under the Agreement is or is reasonably expected to be delayed or prevented by a Force Majeure event for a continuous period of more than 1 (one) month during the Term of the Agreement, the Agreement shall be terminated at the discretion of the Company and neither Party shall be liable to the other for any consequences arising on account of such termination.

The Company reserves the right to demand the Contractor's services on holidays as well as beyond the normal working hours.

The Contractor will ensure that none of their person is engaged in any unlawful activities subversive of the Company's interest failing which suitable action may be taken against the Contractor as per the terms and condition of this order.

The Contractor shall be liable for payment of all taxes and duties as applicable, to the State/ Central Govt. or any local authority.

The Contractor's employees shall not be treated as Company's employees / persons for any purpose whatsoever & facilities/ benefits applicable to the Company's employees shall not be applicable to Contractor's employees. If due to any reasons whatsoever the Company is made liable to meet any obligation under any of the laws & enactment etc, for any reason whatsoever the same shall be recovered from the Contractor either from the present and future amount payable to him or as per law.

24.0 Transfer and Sub-Letting

The Contractor shall not, without company's prior consent in writing assign or sublet or transfer any portion of services awarded to the Contractor as envisaged herein and falling under this contract. Moreover, any such consent shall not relieve the Contractor from any obligation, responsibility, or duty under this Contract.

25.0 Recoveries

When ever under this contract any money is recoverable from and payable by the bidder, the purchaser shall be entitled to recover such sum by appropriating in part or in whole by detecting any sum due to which any time thereafter may become due from the supplier in this or any other contract. Should the sum be not sufficient to cover the full amount recoverable the bidder shall pay to the purchaser on demand the remaining balance.

26.0 Waiver

No delay or forbearance by company in exercising any right or power under this Agreement shall be construed as a waiver of such right or power, nor shall any single or partial exercise of such right or power preclude any further exercise of such right of power.

27.0 Indemnification

Notwithstanding contrary to anything contained in this RFQ, Supplier shall at his costs and risks make good any loss or damage to the property of the Purchaser and/or the other Supplier engaged by the Purchaser and/or the employees of the Purchaser and/or employees of the other Supplier engaged by the Purchaser whatsoever arising out of the negligence of the Supplier while performing the obligations under this contract.

28.0 Documentation

The Bidder's shall procure all equipment from BRPL approved sources as per attached specifications. The Bidder's shall submit 5 copies of Material/Type Test Certificates, O&M Manuals, and Approved & As-built drawings. The Bidder's shall ensure for the strict compliance to the specifications and Field Quality Procedures issued by BRPL Engineer in-charge.

29.0 Commissioning Spares

Commissioning Spares shall be deemed to be included in the quoted prices

30.0 Limitation on Liability

30.1 The Contractor's liability (except Third Party Liability; covered under the agreement and addendums thereto) for all damages, losses, acts or omissions, howsoever occasioned, shall not, at any time exceed an amount equivalent to Contract Value.

30.2 Notwithstanding anything stated in the agreement, the limitation of Liability shall not be available/applicable in case of wilful default/breach/negligent act/misconduct on the part of the Contractor and/or its employees.

31.0 Consequential Damages

Notwithstanding anything to the contrary in the Purchase Order, except for breach of obligations under Non-disclosure and except as expressly provided in a Purchase Order, in no event, as a result of breach of contract or breach of warranty or otherwise, shall either Party hereto or either Party's Affiliates or sub Contractors, be liable under the Purchase Order to the other Party for any consequential, special, indirect, exemplary or incidental damages, and/or for any lost profits, goodwill or revenues of such Party, howsoever arising, before or after Acceptance of the Goods and whether or not such damages are foreseeable.

BSES Rajdhani Power Ltd.

SECTION – III (B):

SPECIAL CONDITIONS OF CONTRACT (SCC) B:

These Special Conditions of Contract (SCC) shall be read in conjunction with the Terms and Conditions of the Contract, General Conditions of Contract (GCC), Scope of Work and other documents forming part of the contract wherever the context so requires. Notwithstanding the subdivision of documents into separate sections and volumes, every part of each such document shall be deemed to be supplementary to and complementary of every other part.

1. DEFINITIONS

ENGINEER IN-CHARGE (EIC) / OFFICER-IN-CHARGE (OIC)

The term "Engineer-in-charge (EIC)/Officer-in-Charge (OIC)" shall mean the Company's nominated representative for the purpose of supervision of the execution of the Contract. The same shall be mentioned in the Contract.

2. SCOPE OF WORK- SERVICES

The scope includes material transportation, GPR Survey of Route, digging of trench, cable laying, Supply and Laying HDPE Pipes, cable cover, Backfilling levelling of trench, Covering of Malba, Dust mitigation Measures at Site, close Barricading, Removal of Surplus Malba, Fabrication and Erection of Steel Structure, Erection of 66kV monopoles , Deployment of all required cranes, tools & tackles, and safety equipment necessary for the monopole erection works , Dismantling of the existing D/C 66kV overhead line including Towers, Supply & Installation of LIU, OFC laying, Termination etc as per detailed scope of work as enumerated in Section – V. Vendor is responsible for taking the Permission (Liasoning work) from Road owning agencies & Delhi Police, statutory fees will be borne by BRPL.

3. EFFECTIVE DATE, TIME AND VALIDITY

3.1 The order/agreement shall become effective for all purposes from the date to be specified under the agreement and continue to remain in force for the period 6 Months.

3.2. You are required to mobilize your manpower within 7 days of receipt of PO & WO and commence the activity as per instructions of Engineer In-charge. The entire work should be completed within 6 Months from the date of issue of LOI/orders.

3.3 The detailed schedule and milestone completion dates would be as per the contract schedules given from time to time by Engineer In-charge at site. You shall submit a weekly progress report to Engineer In charge.

4. ORDER VALUE

Value of the Contract will be contracted out on the basis of finalized rates.

The Contractor shall not be entitled to adjustment in the Service Fees during the term of this Agreement for increase due to

(a) increased labour costs or costs related to vehicles or other Equipment's provided,

(b) changes in insurance premiums, and/or

(c) Changes in legislations or regulations relating to the Service.

(d) The cost of insurance during loading/unloading of materials/ equipments during its storage and handling/erection at site for installation is included in the contractor's scope and value will be included in the work order value. The unit rates are also inclusive of barricading charges and watch & ward charges during execution and no separate charges shall be paid for the same.

5. RATES & ESCALATION

a. The Rates/Agreement Consideration are firm and fixed for the Agreement period. The Rates shall not be subject to escalation or increases on any account/reason(s) whatsoever.

5.2 The rates set out above are also inclusive of reasonable incidental expenses incurred by Contractor on the following:

I. Cost of Labour, tackles and supervision.
II. All taxes and levies, including but not limited to GST, etc as applicable during the currency of the contract.
III. Mobile and Conveyance of the Contractor's employees up to place of work and/ or from one place to another place for carrying out the job.
IV. Uniform with all accessories for the team as per the sample decided.
V. Rates shall be valid for all heights and locations.
VI. All other expenses incidental to the job.
VII. The Company shall pay only once against the service provided irrespective of the fact that the Contractor might have to take more than one attempts for providing the service.
VIII. Compliance with all labour laws including Minimum Wage Act, Bonus Act,The Sexual Harassment of Women at Workplace (Prevention, Prohibition and Redressal) ACT, 2013etc in respect of employees engaged by the Contractor for the discharge of services as per this agreement.

6. CONTRACT CUM PERFORMANCE SECURITY BANK GUARANTEE (CPBG)

a. Contractor shall furnish the CPBG in the prescribed format within 15 days from the date of issue of LOI / Work Order for due performance of the provisions of Work Order/Agreement.

b. The contract Performance Bank Guarantee shall be given below table -1 and shall be valid till the completion of defect liability period plus three (3) months or latest RBI guidelines (if any) whichever is higher towards claim period, if not otherwise specified in agreement. This amount shall remain fixed during the currency of the agreement.

Table -1 (CPBG required for given below Scheme for Services)

Sr. No.	Scheme Details	CPBG Amount of Services in Rs.
1	Scheme No: ES26SH1003	25,77,078 /-

c. The CPBG shall be issued from any nationalized / scheduled bank as per company format.

d. The Company shall reserve the right to invoke the CPBG unconditionally and without recourse to the Contractor, if there is failure to perform any part of the Agreement for whatsoever reason. This clause is pertaining to performance of contractual obligations and the decision of Company shall be final in this regard.

e. In the event of any claim or any other outstanding Contractual obligations remaining unfulfilled, the Contractor shall be required to extend the CPBG till the settlement of all claims and completion of all Contractual obligations at the cost and consequences of contractor.

f. In the event, in Company's sole judgement, the Contractor has fulfilled all its obligations under this Agreement, The CPBG shall be released without any interest after the expiry of CPBG and its claim period as mentioned above.

g. If the CPBG is or becomes invalid for any reason (other than its expiry), the Contractor shall immediately notify the Company/BRPL and provide within five (5) days a replacement CPBG in the form set out in the Contract/Agreement.

h. Not later than sixty (60) Business Days before the expiry of the CPBG, the Contractor shall, upon request of the Company/BRPL obtain extension of the validity of such CPBG for the period stated in such request by the Company/BRPL and provide a copy of such renewed CPBG.

i. It is Contractor's responsibility to incur charges / cost to maintain and for extension of CPBG without claiming reimbursement from the company/BRPL.

7. PAYMENT TERMS

Payment shall be made to you as under:

7.1 80% payment shall be released on submission of bill and certification of work completion by Engineer-In-charge. The bill shall be paid within 30 days on receipt of such bills at our office.

7.2 10% against submission of Electrical Inspectorate's & QC clearance certificate.

7.3 Balance 10% shall be paid on testing and commissioning of entire scheme, work completion certificate issued by our Engineer In charge.

7.4 The contractor shall submit the invoice along with the checklist duly filled in Invoice shall be processed and payment shall be made to contractor on certification of Engineer-In Charge for compliance to check point's given in check list.

7.5.1 All monitoring, measurement, billing & payment processes shall be on IT enabled platform of BRPL as per Company's guidelines issued from time to time and bidders to ensure adherence.

7.6 Contractor shall upload bills along with all supporting documents in online BTS (Bill Tracking Systems) software or any other IT enabled platform of BRPL as per Company's guidelines issued from time to time for certification / approval purpose and bidders to ensure adherence. Further the contractor shall also submit original bill (hard copy) along with all supporting documents at Vendor Support Cell of BRPL. The bills shall be made in favor of BSES Rajdhani Power Ltd, BSES Bhawan, Nehru Place, New Delhi - 110019.

7.7 Company shall make payments, without any interest/charges and after deduction of taxes, penalties as applicable, against the bills within 30 days from the date of receipt of the bills, duly verified and certified by Engineer-in-Charge.

7.8 <<Deleted>>

7.9 The bill shall consist of the prescribed documents on standard stationary designed by the Company. Contractor shall collect the details of such documents and formats from the Company.

7.10 Contractor shall, at no point of time, claim or have the right to claim any additional fees, expenses or charges of any nature whatsoever, other than the Rates set out in the contract.

7.11 The company may modify the procedure for the submission of bills. The Contractor shall be obliged to submit its bill as per the procedure stipulated by the company from time to time.

8. PENALTY

8.1 Penalty: A penalty of 2.5% of bill amount shall be levied in each case of non-compliance of safety practices and site cleanliness.

8.2 Liquidated Damages: In the event of any delay in completion of the work beyond the stipulated time given by in order due to reasons solely attributable to the Contractor, the Contractor shall pay to the Company liquidated damages.

If the Contractor failed perform the services within the time period specified in the order, the Company shall, without prejudice to its other remedies under the contract, deduct liquidated damages a sum equivalent to 0.5% of the total order value for each week or part there of delay until the actual date of completion up to a maximum deduction of 10% of total order value. The levy payment or deduction of such damages shall not relieve the Bidder from his obligation to complete the Works on time or from any other part of his obligation and liabilities under the Contract. Once the maximum is reached, the Company reserves the right for termination of contract without any liabilities to the Company.

In the event of an extension of time being granted by the EIC, in writing for the Completion of the works, this clause shall be applicable after the expiry of such an extended period.

Engineer In charge should specifically mention the amount of LD levied on the bill of Bidder.

9. DERC GUIDELINES & REGULATIONS

The bidder shall make himself fully aware & familiarise with prevailing DERC guidelines / regulations.

10. INSURANCE POLICIES

The contractor shall take suitable insurance policy for its men and materials (Term Insurance for life, GPA, Mediclaim policy, Workmen Compensation Policy etc.) as listed below for the resources deployed by him

a) Term Insurance for life:

Before commencing the execution of the work, the CONTRACTOR shall take TERM INSURANCE POLICY for the staff engaged by them for this work to insure against any loss of life . The policy shall have coverage of Rs.10 Lakhs. The Contractor shall be responsible for on-the-spot same day claim settlement with the victim's legal heirs without waiting for settlement by insurance claim without any liability on BRPL.

b) Group Personal Accident Insurance:

Before commencing the execution of the work the Contractor shall take Accidental insurance policy for the staff engaged/deployed by him for the work under agreement, to insure against any loss of life which may occur during the agreement for the work of the Company. The policy shall have coverage of Rs. 5 Lakhs (Table C Death + Permanent Total Disability + Partial permanent Disability due to external accidents). Permanent total disability coverage shall be 125% of the basic sum assured of Rs 5 Lakhs.

The Contractor shall be responsible for on the spot same day claim settlement with the victim's legal heirs without waiting for settlement by insurance claim and without any liability on BRPL. The premium amount for both the above policies shall be borne by the Contractor. The Contractor shall furnish copy of policy within 15 days of start of work under the contract.

c) Medical Insurance Policy:

Contractor shall take a mediclaim policy including family floater of minimum sum assured value Rs. 2.00 lakhs for the resources who are not covered under ESI.

d) Comprehensive Marine Storage cum Erection insurance policy:

Company shall take at his own cost Comprehensive Marine Storage cum Erection insurance policy for the total work. However, Contractor shall take at his own cost third party insurance and other suitable insurance policy for his own men and materials. Please note that these insurance policies shall be taken in consultation with the company and a copy of the such insurance policies shall have to be furnished to company within 15 days of the date of LOI/Order.

e) For all the insurance policies (whether taken by the Company or Contractor), the Contractor shall be responsible for settlement of claims with the underwriters without any liability on the company and will arrange replacements / rectification expeditiously without a waiting settlement of insurance claim, at contractor's own cost and this shall not entitle the Contractor for any extension of time.

11. WARRANTY / DEFECT LIABILITY PERIOD

The Contractor shall be liable to rectify all defects in the materials or works done by the Contractor under this Contract, or from any act or omission of the contractors for a period of Twelve (12) months from date of final work completion certification by the Engineer in-charge.

If any defect noticed and system cannot be used by reason of any defect, the defect liability period shall be extended by the period equal to the period during which the system is not in operation.

In respect of any warranty work performed by the Contractor, the period during which a claim may be made for such warranty work shall be extended by an additional period of twelve (12) months from the completion of such portion of warranty work.

12. QUALITY:

Contractor shall ensure that strict quality is maintained in the Performa and execution of works under this Work Order and Works are executed in conformity with the Specification.

All tools, tackles, instruments and other equipments used in the execution of the Works shall be duly calibrated as required and Contractor shall maintain proper records of such tools, tackles, instruments and / or equipment.

Contractor shall prepare the quality plan as per the specifications and shall strictly monitor compliance with the approved quality plan during the entire period of this Work Order.

Contractor shall submit duly approved Quality Check sheets along with final bill and the same shall be integral part of final Quality Clearance. QA Check sheets format attached with this contract as Annexure-A for the following:

QA - CHECKSHEET FOR 11KV RMU

QA - CHECKSHEET FOR 11KV TERMINATION

QA - CHECKSHEET FOR DISTRIBUTION TRANSFORMER

QA - CHECKSHEET FOR FEEDER PILLAR

QA - CHECKSHEET FOR FENCING

QA - CHECKSHEET FOR HIGH MAST

QA - CHECKSHEET FOR HT OVERHEAD LINE 11KV

QA - CHECKSHEET FOR LT ACB

QA - CHECKSHEET FOR OH LT LINE

QA - CHECKSHEET FOR PKG SUB-STN

QA - CHECKSHEET FOR ROUTINE ELECTRICAL TESTS

QA - CHECKSHEET FOR STREET LIGHT

QA - CHECKSHEET FOR UNDERGROUND HT CABLE 11KV

QA - CHECKSHEET FOR UNDERGROUND LT CABLE

QA - CHECKSHEET FOR POWER TRANSFORMER (EHV)

13. WORK COMPLETION CERTIFICATION, HANDING OVER AND MATERIAL RECONCILIATION:

The work carried out by the Contractor under this order has to be certified by Engineer In-charge for satisfactory completion of work allotted to the contractor with respect to specifications / Field Quality Procedures as per applicable standards. In case of modification/correction to be carried out, contractor shall carry out the said modifications/correction without additional cost. The Contractor shall remain in close contact with Engineer In-Charge at site to report the general findings of the fieldwork during the initial as well as later stage of the work at site.The contractor shall be solely responsible for any shortage or damage of materials issued to them handling of and / or in storage and erection at site and cost of the same will be recovered from the contractor as certified by Engineer In-Charge. Contractor must submit a material reconciliation statement in the approval format with Bill raise by him. The contractor shall maintain an accurate and exhaustive record detailing out the list of all items received by him for the purpose of erection and keep such

record open for the inspection of the company.

14. COMPLETION PERIOD:

You are required to mobilize your manpower within 7 days of receipt of WO and commence the activity as per instructions of Engineer In-charge. The entire work should be completed within 6 Months from the date of issue of LOI/order.

The detailed schedule and milestone completion dates would be as per the contract schedules given from time to time by Engineer In-charge at site. Formal road cutting clearance from MCD is made available to you. You shall submit a weekly progress report to Engineer In charge.

15. GUIDELINES REGARDING INSPECTION & MAINTENANCE OF PITS /DUG AREA WHILE DOING WORK AT SITE IN BRPL AREA

The contractor shall ensure strict compliance of the following directions:

a) The sites of all manholes, pits, holes, tanks or any other opening in the ground of any kinds shall be regularly inspected and maintained.

b) Schedule and protocols of inspections and maintenance shall be drawn up and notified to BRPL.

c) These sites shall be cordoned off (Close Barricades) to render them inaccessible to the public.

d) The existence of these sites shall be clearly & visibly marked by the display of signboards/signages.

e) If they are required to be covered, it shall be ensured that the covers are in place.

f) If required, as per law, prior permission from authorities shall be secured before the commencement of work. The Execution contractor shall solely be responsible for all the preventive and protective environmental steps as per guidelines. Any violations from the above guidelines have been viewed very seriously by the authorities. Contractor is liable for the penalties / other action by the authorities, the contractor shall indemnify BRPL its employees/directors/associates from all liabilities/penalties/claims including litigation expenses on this account.

BSES

BSES

SECTION – IV : GENERAL CONDITIONS OF CONTRACT (GCC)

SECTION – IV

GENERAL CONDITIONS OF CONTRACT (GCC)

This GCC shall form an integral part of the Agreement and will be of full force and effect as if they were expressly set out in the body of the Agreement.

Reference to any legislation or law to any provision thereof shall include references to any such law as it may, after the date hereof, from time to time, amended, supplemented or re-enacted, and any reference to a statutory provision, shall include any subordinate legislation made from time to time under that provision.

1. DEFINITION & INTERPRETATION

1.1 Definition

In the Agreement (as defined below) the words and expressions defined below shall have the meanings assigned to them herein except where the context requires otherwise:

1.1.1 "Accounting Year" means the financial year commencing from 1 April of any calendar year and ending on 31 March of the next calendar year.

1.1.2 "Applicable Laws" means all Law / Laws in force and effect, as of the date hereof and which may be promulgated or brought into force and effect hereinafter in India including any revisions, amendments or re-enactments including without limitation regulations, rules and notifications made there under and judgments, decrees, injunctions, writs and orders of any court or regulators or quasi-judicial body or any appropriate authorities, as may be in force and effect during the subsistence of the Contract. It includes Law/Laws of Country/State legislation, statues, ordinance, notification, circular, regulations and other Laws, and bye Laws of any legally constituted public authority.

1.1.3 "Change in Law" means the occurrence of any of the following after the execution of agreement:

(i) The enactment of any new Indian Law;

(ii) The repeal, modification or re-enactment of any existing Indian Law;

(iii) The commencement of any Indian Law which has not entered into effect until the date of performance the Contract;

(iv) Change in the interpretation or application of any Indian Law by a court as compared to such interpretation or application twenty-eight (28) days prior to the last date of submission of Tender;

(v) It also includes changes in the tax rates upward or downward.

1.1.4 "Change in Service" means any addition to, deletion from, suspension of or other modification, to the Services, or to the quality, function or as delineated in this agreement, including any such addition, deletion, suspension or other modification, which requires a change in one or more of the service specification and the completion schedule.

1.1.5 "Communication" means instruction or information or written notice issued on letter head or through electronic mail exchange between Parties and excludes verbal or short messaging services (SMS). The notice shall be served by delivering a copy by electronic mail, or registered post/speed post etc. Unless otherwise stated in the agreement, all communications to be given under the Contract shall be in writing. Communication may be sent to competent authority or authority delegated to such officer/employee. Communication shall be on letter head of Party signed by competent authority/authorized signatory of the Party.

1.1.6 **"Company**/Owner/Purchaser/First Party " the terms used in this agreement shall refer to BSES RAJDHANI Power Limited (BRPL) having its office at BSES Bhawan, Nehru Place, New Delhi - 110019 and shall include its authorized representatives, agents, successors and assignees.

1.1.7 **"Contractor/**Agency/Vendor**"** means the successful bidder to whom this Agreement is awarded. It is entity named in the Execution Cover and includes assignees, administrator, executors, successors, associated company/subsidiary/joint venture/firm/representative of the Contractor. It is also termed as 'Contractor' or 'Agency'.

1.1.8 Contract" /" Agreement/"Work Order" means the agreement between the Company and the Contractor for the performance of the Services, including the Contract / Agreement/ Work Order

duly signed and executed between the Parties, the letter of acceptance, the Conditions of Contract, the schedules, Annexure, the Company/BRPL's requirements, including but not limited to the tender, other tender documents and such further documents which are listed in the Contract / Agreement/Work Order and includes any amendment thereto made in accordance with the provisions hereof giving binding effect to the terms and conditions agreed by the Parties. This includes Work Order / Letter of Intent (LOI) issued to the Contractor by the Company/BRPL.

1.1.9 "Agreement Period" shall mean duration of Services to be performed and includes extension thereof after mutual consent of both Parties.

1.1.10 "Agreement Value/Consideration" means the price of the defined Services including taxes payable to the Contractor for the performance of the Services subject to such additions thereto and deductions there from as may be made under the provisions of this Agreement. The Agreement Value is in consideration of providing the Service by the Contractor as per scope of work and as per Service specifications stipulated in the Agreement; the Agreement Value includes all and any fees, charges, local cess, taxes (GST and Income Tax), levies together with all cost and expenses. The Agreement Value may also term as 'Service Fee(s)' or 'Agreement fees'/Consideration elsewhere in the Agreement. Agreement Value is fixed lump sum for the Agreement Period unless mentioned in Agreement elsewhere.

1.1.11 "Force Majeure" shall have the meaning as ascribed in this agreement and annexure thereto.

1.1.12 "Good Industry Practice" means the exercise of the highest degree of skill, diligence, prudence and foresight in compliance with the obligations under the Contract which would be expected from a skilled and experienced Contractor engaged, being internationally accepted and customized in day to day performance in industry including for the supply of Manpower.

1.1.13 "HSE Conditions" shall mean the BRPL's health, safety and environment conditions containing the requirements and conditions to be met with respect to safety, health and environment.

1.1.14 "KPI" shall mean Key Performance Indicator as set out in the Contract/Agreement, its schedules/annexures etc. The performance of the Manpower employed by the Contractor for execution of Services shall be measured through KPI. The payment to Contractor shall be based on Manpower's performance as measured through KPI. It includes metrics in numerical, frequency and measuring process. Total manpower shall be monitored & calculated skill wise but it will be cumulative on monthly basis

1.1.15 "Manpower" means a person/s, labour (including Contractor's staff / personnel) known, introduced, security personnel employed and deployed by the Contractor in Contractor's provision of the Services who has skill, efficiency and mannerism to execute, perform Services under this Contract as per Scope Of Work of the Contract. The Manpower deployed shall have valid licenses, PAN card details / KYC information.

1.1.16 "Contract cum Performance Bank Guarantee (CPBG)" means the bank guarantee to be procured in accordance with terms of agreement for the performance of the Contractor's obligations under the Contract. The CPBG format is furnished in the Annexure, annexed to agreement.

1.1.17 "Service(s)" / "Works" shall mean Company/BRPL's requirements describing in detail including the nature of the Services and activities to be performed by the Contractor and its Manpower, in accordance with specifications, the duration of such requirement, and Services performed, the expected time of commencement and completion, detailed responsibilities and other relevant particulars. It is 'scope of work' which is to be executed, performed successfully and satisfactorily by the Contractor in accordance with the Contract and ancillary services as may be Communicated by the BRPL from time to time under the Contract Period.

1.1.18 "Site" means the designated place/office or establishment or construction site, office, branch, including right of way and/or places provided by the BRPL where the Services is to be executed and any other place as may be specifically designated in the Contract/Agreement as forming part of the Site or designated as such by the Company/BRPL.

1.1.19 "Sub-Contractor" means a Sub-Contractor whom a part of the Contract is Sub Contracted by the Contractor with the prior written approval of the Company/BRPL, and the permitted legal successors in title to such person, but not any assignee of such person.

1.1.20 "Sub-Contract" shall mean obligations under the Contract have been awarded by the Contractor to Sub-Contractor.

PROOF

1.1.21 "Tax Invoice" /" Running Bill" (RA Bill/bill) shall have the meaning ascribed to it under GST Laws.

1.2 Interpretation

In the Contract except where the context requires otherwise:

1.2.1 Words indicating one gender include all genders

1.2.2 "Written" or "in writing" means hand-written, written, or electronically made and resulting in a permanent record

1.2.3 Any reference to any provision of an act of Parliament or of a state legislature shall be construed, at the particular time, as including a reference to any modification, extension or re-enactment thereof, to all instruments, orders or regulations then in force

1.2.4 The singular shall include plural and vice versa, and words denoting natural persons shall include partnerships, firms, companies, corporations, joint ventures, trusts, associations, organizations or other entities

1.2.5 The headings are inserted for convenience and shall not limit, alter or affect the meaning of the Contract.

1.2.6 The terms defined in schedule and the BRPL's Requirements shall have the same meaning ascribed thereto when used elsewhere in the Contract and vice versa;

1.2.7 The words "include" and "including" shall be construed without limitation

1.2.8 The schedules/annexures shall form an integral part of the Conditions of Contract and shall be in full force and effect as though they were expressly set out in the body of the Conditions of Contract.

1.2.9 The word "consent" wherever used, shall mean prior written consent;

1.2.10 In the event any portion or all of the Contract is held to be void or unenforceable, the Parties agree to negotiate in good faith to arrive at an amicable understanding which shall accomplish the intent of the Parties as originally set forth in the Contract;

1.2.11 No failure on the part of any Party to exercise, and no delay in exercising, any right hereunder shall operate as a waiver thereof, and no single or partial exercise of any such right shall preclude any other or further exercise thereof or the exercise of any other right

1.2.12 References to recitals, Articles or schedules in the Contract shall, except where the context otherwise requires, be deemed to be references to recitals, Articles and schedules of or to the Contract; and

1.2.13 In case the day on or by which any thing is to be done is not a Business Day, that thing must be done on or by the immediately occurring next Business Day

2. PRIORITY OF CONTRACT DOCUMENTS

The several documents forming the Agreement are to be taken as mutually explanatory of one another, but in case of ambiguities or discrepancies, the same shall be explained and adjusted by the company, who shall, accordingly, issue suitable instructions thereon to the Contractor. In such event, unless otherwise provided in the agreement or explained by way of instructions by the company, as mentioned above, the priority of the documents forming the Agreement shall be as follows:

i) Contract Agreement/Work Order.
   (a)Special Conditions of Contract
   (b)General Conditions of Contract
(ii) The Letter of Acceptance/ Intent
(iii) Agreed Minutes of the Tender Negotiation Meetings
(iv) Agreed Minutes of the Tender Technical Meetings
(v) The Priced Bill of Quantities
(vi) The Technical Specifications / Scope of work
(vii) The Tender document, including all Appendices and/or Addenda, Corrigendum the latest taking precedence.

In the event of any conflict between the above-mentioned documents, the more stringent requirement or conditions which shall be favorable to the company shall govern and the decision

of company/BRPL shall be final and binding upon the parties.

3. AMENDMENT

Any modification, amendment or other change to the Agreement shall be affected only by a written instrument signed by the authorized representatives of both, the Company and the Contractor.

4. LANGUAGE AND MEASUREMENT

All correspondence and documents relating to this order placed on the Contractor shall be written in English language. Metric System shall be followed for all dimension, units etc.

5. EXAMINATION OF SITE & LOCAL CONDITIONS

The contractor is deemed to have visited all the sites that comes under Company's licensed area under the Contract and therefore, ascertained all site conditions and information pertaining to the services to be provided under this contract. The company shall not accept any claim whatsoever arising out of the difficulties at site/terrain/local conditions, if any.

6. TAXES & DUTIES

(i) Prices shall be inclusive of all taxes and duties including labour cess (except GST). However, Income Tax(TDS) as per applicable rate in accordance with Income Tax Act will be deducted from contractor's bills.

(ii) GST at actual shall be paid extra on submission of GST Registration and self-declaration on Contractor's letter head stating that you have deposited/or will deposit the Tax as per the applicable GST laws. Contractor shall furnish its GST registration number.

(iii) Any statutory variations i.e. increase/decrease in Taxes / Duties introduced by central Govt. / State Govt. shall be reimbursed/recovered to/from Contractor against documentary evidence and proof.

(iv) As Per Notification No. 39/2021 # Central Tax dated 21st December, 2021 w.e.f. 01/01/2022 registered person (ie, Recipient/Purchaser) can avail tax credit on those invoices only which have been reflected in GSTR 2A or GSTR2B (it means 100% matching of invoice is required). Also, GST has to be deposited by Supplier/Contractor by filing of GSTR- 1 and GSTR-3B.

(v) In view of above, if the same is not complied with by the supplier/Contractor and the Recipient/Purchaser is not in position to avail / utilize Input Tax Credit due to non-compliance or non-filing of GSTR-1 and GSTR-3B for the month/quarter (as applicable) in which the supply was made, then Recipient/Purchaser has right to hold 100% GST amount from next payment due of the subsequent month till the time default is not cured.

(vi) For releasing of the payment kept on hold on account of non-compliance of GST Act, supplier/Contractor shall submit payment proof i.e GST Portal screenshot reflecting name of Recipient/Purchaser along with GSTR-1 and GSTR-3B for month/quarter (as applicable) in which the same has been discharged. Payment shall not be released, till the time necessary proof showing the discharge of GST liabilities by the contractors for the period in default are submitted to the Company.

(vii) Further, the recipient/purchaser shall also be entitled to recover any financial loss suffered by the Company (including tax, interest, penalty and lapse of input credit) due to non-compliance or non-filing of GSTR-1 and GSTR-3B by the supplier/Contractor.

(viii) In case where delivery of goods is being made on FOR site basis, the Supplier/Contractor is responsible to comply with rules applicable for E-way bill. Any violation in provision of E-way Bill will attract penalty and seizure of Transit Material. Any Penalty and Pre-Deposit due to violation of rules/provision shall be paid and borne by Supplier/Contractor. Also, Supplier/Contractor is responsible to get the goods released from the concerned authority. Delay in supply due to seizure of goods shall attract liquidated damages as per Order / Agreement provisions.

7. PAYMENT

7.01 All monitoring, measurement, billing & payment processes shall be on IT enabled platform of BRPL as per Company's guidelines issued from time to time and bidders to ensure adherence.

Contractor shall upload bills along with all supporting documents in online BTS (Bill Tracking Systems) software or any other IT enabled platform of BRPL as per Company's guidelines issued from time to time for certification / approval purpose and bidders to ensure adherence. Further the contractor shall also submit original bill (hard copy) along with all supporting documents at Vendor Support Cell of BRPL. The bills shall be made in favor of BSES Rajdhani Power Ltd, BSES Bhawan, Nehru Place, New Delhi - 110019.

7.2 Company shall make payments, without any interest/charges and after deduction of taxes, penalties as applicable, against the bills within 30 days from the date of receipt of the bills, duly verified and certified by Engineer-in-Charge.

7.3 <<Deleted>>

7.4 The bill shall consist of the prescribed documents on standard stationary designed by the Company. Contractor shall collect the details of such documents and formats from the Company.

7.5 Contractor shall, at no point of time, claim or have the right to claim any additional fees, expenses or charges of any nature whatsoever, other than the Rates set out in the contract.

7.6 The company may modify the procedure for the submission of bills. The Contractor shall be obliged to submit its bill as per the procedure stipulated by the company from time to time.

8. TAX INVOICE SUBMISSION PROCEDURE AND CERTIFICATION

8.1 Tax Invoice shall be submitted to the Company for certification. Contractor must pay due attention for submission of Tax Invoice in time and along with relevant Documents to Company.

8.2.1 Tax Invoice shall be certified by Company after verifying relevant original Documents submitted by Contractor. If original Document associated with Tax Invoice is misplaced or lost during transit or for any genuine reason(s) attributable to Contractor, the reason(s) should be informed to Company in writing in stipulated period as instructed by Company. A true copy of certified Document with an indemnity bond or Bank Guarantee, as the case may be, must be submitted in the format provided by the Company.

8.2 Incomplete Tax Invoice will not be considered for processing of payments in terms of the Contract. Company reserves right to recover payable amount or part of Tax Invoice from available financial security or other dues of the contractor with the Company. Contractor shall be paid in terms of the Contract based on certification of Tax Invoice along with associated relevant Document(s) by the Company only.

9. TIME ESSENCE OF CONTRACT

Time is the essence of the contract and the contractor shall be responsible for performance of his works in accordance with the specified schedule. If at any time, the contractor is falling behind the schedule for reasons attributable to him, he shall take necessary action to make good for such delays by increasing his work force or by working overtime or otherwise to accelerate the progress of the work and to comply with schedule timelines and shall communicate such actions in writing to the company, to the satisfaction of the Company that his action will compensate for the delays. The contractor shall not be allowed any extra compensation for such actions.

Time shall be the essence of the Contractor. Contractor shall complete his work in accordance with the specified time-lines/ Schedules as per the terms of the contract or as may be instructed by the Company from time to time.

10. NOT USED

11. INSPECTION & QUALITY CONTROL

Inspection shall be performed by BRPL or its appointed authorized inspection agency. The contractor at his sole expenses shall correct defective works. Such rectification needs to be done / completed within the timelines specified by BRPL.

12. REPORTS AND INFORMATION

The Contractor shall be obliged to submit or furnish to Company, all or any information as desired by company, in the form of a report or otherwise. The report may be required at regular interval as specified/required by company. The information shall be provided in a format to be specified by the company to the Contractor. However, company, reserves the right to revise this format which would be communicated to the Contractor and it shall be valid and binding obligation on the Contractor to submit the desired information in the revised format.

13. STATUTORY OBLIGATIONS

The Contractor shall ensure the due compliance of all the applicable statutory acts, including but not limited to the following acts, where special attention of the Contractor is required to be drawn towards the compliance of provision (along with the latest amendments/additions) including any statutory approval required from the Central/State Governments, Ministry of Labour.

- The Child Labour (Prohibition and Regulation) Act, 1986.
- The Agreement Labour (Regulation and Abolition) Act, 1970.
- The Employee's Pension Scheme, 1995.
- The Employee's Provident Funds and miscellaneous provisions Act, 1952.
- The Employees State Insurance Act, 1948.
- The Industrial Disputes Act, 1947.
- The Maternity Benefit Act 1961.
- The Minimum Wages Act, 1948.
- The Payment of Bonus Act, 1965.
- The Payment of Gratuity Act, 1972.
- The payment of Wages Act, 1936.
- The Delhi Shops & Establishment Act, 1954.
- The Workmen's Compensation Act. 1923.
- The Company's Liability Act, 1938.
- The Sexual Harassment of Women at Workplace (Prevention, Prohibition and Redressal) Act, 2013
- The Delhi Preservation of Trees Act 1994

Further the Contractor shall be liable to comply with all the amendment in existing acts / upcoming new comprehensive labour acts/codes related to applicable labour laws.

The Contractor shall, prior to commencement of the jobs under this agreement, furnish to the Company the Registration No and Codes of permanent Provident Fund and ESI of its employees.

Contractor shall bear the entire responsibility, liability and risk relating to coverage of its workforce under different statutory regulations including Workmen's Compensation Act, ESI Act, Factories Act 1948, the Agreement Labour (Regulation and Abolition) Act 1970, as amended from time to time, and any other relevant laws/regulations as the case may be. Contractor shall also be solely responsible for the payment of all benefits such as Provident Fund, Bonus, Retrenchment Compensation, leave etc. applicable as per the various statutory laws/regulations and shall keep the Company indemnified in this regard against any claim. The Company shall be entitled to deduct from any money due to or become due to Contractor, any money paid or payable by way of compensation as aforesaid or cost or expenses in connection with any claims thereto and Contractor shall abide by the decision of the Company as regards the sum payable by

Contractor under the provisions of this clause

The Contractor shall obtain all registration/permissions licenses etc., which are/may be required under any labour or other legislations for providing the services under this Agreement.

In case it is desired by any Labour authorities to produce the records with respect to salary/ PF/ESI/EDIL/Bonus etc., the said record/register will be made available by the Contractor.

The contractor shall follow all law of the land and prevailing orders issued by various Govt. Departments like Dept. of Power / DERC/ NGT/Dept. of Forest/ Dept. of Environment / DPCB / CPCB/ Court orders etc.

14. REPRESENTATION, WARRANTIES AND GUARANTEES

The Contractor hereby represents warrants and guarantees that:

14.1 It is a legally recognized entity under the laws of India;

14.2 The Agreement contains valid and binding obligations and is enforceable in accordance with the terms hereof;

14.3 It has studied the technical feasibility, Site conditions and other prevailing conditions and all other operational details and based on these studies carried out, has agreed to provide to the Company the services as contemplated in this Agreement;

14.4 It has appraised itself of all applicable rules and regulations, and shall at all times comply with such rules and regulations;

14.5 It shall procure vehicles and hire manpower suitable for the purposes of rendering services as contemplated in this agreement;

14.6 The Services would be conducted in a safe and efficient manner at the Site and at all times in compliance with Good Industry Practices and requirements of the Company, and in any event, in accordance to this Work Order/agreement;

14.7 It shall procure all consents, licenses, permits, approvals and certificates and authorizations as may be required from any governmental authority for the performance of services at the Site;

14.8 It shall duly pay the duties, taxes and levies as are set out in this agreement or otherwise, which are to be paid by the Contractor;

14.9 There is no action, suit or proceeding, at law or in equity, or to the best of knowledge of Contractor, any official investigation before or by any governmental authority, arbitration tribunal or other body pending or, to the best of its knowledge, threatened against or affecting it or any of its property, rights or assets, which could reasonably be expected to have material adverse effect on its ability to perform its obligations under this Agreement or on the validity or enforceability of this agreement.

15. EVENTS OF DEFAULTS

Company may, without prejudice to any of its other rights or remedies under the Contract or in law, terminate the whole or any part of this Contract by giving written notice to the Contractor, if in the opinion of Company, contractor has neglected to proceed with the Contracts with due diligence or commits a breach of any of the provisions of this Contract including but not limited to any of the following cases:

15.1 Failing to complete execution of Contract as per the terms and conditions specified in the Contract.

15.2 Failing to complete Contracts in accordance with the approved schedule of Contract.

15.3 Failing to comply with any reasonable instructions or orders issued by Company in connection with the Contract.

15.4 Failing to comply with any of the terms or conditions of this Contract.

15.5 In the event Company terminates this Contract, in whole or in part, on the occurrence of any event of default, Company reserves the right to engage any other vendor or agency to complete the Contract or any part thereof, and in addition to any other right Company may have under the Contract or in law including without limitation, including the right to penalize for delay under clause "Liquidated Damage" of this Contract , the contractor shall be liable to Company for any additional costs that may be suffered/borne by Company for the execution of the Contract.

15.6 Failure on the part of the Contractor to maintain its confidentiality obligations and or compromising its integrity, which are required to be of highest standards, in so far as the present scope of work is concerned.

16. RISK & COST

If the Contractor fails to execute the work as per specification/Agreement/as per the direction of Engineer-in-change within the scheduled period and/or even after the extended period, the company shall be having the right to cancel/terminate the agreement and the company reserves the right to get the work executed from any other source at the Risk & Cost of the Contractor. The Extra Expenditure so incurred shall be debited to/recovered from the Contractor.

17. LIMITATION OF LIABILITY

17.1 The Contractor's liability (except Third Party Liability; covered under the agreement and addendums thereto) for all damages, losses, acts or omissions, howsoever occasioned, shall not, at any time exceed an amount equivalent to Contract Value.

17.2 Notwithstanding anything stated in the agreement, the limitation of Liability shall not be available/applicable in case of wilful default/breach/negligent act/misconduct on the part of the Contractor and/or its employees.

18. TERMINATION

18.1 TERMINATION BY COMPANY FOR NON PERFORMANCE

During the course of the execution, if at any time the Company observe and forms an opinion that the work under the order is not being performed satisfactory and the performance of the Contractor not found satisfactory, the Company reserves its right to cancel/ terminate this Agreement giving 30 days' notice without assigning any reason and the Company will recover all damages including losses occurred due to loss of time from the Contractor. After termination of the agreement, the Contractor shall immediately stop all activities related to the work terminated. This is without prejudice to other rights under the terms of contract. The Contractor shall hand over the Company all drawing/documents prepared for this contract up to the date of cancellation of order.

18.2 PREMATURE TERMINATION

The order can be terminated by the Company before the expiry of its term under the following conditions:

(i) The Contractor repudiates this order or otherwise evidences intention not to be bound by this order;
(ii) The Contractor assigns, mortgages, or charges or purports to assign, mortgage, or charge any of its obligations or rights in contravention to the provisions of this order; or, transfers or negates any of its obligations in contravention to the provisions of this order.
(iii) The Contractor breaches the Secrecy/Non-disclosure Clause/Confidentiality obligations.

(iv) If at any stage during the tenure of the work order, Contractor is found to be involved or indulging or even attempting illegal, unlawful action or activities or some fraudulent or even trying to take or ask bribe from any customer or to give bribe official/staff or misuse or abuse any meter or property of the Company.

(v) The Company shall be entitled to deduct from any money due or to becomes due to the Contractor, money paid or payable by way of compensation as aforesaid or cost or expenses in connection with any claims thereto. The Contractor shall abide by the decision of the Company as to the amount payable by the Contractor under the provision of this clause.

18.3 TERMINATION BY COMPANY FOR CONVENIENCE

The Company shall, in addition to any other right enabling it to terminate the Contract, have the right to terminate the Contract at any time without assigning any reason, by giving a written notice of minimum 30 days to the Contractor. The Contract shall stand terminated on the date as per the notice but such termination shall be without prejudice to the rights of the Parties accrued on and before the date of termination.

19. GOVERNING LAW AND ARBITRATION

19.1 Governing Law: This Work Order/Agreement shall be governed by the laws of India and each party submits to the exclusive jurisdiction of the courts in New Delhi.

19.2 Dispute Resolution Mechanism. All disputes and differences arising out of or in connection with this Agreement shall be resolved amicably by mutual discussion within 30 days. If the dispute cannot be resolved by mutual discussions and agreement, the parties will take such dispute to an arbitral panel comprising Sole Arbitrator jointly appointed by the parties to agreement.

19.3 In the event parties fail to appoint the sole arbitrator within 30 days from the date of request made by party, the Sole Arbitrator shall be appointed as per the provisions of The Arbitration and Conciliation Act 1996 as amended upto date. The arbitration shall be conducted in New Delhi in accordance with the provisions of the Arbitration and Conciliation Act 1996. The award of the arbitral panel shall be final and binding on all parties. The arbitration proceedings shall be conducted in English. The venue and seat of Arbitration shall be in Delhi Only. The cost of arbitration shall be shared equally between the parties unless otherwise directed by the Arbitrator.

20. FORCE MAJEURE

20.1 General

An "Event of Force Majeure" shall mean any event or circumstance not within the reasonable control, of the Party affected, but only if and to the extent that:

(i) Such event or circumstance, despite the exercise of reasonable diligence, could not have been prevented, avoided or reasonably foreseen by such Party;

(ii) Such event or circumstance materially and adversely affects the ability of the affected Party to perform its obligations under this agreement, and the affected Party has taken all reasonable precautions, due care and reasonable alternative measures in order to prevent or avoid the effect of such event on the affected party's ability to perform its obligations under this Agreement and to mitigate the consequences thereof. For the avoidance of doubt, if such event or circumstance would not have materially and adversely affected the performance of the affected party had such affected party followed good industry practice, such event or circumstance shall not constitute force majeure.

(iii) Such event is not the direct or indirect result of the failure of such Party to perform any of its obligations under this Agreement; and

(iv) Such Party has given the other Party prompt notice describing such events, the effect thereof

and the actions being taken in order to comply the relevant clause

20.2 Specific Events of Force Majeure

Subject to the provisions of the agreement, Events of Force Majeure shall include only the following to the extent that they or their consequences satisfy the above requirements:

(i) The following events and circumstances:

a. Effect of any natural element or other acts of God, including but not limited to storm, flood, earthquake, lightning, cyclone, landslides or other natural disasters, and\

b. Explosions or fires or flood

(ii) Public disorder, insurrection, rebellion, sabotage, riots or violent demonstrations of a local character;

(iii) Declaration of the Site as war zone.

(iv) Any order, regulation, directive, requirement from any Governmental, legislative, executive or judicial authority.

20.3 Notice of Events of Force Majeure

If a force majeure event prevents a party from performing any obligations under the Agreement in part or in full, that party shall:

(i) Immediately notify the other party in writing of the force majeure events within 2 working days of the occurrence of the force majeure event

(ii) Be entitled to suspend performance of the obligation under the Agreement which is affected by force majeure event for the duration of the force majeure event

(iii) Use all reasonable efforts to resume full performance of the obligation as soon as practicable

(iv) Keep the other party informed of all such efforts to resume full performance of the obligation on a regular basis

(v) Provide prompt notice of the resumption of full performance or obligation to the other party.

20.4 Mitigation of Events of Force Majeure

The Contractor shall:

(i) Make all reasonable efforts to prevent and reduce to a minimum and mitigate the effect of any delay occasioned by an Event of Force Majeure, including applying other ways in which to perform the agreement;

(ii) Use its best efforts to ensure resumption of normal performance after the termination of any Event of Force Majeure and shall perform its obligations to the maximum extent practicable as agreed between the Parties; and

(iii) Keep the Company informed at regular intervals of the circumstances concerning the event of Force Majeure, with best estimates as to its likely continuation and what measures or contingency planning it is taking to mitigate and or terminate the Event of Force Majeure.

20.5 Burden of Proof

In the event that the Parties are unable in good faith to agree that a Force Majeure event has occurred to an affected party, the parties shall resolve their dispute in accordance with the provisions of this agreement. The burden of proof as to whether or not a force majeure event has occurred shall be upon the party claiming that the force majeure event has occurred and that it is the affected party.

20.6 Termination for Certain Events of Force Majeure

If any obligation of any Party under the Agreement is or is reasonably expected to be delayed or prevented by a Force Majeure event for a continuous period of more than 1 (one) month during the Term of the Agreement, the Agreement shall be terminated at the discretion of the Company and neither Party shall be liable to the other for any consequences arising on account of such termination.

The Company reserves the right to demand the Contractor's services on holidays as well as beyond the normal working hours.

The Contractor will ensure that none of their person is engaged in any unlawful activities subversive of the Company's interest failing which suitable action may be taken against the Contractor as per the terms and condition of this order.

The Contractor shall be liable for payment of all taxes and duties as applicable, to the State/ Central Govt. or any local authority.

The Contractor's employees shall not be treated as Company's employees / persons for any purpose whatsoever & facilities/ benefits applicable to the Company's employees shall not be applicable to Contractor's employees. If due to any reasons whatsoever the Company is made liable to meet any obligation under any of the laws & enactment etc, for any reason whatsoever the same shall be recovered from the Contractor either from the present and future amount payable to him or as per law.

21. NOTICE & COMMUNICATION

Any notice or other formal communication to be given under this agreement shall be in writing and signed by or on behalf of the party giving it and shall be sent by registered post, A.D. to the addresses of Contractor or BRPL as mentioned herein above or to any other addresses as agreed by the parties, in writing from time to time.

Any notice or other formal communication can also be sent through official e-mail ID of authorized person of Contractor or BRPL.

22. SAFETY CODE

22.1 The Contractor shall ensure adequate safety precautions at site, as required under the law of the land to facilitate safe working, during the execution of work under agreement/work order and shall be entirely responsible for the complete safety of their workmen as well as other workers at site and premises during performance of work under agreement.

22.2 The Contractor shall observe the safety requirements as laid down in the agreement and in case of sub-contract/assignment (only after written approval of company), it shall be the responsibility of Contractor that all safety requirements are followed by the employees and staff of the sub-contractor.

22.3 The Contractor employing two hundred employees or more, including employees deputed under agreement, shall have a safety officer in order to ensure the implementation of safety requirements of the agreement and if the Contractor having lesser number of employees, including agreement workers, shall nominate one of its employees to act as safety coordinator who shall liaise with the safety officer on matters relating to safety and his name shall be displayed on the notice board at a prominent place at the work site.

22.4 The Contractor shall be responsible for non-compliance of the safety measures, implications, injuries, fatalities and compensation arising out of such situations or incidents.

22.5 In case of any accident, the Contractor shall immediately submit a statement of the same with BRPL and the safety officer, containing the details of the accident, any injury or causalities, extent of properly damage and remedial action taken to prevent recurrence and in addition, the Contractor shall submit a monthly statement of the accidents to BRPL at the end of each month.

22.6 The contractor / safety officer shall be responsible for providing training to all staff & workers, safety compliances, testing and fitness of all T&P, PPE, annual safety audit reports etc. in line with CEA norms.

23. CONTRACTOR'S OBLIGATIONS

23.1 The performance of Services as completed by the Contractor shall be wholly in accordance with the Contract and fit for the purposes for which they are intended to and as defined in the Contract. The Services shall include any Service which is necessary to satisfy the Company's requirements and as implied by the Contract.

23.2 The Contractor shall execute the Services within the time frame for completion as specified in the order/agreement and Scope of Work. Without prejudice to the provisions of the Contract, before commencing the Services, the Contractor shall satisfy itself regarding the BRPL's requirements. The Contractor shall give notice to BRPL, within forty-eight (48) hours of the receipt of BRPL's requirements, of any error, fault or other defect in the BRPL's requirements or such items of reference.

23.3 The Contractor takes full responsibility for the adequacy and stability of Services to be performed at the Site.

23.4 The Contractor shall at all times endeavour to adopt best practices as is prevalent in like industry and shall always be required to achieve the desired quality and confirm to the schedule of Service(s) at no additional cost to the company/BRPL.

23.5 The Contractor is deemed to have satisfied itself as to the correctness and sufficiency of the BRPL's requirements and other terms of the Contract relating to its risks, liabilities and obligations set out in or implied by the Contract and all matters and things necessary for the proper performance of the Services.

23.6 The Contractor shall, whenever required by the BRPL, submit details of the arrangement and methods which the Contractor proposes to adopt for the performance of the Services. No alteration to these arrangements or methods shall be made without the approval of BRPL.

23.7 Contractor agrees to provide all preliminary information or data as may be required by the Company/BRPL within fifteen days of issuance of the signed LOI/Work order or as per mutually agreed timelines.

23.8 In case the Contractor comes across with any ambiguity and/ or discrepancy in the BRPL's requirements, it shall immediately communicate such ambiguity and/ or discrepancy to BRPL, for seeking appropriate instructions to resolve such ambiguities and discrepancies.

23.9 Contractor to maintain sufficient cash flow as working capital to meet daily expenses for the Manpower.

23.10 The Contractor shall not use the name of the company/BRPL in any manner for credit arrangement or otherwise and it is agreed that the company/BRPL shall not in any way be responsible for any debts, liabilities or obligations of the Contractor or its Manpower.

24. INDEMNITY

The Contractor shall indemnity, defend, save and hold harmless all directors, company and its employees against any and all suits, proceedings, actions, demands and third party claims for any loss, damage, cost and expense suffered by company on account of the negligence, act or omission inaction by the Contractor or its employees under this Agreement. Agencies shall also wholly indemnity and compensate company against any theft, misappropriation, fraudulent act or omission, any collusion with customer/s, intentional recording of incorrect reading/DATA, or any other offence under the applicable laws or breach of obligation under the present agreement, and would also render itself liable to appropriate legal action being initiated against it by company.

The Contractor shall also be responsible and liable to company for any loss or damage caused to

company for any negligence or inaction, damage to the property of company caused by the Contractor or its employees.

25. SECRECY & CONFIDENTIALITY

25.1 The technical information, data and other related documents forming part of order and the information obtained during the course of investigation under this order shall be the Company's exclusive property and shall not be used for any other purpose except for the execution of the order. The technical information drawing, records and other document shall not be copied, transferred, or divulged and/or disclosed to third party in full/part, not misused in any form whatsoever except to the extent for the execution of this order.

25.2 These technical information, drawing and other related documents shall be returned to the Company with all approved copies and duplicates including data/drawing/plans as are prepared by the Contractor during the executions of this order, if any, immediately after they have been used for agreed purpose.

25.3 In the event of any breach of this provision, the Contractor shall indemnify the Company against any loss, cost or damage or claim by any party in respect of such breach.

25.4 The Contractor shall not use the name/logo/emblem of the Company in any manner either for credit arrangement or otherwise and it is agreed that the Company shall not in any way be responsible for the debts, liabilities or obligations of the Contractor and/or his employees.

25.5 The Contractor hereby covenant that the Contractor shall be responsible for theft, if any committed, by his staff and the Contractor shall indemnify Company from and against all claims, demands, actions, suits and proceedings, whatsoever that may be brought or made against the Company by or on behalf of any person, body, authority whatsoever and whomsoever and all duties, penalties, levies, taxes, losses, damages, costs, charges and expenses and all other liabilities of whatsoever nature which the Company may be liable to pay, incur or sustain by virtue of or as a result of the performance or non- performance or observance or non- observance by the Contractor of any of the terms and conditions of this agreement. The Company shall have full power and rights at its discretion to pay or defend or compromise any suits, claims or demands brought or made, whether pending or threatened touching upon this agreement as it may consider necessary or desirable and shall be entitled to recover from the Contractor all sums of money including all legal costs, charges and expenses incurred by virtue of any such compromises which shall not be called into question by the Contractor but shall be final and binding on the Contractor.

25.6 Contractor shall submit signed NDA as per the format 4.3 attached.

26. NON-EXCLUSIVITY

The award of the work order/agreement to the Contractor shall not preclude the Company from awarding the same order for similar work at the same rates, or on any terms and conditions to other party or parties. The Company at its discretion may place the order on any other party.

27. SEVERABILITY

If any provision of this Agreement is or becomes invalid or unenforceable by the courts of any jurisdiction to which it is subject, such invalidity or unenforceability shall not prejudice the remaining provisions of this Agreement, which shall continue in full force and effect.

28. ASSIGNMENT & SUBLETTING

The Contractor shall not, without company's prior consent in writing assign or sublet or transfer any portion of services awarded to the Contractor as envisaged herein and falling under this contract. Moreover, any such consent shall not relieve the Contractor from any obligation, responsibility, or duty under this Contract.

29. ASSIGNMENT BY THE COMPANY

The rights and obligations of BRPL under the Contract shall be assignable to Affiliates, associate company, joint venture or any other company including change in Management Control and BRPL's lenders without consent of the Contractor. Upon written notice of seven Business Days (07 days) by BRPL, the Contract shall be deemed to have been assigned to the third party under this Article. This Article fulfils its meaning notwithstanding the notice is not accepted by the Contractor and BRPL shall not be obliged to the Contractor after seven days (07) of issue of any further notice.

30. NO JOINT VENTURE

The Contractor shall not constitute a joint venture, consortium or other unincorporated grouping of two or more Persons, following the execution of the Contract.

31. WAIVER OF RIGHTS

No delay or forbearance by company in exercising any right or power under this Agreement shall be construed as a waiver of such right or power, nor shall any single or partial exercise of such right or power preclude any further exercise of such right of power.

32. THE COMPANY'S RIGHT TO VARY QUANTITIES

The Company reserves the right to vary the quantity i.e. increase or decrease the Numbers/ quantities without any change in terms and conditions during the execution of the Order. BRPL may increase or reduce the area/ scale of operations after starting of execution of the contract and the size of contract may be adjusted accordingly.

33. VENDOR CODE OF CONDUCT

Contractor confirms to have gone through the Policy of BRPL on legal and ethical code required to be followed by Vendors encapsulated in the "Vendor Code of Conduct" displayed on the official website of BRPL (www.bsesdelhi.com) also, which shall be treated as a part of the agreement.
Contractor undertakes that he shall adhere to the Vendor code of Conduct and also agrees that any violation of the Vendor Code of Conduct shall be treated as breach of the agreement.
In event of any such breach, irrespective of whether it causes any loss/damage, company (BRPL) shall have the right to recover loss/damage including liquidated damages from Contractor.
The Contractor herby indemnifies and agrees to keep indemnified the company (BRPL) against any claim/litigation/liability/penalty including litigation cost arising out of any violation of Vendor Code of Conduct by the Contractor or its officers, agents & representatives etc.

34. DISCLOSURE OF RELATIONSHIP

The Contractor acknowledges & undertakes that the Contractor or any partner of the Contractor or director of the Contractor is not related to any of the officers of the Company or the Company's Representative, or alternatively, is a close relative of an officer of the Company or the Company's Representative and has no financial interest/stake in the Company's business. The Parties agree that breach of the above provisions shall entitle the Company to terminate the Contract under Clause 23, without payment of any compensation to the Contractor. The Contractor agrees and acknowledges and shall ensure that its employees, directors and partners do not develop any such interest during the Contract Period.

35. MSME

35.1 If the Contractor is covered under the definition of supplier/Contractor under the purview of Micro, Small & Medium Enterprises Development Act, 2006, it shall declare so at the time of its registration as vendor with the Company failing which it will be presumed that it is a non-MSME unit.

35.2 Contractor shall provide to Company the proof of classification of its enterprise and filing memorandum with the authorities concerned under the Micro, Small & Medium Enterprises

Development Act, 2006 (herein referred to as "the MSMED Act") within one week of receipt of the Contract

35.3 The Contractor further declares and undertakes to intimate Company of any change in its status or constitution under this section from time to time under this Contract. The Contractor must provide MSME registration number along with PAN card and GST registration number on Tax Invoice failing which the Contractor shall not claim any benefit under the MSMED Act.

35.4 The Contractor to furnish the undertaking to the Company in this regard.

36. COVID GUIDELINES

Looking to the prevailing Covid19 situation, Contractor will ensure that the work carried out in the field by their staff shall be as per the guidelines issued by MHA / BRPL/ Engineer-in-charge from time to time. Further Contractor shall be required to provide to their staff masks/ sanitizers/ all PPEs required for working in Covid19 situation. The Contractor shall further ensure to work as per the guidelines issued by BRPL and the instruction of the Engineer in charge.

37. CLEANLINESS & PRECAUTIONS TO BE TAKEN WHILE DOING WORK AT SITE TO PREVENT DUST POLLUTION

All debris shall be removed and disposed of at assigned areas on daily basis. Surplus excavated earth shall be disposed of in an approved manner. In short, the contractor shall be fully responsible for keeping the work site clean at all times. In case of non- compliance, company shall get the same done at Contractor's risk and costs.

While carrying out any civil work including road/ pit digging, plinth/ fence making, road restoration etc. contractor shall adhere to below mentioned guidelines.

(a) No construction material/ debris shall be stored on metalled road.
(b) Wind breakers of appropriate height on all sides of ear marked area using CGI sheets shall be raised to ensure that no construction material dust fly outside ear marked area.
(c) The construction material i.e. coarse sand, stone aggregates, excavated earth, cement and any other material to and from the site shall be transported under wet and covered condition to ensure their non-slippage en-route to avoid air contamination.
(d) The contractor shall provide mask and helmet to every worker working on the construction site and involved in loading/unloading and carriage of construction material and construction debris to prevent inhalation of dust particles.
(e) Over loading of vehicles shall be strictly prohibited
(f) The construction material at site shall be stored under wet and covered condition.
(g) The dumping sites for temporarily storing the excavated earth shall be properly levelled, watered and rehabilitated by plantation to avoid flying of dust.
(h) The worker at the site shall be sensitized to adopt / observe the dust controlled measures in true spirit.
(i) If any C&D (Construction& Demolition) waste is generated at site, the same will be transported to the C&D waste site only and the record for the same will be maintained by the agency.
(j) Wet jet in grinding and stone cutting is being permitted at site.
(k) The necessary record for dust control is being maintained by the department on day to day basis and being monitored regularly.
(l) Dust/Wind breakers/barriers walls of appropriate height, i,e minimum 2 meter, shall be provided along the, stretch of the road cutting, wherever road width is more than 18mtr.(high significance)
(m) Loose soil or sand or construction & demolition waste or any other construction material that causes dust should be properly covered and the portion should be kept wet by sprinkling (high significance)

(n) Tarpaulin or green-net on stored dug up material/soil must be provided. (High significance)
(o) All vehicles carrying construction material/construction debris should be fully covered and protected so as to ensure that dust from construction material or debris does not become air borne during transportation. (High significance)
(p) All dug material/construction material of any, kind should be stored on the site and not dumped on public road or pavement/undesignated area. (High significance)
(q) Unpaved surface and area with loose, soil should be adequately sprinkled with water to suppress dust. (High significance)
(r) Every worker engaged in road cutting work should be provided with dust-mask to prevent inhalation of dust particles and safely equipment.
(s) The road cutting agency should display on board the prospective date of restoration of the road and agency responsible for road restoration.
(t) The road cutting agency shall provide proper signage for traffic diversion and movement on each stretch of road cutting.
(u) The road cutting agency shall ensure that vehicles involved in haulage of construction material have valid "Pollution under Control"(PUC) certificate,

The Execution contractor shall be responsible for all the preventive and protective environmental steps as per guidelines. Any violations from the above guidelines have been viewed very seriously by the authorities. Contractor shall be liable for the penalties / other action by the authorities, the contractor shall indemnify BRPL from all liabilities on this account.

38. ENVIRONMENTAL, HEALTH & SAFETY

The Contractor will ensure that the Environment, Health & Safety (EHS) requirements are clearly understood and faithfully implemented at all levels at site as per instruction of Company/BRPL. Contractors must comply with the requirements, as follows:
(i) Comply with all of the elements of the EHS Plan and any regulations applicable to the work
(ii) Comply with the procedures provided in the interests of Environment, Health and Safety
(iii) Ensure that all of their employees designated to work are properly trained and competent
(iii) Ensure that all plant and equipment they bring on to site has been inspected and serviced in accordance with legal requirement and manufacturer's or supplier/Contractor s' instructions
(iv) Make arrangements to ensure that all employees designated to work on or visit the site present themselves for site induction prior to commencement of work
(v) Provide details of any hazardous substances to be brought onsite
(vi) Ensure that a responsible person accompanies any of their visitors to site.

38.1 Measures related to the Tree Pruning, excavation near tree and construction & demolition:

Notwithstanding anything stated in the tender document, work contract or any other communication issued related to the performance of the work order awarded, it is clarified that the vendor and its associate/employees/worker, during the performance of work under this work order(s), shall ensure full compliance of the provisions of all environment laws/rules/directions by any authority including judicial authority/ regulation related to excavation near tree and construction & demolition activity, and shall mandatorily comply the following instructions:

A. Tree Pruning, Planning, Installation and Maintenance of Utility Apparatus in proximity to trees shall be done mandatorily by ensuring the following prescribed measures:

1) No excavation work shall be done within two (2) meters of the Tree Trunk.
2) Any exposed roots beyond 2 meters of the tree trunk, should be protected with dry sacking and backfilling must be done with a suitable manure mixture and/or the compost material mix as soon as possible on the completion of the works.
3) For any excavation to be carried out beyond the prescribed distance of 2 meters but within 3 meter from the tree trunk, manual methods (by use of hand) or by using trenchless techniques

shall be preferred over use of a mechanical excavation.
4) No roots shall be cut during the excavation work.
5) Not to lean any materials against or chain mechanical plants to the trunk of the trees.
6) Avoid any soil contamination from oil, gasoline, paint and paint thinner or other chemicals.
7) No concrete or construction or repairing work shall be done at least within two (2) meter radius of the trunk of trees.
8) All the electric wires and high tension cables and other apparatus relating to supply of electricity shall permanently be removed from the trees branches.
Records to be maintained by the supervisor to demonstrate adherence to the guidelines for excavation in Proximity to the Trees:

1) Ensure pre and post photography and videography of the site demarcated for the excavation work and the same shall not be deleted/removed until securing the prior permission of the Circle head O&M.
2) While digging and upon exposure to the roots- take immediate photographs of the same and report the matter to senior officers for further guidance.
If any unauthorized layering of other cables is being carried out at the digging site by some other agency/person, then immediately capture photographs of the same and inform the seniors, who shall take suitable legal actions, if required, which includes intimating to tree officer about such unauthorized laying of wires by such agency.

38.2 Provision of Safe Working Conditions:
Proper barricading shall be created during height work, cable laying work, working on pole, etc. Dimensions of barricading while cable laying work- Height- 2 mtr, Length- 1.5 mtr. There shall not be any gap in between two barricades. LED Bacon light shall be placed at 1st and every 4th barricade. However, while working on pole during supply maintenance work there should be a barricading cone and caution tape. In narrow lanes, where proper barricading as per rules is not possible, use barricading as per the approval of respective safety circle head in writing and copy forwarded to safety and uploading in QMS.

B. DUST MITIGATION MEASURES FOR CONSTRUCTION & DEMOLITION ACTIVITIES
Any construction/demolition/excavation related activity performed in furtherance of the performance of work under award, be undertaken only after ensuring the Dust Mitigation Measures prescribed as follows:

1) Dust/wind breaking walls of appropriate height around the periphery of the construction site.
2) Installation of Anti Smog Gun(s) (for >20,000 m2 built up area).
3) Tarpaulin or green net on scaffolding around the area under-construction and the building.
4) All vehicles including carrying construction material and construction debris of any kind should be cleaned and wheels washed.
5) All vehicles carrying construction material and construction debris should be fully covered and protected.
6) All construction debris and construction material of any kind should be stored on the site and not dumped on public roads or pavements.
7) No loose soil or sand or Construction & Demolition Waste or any other construction material which may cause dust, shall not be left uncovered.
8) No grinding and cutting of building materials in open area. Wet jet should be used in grinding and stone cutting.
9) Unpaved surfaces and areas with loose soil should be adequately sprinkled with water to suppress dust.
10) Roads leading to or at construction sites must be paved and blacktopped i.e., metallic roads (for >20,000 m2 built up area).
11) Construction and demolition waste should be recycled on-site or transported to authorized recycling facility and due record of the same should be maintained.
12) Every worker working on construction site and is involved in loading, unloading and carriage

of construction material and construction debris should be provided with dust-mask to prevent inhalation of dust particle.
13) Arrangement should be provided for medical help, investigation and treatment to workers involved in the construction of building and carry of construction material and debris relatable to dust emission.
14) Dust mitigation measures shall be displayed prominently at the construction site for easy public viewing.
15) Ensure the compliance of all dust control measure.

It is clarified that BRPL has zero tolerance with respect to the non-compliance/breach of environment laws/rules/directions by any authority including judicial authority/ regulation. Accordingly, in case of breach by the vendor/its associate/employee/worker to the laws/rules as detailed above, shall be termed as serious breach to the terms of work order and BRPL shall be free to take all actions against vendor for such breach of contract including the termination of the said contract. Additionally, the vendor shall also be liable to indemnify BRPL/its Directors/Officers/Employees/Associates in full including the payment of all loss/penalties/compensation including environment compensation as imposed by any judicial/quasi-judicial citing/alleging such breach.

The vendor shall also be under a mandate to provide an Undertaking to BRPL, which includes that the excavation, tree pruning, construction and demolition work, if performed by such vendor, the same shall be in strict adherence of all environment laws/rules/directions by any authority including judicial authority/ regulation and all the measures provided in work order/tender under the head/title "Measures related to the Tree Pruning, excavation near tree and construction & demolition".

Call Before You Dig (CBuD) Clause - In this regard, any penalty levied by the Government authority for non-compliance with the requirement of entering excavation details in the CBuD App shall be borne entirely by the vendor, including any overhead charges, as determined by the EIC as per attached Annexure – IV - Page no: 197.

39. ACCEPTANCE

Acceptance of the CONTRACT implies and includes acceptance of all terms and conditions enumerated in the CONTRACT, in the technical specification and drawings made available to the Contractor consisting of general conditions and complete scope of work.

Contractor's and Company's contractual obligations are strictly limited to the terms set out in the CONTRACT.

Annexure:

Undertaking from the _____(Vendor- undertaking the excavation work)
I _____, Proprietor of M/s_____, having R/o. at _____
Has been awarded a work order no._____,dated_____, from BSES Rajdhani Power Limited (BRPL), to carry out digging/excavation work on the stretch of road detailed in the work order.
Details of the Road cutting permission are RCP no. _____ dated _____ valid from _____ to _____ on the stretch of road detailed in the work order.
I have read the Guidelines on Excavation (as enclosed) and understood the same in sense and sprit. I assure that I shall abide with the said guidelines along with the all other provision associated with laws relating to laying of cables under the said work order.
I do herby undertake that I shall be fully responsible for any violation of any kind and shall be liable for any cost consequences, penalty, liability, damages if imposed by any authority court citing/disputing the performance of the task.
I further undertake to indemnify BRPL its officers, directors, employees and associates from any

cost consequences, penalty, liability, damages if imposed by any authority court citing/disputing the performance of the task.

I do herby agree and confirm that forming a part of work order/agreement and breach of this undertaking shall be termed as breach of the terms of the said work order/agreement.

I have read and understood the terms of this undertaking and submitting this undertaking out of my own accord and without any coercion.

Deponent

*****

BSES

SECTION – V : SCOPE OF WORK

BSES

BSES Rajdhani Power Ltd.

SECTION-V

SCOPE OF WORK

SCOPE OF WORK:

The scope includes material transportation, GPR Survey of Route, digging of trench, cable laying, Supply and Laying HDPE Pipes, cable cover, Backfilling levelling of trench, Covering of Malba, Dust mitigation Measures at Site, close Barricading, Removal of Surplus Malba, Fabrication and Erection of Steel Structure, Erection of 66kV monopoles , Deployment of all required cranes, tools & tackles, and safety equipment necessary for the monopole erection works , Dismantling of the existing D/C 66kV overhead line including Towers, Supply & Installation of LIU, OFC laying, Termination etc.

Shifting of 66 KV O/H Feeder from 220 KV Okhla to Malviya Nagar circuit no 1 & 2 from DMRC casting Yard near Pushpa Bhawan to Khanpur T Point for construction of DMRC L-11 corridor from G Block Saket to Lajpat Nagar - Scheme No: ES26SH1003.

Note:

While carrying out trenchless / open digging works the existing underground cables are liable to get damaged leading to High Risk Safety Hazard to the working people. To arrest above problem to the best degree possible, there are technology support available, like Cable Route Tracer which is an important tool to detect the live / dead cables underground to the depth upto 3 meters, comfortably. The vendor must employ Cable Route Tracer before start of excavation / trenchless job and submit reports to the Engineer-in-charge for clearance to start the job. The above will minimize the risk of cable damage and improve safety of the working people.

It may please be noted that in case bidders have no “Cable Route Tracers" with him, as a basic necessity tool. Heavy penalty will be imposed on the vendors, if the vendor damages the cables. The preferable make for the Cable route tracer shall be 3M or equivalent make.

Also, Cable laying should be as per BRPL technical specifications and erection of free issue materials, Transportation, loading, unloading from BRPL Store to Site, Temporary storage at site, assembly, erection, structural, complete pre-commissioning checks , testing and commissioning at site , obtaining statutory clearance & certification from state electrical inspector, Municipal Corporation department (if required), Fire Officer (if required), Horticulture department (if required), and handing over to owner after successful testing & Commissioning of Bay at BRPL, New Delhi .Schedule of work shall be as per BOQ attached herewith.

After completion of E/T/C work of the scheme, Bidder has to obtain the Electrical Inspectorate's Clearance/Safety Clearance from the Electrical Inspector of Delhi Govt./Safety Inspector BRPL(whichever is applicable) Electrical Inspector Clearance fees shall be in Bidder’s scope**.** The related fees, payments and pursuance work shall be in scope of Bidder only. The contractor has to obtain Electrical Inspectorate's clearance/ Safety Clearance from Safety Inspector BRPL of the installation and to be handed over to Engineer in charge.

Bidders should have basic testing equipments like PC Set, Sheath Fault measurement Kit, Meggar Kit, available with his company & shall submit the list of tools & tackles, with Sl No, Make & Calibration certificates suitable for carrying out the specified job tendered for.

All loading/unloading, of materials at work-site shall be Bidder’s responsibility. Involvement of Crane/Hydra/Tractor/Trailer for this type of work shall be in your scope. Adequate weather protection

shall be provided by the Bidder to keep the materials safe from sun & rain by providing covered storage space as well as using tarpaulins.

All the labour, cranes, power, tool and tackles, technical supervision etc. are including in your scope of work. Adequate number of engineers, supervisors and labours shall be posted at site and the list of the same along with certificate of Qualification of technical staff should be submitted by the Contractor to the Company for checking the adequacy immediately after award of contract.

The Vendor shall coordinate with the relevant civic agencies to obtain all necessary road-cutting permissions from the Delhi civic authorities, including MCD, DDA, PWD, DJB, and any other applicable authorities, as well as traffic permissions from the Delhi Police, to ensure that the execution of the work proceeds without any delays. However, the applicable Road Restoration (RR) charges shall be paid directly by BRPL to the respective civic agencies.

The Bidder shall also make his own arrangement for the accommodation/conveyance requirements for its staff at site. Company will be provided at site the adequate open space for Bidder's site store for storing the materials, tools, tackles etc. The entire Bidder's storage will be within the site premises. All the incoming and outgoing materials, equipment, tools, tackles and any other items related to said work shall be entered into the register kept for this purpose and shall be in the custody of Bidder, however company does not hold any responsibility for any loss or damage of Bidder's material etc.

The Bidder at his own shall arrange Water and Electricity Power at his cost.

Major materials like 66 kV cable, 66 kV straight through joints, 66 kV I/D or O/D end Termination, Structural Steel etc. will be issued by BRPL as free issue item. However transportation of all free issue materials from BRPL stores to BRPL S/S, handling, safe storage till handing over of the installations shall be in the scope of the contractor.

FREE ISSUES OF MATERIAL AND /OR EQUIPMENT:

The Purchaser issued Free Issue Material/Equipment to Vendor in order that Vendor may fulfill its obligations under the Agreement, shall remain the property of Purchaser and shall be clearly labeled as such by Vendor until handing over of the completed installations in accordance with the terms of the Agreement. Risk of loss in respect of all such Free Issue Items shall pass to Vendor upon receipt of such terms by Vendor and remain with Vendor until handing over of the completed installations to Purchaser in accordance with the terms of the Agreement. Vendor shall maintain all such Free Issue Items in good condition and shall use them solely in connection with the requirements of the Agreement.

Special Instruction:-

a. CES shall consider completion certificate of different projects (which shall be submitted by bidders in support to PQR) as a performance certificate during tender evaluation.
b. All Erection tools and tackles and testing equipment shall be available with Bidder in event of order.
c. Penalty clause shall be incorporated in case any of workmen of Bidder is found violating safety protocol as per GCC-ETC LD Clause no 15.
d. GTP & drawing approval before procurement & inspection of the ready material before dispatch shall be done by CES-BRPL.
e. 1.1 Continuous Metal Barricades:-
   1) Vendor shall demonstrate to BRPL Engineer in Charge, ready availability of Metal Barricades (With Specifications as per BSES Standards for continuous barricading) within 15 Days of Order Award. Barricades not conforming to BRPL specification shall be summarily rejected.

2) BRPL will permit Excavation only after Minimum Length of Barricades is made available at Site.
Minimum Length of Barricades: Must be equal to the Route Length of Cable Laying OR 600 MTR (2 Runs X 300 MTR), whichever is Lower. Thus:-

a) If Route Length of Cable Laying is < 600 MTR, then Min-m Length of Barricades to be made available at Site = Actual Route Length,
b) If Route Length of Cable Laying is > 600 MTR, then Min-m Length of Barricades to be made available at Site = 600 MTR

3) Non-compliance of above will lead to immediate termination of Contract and may also result in - a) Forfeiture of Security Money b) Disqualification from future Tender participation for a Min-m 1 Year Period ".

f. All Erection tools and tackles and testing equipment shall be available with Bidder in event of order.
g. Penalty clause shall be incorporated in case any of workmen of Bidder is found violating safety protocol as per GCC-ETC LD Clause no 15.
h. From each lot of HDPE Pipe, a sample will be sealed by Site in-charge/Execution Engineer in presence of Vendor representative and sent to any laboratory as per BRPL Engineer-In-Charge's instruction. Cost of testing will be paid by the Concerned Vendor. Also, strict action will be taken against the vendor does not conform to BRPL specification.
i. HDPE tech spec is also attached for your further process.
j. HDPE type-- PN6 PE80
k. Length -- As per site requirement
l. Diameter -- As per attached Technical Specification
m. Make -- Flow well, Tirupati, Naredra Poly Plast, Eon Plast
n. Type test & Printing -- As per attached Technical Specification
o. GTP & drawing approval before procurement & inspection of the ready material before dispatch shall be done by CES-BRPL.

6. <u>ADDITIONAL SCOPE / WORK</u>:

Any additional work beyond the scope enumerated in the work order above shall be carried out as per the instructions of Engineer-In Charge. The company shall not entertain any claim or increase in the Work Order value due to execution of such additional work if the same is not approved by Engineer In Charge.

BSES

SECTION – VI: PRICE BID

BSES

BSES Rajdhani Power Ltd.

SECTION – VI: PRICE BID

BOQ - SERVICE

Scheme No: ES26SH1003

Shifting of 66 KV O/H Feeder from 220 KV Okhla to Malviya Nagar circuit no 1 & 2 from DMRC casting Yard near Pushpa Bhawan to Khanpur T Point for construction of DMRC L-11 corridor from G Block Saket to Lajpat Nagar.

S.NO.	SERVICE CODE	DESCRIPTION	UNIT	QTY	RATE	AMOUNT
1	4060426	Transportation of electrical equipment from store/any site in Delhi to site of work in Delhi including loading and unloading at both ends manually.(Considering max lead of 50KM)	TRP	15		
2	4060425	Transportation of electrical equipment I.e. CB, CT, PT, ISOLATORS, LA, CABLE DRUMS etc. from store/any site in Delhi to site of work in Delhi inclding loading and unloading at both ends by using T & P such as Tripod/cranes etc.(Considering max lead of 50KM)	TRP	32		
3	4060427	Transportation of Empty cable drum from site to site or from site to store anywhere in Union teritory of Delhi.	TRP	27		
4	4060424	Transportation of various material like 40 mm dia Rod 12-15 mtrs long by 25 T tailor from store/any site in Delhi to site of work in Delhi including loading and unloading at both ends manually.(Considering max lead of 50KM)	TRP	2		
5	4060371	Digging of cable trench as per specification and drawings. Rate is inclusive of digging and backfilling. Measurement shall be as per actual depth excavated. For Rocky Soil	CUM	1521		
6	4060369	Digging of cable trench as per specification and drawings. Rate is inclusive of digging and backfilling. Measurement shall be as per actual depth excavated. For Dense Carpeted bituminous Road.	CUM	540		
7	4060379	Digging of joint pit suitable for 33/66 KV cable joint box and covering the joint box with sand and providing protection as per BYPL/BRPL design. For Hard Rocky Soil	Cum	180		
8	4060377	Digging of joint pit suitable for 33/66 KV cable joint box and covering the joint box with sand and providing protection as per BYPL/BRPL design. For Dense carpeted bituminous road.	Cum	72		
9	4060385	Digging of test pits of required size(not less than 1/2 Mtr. Wide at site for identification of cable route). Relevant volume shall be deducted from quantities of same item of cable digging For Hard Rocky Soil	EA	27		
10	4060383	Digging of test pits of requried size(not less than 1/2 Mtr. Wide at site for identification of cable route). Relevant volume shall be deducted from quantities of same item of cable digging For Dense carpeted bituminous road / CC Road	M	12		
11	4060388	Laying of underground cable in trench ,covering with RCC cable cover, covering with sand ,Sand cushion will be min 75mm below and 75mm above the cable, fixing of cable identification tags (9" X 4") at every 30 Mtrs, Laying of warning tape above 250mm of the docket, refilling the trench and ramming the surface & removal of malba if any, including watch and ward till charging of cable (This activity includes only labour jobs) for 66 KV three core cable Running Mtr	M	7880		
12	4060389	Extra for handling of 66KV Cable from cable drum. Note: If the Drum length is more than 250Mtr.	M	7880		
13	4060373	C104-Providing/Lay Sand Cushioning	CUM	550		
14	3012450	Laying of HDPE pipe of 225mm dia. of PN6 Class PE80 For crossing of roads by trenchless technology including required equipment, manpower & transport of equipment from one place to another.	M	1800		
15	3005531	Crossing of roads by trench-less technology by laying of HDPE pipe excluding supply of pipe .Laying by Pneumatic Jack Hammer Road Cutting, laying, 225mm dia	M	1500		
16	4060398	E301-Lay of HDPE Pipe	M	200		
17	4060353	Providing and laying in position specified grade of reinforced cement concrete excluding the cost of shuttering, centring, finishing and reinforcement-All work up to plinth level : 1:2:4 (1cement :2 coarse sand :4 graded stone agg.20mm nominal size.)	CUM	20		

BSES

BSES Rajdhani Power Ltd.

18	4060372	Removal of Malba including Loading / Unloading on own vehicle. The payment shall be restricted to the quantity of sand laid.	CUM	605		
19	4060395	Charges for Hi pot test - Testing equipment to be provided by the contractor. For 66 KV cables	EA	8		
20	4060000	E711-Route Survey for cable laying work	M	7880		
21	4060357	E709-Supply & Fix Danger plate	EA	4		
22	4060359	E709-Supply & Fix Phase plate	EA	4		
23	4060360	E709-Supply & Fix Ckt Plate	EA	4		
24	3003308	C11605-Paint Nomenclature, HT/LT Equip	CHR	300		
25		E301-Providing Steel Barricade	M	1970		
26		Installation of RCC Cable Cover	EA	5067		
27		Installation of RCC Cable Route marker	EA	39		
28		ETC of Electronic Ball --Passive	EA	39		
29		ETC of Electronic Ball --ACTIVE	EA	28		
30	4060342	C139-Survey report i/c site plan	M	1970		
31		RCC Coffin (one set consist of nos. of coffin to cover one joint)	SET	28		
32	4060249	Fabrication of MS structure as well as galvanized for different equipment like isolator, C.T.'s, P.T.'s, CVT, LA's etc, cable supporting structure including supply of nuts and bolts, consumables, welding electrode, hacksaw blades etc. excluding supply of steel.	MT	11.4		
33	4060348	Erection of MS as well as galvanized structure for different equipment like isolator, C.T.'s, P.T.'s, CVT, LA's , ISO etc, cable supporting structure, 33kV/66 kV GI gantry structure , Tower Structure i/c consumables , welding electrode ,tack welding & hacksaw blades etc.	MT	5		
34	4060400	Painting of any M.S. Structure with one coat of Red oxide and two coats of AL. paint ISI marked including supply of paint by contractor.	KG	11400		
35	4060254	E709-Erection of 42' Rail Pole	EA	8		
36	4060405	Digging of earth pit up to depth of 10 ft. in rocky/ semi rocky as per feasibility at site of embedding 600 x600mm earth plate with M.S Flate 50 x8 mm running the same through 3/4 " dia G.I. grouting pipe. Earth Plate to be covered by charcoal 200kg. And 100 Kg. Sodium chloride in the earth pit and refilling etc. NOTE: Charcoal, common salt, earth plate, G.I. Pipe, MS flat, Badarpur, Cement and bricks to be supplied by the contractor	EA	28		
37	4060409	Making of civil goomitties around GI earth pipe as per standard design of BSES. Supply of necessary bricks, cement, badarpur, sand, C1 cover of size 1'x1' and providing the same at the top of goomitties.	EA	28		
38	4060390	Grouting of cable mounting structure with cement concrete having ratio 1:3:6 including fixing with gantry structure. Badarpur, cement and stone ballast shall be supplied by contractor. Suitable for mounting 33/66 KV cable.	EA	2		
39		Supply & Fixing of LA Insulators	EA	36		
40	4000229	Supplying and spreading uniformly in yard of grid s/stn. blue stone aggregate 20 mm single size of good quality i/c loading, unloading for all leads & lifts complete, as per direction of Engineer in charge.	CUM	7		
41	4060363	Supply and fixing of wire mesh fencing 2.65 mtr height with gate frame of 3 mtr x 2.5 mtr with complete material eg angle, chain link, wire mesh and civil material etc complete as per specification, drawing no. Angle iron size 50x50x6 mm & MS strip 50 x 3 mm wire mesh 1"x3", 8 SWG wire to be used for wire-mesh with providing support at 1.25 distances.	SQM	115		
42		Brick work with common burnt clay F.P.S. (non modular) bricks of class designation 7.5 in foundation and plinth in cement mortar 1 : 6 (1 cement : 6 coarse sand)	CUM	4.4		
43	4000161	12 mm cement plaster of mix 1:4 (1 cement : 4 fine sand)	Sqm	21.6		
44	4000159	15 mm cement plaster on rough side of single or half brick wall of mix 1:4 (1 cement : 4 fine sand)	Sqm	21.6		
45	4060169	Erection of electrical equipment Including supply of T & P, all consumable items such as welding rods, hacksaw blades etc and minor modification in support structure for fixing as required. For 66 kV LA's with or without surge counter	EA	6		

46	4060329	Dismantling of ACSR GOAT Conductor, Earth wire, Insulator & Hardware Fittings i.e. Single Tension String Insulator fittings with single tension clamp for single GOAT conductor ,Single Tension String Insulator fittings with double tension clamp for twin GOAT conductor, Double Tension String Insulator fittings with single tension clamp for single GOAT conductor, Single Suspension String Insulator fittings with single drop/tension clamp for single GOAT conductor, Single Suspension String Insulator fittings with double drop/tension clamp for twin GOAT conductor, Single Suspension String Insulator fittings with single suspension clamp for single GOAT conductor, Single Suspension String Insulator fittings with double suspension clamp for twin GOAT conductor ,Bolted type 'T' Connector suitable for single GOAT conductor, Vibration Damper for GOAT Conductor, Repair Sleeve for GOAT, Mid span compression joint for ACSR GOAT, Rigid Type Spacers for twin GOAT PER CIRCUIT INCLUDING EARTH WIRE(PER CIRCUIT MEANS 3 CONDUCTORS AND ONE EARTH WIRE INCLUDING HARDWARE FITTINGS AND ACCESSORIES)	KM	4		
47	4060337	Dismantling of MS as well as galvanized structure for different equipment like isolator, C.T.'s, P.T.'s, CVT, LA's , ISO etc, cable supporting structure, 33kV/66 kV GI gantry and tower structure including consumables , welding electrode & hacksaw blades etc.	MT	28		
48	4060349	Making termination in the existing line i/c. sagging and jumpering complete for 6Nos.Conductors with one earth wire.	EA	3		
49		VLF high Voltage test as per IEEE400.2	LS	1		
50		VLF Tan Delta Test as per IEEE400.2	LS	1		
51		VLF Partial Discharge Test as per IEEE400.2	LS	1		
52		Sheath Integrity Test as per IEEE400.2	LS	1		
53	4060256	Stringing of ACSR GOAT Conductor, Earth wire, Insulator & Hardware Fittings i.e. Single Tension String Insulator fittings with single tension clamp for single GOAT conductor ,Single Tension String Insulator fittings with double tension clamp for twin GOAT conductor, Double Tension String Insulator fittings with single tension clamp for single GOAT conductor, Single Suspension String Insulator fittings with single drop/tension clamp for single GOAT conductor, Single Suspension String Insulator fittings with double drop/tension clamp for twin GOAT conductor, Single Suspension String Insulator fittings with single suspension clamp for single GOAT conductor, Single Suspension String Insulator fittings with double suspension clamp for twin GOAT conductor ,Bolted type 'T' Connector suitable for single GOAT conductor, Vibration Damper for GOAT Conductor, Repair Sleeve for GOAT, Mid span compression joint for ACSR GOAT, Rigid Type Spacers for twin GOAT PER CIRCUIT INCLUDING EARTH WIRE(PER CIRCUIT MEANS 3 CONDUCTORS AND ONE EARTH WIRE INCLUDING HARDWARE FITTINGS AND ACCESSORIES)	KM	0.1		
54		Civil Foundation of 66kV D/C Monopole PD (30-60deg) with BXA@17M, span of 250m for ACSR Goat Conductor	EA	1		
55		Erection of 66kV D/C Monopole PD (30-60deg) with BXA@17M, span of 250m for ACSR Goat Conductor	EA	1		
56		Design Validation of Monopole from IIT.	EA	1		
57		Soil Investigation charges	EA	1		
58		Charges of OEM During erection	EA	1		
59		Erection of Number plate	EA	4		
60		Erection of Danger Plate	EA	4		
61		Erection of Phase Plate in Set of red Blue & Yellow	EA	4		
62		Erection of DVC,ANTI CLIMBING MONOP;MS GALVANISED	EA	1		
63		Erection of Single Tension compression Fitting for ACSR Goat	EA	12		
64		Erection of INSLTR,DISC;CER;11KV;ANTIFOG TYP;120KN	EA	108		
65		Erection of Vibration Damper	EA	18		
66		Erection of Tension Clamp earth wire	EA	2		
67		Supply of INSLTR,DISC;CER;11KV;ANTIFOG TYP;120KN	EA	108		
68		Supply of CNDCTR,ACSR GOAT UNINSUL	M	300		
69		Supply of Single Tension bolted type Fitting for ACSR Goat	EA	6		

70		Supply of Single Tension compression Fitting for A	EA	12		
71		Supply of Vibration Damper	EA	18		
72		Supply of Tension Clamp earth wire	EA	2		
73		Supply of LUG,CRIMPING;630MM2;HVYDTY LG BRL	EA	24		
74		Supply of TAPE,SFTY BARR,150MM;PVC;DNGER 66KV BSES (WARNING TAPE)	M	3040		
75		Supply of TAG,SFTY,RCTNGL;AL;MTLC	EA	458		
76		Supply of CVR,CBL;600X550X50MM;RCC	EA	5067		
77		Supply of MRKR,CBL;ELEC BAL MRKR PASSIVE	EA	39		
78		Supply of MRKR,CBL;ELEC BAL MRKR ACTIVE	EA	28		
79		Supply of APD,CBL ROUTE MRKR;RCC	EA	39		
80		Supply of RCC Coffin (one set consist of nos. of coffin to cover one joint)	EA	28		
81		Electrical Inspection Fees	LS	1		
		Total value in Rs.				
		GST @ 18%				
		Net Total value in Rs.				

BSES

BSES Rajdhani Power Ltd.

BOQ- SUPPLY

Scheme No: ES26SH1003

Shifting of 66 KV O/H Feeder from 220 KV Okhla to Malviya Nagar circuit no 1 & 2 from DMRC casting Yard near Pushpa Bhawan to Khanpur T Point for construction of DMRC L-11 corridor from G Block Saket to Lajpat Nagar.

S.NO.	DESCRIPTION	UNIT	QTY	Basic Rs.	Freight Rs.	GST Rs.	Unit Landed Rs.	Total Landed Cost Rs.
1	66kV D/C Monopole PD (30-60deg) with BXA@17M, span of 250m for ACSR Goat Conductor	EA	1					
2	CLMP, PARRL GROV, ACSR GOAT CNDCTR	EA	18					
3	ARRSTR, ELEC, OUTDR ELEC;60KV;10KA	NOS	6					
4	ANGLE, STRCTL, 65MM;65MM;6MM;MS	MT	2					
5	POLE, RAIL, MS, 105LBS	KG	5400					
6	CHNL, STRCTL, ISMC; 150MM; 75MM; 16.8KG/M; MS	KG	500					
7	CHNL,STRCTL,ISMC100;100MM;50mm;7.7mm	KG	2500					
8	STRIP,MTLC,EARTHNG;50X6MM;MS GALVANIZED	KG	1000					
9	DVC, ANTI CLIMBING MONOP;MS GALVANISED	EA	1					
10	PI,SPL PUR, 225MM; HDPE; PE80PN6; ROLLING	M	3500					
	Total value in Rs.							
	GST @ 18%							
	Net Total value in Rs.							

BSES

BSES Rajdhani Power Ltd.

GRAND SUMMARY OF THE QUOTED PRICE

Sr. No.	Scheme no.	SCHEME DESCRIPTION	Total price for supply F.O.R site inclusive all duties taxes	Total Price for Erection, Testing & Commissioning inclusive all Taxes (INR)	Grand Total (INR)
1	ES26SH1003	Shifting of 66 KV O/H Feeder from 220 KV Okhla to Malviya Nagar circuit no 1 & 2 from DMRC casting Yard near Pushpa Bhawan to Khanpur T Point for construction of DMRC L-11 corridor from G Block Saket to Lajpat Nagar.			
	TOTAL Package Cost				
In words :					

We declare that the following are our quoted prices in INR for the entire project/schemes.

Date: Bidder Name:

Place: Bidders Address:

Name & Signature: ……

Designation: ……

Common Seal: ……

BSES

BSES Rajdhani Power Ltd.

Appendix- I

COMMERCIAL TERMS AND CONDITIONS – SUPPLY

Sr. No.	Item Description	AS PER BRPL	BIDDER'S CONFIRMATION
1	Validity	120 days from the due date of submission or amended due date of submission	
2	Price basis	a) **Firm**, FOR Delhi store basis. Prices shall be inclusive of all taxes & duties, freight up to Delhi stores. b)Unloading at stores - in vendor's scope c) Transit insurance in Bidder scope	
3	Payment terms	a. 80% against R/A bills within 30 days against receipt of material at site. b. 10% pro-rata after installation/erection of equipment c. 10% pro-rata after completion of successful acceptance testing, commissioning and handing over of the entire Installation and duly certified by BRPL Project-in-charge.	
4	Completion time	6 months from date of LOI/Order	
5	Defect Liability period	12 months from the date of Handing over of entire Installation.	
6	Liquidated damages	0.5% of total price for every week delay subject to maximum of 10% of total contract value	
7	Contract Performance Bank Guarantee	As mentioned above clause no.8 section III (A) page no. 26 of CPBG	

Note: RA is mandatory. The bids will be evaluate commercially based on the total all inclusive price. BRPL reserves the right to evaluate the bid in totality or partially. RA methodology will be informed separately to all the qualified bidders prior to RA.

BSES

BSES Rajdhani Power Ltd.

Appendix-II

COMMERCIAL TERMS AND CONDITIONS – E/T/C

Sl No	Item Description	AS PER BRPL	BIDDER'S CONFIRMATION
1	Validity	120 days from the due date of submission or amended due date of submission	
2	Price basis	**Firm**. Prices shall be inclusive of all taxes & duties.	
3	Payment terms	a) 80% pro-rata of total installation value shall be payable against R/A bills payable within 30 days after installation/erection of material at site duly certified by Engineer in charge. b) 10% pro-rata of total installation value shall be payable against R/A bills payable within 30 days after testing & commissioning of material at site duly certified by Engineer in charge. c) 10% of contract value payable after completion of successful acceptance testing, commissioning and handing over of complete systems duly certified by Engineer in charge, submission of Electrical Inspector Clearance Certificate.	
4	Completion time	6 months from date of LOI/Order	
5	Defect Liability period	12 months from the date of Handing over of entire Installation.	
6	Liquidated damages	0.5 % of the order value for each week or part there of delay until the actual date of completion up to a maximum deduction of 10% of total order value	
7	Contract Performance Bank Guarantee	As mentioned above clause no.6 section III(B) page no. 34 of CPBG	

Note: RA is mandatory. The bids will be evaluate commercially based on the total all inclusive price. BRPL reserves the right to evaluate the bid in totality or partially. RA methodology will be informed separately to all the qualified bidders prior to RA.

BSES Rajdhani Power Ltd.

ANNEXURE – I: BID FORM

To,

Head of Department,
Contracts & Material Department,
BSES RAJDHANI Power Ltd
Ist Floor, C Block
BSES Bhawan, Nehru Place
New Delhi 110019.

Dear Sir,

1 We understand that BRPL is desirous of awarding the contract for……. (Name of the Work) work in its licensed distribution network area in Delhi.

2 Having examined the Tender Documents for the above named works, we the undersigned, offer to deliver the goods/services in full conformity with the Terms and Conditions, technical specifications & Scope of Work as may be determined in accordance with the terms and conditions of the contract. The quoted amounts for this work are in accordance with the Price Schedules attached herewith and are made part of this bid.

3 If our Bid is accepted, we undertake to deliver the entire goods/services as per delivery/ completion schedule mentioned in Section III from the date of award of order/letter of intent.

4 If our Bid is accepted, we will furnish a Contract Cum Performance Bank Guarantee (CPBG) for due performance of the Contract in accordance with the Terms and Conditions of the NIT.

5 We agree to abide by this Bid for a period of 180 days from the due date of bid submission and it shall remain binding upon us and may be accepted at any time before the expiration of that period.

6 We declare that we are aware of the provision of all Laws associated with the supply of equipment's/materials or Services and the prices have been quoted accordingly.

7 Unless and until Letter of Intent is issued, this Bid, together with your written acceptance thereof, shall constitute a binding contract between us.

8 We understand that BRPL is not bound to accept the lowest, or any bid BRPL may receive.

9 There is provision for Resolution of Disputes under this Contract, in accordance with the Laws and Jurisdiction of Contract.

10 We do hereby agree and shall abide the terms of tender documents/agreement, in full

Dated this..... day of..... 2026

Signature..... In the capacity of ……

.....duly authorized to sign for and on behalf of

(IN BLOCK CAPITALS).....

BSES Rajdhani Power Ltd.

ANNEXURE – II: BIDDER'S DETAILS

S. No.	Item	Description
1	**Company Name**	
2	BRPL Vendor Code (If Registered)	
3	Area of Specialization	
4	Company Founded Year	
5	Type of Company	
6	Constitution(Company Registration number)	
7	Name of Director / Mobile Number	
8	Name of other main person / Mobile Number	
9	Vendor Address	
10	Vendor Contact no	
11	Vendor Email ID	
12	No. of Manpower on payroll (Executive/Skilled/Semi-Skilled/Un-skilled)	
13	No. of Contractual Manpower (Executive/Skilled/Semi-Skilled/Un-skilled)	
14	Other Office / Factory Address	
15	ISO certification	
16	PAN	
17	PF/ESI	
18	Shop Establishment Certificate (If Applicable)	
19	Electrical License Detail (If Applicable)	
20	GST	
21	GST Registration Date	
22	SSI	
23	MSME Registration Number (If Applicable)	
24	Turn Over FY 2022-23 (Rs. Cr.)	
25	Turn Over FY 2023-24 (Rs. Cr.)	

BSES

BSES Rajdhani Power Ltd.

S.No.	Item	Description
26	Turn Over FY 2024-25 (Rs. Cr.)	
27	Profit after Tax FY 2022-23 (Rs. Cr.)	
28	Profit after Tax FY 2023-24 (Rs. Cr.)	
29	Profit after Tax FY 2024-25 (Rs. Cr.)	
30	Net worth (Rs Cr.)	
31	Bank Guarantee Limit (in Cr.)	
32	Over Draft/Cash Credit Limit (in Cr.)	
33	Present Order Booking (Rs Cr.)	
34	Order executed with Reliance ADA (Rs Cr.)	
35	Name & Detail of relative working in BRPL	
36	Main Customer	
37	Details of orders executed / Under Execution	Please submit the details in Attachment - A

BSES

BSES

BSES Rajdhani Power Ltd.

ATTACHMENT – A

Reference List of Order Executed / under Execution by the Vendor (M/s ……)

A) Major Orders Executed

SN	Name of Project	Client name & address	Client contact Detail (Person name, e-mail ID, Mobile & landline number)	Vendor's Scope of Work	Date Of Award	Value of Work (Rs in Lakhs)	Completion date as par Order	Actual Completion Date	LD / Penalty imposed, if any (Rs in Lakhs)	Litigation / Arbitration (Y/N) (If Yes, furnish details)	Remarks
1.											
2.											
3.											
4.											
5.											

B) Orders Under Execution

SN	Name of Project	Client name & address	Client contact Detail (Person name, e-mail ID, Mobile & landline number)	Vendor's Scope of Work	Date Of Award	Value of Work (Rs in Lakhs)	Completion date as par Order	Actual Completion Date	LD / Penalty imposed, if any (Rs in Lakhs)	Litigation / Arbitration (Y/N) (If Yes, furnish details)	Remarks
1.											
2.											

BSES

3.											
4.											
5.											

BSES

BSES Rajdhani Power Ltd.

ANNEXURE – III :ACCEPTANCE FORM FOR PARTICIPATION IN REVERSE AUCTION EVENT

(To be signed and stamped by the bidder prior to participation in the auction event)

BRPL intends to use the reverse auction through SAP-SRM tool as an integral part of the entire tendering process. All the bidders who are found as techno commercially qualified based on the tender requirements shall be eligible to participate in the reverse auction event.

The following terms and conditions are deemed as accepted by the bidder on participation in the bid event:

1. BRPL shall provide the user id and password to the authorized representative of the bidder. (Authorization letter in lieu of the same be submitted along with the signed and stamped acceptance form)
2. BRPL will make every effort to make the bid process transparent. However, the award decision by BRPL would be final and binding on the supplier/Contractor.
3. The bidder agrees to non-disclosure of trade information regarding the purchase, identity of BRPL, bid process, bid technology, bid documentation and bid details.
4. The bidder is advised to understand the auto bid process to safeguard themselves against any possibility of non-participation in the auction event.
5. In case of bidding through internet medium, bidders are further advised to ensure availability of the entire infrastructure as required at their end to participate in the auction event. Inability to bid due to telephone line glitch, internet response issues, software or hardware hangs; power failure or any other reason shall not be the responsibility of BRPL.
6. In case of intranet medium, BRPL shall provide the infrastructure to bidders, further, BRPL has sole discretion to extend or restart the auction event in case of any glitches in infrastructure observed which has restricted the bidders to submit the bids to ensure fair & transparent competitive bidding. In case of an auction event is restarted, the best bid as already available in the system shall become the start price for the new auction.
7. In case the bidder fails to participate in the auction event due any reason whatsoever, it shall be presumed that the bidder has no further discounts to offer and the initial bid as submitted by the bidder as a part of the tender shall be considered as the bidder's final no regret offer. Any offline price bids received from a bidder in lieu of non-participation in the auction event shall be out rightly rejected by BRPL.
8. The bidder shall be prepared with competitive price quotes on the day of the bidding event.
9. The prices as quoted by the bidder during the auction event shall be inclusive of all the applicable taxes, duties and levies and shall be FOR at BRPL site.
10. The prices submitted by a bidder during the auction event shall be binding on the bidder. No further communication will be there.
11. No requests for time extension of the auction event shall be considered by BRPL.
12. The original price bids of the bidders shall be reduced on pro-data basis against each line item based on the final all-inclusive prices offered during conclusion of the auction event for arriving at contract amount.

For……

Signature:

Name:

Designation:

BSES

BSES Rajdhani Power Ltd.

ANNEXURE – IV: ENVIRONMENTAL, OCCUPATIONAL HEALTH & SAFETY CONDITIONS OFCONTRACT

1.0 General Requirements

1.1 The contractor shall ensure that safety of all the workers, materials, Installation and equipment's belonging to him or to others and working at the site is ensured through effective and practicable safety management systems.

1.2 The contractor shall be responsible for compliance to provisions of all safety requirements under various notices, acts, rules and relevant applicable legislations.

1.3 The contractors shall comply with all health & safety requirements as deemed necessary by BRPL from time to time.

1.4 Works shall be carried out by the contractor after taking necessary "Permit to work". Also the work shall not be carried out without use of Protective equipment's like shoes, safety belts, helmets etc. adhering to safety compliance.

1.5 All the equipment's being used shall be timely calibrated and a copy of the same shall be submitted to Safety Department within 4 weeks of the acceptance of contact and thereafter on every renewal.

2.0 EHS Policy

The contractor as per requirement of CEA Measures Relating to Safety and Electric Supply Regulations, 2010 shall follow the Environment, Health & Safety policy of BRPL. The contractor shall implement quality, health & safety management systems in accordance to BRPL EHS policy and ensure that intentions of such policy are met.

3.0 Health & Safety Plan

3.1 Within 4 weeks of the notification of acceptance of the tender, the contractor shall submit a detailed and comprehensive Contract specific health & safety plan incorporating HIRA (Hazard Identification & Risk Analysis) to BRPL. This plan shall necessarily include detailed policies, procedures, method statement for each activity to be performed and regulations which, when implemented, will ensure compliance of the contract provisions stated herewith.

3.2 The contractor shall submit health & safety plan for such activities required to be carried out under the awarded contract as deemed necessary by BRPL.

3.3 Health & safety plans, procedures, method statements, etc. developed & submitted by contractors shall be reviewed and approved by designated authorities of BRPL (Head Safety). First cut of the plan shall be submitted to Safety Department within 2 weeks of agreement of contract. After suggested rectification, the final plan shall be submitted to Head Safety not later than 4 weeks of the agreement of contract. A copy of the same shall be given to the engineer in charge also. The document shall carry the signatures of the authorized signatory (the person who has signed the agreement document of contract).

3.4 The health & safety plans, procedures, method statements, etc. shall not be changed without prior review and approval by designated authorities of BRPL.

4.0 OHS Organization & Responsibility

4.1 The contractor supervisor will play the role of safety supervisor. The safety supervisor shall hold a diploma degree from a recognized institute or university as per CEA Regulations, 2010. Also simultaneously contractor has to ensure their competency in safety or EHS with 40 hours training from reputed agency (like RLI/Allied Boston/ National Safety Council) or trainer, which should be verified earlier by BRPL safety department accordingly. The copy of training certificate shall be submitted to Safety Department within 4 weeks of agreement of contract. Time extension may be given in extraordinary situation subjected to submission of any convincing document carrying valid proof of near future plan of the training.

4.2 The training certificate should not be more than one-year-old.

4.3 Apart from above, as an owner of the company the contractor & their other key persons are also responsible for safety compliance and related issues.

5.0 First Day at Work –Induction Training and Issuance of ID-Card

5.1 The contractor shall ensure that all his workers have under gone the safety induction and have been issued with a valid ID card prior to start work at BRPL site. The proof of the same shall be submitted to Safety Department within 4 weeks of agreement of contract.

5.2 All contractor workers shall undergo above as per the BRPL site specific procedure issued from time to time.

5.3 The contractor shall ensure that no worker is in any O&M activities until the valid ID card is issued and the same is available by each worker at site including that of sub-contractor(s).

5.4 In case any worker lost the ID card issued to him, the contractor shall ensure that such incidences are promptly reported to BRPL and duplicate or new ID card is issued immediately after completing formalities as deemed necessary by BRPL.

6.0 Provision of Safe Working Conditions

6.1 Proper barricading shall be created during height work, cable laying work, working on pole, etc. Dimensions of barricading while cable laying work- Height- 2 mtr, Length- 1.5 mtr. There shall not be any gap in between two barricades. LED Bacon light shall be placed at 1st and every 4th barricade. However, while working on pole during supply maintenance work there should be a barricading cone and caution tape . In narrow lanes, where proper barricading as per rules is not possible, use barricading as per the approval of respective safety circle head in writing and copy forwarded to safety and uploading in QMS.

6.2 **PPE' Requirement**

6.2.1 The contractor shall ensure all the required PPEs given in clause 6.2 and shall allow their workers to start work at site only after proper verification of adequacy of safety gears/PPE required for the specific job at site by the Safety personnel/Site Engineer of BRPL.

Contractor has to ensure the quantity and quality of PPEs during procurement and continuous usage of following PPE's by his staff.

S.NO.	NAME OF THE PPEs	LINEMAN / FITTER/SKILLED	HELPER/UNSKILLED	SUPERVISOR
1	SAFETY HELMET	✓	✓	✓
2	FULL BODY HARNESS (POSITIONING BELT)	✓	X	X
3	ELECTRICAL HAND GLOVES	✓	✓	X
4	SAFETY SHOES	✓	✓	✓
5	SAFETY GOGGLES	✓	✓	✓
6	REFLECTIVE JACKET	✓	✓	✓

6.2.2 Contractor has to ensure for proper procurement and distribution of required PPE's among their workers with receiving in attached format (Appendix-3) which will be verified by the safety department during inspection. The entire issuance format duly signed by individual worker and to be verified/ certified by Department Head and the same need to be submitted to Safety Department along with mentioned certificates within 4 weeks of agreement of contract. The sample of the PPE's is being procured by the contractor shall be submitted and approved from the Safety Department beforehand.

6.2.3 The contractor has to provide 3 arc protection face shields in each zone (2 for complaint team and 1 for maintenance team) as per specifications mentioned in clause 6.2.5.6.

6.2.4 If any of the contractor staff found without PPEs, the said PPE's will be issued to them from BRPL store with immediate effect. And the 20% extra amount with procurement cost will be recovered from their next monthly bill cycle.

Note: PPEs shall strictly be as per the brand mentioned in clause 6.2.5

6.2.5 **Technical Specification of the PPEs**

6.2.5.1. Safety Shoes – With Composite / Fiber toes (CE approved / IS 15298) – Mandatory for all personnel working at BRPL O&M. The safety shoes shall meet the following features:

1. Electric Shock Resistant Sole
2. Impact Resistant
3. Scrap/Heat Resistant
4. Slip Resistant
5. Oil and Acid Resistant
6. Rubber PU Sole
7. Anti-puncture

Lead MAKE: BATA/HONEYWELL/KARAM

6.2.5.2 Safety Helmets: (IS 2925 - 1984 or DGMS) with chin strap – Mandatory for all personnel working at BRPL O&M. The specification of safety helmet shall be as given below:

V-GARD HDPE Yellow With 4 Point FasTrac Ratchet Suspension

Shell Material	UV stabilizedHDPE, Non vented
Suspension	• With 4 Point FasTrac Ratchet Suspension sewn headband • Textile straps made from polyester Suspension • point fixing: good positioning, ...stability, better air circulation due to ...limited contact areas with the head • Easy clean sweatband
Size	52-62 cm
Accessory slot	Standard 30 mm with removable HDPE dead plugs suitable to leak proof fitting
Approvals	ANSI/ IEC Z89.1 Class E (electrical)
Additional	Low temperature -10°C (acc. to GB2811), High temperature +50°C
Colours	Yellow
weight	360 g

BSES

Lead MAKE: 3M / KARAM / UFS

6.2.5.3 Full Body positioning Harness: (CE approved / IS 3521 / EN 361 / EN 355) – Shall be used while work is in progress at height more than 1.8 meter or where from a person may fall and get injured. The specification of the Full body harness shall be as given below:

Anchorage	AdjustabletwochestattachmentD-rings and A dorsal attachmentD-ring
Adaptability	Adjustable shoulder and thigh straps
Convenience	Shoulder and thigh straps differentiated by a dual color scheme.
Ergonomics	Idealy. Positioned sit strap for extended comfort.
Size	Standard
weight	1200GMS
ENERGY ABSORBING FORKED LANYARDS :	
Spec.	44mm wide polyamide webbing.
Length	1.5 Meter

There should not be any metallic part in the full body harness.

Lead MAKE: KARAM /LIFEGEAR/UFS/HONEYWELL

6.2.5.4 **Flex Chem Full View Safety Goggles** – Shall be used to protect workers eyes from foreign materials and flying particles. Mandatory for all personnel working at BRPL O&M. Safety goggles shall meet the following feature:

1. Acetate lens for special applications requiring superior chemical resistance.
2. Industrial version of tough and popular first responder goggles.
3. Soft Flex low profile frosted frame for increased comfort.
4. Comfortable headband with length adjustment.
5. Indirect venting for comfortable, long lasting wear can be worn with safety helmets and over prescription spectacles.
6. Sight Gard + premium anti-fog coating (EN 166 "N") with good anti- scratch properties.

Technical Specification:

Weight	95g.
Lens thickness	1.0mm
Overall width	173mm
Overall length	90mm
Bridge	47.6mm
Lens base	5.5 curve

Lens size	86.1mm verticle, 174mm diagonal
Headband	Adjustable length at max.440mm(long enough to fit together with helmets)
Material & colors	
Lens	Acetate clear, coating, Sightgard + anti-fog according to EN 166 "N" & anti scratch.
Body	PVC smoke
Headband holder	Nylon
Headband	Adjustable grey elastic fixed on frame side parts
Marking / Approvals	
Standard number	EN 166
Frame marking	MSA EN 166 34-FT CE
Lens marking	2C-1.2 MSA 1 FT N CE
Filter class	2C (Ultra violet radiation with enhanced color recognition)
Scale number	1.2: luminous trasmittance-89%
Optical class	1 (best class, for permanent wear)
Mechanical resistance	F (low energy impact 45m/s) T (at extreme temperature -5 to +55^0 C)
Resistance to	N(distorted vision due to lens fogging)
UV filter	99.9%
Ordering information	10145578-FlexiChem Sightgard + clear , 6x

Lead MAKE: MSA / UVEX/ UFS/3M/KARAM

6.2.5.5 Electrical Insulating Hand Gloves – Shall be used to prevent electric shock based upon the hazards/risks involved in a particular activity. Safety goggles shall meet the following features:

- Breakthrough manufacturing process for exception dry grip.
- Soft and flexible for enhanced tactility, high dexterity and wearer comfort.
- Ergonomic design featuring tapered fingers to reduce hand fatigue.
- Relaxed wrist for easy on/off.

	For LT work	**For HT work**
Length	360mm	360mm
Class	2	0
Thickness	3.6mm	1mm
Proof test voltage	20000	5000
Maximum use voltage	11000	1000

Tensile strength	>16mpa[Mega Pascal]
Puncture resistance	>18N/mm [Newton per mili meter]
Elongation at break	>600% [Stretching length]
Tension set	<15%

- It should be resistant to oil, acid, ultra violet rays and very low temperature.
- Each pair of glove should be marked with class, category, month & year of manufacturing, CE logo, batch no. and certified laboratory no.
- EN certified to electrical and thermal hazards,
- EN certified to thermal & electrical hazards to confirm EN 60-903,
- EN certified to mechanical hazard to EN-388
  Lead MAKE: Honeywell / ANSELL/CATU

6.2.5.6 Arc Protection Face Shield

a) ATPV value is 10 cal/cm2

b) It shall have a slotted hard hat and chin guard

c) Visible light transmission (VLT) shall be 70%

d) It should have anti fog lens

e) It should have a provision for replacement of lens and brackets.

f) It should cover the complete face and the complete neck region.

g) It must not hinder the work. Must be comfortable for the height jobs as well as in the ground.

h) Carry bag for the kit.

Lead MAKE: Oberon/Honeywell

6.2.5.7 Certificates required for all PPEs:

1. Manufacturer Certificate
2. Test Certificate
3. Authorization of Dealership/Distribution ship

The copy of all the certificates shall be submitted to safety department within 4 weeks of agreement of contract.

7.0 Integrated Management System & Audits

7.1 The Contractor shall work in the framework of Integrated Management System (IMS) and shall maintain documentation as prescribed in the IMS Manual of BRPL. IMS Manual can be obtained directly from site engineer/Division Head/Respective Head.

7.2 All contractors during their currency of contract shall strive to continuously improve and demonstrate strict compliance to ISO 9001, 14001 & 45001 standards of BRPL.

7.3 To verify compliance and to continually improve the management system, all contractors shall be subjected to both internal & external audits.

8.0 Medical Examination

8.1 The contractor shall arrange a medical examination of all his employees including his sub-contractor employees like lineman, ALM, supervisor, Fitter, welders, gas cutters, drivers and all

the workers supposed to work at height (and any other trade specified deemed necessary by BRPL at the time of deployment then annually) before employing, after illness or injury, if it appears that the illness or injury might have affected his fitness and, thereafter, once in every year as per the provisions of applicable laws or as prescribed by BRPL with proper record.

8.2 Records of medical examination as described above shall be maintained at the contractor premises and a copy of the same shall be submitted to Safety Department within 4 weeks of agreement of contract.

8.3 No person about whom the Contractor knows or has reason to believe that he is a deaf or he has a defective vision or he has a tendency to giddiness shall be required or allowed to work in any O&M operation or other construction work which is likely to involve a risk of any accident either to the worker himself or to any other person.

9.0 Working at Height

9.1 The Contractor shall ensure that all works carried out at a height of 2 Meter or more shall only be started after obtaining a permit to work at height, which shall be issued as per the procedure of BRPL by authorized personnel.

9.2 The contractor shall ensure that all control measures mentioned and agreed through above work permit or as deemed necessary by BRPL are enforced and complied all the time during activities carried out at height.

9.3 Full body harness and ladder along with the required PPEs shall be used during height work.

9.4 Barricading cone and tape shall be used along with creation of proper safety zone.

10.0 Reporting of Near Miss/ Incidents / Dangerous Occurrences

10.1 In case of any incident/ accident occurs during the O&M activities undertaken by the Contractor thereby causing a dangerous occurrence or near miss or any minor or major or fatal injury to his employees due to any reason, whatsoever, it shall be sole responsibility of the Contractor to promptly inform the same to Department Head in prescribed form and also to all authorities envisaged under the applicable laws.

11.0 Suspension of Work

11.1 BRPL shall have the right at its sole discretion to suspend the work till compliance of safety norms, if in its opinion the work is being carried out in such a way that it may cause accidents and endanger the safety of the persons and / or property, and / or equipments.

11.2 In such cases, the contractor shall be informed in writing about the nature of hazards and possible injury /accident and he shall comply to remove all shortcomings promptly. Decision of BRPL shall be conclusive and binding on the Contractor in such aspects.

11.3 The contractor shall not be entitled to damages / compensation for suspending of work due to safety reasons and the period of such stoppage of work will not be taken as an extension of time for completion of the facilities as per the work order and will not be the ground for wavier of levy of liquidated damages.

11.4 The contractor shall follow and comply with all safety Rules of BRPL, relevant provisions of applicable laws pertaining to the safety of workmen, employees plant and equipment as may be prescribed from time to time without any demur, protest or contest or reservation. In case of any nonconformity between statutory requirement and safety rules of the BRPL referred above, the latter shall be binding on the contractor unless the statutory provisions are more stringent.

12.0 OHS Appreciation Policy

12.1 If the contractor observes all the safety rules and codes, statutory laws and rules during the period of the contract awarded by the BRPL and no accident occurs then BRPL may consider the

performance of the contractor and safety score card will be prepared. The best contractor will be appreciated by suitable "SAFETY AWARD" as per scheme as may be announced separately from time to time.

13.0 Safety Motivational Scheme for Contractor Employee

13.1 All contractors must reward their employee monthly for best worker in term of complying safety norms. They should honour with a gift of Rs. 500/- (five Hundred) with commendation certificate to motivate others towards safety compliance. The record with photograph should kept with them & also to be submitted to BRPL safety department. Contractor may ask to BRPL safety people for their presence during awarding time.

13.2 All contractors have to observe safety day/ week on 4th March to 10th march every year with proper planning and record to create safety awareness inside their organization. A detailed report of observing the same to be forwarded to safety department every year.

14.0 Guidelines for Penalty Policy Implementation

14.1 Total penalty shall be calculated by multiplying the number of safety violations and the penalty amount specified for such violations in **Appendix - 1. (Example – If at first offence persons are found working without safety helmet at 3 locations, the penalty would be 3X2000 = Rs.6000/-)**

14.2 The amount of penalty can be increased or decreased based upon the seriousness of safety violations. The decision of recommending authority shall be final one.

14.3 Recommending authority shall send his factual observations to Department Head and Safety Head who in turn shall either reject or approve it. If approved, he shall send it to Finance & Accounts for execution. Finance Accounts shall execute the penalty and confirm the same & shall send it back to Department Head and Safety Head.

14.4 Recommending Authority means the Department Head, HODs, Site Safety officer / Supervisor, representatives from OHS and other personnel authorized jointly by O&M.

14.5 Penalties will be imposed for delay in submission of EHS related requirements/documents mentioned in the contract. Once the contract is accepted, the requirements as mentioned in **Appendix- 2 to be submitted within 4 weeks.**

14.5 Safety Head may impose penalty for serious violations directly.

14.6 All penalties shall be imposed directly on the concerned contractors. No penalty shall be imposed on individuals.

15.0 Guidelines for Safety Appreciation Policy Implementation

15.1 Recommending Authority shall write comments of his Appreciation in case he observes that there is no any safety violations.

15.2 Recommending Authority shall send his Safety Appreciation to Safety Head who in turn shall either approve or reject it and shall send it to Site Safety Officer for keeping in records.

15.3 Management will appreciate the Safe Contractors for their best performance towards safety norms based upon number of safety appreciation notes.

15.4 Every year best Safe Contractor shall be suitably awarded. The contractor shall be selected based upon the maximum numbers of approved safety appreciation notes.

15.5 Any contractor who has received any penalty for a particular year shall not be entitled for Safe Contractor's Award irrespective of number of safety appreciation notes he has received.

15.6 Site Safety Officer will maintain the contractor wise record of penalty & safety appreciation notes and declare the results latest by 28th February of every year for the performance of previous year.

15.7 BRPL Management shall present a Trophy with commendation certificate of safety excellence every year on the occasion of 4th to 10th March (National Safety Day) to the contractor, who qualified the safety standard criteria.

BSES

Appendix – 1

Penalty Policy on Safety Violation

	Type of Offense	Penalty Detail	Execution Channel

A	Not Wearing Safety Helmets Safety shoes/ Safety Goggles / Electrical insulating hand gloves/ reflective jacket/Not using electrically safe tools and equipments. (Poor quality or damaged item means noncompliance)	# First Offence - Warning Note & Rs.2000/- # Second Offence - Warning Note & Fine of Rs.5000/- # Third Offence- Note of recommendation of the concerned workmen/ supervisors for removal from deployment with BRPL& Fine of Rs.15000/-	Recommendation by OHS-Representative/Department Head Approval by Safety Head Deduction by Finance & Account
B	Not wearing Full Body Harness/fall arresters while working at a height more than 1.8 meter or where from a person may fall. Not using Safety Net to arrest falling objects and personnel. Not using Arc Protection Face Shield Not using barricading cone and tape. (Poor quality or damaged item means noncompliance)	# First Offence -Warning Note & Fine of Rs.5000/- # Second Offence - Warning Note for dismissal and a Fine of Rs.10000/- # Third Offense - -Action for the concerned Workmen/ supervisor for removal from deployment with BRPLand a fine of Rs.25000/-	Recommendation by OHS-Representative/Department Head Approval by Safety Head Deduction by Finance & Account
C	Any other unsafe work practices or condition which is considered having potential for fatality or injury to personnel.	# First Offence - Warning Note & Fine of Rs.10000/- # Second Offence - Action for the concerned workmen/ supervisors for removal from deployment with BRPL and fine of Rs.20000/-.	Recommendation by OHS-Representative/Department Head Approval by Safety Head Deduction by Finance & Account

Notes:

Refer clause No. 14 for penalty policy implementation guidelines

If there are 03 violations by an individual employee, his removal from deployment with BRPL # If there are 10 violations in one quarter, will be recommended for termination of contract order.

Appendix – 2

Penalty Policy on non- submission of EHS related requirements

Following EHS related requirements to be submitted within 4 weeks of agreement of contract		
Requirement	**Penalty Detail**	**Execution Channel**
1. Contract specific health & safety plan and HIRA (Hazard Identification & Risk Analysis) 2. Safety supervisor training records on EHS (40 hrs training) 3. Submission of sample of PPE's in EHS department for approval (if procured by the contractor) 4. Bills/challan of PPE's along with test certificates (if procured by the contractor) 5. PPE's receipt by worker (as per Appendix-3) 6. Medical examination record of workers 7. ID card of workers 8. Calibration Certificates of equipment's	Delay of 15 days- Warning Note & Consolidated Fine of Rs.5000/- on non-submission of proof of any of these mentioned 8 types of documents On every subsequent delay of 15 days- Warning Note & Consolidated Fine of Rs. 10,000/- on non-submission of proof of any of these mentioned 8 types of documents	Recommendation by OHS-Representative Approval by Safety Head Deduction by Finance & Account

FORMAT – 4.1

EMD BANK GUARANTEE

(To be issued in a Non Judicial Stamp Paper of Rs.100/-purchased in the name of the bank)

BSES

BSES

BSES Rajdhani Power Ltd.

Whereas [name of the Bidder] (herein after called the "Bidder") has submitted its bid dated[date of submission of bid] for the supply/services of [name and/or description of the goods/sevices] (here after called the "Bid"). KNOW ALL PEOPLE by these presents that WE [name of bank] at [Branch Name and address],having our registered office at[address of the registered office of the bank](herein after called the "Bank"),are bound unto BSES RAJDHANI Power Ltd., with its Corporate Office at BSES Bhawan, Nehru Place, New Delhi - 110019 ,(herein after called —the "Purchaser")in the sum of …….. (Rupees …….. only) for which payment well and truly to be made to the said Purchaser, the Bank binds itself, its successors, and assigns by these presents. Sealed with the Common Seal of the said Bank this_____ day of_____ 2026. The Conditions of this obligation are:

1. If the Bidder withdraws its Bid during the period of bid validity specified by the Bidder on the Bid Form;

or

2. If the Bidder, having been notified of the acceptance of its Bid by the Purchaser during the period of bid validity:

(a) Fails or refuses to execute the contract form, if required: or

(b) Fails or refuses to furnish the performance security, In accordance with the instructions to Bidders/Terms and Conditions.

We undertake to pay to the Purchaser up to the above amount upon receipt of its first written demand, without the Purchaser having to substantiate its demand, provided that is its demand the purchaser will note that amount claimed by it is due to it, owing to the occurrence of one or both of the two condition(s), specifying the occurred condition or condition(s). This guarantee will remain in force up to and including 180 days after the due date of submission bid, and any demand in respect thereof should reach the Bank not later than the above date.

(Stamp & signature of the bank)

Signature of the witness(s)

BSES

BSES Rajdhani Power Ltd.

FORMAT – 4.2

PROFORMA OF CONTRACT CUM PERFORMANCE BANK GUARANTEE

(TO BE ISSUED ON RS 100/- STAMP PAPER)

This Guarantee made at _____ this [___] day of [____] 2026

1. WHEREAS **M/s BSES Rajdhani Power Limited**, a Company incorporated under the provisions of Companies Act, 1956 having its Registered Office at **BSES Bhawan, Nehru Place, New Delhi - 110019**, India hereinafter referred to as the "Company", (which expression shall unless repugnant to the context or meaning thereof include its successors, administrators, executors and assigns).

2. AND WHEREAS the Company has entered into a contract for _____ (Please specify the nature of contract here) vide Contract No. _____dated _____ (hereinafter referred to as the "Contract") with M/s._____, (hereinafter referred to as "Contractor", which expression shall unless repugnant to the context or meaning thereof be deemed to mean and include each of their respective successors and assigns) for providing services on the terms and conditions as more particularly detailed therein.

3. AND WHEREAS as per clause ____of General Conditions of Contract, the Contractor is obliged to provide to the Company an unconditional bank guarantee for an amount equivalent to ten percent (10%) of the total Contract Value for the timely completion and faithful and successful execution of the Contract from [_____] pl. specify the name of Bank) having its head/registered office at [_____] through its branch in _____(pl. specify the name of Branch through which B.G is issued) hereinafter referred to as "the Bank", (which expression shall unless it be repugnant to the context or meaning thereof be deemed to include its successors and permitted assigns).

4. NOW THEREFORE, in consideration inter alia of the Company granting the Contractor the Contract, the Bank hereby unconditionally and irrevocably guarantees and undertakes, on a written demand, to immediately pay to the Company any amount so demanded (by way of one or more claims) not exceeding in the aggregate [Rs.]……(in words) without any demur, reservation, contest or protest and/or without reference to the Contractor and without the Company needing to provide or show to the Bank ,grounds or reasons or give any justification for such demand for the sum/s demanded.

5. The decision of the Company to invoke this Guarantee and as to whether the Contractor has not performed its obligations under the Contract shall be binding on the Bank. The Bank acknowledges that any such demand by the Company of the amounts payable by the Bank to the Company shall be final, binding and conclusive evidence in respect of the amounts payable by the Supplier to the Owner. Any such demand made by the Owner on the Bank shall be conclusive and binding, notwithstanding any difference between the Owner and the Contractor or any dispute raised, invoked, threatened or pending before any court, tribunal, arbitrator or any other authority.

6. The Bank also agrees that the Company at its option shall be entitled to enforce this Guarantee against the Bank as a principal debtor without proceeding against the Contractor notwithstanding any other security or other guarantee that the Companymay have in relation to the Contractor's liabilities.

7. The Bank hereby waives the necessity for the Company first demanding the aforesaid amounts or any part thereof from the Contractor before making payment to the Company and further also waives any right the Bank may have of first requiring the Company to use its legal remedies against the Contractor, before presenting any written demand to the Bank for payment under this Guarantee.

8. The Bank's obligations under this Guarantee shall not be reduced by reason of any partial performance of the Contract. The Bank's obligations shall not be reduced by any failure by the Company to timely pay or perform any of its obligations under the Contract.

9. The Bank further unconditionally and unequivocally agrees with the Company that the Company shall be at liberty, without the Bank's consent and without affecting in any manner its rights and the Bank's obligation under this Guarantee, from time to time, to:

(i) Vary and/or modify any of the terms and conditions of the Contract;

(ii) Forebear or enforce any of the rights exercisable by the Company against the Contractor under the terms and conditions of the Contract; or

(iii) Extend and/or postpone the time for performance of the obligations of the Contractor under the Contract;

and the Bank shall not be relieved from its liability by reason of any such act or omission on the part of the Company or any indulgence shown by the Company to the Contractor or any other reason whatsoever which under the law relating to sureties would, but for this provision, have the effect of relieving the Bank of its obligations under this Guarantee.

10. This Guarantee shall be a continuing bank guarantee and shall not be discharged by any change in the constitution or composition of the Contractor, and this Guarantee shall not be affected or discharged by the liquidation, winding-up, bankruptcy, reorganization, dissolution or insolvency of the Contractor or any of them or any other circumstances whatsoever.

11. This Guarantee shall be in addition to and not in substitution or in derogation of any other security held by the Company to secure the performance of the obligations of the Contractor under the Contract.

12. NOTWITHSTANDING anything herein above contained, the liability of the BANK under this Guarantee shall be restricted to _____ (insert an amount equal to ten percent (10%) of the Contract Value) and this Guarantee shall be valid and enforceable and expire on _____ (pl. specify date) or unless a suit or action to enforce a claim under this Guarantee is filed against the Bank on or before the date of expiry.

13. On termination of this Guarantee, all rights under the said Guarantee shall be forfeited and the Bank shall be relieved and discharged from all liabilities hereunder.

14. The Bank undertakes not to revoke this Guarantee during its validity except with the prior written consent of the Company and agrees that any change in the constitution of the Bank or the Contractor shall not discharge our liability hereunder.

15. Company may assign this Guarantee to any Person or body whether natural, incorporated or otherwise under intimation to the Bank. The Bank shall be discharged of its obligations hereunder by performance in accordance with the terms hereof to such assignee without verifying the validity / legality / enforceability of the assignment.

16. This Guarantee shall be governed by the laws of India. Any suit, action, or other proceeding arising out of, connected with, or related to this Guarantee or the subject matter hereof shall be subject to the exclusive jurisdiction of the courts of Delhi, India.

Dated this ……. day of …….. …2026 at ……..

BSES

BSES

BSES Rajdhani Power Ltd.

(Signature)

.....

(Name)

.....

(Designation with Bank Stamp)

Attorney as per

Power of Attorney No.....

Date.....

Beneficiary's bank detail with IFSC Code:

Beneficiary Name	: BSES Rajdhani Power Limited
Bank Name	: State Bank of India
A/c No.	: 40214783615
IFSC Code	: SBIN0009601

Vendor has to fill this form & submit along with the PERFORMANCE BANK GUARANTEE

1. Bank Email ID----------Bank Phone No----------

2. Where to Dispatched the BG -Local Address of bank ----------

3. Where to Dispatched the BG Head Office Address ----------

BSES

BSES Rajdhani Power Ltd.

FORMAT – 4.3

NON-DISCLOSURE AGREEMENT

THIS NON-DISCLOSURE AGREEMENT ("Agreement") is made and entered into at Delhi on the ____ day of _____, 2026

By And Between

M/s BSES Rajdhani Power Limited, a company registered under the Companies Act, 1956 and having its registered office at **BSES Bhawan, Nehru Place, New Delhi - 110019** (hereinafter referred to as the "Disclosing Party" which expression shall unless repugnant to the meaning and context mean and include its successors and permitted assigns) of the FIRST PART

And

_____, a company incorporated under the Companies Act, 1956 and having its registered office at _____, (hereinafter referred to as the "Receiving Party" which expression shall unless repugnant to the meaning and context mean and include its successors and permitted assigns) of the OTHER PART

Disclosing Party and Receiving Party are hereinafter individually referred to as the "Party" and collectively as the "Parties".

WHEREAS the Disclosing Party is in discussions with the Receiving Party for Security Management Services ("Project") and the Disclosing Party may in conjunction with the aforesaid disclose to the Receiving Party information relating to their businesses which is confidential and sensitive in nature and the Receiving Party is willing to undertake to restrict the use and further disclosure of the information in accordance with the terms and conditions set out herein:

1. The "Receiving Party" acknowledges and confirms the confidential and sensitive nature of all information, documents and material relating to Persons and entities which may be accused of or related to the theft of electricity which is a penal offense under the provisions of the electricity act 2003As well as the various data and tools which may be available by way of documents as well as other modes of proof("Project") (i) that may be disclosed or made available to the Receiving Party by the Disclosing Party or its employees/ representatives/ advisors/ consultants; (ii)Receiving Party may gain or gather from any source; (iii) Receiving Party may process or arrive at during the course of the Project; (iv) Receiving Party may have come across during its discussions with any person in the course of the Project; and (v) all negotiations and discussions between the Parties relating to the Project (all the information referred to above is hereinafter referred to as the "Confidential Information").
2. Confidential Information is understood to include but is not limited to information made available in written, machine recognizable, graphic or sample form including, without limitation, drawings, photographs, models, design or performance specifications, its analysis, compilations, studies, notes and all other information and data disclosed orally or visually which has been developed / is exclusive to the Disclosing Party and includes information provided in various meetings.

   Provided, however, that Confidential Information shall not include information which (a) is, or becomes, publicly known, otherwise than through a wrongful act of the Receiving Party or its representatives; (b) is in the possession of the Receiving Party prior to receipt from the Disclosing Party or its representatives without an obligation of confidentiality; (c) is independently developed by the Receiving Party, provided that it was not derived from the Confidential Information; (d) is furnished to others by the Disclosing Party without restrictions, similar to those herein on the rights of such others to use or disclose; or (e) is approved in writing by the Disclosing Party for disclosure.

3. The Receiving Party shall not disclose the Confidential Information to any other person save and except with the express consent in writing given by the Disclosing Party. The Receiving Party, however, may disclose such part of the Confidential Information where (i) such disclosure is in response to a valid order of a court or any other governmental body having jurisdiction over this Agreement or (ii) such disclosure is otherwise required by law, provided that Receiving Party has given prior written notice to the Disclosing Party forthwith it came to learn about such disclosure requirement or the demand for such for disclosure and made all reasonable efforts to protect the Confidential Information in connection with such disclosure.

4. The Receiving Party shall with reference to the Confidential Information take all actions as may be necessary to (i) maintain the confidentiality thereof; (ii) limit its use of such Confidential Information solely for the purpose of the Project; (iii) avoid disclosure even to any of its employees that are not associated with the Project; (iv)avoid any dissemination or publication by any of its employees/ representatives associated with the Project; (v) avoid writing about sensitive information which is disclosed verbally and is sensitive to the operations; and (vi) safeguard the Confidential Information from being accessed by any unauthorized person. Such actions shall include but not be limited to obtaining appropriate non-disclosure undertakings from its employees directly or indirectly engaged in the Project.

5. The Receiving Party hereby agrees to indemnify and hold harmless the Disclosing Party and its directors and employees from and against any damage, loss, cost or liability (including all expenses and costs of enforcing rights under the Agreement) arising out of or resulting from (i) any use or disclosure by the Receiving Party of Confidential Information in violation of the Agreement; (ii) any leakage of the Confidential Information at the end of the Receiving Party or its employees/ representatives; and (iii) breach or violation of any of the other covenants herein.

6. The Receiving Party will, promptly upon the request of the Disclosing Party, deliver to the Disclosing Party, the documents comprising the Confidential Information or any part thereof and will destroy any copies, notes, or extracts thereof, without retaining any copy thereof, except that any portion of the Confidential Information that consists of analysis and any written Confidential Information not so requested and returned, shall be retained and kept subject to the terms of this Agreement, or upon the Disclosing Party's request destroyed (such destruction to be confirmed in writing).

7. The term of this Agreement is 3 years from the date of execution of this Agreement. However, the obligation to maintain confidentiality of the Disclosing Party's information shall survive the termination of this Agreement. Any violation of this agreement may lead to termination of all the relations with the Receiving party and black listing/ debarring of the Agency for future engagements.

8. This Agreement shall be governed by the laws of India. Any dispute, difference or claim related to or arising under, out of or in connection with this Agreement shall be resolved subject to the jurisdiction of Delhi Courts.

For the Disclosing Party

_____
Authorized Signatory
Name:
Designation:

For the Receiving party

_____
Authorized Signatory
Name:
Designation:

BSES Rajdhani Power Ltd.

FORMAT – 4.4

NO DEVIATION DECLATATION

NO DEVIATION –A (Technical)

NIT NO & DATE:

DUE DATE OF TENDER:

We hereby accept all terms and conditions of the technical scope of work as mandated in the tender documents subject to the following deviations as mentioned against the applicable technical qualifying requirement:

S.NO.	SL.NO OF TECHNICAL SPECIFICATION/SCOPE OF WORK	DEVIATIONS, IF ANY

SIGNATURE & SEAL OF BIDDER

NAME OF BIDDER

Note-The above template is indicative only, May vary depending on the nature of procurement/value.

NO DEVIATION –B(Commercial)

NIT NO & DATE:

DUE DATE OF TENDER:

We hereby accept all terms and conditions of the commercial requirement as mandated in tender document subject to the following deviations as mentioned against the applicable commercial qualifying requirement:

S.NO.	S. NO OF COMMERCIAL REQUIREMENTS	DEVIATIONS, IF ANY

SIGNATURE & SEAL OF BIDDER

NAME OF BIDDER

Note:-It is important to explicitly include all such terms and conditions which are considered absolutely necessary to be accepted by bidder without any deviation. Tender document shall have a stipulation that deviation to such criteria shall make the bid liable for rejection.

BSES

BSES Rajdhani Power Ltd.

FORMAT – 4.5

BIDDER'S COMMUNICATION DETAILS

Bidder should furnish the below details for future communication: -

GENERAL INFORMATION	
NAME OF Company	
POSTAL ADDRESS	

FOR TECHNICAL QUERY:		
CONTACT PERSON & DESIGNATION	NAME	DESIGNATION
E-MAIL	MOBILE NO	TELEPHONE NO

FOR COMMERCIAL QUERY:		
CONTACT PERSON & DESIGNATION	NAME	DESIGNATION
E-MAIL	MOBILE NO	TELEPHONE NO

Note: No communication shall be entertained from any other email id, except as mentioned above. Bidder needs to inform the company if any changes in the email id on their letter head duly signed by the authorized signatory.

BSES

SECTION – VII: TECHNICAL SPECIFICATION

BSES

VOLUME – III

TECHNICAL SPECIFICATIONS

BSES

TECHNICAL SPECIFICATIONS OF PACKAGE-B

BSES

BSES RAJDHANI POWER LIMITED

Subject:- Shifting of 66 kV O/H Feeder from 220 kV Okhla to Malviya nagar circuit no 1 & 2 from DMRC casting Yard near Pushpa Bhawan to Khanpur T Point. for construction of DMRC corridor from G Block Saket to Lajpat Nagar.

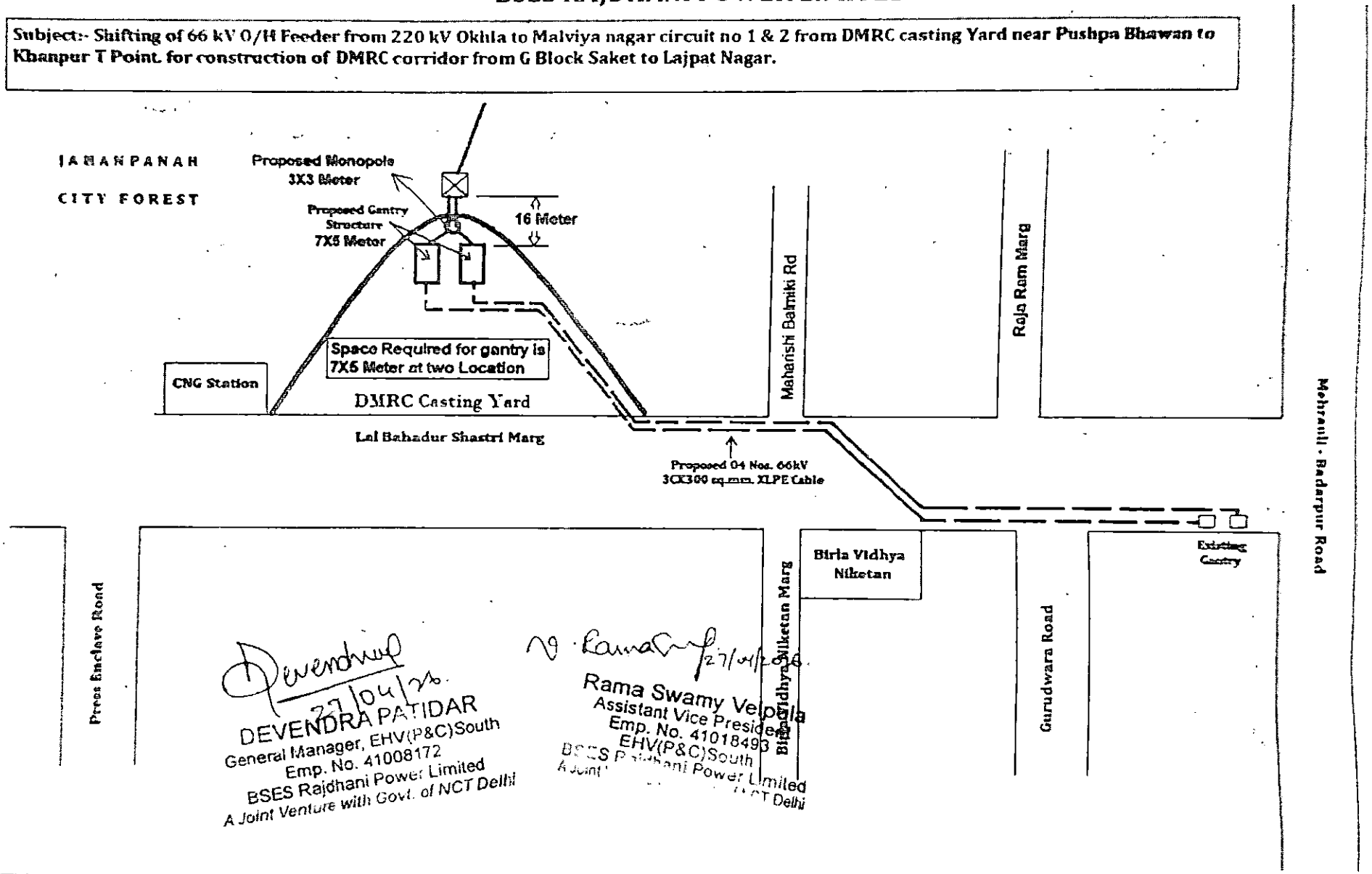

Devendra 27/04/26

DEVENDRA PATIDAR
General Manager, EHV(P&C)South
Emp. No. 41008172
BSES Rajdhani Power Limited
A Joint Venture with Govt. of NCT Delhi

V. Rama Swamy 27/04/2026

Rama Swamy Velpula
Assistant Vice President
Emp. No. 41018493
EHV(P&C)South
BSES Rajdhani Power Limited
A Joint Venture with Govt. of NCT Delhi

CONSOLIDATED TECHNICAL REQUIREMENT

FOR

SUPPLY, ERECTION, TESTING & COMMISSIONING

OF

66kV CABLE LAYING WORK (IN-FEED)

Date	Revision	Pages
21.11.2025	R0	12

Index

S. No	Title	Page no
1.00.00	**GLOSSARY LIST**	3
2.00.00	**GENERAL DESIGN CRITERIA**	4
3.00.00	**PACKAGE**	7
3.01.00	**Package – B** Scheme no-1: 02 Nos. 66KV Infeeds from 220KV Sarita Vihar Substation DTL to Molarbandh Substation BRPL by laying of 04 Nos 66KV,3CX300sq.mm. XLPE cables. Scheme no-2: Establishment of 66/11 kV GIS Substation at Vamasundari, rajokari with Infeed provision from 220kV Vasant Kunj (Double Circuit) - 4 No. 66 KV 3CX300 mm2.	
4.00.00	**TECHNICAL SPECIFICATION**	7
1.	Laying of 66kV / 33kV / 11kV / 1.1 kV grade PVC / XLPE cables	
2.	66kV 3 Core cable (66kV, 3CX300 sqmm cable), 33 kV 3Cx400 sq m	
3.	66kV Jointing Kit	
4.	66kV Termination Kit	
5	33kV and 66kV LA	
6	ACSR Conductors	
7	RFID Active and Passive Markers	
8	Chemical Earthing	
9	GI and Earthing pipe, GI strip	
10	C wedge Connectors	
11	PPE Items	
12	1.1kV Power and Control cable	
13	HDPE pipe	
14	Hardware RCC items & Steel items	
15	48 Fibre OFC cable	
5.00.00	**SCHEDULES**	8
Schedule-I	Deviation from Specification	
Schedule-II	Make of Major items	
6.00.00	**Infeed route map, SLD and Layout**	10
	Package –A	
	Package –C	
	Package –D	

1.00.00 GLOSSARY LIST

S. No.	Abbreviation	Description
1	F.O. R.	Freight On Road
2	CT	Current Transformer
3	PT	Potential Transformer
4	kV	Kilo Volts
5	MVAR	Mega Volt Amperes Reactive
6	MVA	Mega Volt Amperes
7	kVA	Kilo Volt Amperes
8	O&M	Operation and Maintenance
9	LOA	Letter of Award
10	FO	Fiber Optic
11	MCD	Municipal Corporation of Delhi
12	DDA	Delhi Development Authority
13	PWD	Public Works Department
14	U/G	Underground
15	HT	High Tension
16	ACSR	Aluminum Conductor Steel Reinforced
17	BOQ	Bill of Quantity
18	GA	General Arrangement
19	RCC	Reinforced Cement Concrete
20	CPRI	Central Power Research Institute
21	ERDA	Electrical Research and Development Association
22	CRP	Control &Relay Panel
23	T&P	Tools & Plant
24	IR	Insulation Resistance
25	OFC	Optical Fiber Cable
26	GAIL	Gas Authority of India Limited
27	IGL	Indraprastha Gas Limited
28	IOCL	Indian Oil Corporation Limited
29	DMRC	Delhi Metro Rail Corporation
30	PPE	Personal Protective Equipment
31	FRLS	Fire Retardant Low Smoke
32	GI	Galvanized Iron
33	GPR	Ground Penetration Radar
34	P/L	Providing and laying
35	P/F	Providing and fixing
36	TAC	Tariff Advisory Committee
37	IS	Indian Standard
38	IEC	International Electro technical Commission

2.00.00 GENERAL DESIGN CRITERIA

2.01.00 General Service condition

a) Maximum ambient temperature (Degree C): 50

b) Minimum ambient temperature (Degree C): 0

c) Relative Humidity (%): 100

d) Maximum annual rainfall (mm): 750

e) Maximum wind pressure (Kg/Sq.m): 150

f) Maximum Altitude above mean sea level (Meters): 1000

g) Seismic level Zone IV as per IS 1893

h) Pollution Level: Heavy/Dry

2.02.00 Code and Standards

Contractor shall follow latest Indian Standards or International Standards. Refer respective equipments specification for applicable standards.

2.03.00 Scope and Services

S.No.	Head	BRPL Scope	Contractor's Scope	Remarks
1	Road Cutting Permission	X	√	Statutory fees will be borne by BRPL
2	Supply, Laying, testing and commissioning of 66kV cable , Cable Jointing , Cable termination including laying , testing and commissioning of OFC joint and OFC termination.	X	√	NA
3	Supply, Laying, testing and commissioning of 33kV Bay consisting 33kV Circuit breaker, 33kV Isolator, 33kV CT & PT, 33kV LA, Bay marshalling kiosk etc.	X	√	NA
4	Permissions from relevant External and Internal Agencies regarding Cable Laying and Commissioning (Traffic Police, GAIL, IGL, IOCL, PWD, CPWD, Pollution Control Board, DMRC, Electrical inspector etc.)	X	√	Statutory fees will be borne by BRPL
5	Supply, Erection, Testing and commissioning of Equipments related to schemes like CT, CVT, CB, Isolator, LA etc. if any.	X	√	As per specifications and Standards
6	Supply and Erection of structure for mounting equipments in the bay like structure for CT, CVT, CB, Isolator, LA etc.	X	√	
7	GPR/Scanning of the whole route (before execution of project and after completion of project) shall be done and the same shall be submitted to BRPL.	X	√	This work shall be done by vendor before execution of job.

CONSOLIDATED TECHNICAL EQUIREMENT FOR SUPPLY, ERECTION, TESTING & COMMISSIONING OF 66kV CABLE LAYING WORK (IN-FEED)

S.No.	Head	BRPL Scope	Contractor's Scope	Remarks
	The report shall be submitted within 15 days after the issue of LOI HDD route depth shall be decided after submission of report			
8	• Drawing Submissions-before execution of project • As built drawing submission- after completion of project	X	√	NA
9	Engineering Approvals	√	X	NA
10	Testing Equipments	X	√	NA
11	Lighting Arrangement	X	√	NA
12	Construction Power and Construction Water	X	√	NA
13	Safety , Security and insurance of Manpower(Labour, Engineers, Supervisors etc)	X	√	Labour should be provided with every safety gear like safety jacket, helmet etc.
14	Various Tools and Tackles related to Job	X	√	NA
15	Transportation of Material and any other tender related work	X	√	NA
16	Cleanliness around project site	X	√	NA
17	Security and Safety of material until handing over the project to BRPL	X	√	NA
18	Providing of Various Machines e.g Crane, Hydra, JCB, Hammer , Cutting Machine etc to complete the project	X	√	NA
19	Providing of Trenchless Machine	X	√	NA
20	Loading and Unloading of material at site including scrap returning to BRPL site	X	√	NA
21	Electrical Inspector Clearance	X	√	Statutory fees will be borne by BRPL
22	Providing of Continuous Steel Barricading with Mobile no of project supervisor, sufficient traffic marshal, becon light, Fluorescent tape, PPE etc. (Mobile no shall be clearly visible on the barricading)	X	√	as per drawing enclosed with specification.
23	Permit to work requesting Agency in BRPL premises	X	√	Permit Should be applied to Engineer In-charge prior to work through proper procedure
24	Permit to work issuing agency inside BRPL Premises	√	X	NA
25	Temporary office and Material Store near work premises	X	√	NA

S.No.	Head	BRPL Scope	Contractor's Scope	Remarks
26	Storage of all kind of Material required for project	X	√	BRPL premises will not provide for any kind of material storage and issuance
27	Dismantling of material at project site, , Dismantled material loading, Unloading and transportation and deposit to BRPL store	X	√	Store location will be within BRPL premises
28	Preparation, updation and submission of PERT chart fortnightly to track activities	X	√	NA
29	Submission of final drawing showing layout of cable in Google map along with of cable joint location with GPS Coordinates	X	√	Approval will be done by BRPL Representative
30	Removal and renaming of existing signboard of other utilities (if any) including painting as per their actual route	X	√	Painting colour and material should be in line with the existing ones for aesthetic look
31	Surface levelling, removal and disposal of excess earth (malwa) after back filling of trench. During execution excavated earth shall be covered with green mat to prevent dust pollution. Also regular Water Sprinkling is to be required at site.	X	√	NA
32	Supply, installation, testing and commissioning of Active and Passive ball markers	X	√	NA
33	Supply & installing of RCC cable route marker, RCC cable joint marker and RCC Coffin for joint. , RCC slab, warning tape etc.	X	√	Shall be designed as per tender document
34	Cable Route Tracer and Marker-supply, testing and commissioning (as applicable)	X	√	NA
35	Sheath Integrity test before Charging of 66kV Cable	X	√	Mandatory
36	All cable drum shall be returnable basis so immediate after laying of cable, empty cable drum shall be removed away from site at their risk and cost by respective bidder from time to time in line with project progress.	X	√	

S.No.	Head	BRPL Scope	Contractor's Scope	Remarks
37	Compliance of instructions/ orders issued by National Green Tribunal/ Central Pollution Control Board/ any other agency related to pollution.	X	√	Any kind of penalty shall be borne by the vendor
38	De-watering of pits	X	√	Scope shall be covered as per execution team requirement.
39	Civil works	X	√	Any kind of civil works related to the project
40	As built drawing	X	√	Page size- A1, 4 sets (CES, TRL, P&C, with final bill)
41	Handling of non- standard drum length	X	√	
42	Route survey, preparation of site plan and profile	X	√	
43	Cross bonding design	X	√	Based on offered cable design
44	ETC including supply of materials, design, consultancy etc of bridge/truss/structure for nallah crossing	X	√	
45	SCADA	X	√	Whole work

Special requirement

1. All jointing Kit shall have “Mechanical Connector” and not “Crimping”.
2. All the joints shall be covered with RCC coffin. Coffin shall be filled with sand. Each coffin or nos. of coffin shall fully cover the joint. Drawing provided only for constructional purpose not showing complete length of coffin. Bidder has to consider coffin length or numbers such that the complete joint shall be covered.
3. Delivery of cable at site and all other associate equipments/accessories have to be aligned as per site requirement and progress.
4. All kind of structural steel shall be GI unless otherwise specified.
5. Make of all kind of materials shall be as per BRPL approved make list, no deviation shall be allowed from make list.

6. The 66kV, 3CX300 , cable is required with OFC embedded inside (OFC cable is of 48 fibre with 36 single mode and 12 multi mode). For OFC cable details please refer attached specification.
7. Depth of HDD shall be decided jointly after submission of GPR report
8. GIS kit shall be suitable for OFC embedded cable
9. Link cable for cross bonding shall be copper, 3.3KV, Size as Mentioned in BoQ

3.00.00 PACKAGE

3.01.00

Package –A

Scheme no-1: 02 Nos. 66KV Infeeds from 220KV Sarita Vihar Substation DTL to Molarbandh Substation BRPL by laying of 04 Nos 66KV,3CX300sq.mm. XLPE cables.

Scheme no-2: Establishment of 66/11 kV GIS Substation at Vamasundari, rajokari with Infeed provision from 220kV Vasant Kunj (Double Circuit) - 4 No. 66 KV 3CX300 mm2.

3.02.00 In-feed route map (attached below)

4.00.00 TECHNICAL SPECIFICATION

Please refer individual Technical Specification

5.00.00 SCHEDULES

SCHEDULE -1
TECHNICAL DEVIATION FROM THE SPECIFICATION
(This shall be part of Technical bid)

Technical deviation from specification if any, shall be listed out in below format

Sl no	Specification cl no	Deviation	Benefit to BRPL

SCHEDULE -II
BRPL APPROVED MAKE LIST OF MAJOR ITEMS

Sl no	Items Description	Approved Make

1	33kV outdoor Circuit Breaker	• ABB Ltd. • Siemens Ltd. • GE • CGPISL
2	33kV Isolator	• ABB LIMITED. • SIEMENS LIMITED. • CROMPTON GREAVES LIMITED.
3	33kV Lightning arrester	• ALSTOM • OBLUM ELECTRICAL INDUSTRIES PVT. LIMITED. • LAMCO INDUSTRIES PVT. LIMITED. • ABB LIMITED • CROMPTON GREAVES LIMITED. • ELECTROLYTE • RAYCHEM
4	33kV Control and Relay Panel	• ABB LIMITED. • SCHNEIDER ELECTRIC LIMITED. • SIEMENS LIMITED.
5	33kV outdoor CT and PT	• CROMPTON GREAVES LIMITED • KAPCO ELECTRIC PVT. LIMITED • MEHRU ELECTRICAL & MECHANICAL ENGINEERS P LIMITED • GE • BHEL • ABB Ltd.
6	33 kV/66kV Jointing and Termination KIT	• Raychem • 3M
7	HDPE Pipes	• Flow well • Tirupati • Narendra Polyplast • Flexi flow • Shivam Irrigation Works Pvt. Ltd. (Shivano) • Safal Polymer pvt ltd • Jindal Sanitations pvt ltd • Rajshree Technoplast pvt ltd.
8	Chemical Earthing	• JMV • Pragati • True Power • Genius Protection • Axis Electrical component
9	33Kv/66kV Jointing and Termination KIT	• Raychem • 3M
10	LDR (Line differential relay) Laying of cable 33 kV 2RX3CX400 SQMM from 220 kV Lodhi Road to NDSE Substation (Route Length- 5500 mtr))	Make- Schneider Model- For NDSE with 50 V DC P54321RULM0K68M

		For Lodhi Road 220 V DC P54331RULM0K68M
11	LDR (Line differential relay) Laying of 02 Nos 33kV 3CX400 sq.mm. XLPE cable from 220 kV RK Puram to R.K.Puram-1 Grid substation.	Make: Schnider / Equivalent in Alstom Model: RKP-1 Grid side – P54321RUHM0K68M -1 No for 50V DC 220kV DTL RK Puram Grid side- b) P54331RUHM0K68M -1 No for 220V DC
12	LDR for other projects	Bidders to take make and model details from BRPL before submission of price bid.

CONSOLIDATED TECHNICAL REQUIREMENT

FOR

SUPPLY, ERECTION, TESTING & COMMISSIONING

OF

66kV & 33 kV CABLE LAYING WORK (IN-FEED)

Date	Revision	Pages
10.11.2025	R0	21

Index

S. No	Title	Page no
1.00.00	**GLOSSARY LIST**	3
2.00.00	**GENERAL DESIGN CRITERIA**	4
3.00.00	**PACKAGE**	7
3.01.00	**Package – B** Scheme no-3: LILO of Vasant Kunj C Block to JNU circuit no 1 & 2 at 220 kV R K Puram by laying 12 nos 66 kV 1CX1000 SQMM XLPE Cables from 220 kV R K Puram to JNU. Scheme no-4: Estimate for Laying of 02 nos 66 kV 3Cx300MM2 XLPE Cables(S/C) for providing additional circuit from 220KV PPK-1 to Bindapur Grid (G-3) & clubbing the existing two circuits into one comprising 2X3X1CX630 sqmm XLPE cable. (Route Length-2000M) Scheme no-5: Estimate for Laying of 02 nos 66 kV 3Cx300MM2 XLPE Cables(S/C) for providing additional circuit from 220KV PPK-1 to G-2 Grid & clubbing the existing two circuits into one comprising 2X3X1CX630 sqmm XLPE cable. (Route Length-3000M) Scheme no- 6: Conversion of 66kV O/H S/C T/L from Pankha Road -Sagarpur Circuit (from pankha Road Grid to Sagarpur Grid) with Route Length - 3100M & And 66kV O/H T-off Circuit of PPk-1 to Rewari Line(Dabri Crossing to Pankha Road) by laying of 02 Nos. 66KV 3Cx300sq.mm. XLPE cable Route Length - 1400 M. Scheme no- 7A: Estimate for conversion of 33 kV D/C O/H Peeragarhi -Mukharjee ckt 1 & 2 Tower line by laying of 3Cx400 sq.mm. XLPE Cables (4 nos cable) from Tower no 1 in front of GGSH to Mukharjee Park Grid having Route length-2800 M. Scheme no- 7B: Estimate for conversion of 33 kV O/H Paschim Vihar -Mukharjee ckt 3 (T-OFF Chaukhandi) by laying of 3Cx400 sq.mm. XLPE Cables (2 nos cable) from Paschim vihar grid to keshopur metro station (Keshopur nalla) & Keshopur sabji mandi to Mukharjee park grid having route length 2000 M & 3000 M. Scheme no- 8: Conversion of 33kV O/H feeder into U/G by laying of double 33kV 3x400 sq.mm. XLPE U/G cable From Malviya Nagar to Shivalik grid.	

	Scheme no- 9 Conversion overhead to U/G of 33kV Pankha Road to Mayapuri Circuit 1 & 2 by laying of 03 nos 33 kv 3x400mm2 XLPE cable	
4.00.00	**TECHNICAL SPECIFICATION**	7
1.	Laying of 66kV / 33kV / 11kV / 1.1 kV grade PVC / XLPE cables	
2.	66kV 3 Core cable (66kV, 3CX300 sqmm cable), 33 kV 3Cx400 sq m	
3.	66kV & 33 kV Jointing Kit	
4.	66kV & 33 kVTermination Kit	
5	33kV and 66kV LA	
6	ACSR Conductors	
7	RFID Active and Passive Markers	
8	Chemical Earthing	
9	GI and Earthing pipe, GI strip	
10	C wedge Connectors	
11	PPE Items	
12	1.1kV Power and Control cable	
13	HDPE pipe	
14	Hardware RCC items & Steel items	
15	48 Fibre OFC cable	
5.00.00	**SCHEDULES**	8
Schedule-I	Deviation from Specification	
Schedule-II	Make of Major items	
6.00.00	**Infeed route map, SLD and Layout**	10
	Package –A	
	Package –C	
	Package –D	

1.00.00 GLOSSARY LIST

S. No.	Abbreviation	Description
1	F.O. R.	Freight On Road
2	CT	Current Transformer
3	PT	Potential Transformer
4	kV	Kilo Volts
5	MVAR	Mega Volt Amperes Reactive
6	MVA	Mega Volt Amperes
7	kVA	Kilo Volt Amperes
8	O&M	Operation and Maintenance
9	LOA	Letter of Award
10	FO	Fiber Optic
11	MCD	Municipal Corporation of Delhi

12	DDA	Delhi Development Authority
13	PWD	Public Works Department
14	U/G	Underground
15	HT	High Tension
16	ACSR	Aluminum Conductor Steel Reinforced
17	BOQ	Bill of Quantity
18	GA	General Arrangement
19	RCC	Reinforced Cement Concrete
20	CPRI	Central Power Research Institute
21	ERDA	Electrical Research and Development Association
22	CRP	Control &Relay Panel
23	T&P	Tools & Plant
24	IR	Insulation Resistance
25	OFC	Optical Fiber Cable
26	GAIL	Gas Authority of India Limited
27	IGL	Indraprastha Gas Limited
28	IOCL	Indian Oil Corporation Limited
29	DMRC	Delhi Metro Rail Corporation
30	PPE	Personal Protective Equipment
31	FRLS	Fire Retardant Low Smoke
32	GI	Galvanized Iron
33	GPR	Ground Penetration Radar
34	P/L	Providing and laying
35	P/F	Providing and fixing
36	TAC	Tariff Advisory Committee
37	IS	Indian Standard
38	IEC	International Electro technical Commission

2.00.00 GENERAL DESIGN CRITERIA

2.01.00 General Service condition

a) Maximum ambient temperature (Degree C): 50
b) Minimum ambient temperature (Degree C): 0
c) Relative Humidity (%): 100
d) Maximum annual rainfall (mm): 750
e) Maximum wind pressure (Kg/Sq.m): 150
f) Maximum Altitude above mean sea level (Meters): 1000
g) Seismic level Zone IV as per IS 1893
h) Pollution Level: Heavy/Dry

2.02.00 Code and Standards

Contractor shall follow latest Indian Standards or International Standards. Refer respective equipments specification for applicable standards.

2.03.00 Scope and Services

S.No.	Head	BRPL Scope	Contractor's Scope	Remarks
1	Road Cutting Permission	X	√	Statutory fees will be borne by BRPL
2	Supply, Laying, testing and commissioning of 66kV cable , Cable Jointing , Cable termination including laying , testing and commissioning of OFC joint and OFC termination.	X	√	NA
3	Supply, Laying, testing and commissioning of 33kV Bay consisting 33kV Circuit breaker, 33kV Isolator, 33kV CT & PT, 33kV LA, Bay marshalling kiosk etc.	X	√	NA
4	Permissions from relevant External and Internal Agencies regarding Cable Laying and Commissioning (Traffic Police, GAIL, IGL, IOCL, PWD, CPWD, Pollution Control Board, DMRC, Electrical inspector etc.)	X	√	Statutory fees will be borne by BRPL
5	Supply, Erection, Testing and commissioning of Equipments related to schemes like CT, CVT, CB, Isolator, LA etc. if any.	X	√	As per specifications and Standards
6	Supply and Erection of structure for mounting equipments in the bay like structure for CT, CVT, CB, Isolator, LA etc.	X	√	
7	GPR/Scanning of the whole route (before execution of project and after completion of project) shall be done and the same shall be submitted to BRPL. The report shall be submitted within 15 days after the issue of LOI HDD route depth shall be decided after submission of report	X	√	This work shall be done by vendor before execution of job.
8	• Drawing Submissions-before execution of project • As built drawing submission- after completion of project	X	√	NA
9	Engineering Approvals	√	X	NA
10	Testing Equipments	X	√	NA
11	Lighting Arrangement	X	√	NA
12	Construction Power and Construction	X	√	NA

S.No.	Head	BRPL Scope	Contractor's Scope	Remarks
	Water			
13	Safety , Security and insurance of Manpower(Labour, Engineers, Supervisors etc)	X	√	Labour should be provided with every safety gear like safety jacket, helmet etc.
14	Various Tools and Tackles related to Job	X	√	NA
15	Transportation of Material and any other tender related work	X	√	NA
16	Cleanliness around project site	X	√	NA
17	Security and Safety of material until handing over the project to BRPL	X	√	NA
18	Providing of Various Machines e.g Crane, Hydra, JCB, Hammer , Cutting Machine etc to complete the project	X	√	NA
19	Providing of Trenchless Machine	X	√	NA
20	Loading and Unloading of material at site including scrap returning to BRPL site	X	√	NA
21	Electrical Inspector Clearance	X	√	Statutory fees will be borne by BRPL
22	Providing of Continuous Steel Barricading with Mobile no of project supervisor, sufficient traffic marshal, becon light, Fluorescent tape, PPE etc. (Mobile no shall be clearly visible on the barricading)	X	√	as per drawing enclosed with specification.
23	Permit to work requesting Agency in BRPL premises	X	√	Permit Should be applied to Engineer In-charge prior to work through proper procedure
24	Permit to work issuing agency inside BRPL Premises	√	X	NA
25	Temporary office and Material Store near work premises	X	√	NA
26	Storage of all kind of Material required for project	X	√	BRPL premises will not provide for any kind of material storage and issuance
27	Dismantling of material at project site, , Dismantled material loading, Unloading and transportation and deposit to BRPL store	X	√	Store location will be within BRPL premises
28	Preparation, updation and submission of PERT chart fortnightly to track activities	X	√	NA

S.No.	Head	BRPL Scope	Contractor's Scope	Remarks
29	Submission of final drawing showing layout of cable in Google map along with of cable joint location with GPS Coordinates	X	√	Approval will be done by BRPL Representative
30	Removal and renaming of existing signboard of other utilities (if any) including painting as per their actual route	X	√	Painting colour and material should be in line with the existing ones for aesthetic look
31	Surface levelling, removal and disposal of excess earth (malwa) after back filling of trench. During execution excavated earth shall be covered with green mat to prevent dust pollution. Also regular Water Sprinkling is to be required at site.	X	√	NA
32	Supply, installation, testing and commissioning of Active and Passive ball markers	X	√	NA
33	Supply & installing of RCC cable route marker, RCC cable joint marker and RCC Coffin for joint. , RCC slab, warning tape etc.	X	√	Shall be designed as per tender document
34	Cable Route Tracer and Marker-supply, testing and commissioning (as applicable)	X	√	NA
35	Sheath Integrity test before Charging of 66kV Cable	X	√	Mandatory
36	All cable drum shall be returnable basis so immediate after laying of cable, empty cable drum shall be removed away from site at their risk and cost by respective bidder from time to time in line with project progress.	X	√	
37	Compliance of instructions/ orders issued by National Green Tribunal/ Central Pollution Control Board/ any other agency related to pollution.	X	√	Any kind of penalty shall be borne by the vendor
38	De-watering of pits	X	√	Scope shall be covered as per execution team requirement.
39	Civil works	X	√	Any kind of civil works related to the project
40	As built drawing	X	√	Page size- A1, 4 sets (CES, TRL, P&C, with final

S.No.	Head	BRPL Scope	Contractor's Scope	Remarks
				bill)
41	Handling of non- standard drum length	X	√	
42	Route survey, preparation of site plan and profile	X	√	
43	Cross bonding design	X	√	Based on offered cable design
44	ETC including supply of materials, design, consultancy etc of bridge/truss/structure for nallah crossing	X	√	
45	SCADA	X	√	Whole work

Special requirement

1. All jointing Kit shall have “Mechanical Connector” and not “Crimping”.
2. All the joints shall be covered with RCC coffin. Coffin shall be filled with sand. Each coffin or nos. of coffin shall fully cover the joint. Drawing provided only for constructional purpose not showing complete length of coffin. Bidder has to consider coffin length or numbers such that the complete joint shall be covered.
3. Delivery of cable at site and all other associate equipments/accessories have to be aligned as per site requirement and progress.
4. All kind of structural steel shall be GI unless otherwise specified.
5. Make of all kind of materials shall be as per BRPL approved make list, no deviation shall be allowed from make list.
6. The 66kV, 3CX300 , 33 kV 3C x400 sqmm cable is required with OFC embedded inside (OFC cable is of 48 fibre with 36 single mode and 12 multi mode). For OFC cable details please refer attached specification.
7. Depth of HDD shall be decided jointly after submission of GPR report
8. GIS kit shall be suitable for OFC embedded cable
9. Link cable for cross bonding shall be copper, 3.3KV, Size as Mentioned in BoQ

3.00.00 PACKAGE

3.01.00

Package –A

Scheme no-1: Estimate for Laying of 02 nos 66 kV 3Cx300MM2 XLPE Cables(S/C) for providing additional circuit from 220KV PPK-1 to Bindapur Grid & clubbing the existing two circuits into one comprising 2X3X1CX630 sqmm XLPE cable. (Route Length-2000M)

Scheme no-2: Estimate for Laying of 02 nos 66 kV 3Cx300MM2 XLPE Cables(S/C) for providing additional circuit from 220KV PPK-1 to G-2 Grid & clubbing the existing two circuits into one comprising 2X3X1CX630 sqmm XLPE cable. (Route Length-3000M)

Scheme no-3: LILO of Vasant Kunj C Block to JNU circuit no 1 & 2 at 220 kV R K Puram by laying 12 nos 66 kV 1CX1000 SQMM XLPE Cables from 220 kV R K Puram to JNU.

Scheme no- 4: Conversion of 33kV O/H feeder into U/G by laying of double 33kV 3x400 sq.mm. XLPE U/G cable From Malviya Nagar to Shivalik grid.

Scheme no- 5: Conversion overhead to U/G of 33kV Pankha Road to Mayapuri Circuit 1 & 2 by laying of 03 nos 33 kv 3x400mm2 XLPE cable

Scheme no- 6: Conversion of 66kV O/H S/C T/L from Pankha Road -Sagarpur Circuit (from pankha Road Grid to Sagarpur Grid) with Route Length - 3100M & And 66kV O/H T-off Circuit of PPk-1 to Rewari Line(Dabri Crossing to Pankha Road) by laying of 02 Nos. 66KV 3Cx300sq.mm. XLPE cable Route Length - 1400 M.

Scheme no- 7: Estimate for conversion of 33 kV O/H Paschim Vihar -Mukharjee ckt 3 (T-OFF Chaukhandi) by laying of 3Cx400 sq.mm. XLPE Cables (2 nos cable) from Paschim vihar grid to keshopur metro station (Keshopur nalla) & Keshopur sabji mandi to Mukharjee park grid having route length 2000 M & 3000 M.

Scheme no- 8: Estimate for conversion of 33 kV D/C O/H Peeragarhi -Mukharjee ckt 1 & 2 Tower line by laying of 3Cx400 sq.mm. XLPE Cables (4 nos cable) from Tower no 1 in front of GGSH to Mukharjee Park Grid having Route length-2800 M.

3.02.00 In-feed route map (attached below)

4.00.00 TECHNICAL SPECIFICATION

Please refer individual Technical Specification

5.00.00 SCHEDULES

SCHEDULE -1
TECHNICAL DEVIATION FROM THE SPECIFICATION
(This shall be part of Technical bid)

Technical deviation from specification if any, shall be listed out in below format

Sl no	Specification cl no	Deviation	Benefit to BRPL

SCHEDULE -II
BRPL APPROVED MAKE LIST OF MAJOR ITEMS

Sl no	Items Description	Approved Make
1	33kV outdoor Circuit Breaker	• ABB Ltd. • Siemens Ltd. • GE • CGPISL
2	33kV Isolator	• ABB LIMITED. • SIEMENS LIMITED. • CROMPTON GREAVES LIMITED.
3	33kV Lightning arrester	• ALSTOM • OBLUM ELECTRICAL INDUSTRIES PVT. LIMITED. • LAMCO INDUSTRIES PVT. LIMITED. • ABB LIMITED • CROMPTON GREAVES LIMITED. • ELECTROLYTE • RAYCHEM
4	33kV Control and Relay Panel	• ABB LIMITED. • SCHNEIDER ELECTRIC LIMITED. • SIEMENS LIMITED.
5	33kV outdoor CT and PT	• CROMPTON GREAVES LIMITED • KAPCO ELECTRIC PVT. LIMITED • MEHRU ELECTRICAL & MECHANICAL ENGINEERS P LIMITED • GE • BHEL • ABB Ltd.
6	33 kV/66kV Jointing and Termination KIT	• Raychem • 3M
7	HDPE Pipes	• Flow well • Tirupati • Narendra Polyplast • Flexi flow • Shivam Irrigation Works Pvt. Ltd. (Shivano) • Safal Polymer pvt ltd • Jindal Sanitations pvt ltd • Rajshree Technoplast pvt ltd.

8	Chemical Earthing	• JMV • Pragati • True Power • Genius Protection • Axis Electrical component
9	33Kv/66kV Jointing and Termination KIT	• Raychem • 3M
10	LDR (Line differential relay) Laying of cable 33 kV 2RX3CX400 SQMM from 220 kV Lodhi Road to NDSE Substation (Route Length- 5500 mtr))	Make- Schneider Model- For NDSE with 50 V DC P54321RULM0K68M For Lodhi Road 220 V DC P54331RULM0K68M
11	LDR (Line differential relay) Laying of 02 Nos 33kV 3CX400 sq.mm. XLPE cable from 220 kV RK Puram to R.K.Puram-1 Grid substation.	Make: Schnider / Equivalent in Alstom Model: RKP-1 Grid side – P54321RUHM0K68M -1 No for 50V DC 220kV DTL RK Puram Grid side- b) P54331RUHM0K68M -1 No for 220V DC
12	LDR for other projects	Bidders to take make and model details from BRPL before submission of price bid.

BSES

Technical Specification of Aluminum Lugs and Ferrules

Specification no – BSES-TS-11-ALF-R0

Rev:		0
Date:		04 Apr 2022
Pages:		11
Prepared by	Jeena Borana	
	Vani Sood	
Reviewed by	Srinivas Gopu	
	Amit Tomar	
Approved by	Gaurav Sharma	
	K. Sheshadri	

INDEX

1.0 SCOPE OF SUPPLY 3
2.0 STANDARDS & CODES 3
3.0 SERVICE CONDITIONS 3
4.0 MAJOR DESIGN PARAMETERS 3
5.0 MATERIAL 5
6.0 MARKING 5
7.0 TESTING & INSPECTION 5
8.0 DEVIATION 5
9.0 PACKING & DELIVERY 6
10.0 DOCUMENTS SUBMISSION 6
11.0 DRAWINGS 7

1.0 SCOPE OF SUPPLY

The specification covers design, manufacturing, testing of Aluminum Lugs and ferrules at manufacturers works before dispatch. Packing, delivery of material and submission of documents/test reports to purchaser.

2.0 STANDARDS & CODES

2.1	IS: 8308 -1993	Compression type tubular in-line connectors for Aluminum conductors of insulated cable
2.2	IS:5082 - 1998	Wrought Aluminum & Aluminum alloy bars, rods, tubes, sections, plates & sheets for electrical Applications
2.3	IEC: 61394	Overhead lines - Requirements for greases for aluminum, aluminum alloy and steel bare conductors
2.4	IS:8309 -1993	Compression type tubular terminal ends for aluminum conductors of Insulated cables
2.5	IS: 191- 2007	Specification for copper

3.0 SERVICE CONDITIONS

3.1	Location	Outdoor
3.2	Average grade atmosphere	Heavily polluted, Dry
3.3	Maximum altitude above sea level	1000M
3.4	Ambient air temperature	Highest 50Deg C Average 40Deg C
3.5	Minimum ambient air temperature	0 Deg C
3.6	Relative Humidity	100%
3.7	Rainy month	June to October
3.8	Maximum Rainfall (mm)	1450
3.9	Wind Pressure (Kg/Sq.m)	195
3.10	Seismic Zone	Zone IV as per IS : 1893

4.0 MAJOR DESIGN PARAMETERS

4.1	Ferrule	An aluminum ferrule is an aluminum compression type tubular inline connector for aluminum conductors of insulated cables for rated voltages up to and including 1.1 kV. a) **In-Line Connector -** A connecting device accommodating two electrical conductors to form straight joint. b) **Transition/Reducer Connector -** A connecting device accommodating two electrical conductors of different sizes to form a transition joint.

4.2	General Design Parameters of Ferrule	a) Electrical conductivity: More than 60 % IACS Cleaning after manufacturing: Caustic soda cleaning b) Ferrule should be filled with oxidation inhibiting paste & sealed with caps
4.3	LT Aluminum Ferrule	a) Machine marking: Clear and distinct machine marking as specified in drawing on outer surface of ferrule to facilitate crimping. Total number of crimps should be as per drawing. b) No Knurling on inner surface of ferrule. c) Internal, external diameter & length of ferrule shall be as per drawing. d) Ferrule design suitable for conductor of type: Compacted Sector Shape
4.4	Lug	A connecting device with barrel accommodating respective conductor. Size of electrical cables for rated voltages up to and including 1.1kV. Aluminum Lug: An aluminum lug is essentially a connecting device for connecting aluminum conductor with aluminum bus bars.
4.5	General Design Parameters for Lug	a) Cleaning after manufacturing: Caustic soda cleaning. b) Barrels of the Lugs should be filled with oxidation inhibition paste & sealed with caps.
4.6	Aluminum LT lug	Size to be used for 10, 25, 50, 95, 150, 300, 630, 1000 sqmm: a) Machine Marking: Clear and distinct marking at specified distance on outer surface of lug to facilitate better crimping. b) No knurling on inner surface of the lug c) Internal diameter, external diameter, length of barrel, length of palm & other dimensions shall as per drawing. d) Electrical conductivity: Min. 60% IACS e) All corners shall be rounded off. All dimensions are in mm. Refer Drawing for dimension and permissible tolerances.

5.0 MATERIAL

5.1	Material for Lug and ferrule	a) Material of Lug and Ferrule shall be 99% Electrolytic grade Aluminum conforming to Aluminum of grade 19501 (Temper Designation-M) of IS 5082/1981. b) Hardness of the material used shall be between 18-21 Vickers Hardness Numbers.
5.2	Make	Raw Material make shall be Hindalco/Banco/Jindal Aluminum/BSES approved Reputed make

6.0 MARKING

6.1	Identification	For Ferrule: Type of cable to be connected, size and make shall be engraved on each ferrule. For aluminum Lug: Size of cable and make shall be engraved on each lug for Aluminum lug/Street light lug.

7.0 TESTING & INSPECTION

All the tests shall be carried out in accordance with IEC / IS standards.

7.1	Visual Check	The Ferrule & lug shall be visually checked and shall free from external defects.
7.2	Dimensional Check	The dimensional requirements shall be checked for Ferrule & Lug as per the drawing.
7.3	Acceptance Test	Following tests needs to be conducted by the vendor during inspection (value shall be followed as per IS/IEC) 1. Flattening 2. Electrical Conductivity 3. Resistivity 4. Physical properties (Tensile Strength and Hardness) 5. Two samples of similar size to be sampled for Temperature Rise test and chemical composition from the offered lot and shall be carried out from NABL approved Lab.

8.0 DEVIATION

Deviations from this Specification shall be stated in writing with the tender by reference to the Specification clause/GTP/Drawing and a description of the alternative offer. In absence of such a statement, requirements of the Specification shall be met without exception.

9.0 PACKING & DELIVERY

9.1	Packing	Packing to be done in transparent polythene bags of min.150 micron thickness so as to not get torn due to handling during packing/transit of lugs. Sealing should be done essentially with Heat sealers only.
9.2	Identification Labels	The pack should have a label indicating the a) Manufacturer's name b) SAP code number & PO. No. with date c) Month & year of manufacturing d) Size of Ferrule/lug with type e) Number of items f) "BSES Yamuna Power Ltd."

10.0 DOCUMENTS SUBMISSION

Document submission shall be as per the matrix given below. All documents/drawing shall be provided in soft copy for each section. Language of the documents shall be English only. Deficient/improper drawing submission may liable for rejection.

S.No.	Detail of Document	For Tender	For Approval/Review	Final Submission
10.1	Guaranteed Technical Particulars (GTP)	Required	Required	Required
10.2	Deviation Sheet, if any	Required	Required	Required
10.3	GA and Dimensional Drawing	Required	Required	Required
10.4	Manufacturer's quality assurance plan and certification for quality standards		Required	Required
10.5	Make of Raw Materials	Required	Required	Required
10.6	Inspection and test reports, carried out in manufacturer's works			Required
10.7	Routine Test Certificates			Required
10.8	Test certificates of all the raw materials			Required

11.0 DRAWINGS

ALUMINIUM TERMINAL LUGS

SNO.	SIZEMM^2	E ±0.1	A ±0.1	C ±0.1	D ±0.5	F ±0.1	B ±0.2	H ±0.5	G ±0.5	J ±0.6
1.	10MM^2	6.4	4.4	7.2	10	2.8	9	9	8	30

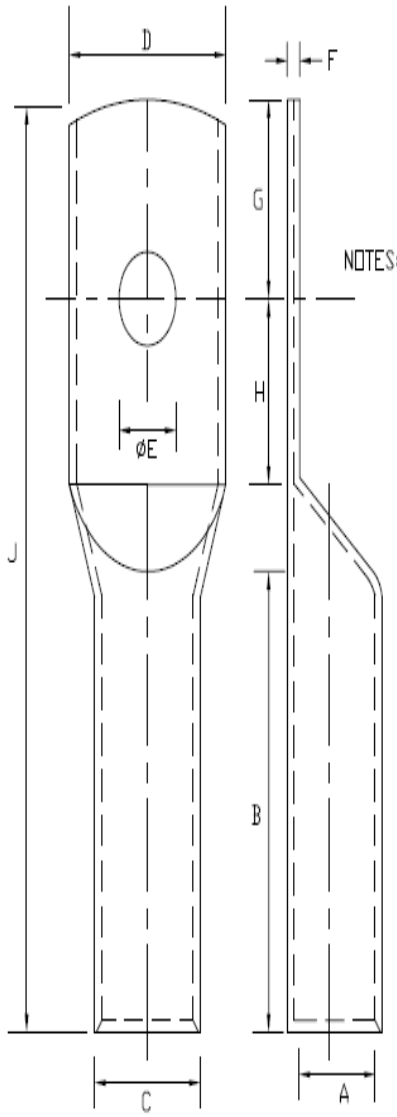

NOTES:- 1 ALL THE DIMENTIONS ARE IN MM

2 LUGS MATERIAL SHALL CONFIRM TO ALUMINUM OF GREAD 19501 AS PER IS 5082

3 LUGS SHALL HAVE MARKING AS PER RESPECTIVE SIZE AND 'BSES LOGO'

4 BARREL SHALL BE CAPED & FILLED WITH OXIDATION INHIBITENT SO AS TO AVOID OXIDATION OF THE ALUMINUM

5 CLEAR AND DISTINCT MARKING TO BE SPECIFIED ON BARREL LUG TO FACILITATE BETTER CRIMPING.

6 TWO SAMPLES OF SIMILAR SIZE TO BE SAMPLED FOR TEMPERATURE RISE TEST AND CHEMICAL COMPOSITION TEST ON EVENT OF ORDER.

7 ALL CORNERS SHALL BE ROUNDED OFF.

BSES

TITLE:-

Aluminum Tube Terminal Lug Long Barrel 10mm round conductor–Single Hole

DWG No.:-

ALUMINUM TERMINAL LUGS

SNO.	SIZEMM^2	E ±0.1	A ±0.2	C ±0.2	D ±1	F ±0.1	B ±1	H ±0.5	G ±0.5	J ±1
1.	25MM^2	8.4	6.8	12	18	5	32	12	9.5	60
2.	50MM^2	10.5	10	16	25	6	42	14.5	14	80
3.	95MM^2	13	13.5	22	32	8	56	18	15.5	102
4.	150MM^2	13	16.5	25	35	8	65	25	25	125

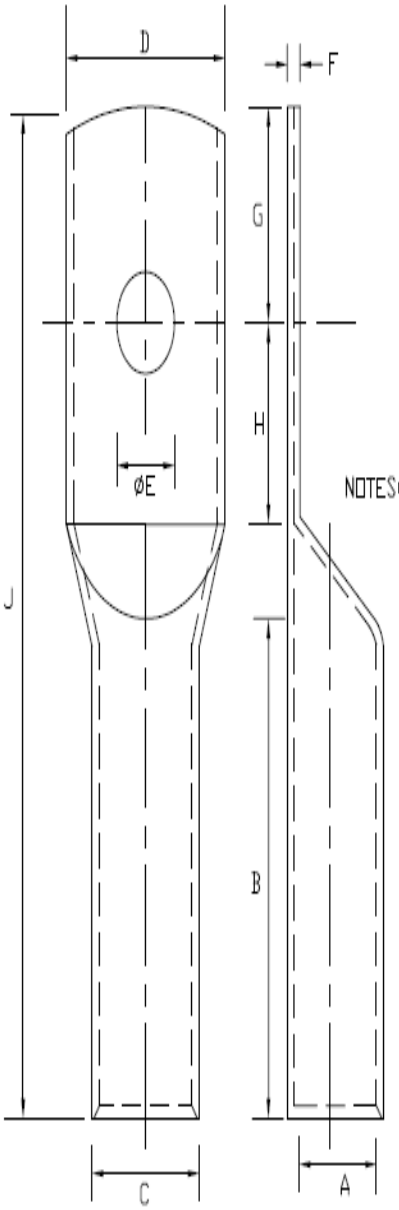

NOTES:- 1 ALL THE DIMENTIONS ARE IN MM

2 LUGS MATERIAL SHALL CONFIRM TO ALUMINUM OF GREAD 19501 AS PER IS 5082

3 LUGS SHALL HAVE MARKING AS PER RESPECTIVE SIZE AND 'BSES LOGO'

4 BARREL SHALL BE CAPED & FILLED WITH OXIDATION INHIBITENT SO AS TO AVOID OXIDATION OF THE ALUMINUM

5 CLEAR AND DISTINCT MARKING TO BE SPECIFIED ON BARREL LUG TO FACILITATE BETTER CRIMPING.

6 TWO SAMPLES OF SIMILAR SIZE TO BE SAMPLED FOR TEMPERATURE RISE TEST AND CHEMICAL COMPOSITION TEST ON EVENT OF ORDER.

7 ALL CORNERS SHALL BE ROUNDED OFF.

BSES

TITLE:-
Aluminum Tube Terminal Lug Long Barrel For Round conductor-Single Hole

DWG No.:

ALUMINIUM TERMINAL LUGS

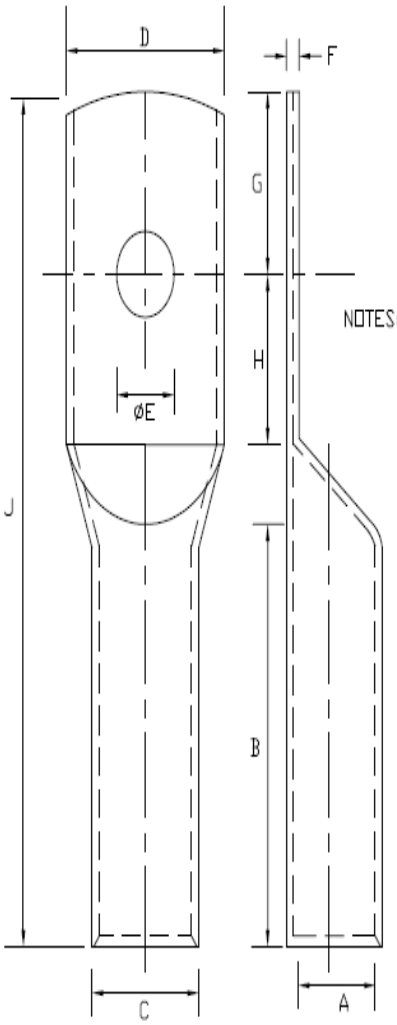

SNO.	SIZEMM²	E ±0.1	A	C	D	F ±0.2	B	H	G	J ±1
1.	1CX 300MM²	17	21.5-22	32-32.5	47.5-48	10	79-80	39.5-40	29.5-30	165
2.	4CX 300MM²	17	24.3-24.7	33.8-34.2	47.5-48	10	79-80	39.5-40	29.5-30	165
3.	400MM²	17	26-26.4	38.5-39	53.5-54	125	115	39.5-40	29.5-30	200

NOTES:- 1 ALL THE DIMENTIONS ARE IN MM

2 LUGS MATERIAL SHALL CONFIRM TO ALUMINUM OF GREAD 19501 AS PER IS 5082

3 LUGS SHALL HAVE MARKING AS PER RESPECTIVE SIZE AND 'BSES LOGO'

4 BARREL SHALL BE CAPED & FILLED WITH OXIDATION INHIBITENT SO AS TO AVOID OXIDATION OF THE ALUMINUM

5 CLEAR AND DISTINCT MARKING TO BE SPECIFIED ON BARREL LUG TO FACILITATE BETTER CRIMPING.

6 TWO SAMPLES OF SIMILAR SIZE TO BE SAMPLED FOR TEMPERATURE RISE TEST AND CHEMICAL COMPOSITION TEST ON EVENT OF ORDER.

7 ALL CORNERS SHALL BE ROUNDED OFF.

BSES

TITLE:-
Aluminum Tube Terminal Lug Long Barrel for 300sqmm & 400sqmm cable round and sector-Single Hole

DWG No.:

ALUMINIUM DIN TYPE TERMINAL LUGS

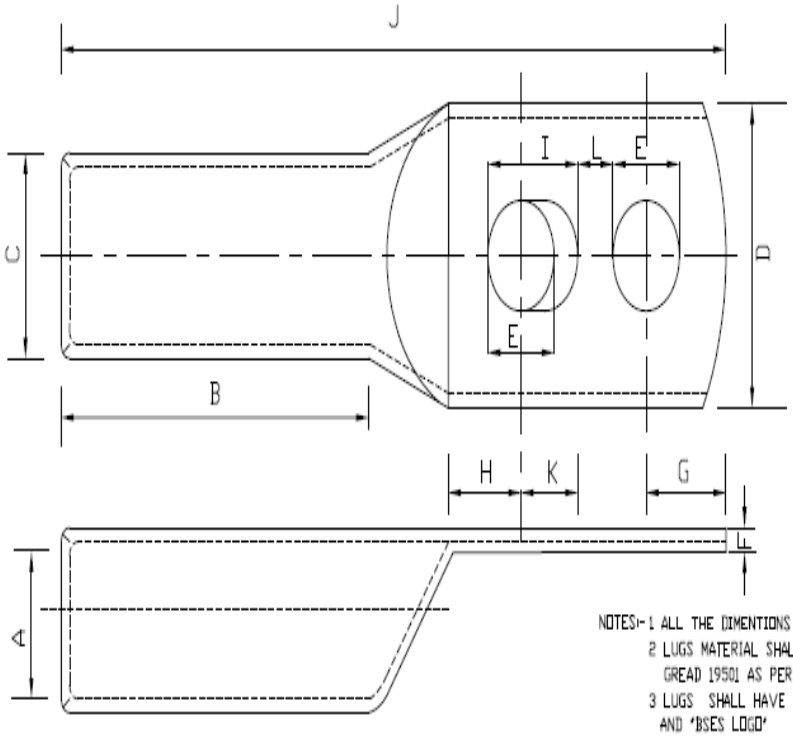

NOTES:- 1 ALL THE DIMENTIONS ARE IN MM
2 LUGS MATERIAL SHALL CONFIRM TO ALUMINUM OF GREAD 19501 AS PER IS 5082
3 LUGS SHALL HAVE MARKING AS PER RESPECTIVE SIZE AND 'BSES LOGO'
4 BARREL SHALL BE CAPED & FILLED WITH OXIDATION INHIBITENT SO AS TO AVOID OXIDATION OF THE ALUMINUM
5 CLEAR AND DISTINCT MARKING TO BE SPECIFIED ON BARREL LUG TO FACILITATE BETTER CRIMPTING
6 TWO SAMPLES OF SIMILAR SIZE TO BE SAMPLED FOR TEMPERATURE RISE TEST AND CHEMICAL COMPOSITION TEST ON EVENT OF ORDER.
7. ALL CORNERS SHALL BE ROUNDED OFF.

SNO.	SIZEMM^2	E ±0.1	A	C	D	B ±1	H	K	I	L	G	J ±1	F ±0.2
1.	630MM^2	18	31.5-32	44.5-45	63-63.5	120	36-36.2	25-25.2	34-34.2	16-16.2	24-24.2	245	12.5
2.	1000MM^2	20	43-43.5	56-56.5	77-77.5	140	38	26-26.2	36-36.2	16-16.2	25	270	13

BSES

TITLE:-
Aluminum Tube Terminal Lug Long Barrel–
for 630 & 1000 sqmm round conductor–Double holes

DWG No.:-

COMPRESSION TYPE ALUMINIUM TUBULAR IN-LINE CONNECTORS FOR NON TENSION CONNECTORS OF ALUMINIUM CONDUCTORS

SIZE	A	C	J
25	6.8–7.1	12.0–12.5	65–75
50	9.3–9.6	16–16.5	80–90
95	13.2–13.6	22–22.5	100–110
150	16.3–16.7	25–25.5	120–130
300	23.3–23.7	34–34.5	140–150
400	26–26.4	38.5–39	205–215
630	34–34.4	50–50.5	235–245

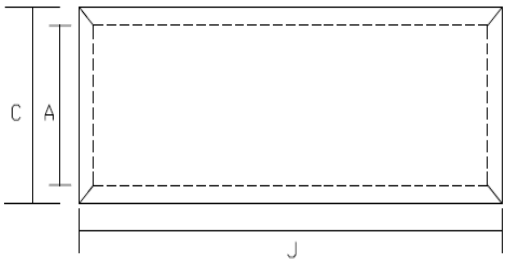

NOTES:-

1. ALL THE DIMENTIONS ARE IN MM
2. REFERANCE : SPECIFICATION AS PER TABLE 2 OF IS-8308
3. MATERIAL : ELECTROLYTIC GRADE ALUMINIUM AS PER IS: 5082
4. FINISH : NATURAL

BSES

TITLE:-
ALUMINIUM IN-LINE
CONNECTORS HEAVY DUTY

DWG No.:-

BSES

Technical Specification

For

66kV, Single core Cable

Specification no – BSES-TS-40-1C66-R0

Rev.		0
No. of Pages		31
Date		28 Apr 2022
Prepared by	Abhishek Vashistha	
	Gautam Deka/ Pronab Bairagi	28/04/22 28/04/2022
Reviewed by	Puneet Duggal	
	Amit Tomar	
Approved by	Gaurav Sharma	Gaurav
	Gopal Nariya	

INDEX

1.0 SCOPE 3

2.0 STANDARDS & CODES 3

3.0 SERVICE CONDITIONS 3

4.0 DESIGN FEATURES 4

5.0 INSPECTION & TESTING 7

6.0 SHIPPING, HANDLING & SITE SUPPORT 8

7.0 DEVIATIONS 9

Annexure – A Scope, Documentation and Delivery schedule 10

Annexure–B: Guaranteed Technical Particulars (Data by Supplier) 11

Annexure–C: List of Subvendor 18

Annexure–D: Drawing of Sealing End Cap 21

Annexure–E: Drawing of Cable pulling eye 22

Annexure–F: BSES format (typical) for Quality Assurance Plan QAP 23

Annexure–G: Testing and manufacturing process requirements w. r. t. TR- XLPE insulation 31

Annexure–F: Deviation format 31

1.0 SCOPE

The scope of supply includes Design, Manufacture, testing at manufacturer's works before dispatch, packing, delivery including unloading and stacking of 66kV Single Core cable complete with all accessories at site/store.

2.0 STANDARDS & CODES

Materials, equipment and methods used in the manufacture of Cable shall conform to the latest edition of following:

S No.	STANDARD	DESCRIPTION
2.1	IS–8130	Conductor for insulated electric cables & flexible cords
2.2	IS-5831	PVC insulation and sheath of electric cables
2.3	IS-3975	Mild steel wires strips and tapes for armoring cables
2.4	IS-5216	Guide for safety procedures and practices in electrical works
2.5	IS-7098 (Part – III)	Cross-linked polyethylene insulated thermoplastic sheathed cables specification.
2.6	IS – 10810	Methods of test of cables
2.7	IEC-60811	Common test methods for insulating and sheathing materials of electric cables and optical cables
2.8	IEC-60228	Conductor for insulated cables
2.9	IEC-60840	Power cable with extruded insulation and their accessories for rated voltage above 30kV up to 150kV- Test methods and requirements

3.0 SERVICE CONDITIONS

Cables to be supplied against this specification shall be suitable for satisfactory operation under the following service conditions-

3.1	Average grade atmosphere	Heavily polluted, Dry
3.2	Maximum altitude above sea level	1000M
3.3	Relative Humidity	100%
3.4	Ambient air temperature	Highest 50 Deg C Average 40 Deg C Minimum 0 Deg C
3.5	Operating temperature	0 Deg C - 50 Deg C
3.6	Rainfall	750mm concentrated in four months

4.0 DESIGN FEATURES

S No.	Parameters	Technical Requirements	Offered by Vendor
4.1.0	Manufacturing process	The cable shall be manufactured by "Triple head extrusion process". The conductor screen, Insulation & Insulation screen shall be co-extruded by onetime process to ensure homogeneity and reduction of voids in the insulation and the screening system of the cable, whereby enhancing the life of the cable. The cable shall be strictly manufactured by "DRY CURE and DRY COOLING " process.	
4.2.0	Conductor	Electrolytic grade aluminum conductor shall consist of flexibility class-2 in accordance with IS 8130/IEC 60228. The shape of conductor shall be compacted, stranded, and circular.	
4.3.0	Longitudinal water sealing of conductor	Shall be achieved by water swelling fibers in the interstices of the conductor. The fibers shall turn into jelly/swell, when in contact with water making the conductor water tight.	
4.4.0	Semi conducting separator tape	Semi-conducting separator tapes shall be applied over the conductor, suitable for continuous operating conductor temperature of 90^0C.	
4.5.0	Conductor screen	The conductor screen shall consist of extruded semi-conducting compound which shall be fully compatible with the conductor and extruded insulation. Outer surface of semiconductor screen shall be super smooth, cylindrical and firmly bonded to the overlaying insulation.	
4.6.0	Insulation	The extruded WTR - XLPE insulation shall be of very high degree of purity. The average thickness shall not be less than nominal value as given in annexure "B". The minimum thickness at any point shall not be less by more than 10% of the nominal value. Percentage eccentricity of the insulation shall not be more than10%.	
4.7.0	Insulation Screen	The insulation screen shall consist of extruded semi-conducting compound which shall be fully compatible with extruded insulation. Insulation screen shall be firmly bonded to the insulation.	

S No.	Parameters	Technical Requirements	Offered by Vendor
4.8.0	Make of insulation and semi conducting screen	For Insulation: WTR-XLPE of Dow/Borealis/Hanwa For Conductor & Insulation Screen: Semiconducting compound of Dow/Borealis/Hanwa Any deviation to above shall not be acceptable.	
4.9.0	Core	The ovality of the core shall not be more than 5%.	
4.10.0	Inner Longitudinal water sealing bedding	Semi-conducting water swell-able tapes shall be applied over the extruded semi-conducting insulation screening with a minimum overlap of 10%.	
4.11.0	Metal screening (if required to meet the short circuit rating)	The metallic screen shall consist of a layer of copper tape applied in helical form. Copper tape overlap: Minimum 10%	
4.12.0	Outer Longitudinal water sealing bedding (if metallic screening is provided)	Semi-conducting water swell-able tapes shall be applied over the metallic screen again with a minimum overlap of 10%.	
4.13.0	Metallic sheath	The metallic sheath shall be made of Corrugated aluminum sheathing with minimum thickness of 1.75mm and nominal thickness of 1.8mm, provided with high-viscosity bitumen-based compound coating, in conjunction with textile tape as carrier material for corrosion protection of the outer surface of corrugated aluminium sheathing. Further the corrugations shall be filled with compatible filler material to provide smooth round surface over the aluminium corrugated sheathing, so as to prevent ingress / traveling of water along the corrugations	
4.14.0	Outer Sheath	The outer sheath shall consist of extruded black colored HDPE type ST-7 with anti-termite protection. The Minimum thickness shall be 3.3 mm at any point. Nominal Thickness shall be 4 mm. Carbon black content shall be 2.5 ±0.5%	
4.15.0	Semi conductive layer over the	Extruded Semi conductive layer shall be either extruded or graphite coating.	

	outer sheath		
4.16.0	Cable Rating	The cable size shall be suitable to carry rated load current on 66 kV continuously without exceeding the maximum conductor temperature of 90^0 C.	
4.17.0	Drum Length	500 meter +/- 5% (short lengths not acceptable except the last length and minimum acceptable short length shall be 250 meters.). The Overall tolerance - 2 % for the total cable length of the entire order Manufacturer shall not be allowed to put two cable pieces of different short length in same cable drum.	
4.18.0	Embossing	The extruded outer sheath shall be embossed with meter marking at interval of 1 meter. Meter marking shall start from zero in every drum. The ”A” end meter marking and “Z” end meter marking and the drum lengths shall be printed on the drum flange along with other markings. The outer sheath shall also be embossed with (min.) a) Voltage designation b) Type of construction/cable code (e.g.A2X2Y) c) Number of core and nominal cross sectional area. d) Type of cable “Electric Cable” e) Manufacturers name & trademark f) Name of buyer (e.g.BSES) g) Month & year of manufacturing h) Batch no / Lot no. i) Sequential length marking j) Purchase order number & date k) ISI mark l) Individual Drum number Progressive sequential marking shall be start at zero for each drum	
4.19.0	Joints and Terminations	The Joints and Terminations to be offered with the cable shall be fully type tested as per IS 60840. The Joints and Terminations shall match all technical performance parameters of the specified cable. The Joints and Terminations would be either Heat Shrink or Cold-Shrink.	

5.0 INSPECTION & TESTING

S No.	Parameters	Technical Requirements	Offered by Vendor
5.1.0	Type test	The cable and the associated accessories like Joints and terminations of same voltage, design and number of cores shall be Type Tested from CPRI/ERDA as per IEC 60840/IS7098 (part-3) with latest amendments. Type test report (from CPRI/ERDA only) of not more than five (5) years old shall be submitted for the same type, size and voltage rating of the cable offered, along with the bid to qualify in the tender. All type tests shall be carried out in accordance with IEC-60840 / IS 7098 (part-3) and in accordance with the sequence prescribed therein. Type Test Required After Award of PO: Type test on one cable drum of each type/rating from any lot shall be conducted at CPRI/ERDA on sample basis as per relevant IS/IEC. Sample shall be sealed by BSES during inspection of cable. This type test is applicable subject to BSES requirement and cost shall be borne by BSES	
5.2.0	Routine test	a) Each drum length of cable shall be subjected to the tests as mentioned in IEC 60840, IS 7098 (Part-3), IEC 60229 and IS 10810 b) Impulse voltage test of one drum and Physical dimension of each and every layer along with component.	
5.3.0	Acceptance Tests	The sampling & acceptance tests shall be conducted as per IEC: 60840 / IS: 7098 (Part-3) and approved BSES QA plan for each lot of cable during the inspection of lot at manufacturer's works.	

5.4.0	Special tests	The following tests shall be carried out as special tests a) Conductor examination as per IEC-60840 for conformance of IEC 60228/IS 8130. b) Measurement of thickness of insulation as per Clause 10.6 of IEC- 60840 and Clause 8 of IEC-60811-1-1./ IS 10810 part 6 c) Void and contamination as per IS 7098 (Part-3) d) Sheath Integrity Test e) Carbon black content test in Inner sheath & Outer Sheath f) Hot set test for TR-XLPE insulation as per Clause 10.9 of IEC-60840/ IS 10810 Part 30	
5.5.0	Inspection	The buyer reserves the right to inspect cables at the Seller's works at any time prior dispatch, to verify compliance with the specifications. In-process and final inspection call intimation shall be given in 10 days advance to purchaser. In the event of any discrepancy in the test reports i.e. test reports not acceptable or any type tests(including special /additional tests, if any) not carried out , same shall be carried out without any cost implication to BSES before dispatch of cable.	
5.6.0	Test certificates	Three sets of complete test certificates shall be submitted along with the dispatch documents.	

6.0 SHIPPING, HANDLING & SITE SUPPORT

6.1.0	Packing	The cable shall be wound on non-returnable steel drums of suitable size of minimum hub diameter of 20D (where D is the overall diameter of the cable) and packed conforming to international standards. The drum shall be fully enclosed by suitable packing preferably PP sheeting. Cable shall have sea worthy packing in case cables are dispatched by shipping lines.

6.2.0	Pulling eye & sealing of Cable ends	A cable pulling eye shall be provided at "Z" end of cable on each drum. Suitable fillings/putty shall be used for sealing gap between outer sheath and pulling eye. Heat shrinkable sleeves with the pulling eye shall also be provided. The pulling eye shall be directly connected to the conductor and be capable to withstand a tensile load of 30N/mm^2 of conductor area. The "A" end of the cable shall be sealed with filling material/putty and heat shrinkable cap. Drawing of the pulling eye shall be submitted along with the bid for review.
6.3.0	Drum identification label	The following information shall be marked on the drum: The following information shall be marked on the drum: a) Drum identification number b) Trade name or trade mark; if any c) Name of manufacturer d) Name of buyer i.e. BSES e) Nominal sectional area of the conductor of the cable f) Type of cable and voltage for which it is suitable g) Length of the cable on the drum, with "A" end and "Z" end markings h) Purchase order number with SAP item code i) Year and month of manufacturing j) Direction of rotation of drum (an arrow) k) Net weight of cable in drum and gross weight of cable with drum l) Batch no or Lot no.
6.4.0	Shipping	The seller shall give complete shipping information concerning the gross weight, size of each packing.
6.5.0	Handling & Storage	Manufacturer instruction shall be followed. Detail handling & storage instruction sheet/manual needs to be furnished before commencement of supply.
6.6.0	Transit damage	The seller shall be responsible for any transit damage due to improper packing.

7.0 DEVIATIONS

7.1	Deviation	Deviations from this Specification shall be stated in writing with the tender by reference to the Specification clause/GTP/Drawing and a description of the alternative offer. In absence of such a statement, it will be assumed that the bidder complies fully with this specification.

Annexure – A

Scope, Documentation and Delivery schedule

Document/Drawing submission shall be as per the matrix given below:

i. All documents/drawings shall be provided in soft copy only in returnable Pen drives
ii. Language of the documents shall be English only.
iii. Incomplete submission shall be liable for rejection.
iv. Document check sheet compliance shall be the first sheet for each submission stage i.e. Technical bid, Drawing Approval, Pre Dispatch.
v. No submission is acceptable without check list compliance.
vi. Deficient/ improper document/ drawing submission shall be liable for rejection.
vii. Order of documents shall be strictly as per the check list.
viii. Any drawing not included in the below table but necessary for detailed engineering shall be deemed to be included in bidder's scope.

S No.	Description	Bid	Approval	Pre Dispatch
8.1	Guaranteed Technical Particulars (GTP)	required	required	
8.2	Deviation Sheet, if any	required	required	
8.3	Detailed cross sectional drawing of cable	required	required	
8.4	Type test reports for the offered type and rating of cable and joints & terminations	required	required	
8.5	Complete product catalogue and Manual	required	required	
8.6	Certification for quality standards	required		
8.7	Make of Raw Materials	required	required	
8.8	Cable de-rating factors	required	required	
8.9	Dimensional drawing for pulling eye & End cap		required	
8.10	Manufacturer's Quality Assurance Plan		required	
8.11	Program for production and testing		required	
8.12	Detailed installation & commissioning instructions		required	
8.13	Test certificates of all raw materials			required
8.14	Inspection and routine test reports, carried out in manufacturer's works			required

Annexure–B: Guaranteed Technical Particulars (Data by Supplier)

S No.	Description	Unit	Data specified by the purchaser	Data to be filled by the manufacturer
1	Name of Manufacturer			
2	Country of manufacturer			
3	Type of cable			
4	Standard according to which cable is manufactured			
5	Rated voltage	kV	38/66	
6	Highest system voltage	kV	72.5	
7	System frequency	Hz	50	
8	No of phases per circuit	Nos	3	
9	System earthing		Solidly grounded	
10	Rated short time current of conductor	kA		
11	Rated short time current of metal sheath (alone)	kA		
12	Rated short time current of metal screen (if provided)	kA		
13	Rated short time current of metal sheath and screen	kA	19	
14	Duration of short circuit current	Sec	1	
15	Impulse withstand voltage 1.2/50 micro sec wave	kVp	325	
16	Power frequency withstand voltage	kV(rms)	140	
17	Conductor			
a)	Nominal cross sectional area	mm^2	1000 / 630	
b)	Type class of conductor		Compacted Stranded Circular	
c)	Material of conductor		Aluminum	
d)	Flexibility class of conductor		Class -2	
e)	Minimum numbers of strands	No.		
f)	Diameter of strands before compaction. (nominal / Minimum)	mm / mm		
g)	Material of longitudinal water sealing filling of conductor			

S No.	Description	Unit	Data specified by the purchaser	Data to be filled by the manufacturer
18	Details of semi conducting tape over the conductor			
19	Conductor Screen			
a)	Material and type			
b)	Minimum thickness	mm	0.8	
c)	Make and grade of semi conducting compound.			
20	Insulation			
a)	Material of Insulation		TR-XLPE	
b)	Nominal thickness	mm	11	
c)	Minimum thickness		9.9	
d)	Make and grade of insulation compound			
e)	Maximum dielectric stress at the conductor surface	kV/mm		
21	Insulation screen			
a)	Material and type			
b)	Minimum thickness	mm	0.8	
c)	Make and grade of semi conducting compound.			
22	Inner water swellable tape			
a)	Nominal thickness	mm	0.3	
b)	Minimum swell height in one minute.	mm	12 mm in one minute	
c)	Water swallable tape overlap	%	min 10%	
23	Copper tape required to meet the short circuit rating (if provided)			
a)	Thickness and width of copper tape	mm / mm		
24	Outer water swellable tape	mm		
a)	Nominal thickness	mm	0.3	

S No.	Description	Unit	Data specified by the purchaser	Data to be filled by the manufacturer
b)	Minimum swell height in one minute.	mm	12 mm in one minute	
c)	Overlap	%	10% min	
25	Nominal diameter under metal sheath	mm		
26	Material of the metal sheath		Corrugated aluminum(with corrosion protection& corrugation filling)	
27	Minimum thickness of Corrugated Aluminum sheath	mm	1.75	
28	Nominal radial clearance allowed under metal sheath (in case of corrugated aluminum sheathing)	mm	Vendor to provide	
29	Nominal diameter over metal sheath	mm		
30	Outer Sheath			
a)	Material and type		HDPE type ST 7	
b)	Minimum thickness	mm	3.3	
c)	Nominal thickness	mm	4	
d)	Anti termite treated?		Yes / No	
e)	Color		Black	
31	Material of semi-conductive coating/extrusion over the outer jacket			
32	AC test voltage at works for insulation.	KV(rms)	90	
33	DC test voltage at works for outer jacket.	KV (DC)	25	
34	Overall dia of completed single core cable	mm		
35	Weight per meter of complete cable	kg/m		

S No.	Description	Unit	Data specified by the purchaser	Data to be filled by the manufacturer
36	Short circuit capacities with maximum conductor temperature of 250Deg C : (conductor temperature of 90 Deg C at the commencement of short circuit) a) 0.5 second duration b) 1 second duration c) 2 second duration d) 3 second duration	kA		
37	Minimum radius of bend round: which cable can be laid a) Direct burial inground b) Inducts	mm		
38	Maximum D.C. resistance of conductor per KM at 20^0C	Ohm/km	0.0469 for 630 mm^2 cable 0.0291 for 1000 mm^2cable.	
39	Maximum AC resistance of conductor per KM at 90 deg. C	Ohm		
40	Equivalent star reactance per KM of 3 phase circuit at 50 Hz	Ohm		
41	Maximum electrostatic capacitance per KM of cable	pf		
42	Maximum continuous current carrying capacity per circuit when laid in ground as per the following parameters (with screens cross bonded) -Maximum continuous conductor temperature of 900 C -Maximum conductor temperature during short circuit of 2500 C -Ground temperature of 300C -Soil resistivity of 1500C- cm/Watt -Depth of laying of 150cm	Amp		
43	Maximum continuous current carrying capacity per cable when laid inair with ambient temperature of 40^0C and other	Amp		

S No.	Description	Unit	Data specified by the purchaser	Data to be filled by the manufacturer
	parameters as per S no 42 (with screens cross bonded)			
44	Rating factors for ambient air temperature attached	Yes/No		
45	Rating factors for ground temperature attached	Yes/No		
46	Rating factors for phase spacing in flat formation attached	Yes/No		
47	Rating factors for grouping of cable laid in ground in horizontal formation attached	Yes/No		
48	Rating factors for grouping of cable laid in ground in tri-foil touching formation attached	Yes/No		
49	Rating factors for thermal resistivity of soil attached	Yes/No		
50	Rating factors for depth of laying attached	Yes/No		
51	Max.power factor of charging KVA of cable when laid direct in the ground at normal voltage frequency at conductor temperature at 90^0C			
52	Max.dielectric power loss of cable per km of 3 phase circuit laid direct in ground at normal voltage, frequency and maximumconductortemperatureo f90^0C	Watt /km		
53	Sheath loss of cable per KM of 3 phase circuit at normal voltage frequency at maximum continuous current rating. a) Laid direct inground b) Drawn intoducts c) Installed in air	Watt/km		
54	Impedance per KM of 3phase circuit at 50 C/s and maximum conductor temperature. a. Impedance	Ohm		

S No.	Description	Unit	Data specified by the purchaser	Data to be filled by the manufacturer
	b. Reactance c. Positive and negative sequence d. Zero sequence e. Capacitance f. Conductance g. Inductive susceptance h. Conductive susceptance			
55	Standard drum length of cable	meters	500 +/- 5% (short lengths not acceptable except the last length)	
56	The overall quantity tolerance	%		
57	Cable to be wound on non returnable steel drum.	Yes/No	Yes	
58	Normal delivery length	meters		
59	Cable pulling Eye to be provided at "Z" end A End shall be provided with sealing end cap	Yes		
60	Tensile load withstand capacity for pulling eye		30 N / mm^2	
61	Approximate shipping weight for the normal deliver length with the drum size (flange dia. in mm and width in mm)	kg		
62	Drum size and weight (Flange dia X flange width X hub dia)			
63	Embossing details on outer sheath			
64	Sequential marking at every meter		Provided	
65	Process of cross linking of polyethylene.			
66	Induced Voltage in sheath, cable			
a)	In trefoil formation	V/km		
b)	In flat formation with D+70	V/km		

S No.	Description	Unit	Data specified by the purchaser	Data to be filled by the manufacturer
67	Cross Sectional Drawing of offered cable design with layer wise component details		To be provided by bidder	

Annexure - C

List of Sub-Vendors for critical items

Vendor/Bidder to state sub-vendors' names for other items, wherever approved names are not mentioned, for purchaser's approval during tendering stage else purchaser shall impose as per their requirement and bidder to follow the same in post-order stages.

Ser. No.	Raw Materials		Name of the Make
1.	XLPE Compound	1	Dow Chemicals , U.S.A.
		2	Borealis , Sweden
		3	Hanwha , South Korea
2.	Semi-Conducting Compound	1	Dow Chemicals, U.S.A.
		2	Borealis , Sweden
		3	Hanwha , South Korea
3.	Conductor Water-Blocking tapes / yarn	1	Lantor
		2	Geca
		3	Miracle
		4	Scapa
		5	Sneham International
4.	Water-Swellable Tapes (Pre-slitted)	1	Lantor
		2	Geca
		3	Miracle
		4	Scapa
		5	Sneham International

Ser. No.	Raw Materials		Name of the Make
5.	Aluminium Rod	1	Bharat Aluminium Co. Ltd. (BALCO)
		2	Hindustan Aluminium Co. Ltd. (HINDALCO)
		3	National Aluminium Co. Ltd. (NALCO)
		4	Vedanta (Sesa Sterlite)
6.	Copper Tape	1	Aggarwal Metal
		2	Indian Smelting
		3	Luvata Swedan
		4	Outokumpu Copper Strip AB, Swedan
7	Galvanised Steel Wires / Strips	1	Tata
		2	Balaji
		3	Systematic
		4	Mica Wires Pvt. Ltd.
		5	Bansal Industries
8	PVC Compound	1	Kalpana
		2	Universal
		3	SCJ Plastic
		4	Sriram Polytech
		5	Shri Ram Vinyl, Kota
9	P. P. Fillers	1	Vijoy Polymers
		2	Yash Polymers
		3	AVSL Industries
10	Core Identification Tape	1	AVSL Industries
		2	Yash Polymer

Ser. No.	Raw Materials		Name of the Make
		3	Vijoy Polymers
11	PE Compound	1	Borealis
		3	Shakun
		4	Kalpana

ANNEXURE -D

DIMENSIONS

SIZE	A EXP.(Min.)	A REC.(Max)	B EXP.(Min.)	C EXP.(Min.)	D EXP.(Min.)	LC %	T (WALL REC. ± 20 %)
EC 120/150	75	34	120	105	50	± 10	4.2
EC 240/300	100	62	130	110	70	± 10	3.5
EC 400	145	75	155	120	70	± 10	4.6

EXP - Expanded (as supplied), REC - Recovered freely, LC - Longitudinal Change,T - Wall Thickness, EC - End Cap

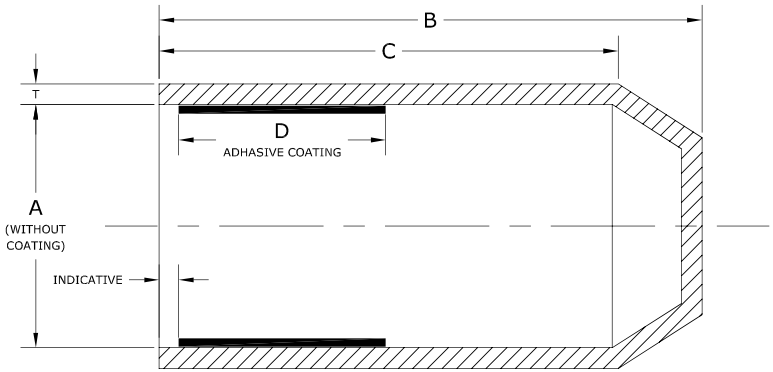

END CAP
(AS SUPPLIED)
SECTIONAL VIEW

MATERIAL SPECIFICATIONS

	Characteristics	Test Class	Value	Test Method
A	**Physical Properties**			
1	Specific Gravity	Type	1.05 ± 0.2	ASTM D-1505
2	Water Absorption	Type	1 % (max)	ASTM D-570 / ISO 62
3	Tensile Strength	Routine	10 N /sqmm (min)	ASTM D-412 / ISO 37
4	Ultimate Elongation	Routine	300% (min)	ASTM D-412 / ISO 37
5	Hardness	Type	45 shore D ± 3	ASTM D-2240
6	**Thermal Test**			
B	Thermal Ageing (120°C for 500 hrs)			
1	Tensile Strength	Type	8 N/sqmm (min)	ASTM D-412 / ISO 37
2	Ultimate Elongation	Type	200% (min)	ASTM D-412 / ISO 37
C	**Electrical Properties**			
1	Volume Resistivity	Type	10^{12} ohm-cm. (min)	ASTM D-257 / IEC 93
2	Dielectrical Strength	Type	10 kV/mm. (min)	ASTM D-149 / IEC 243
3	Dielectric Constant	Type	5 (max)	ASTM D-150 / IEC 250

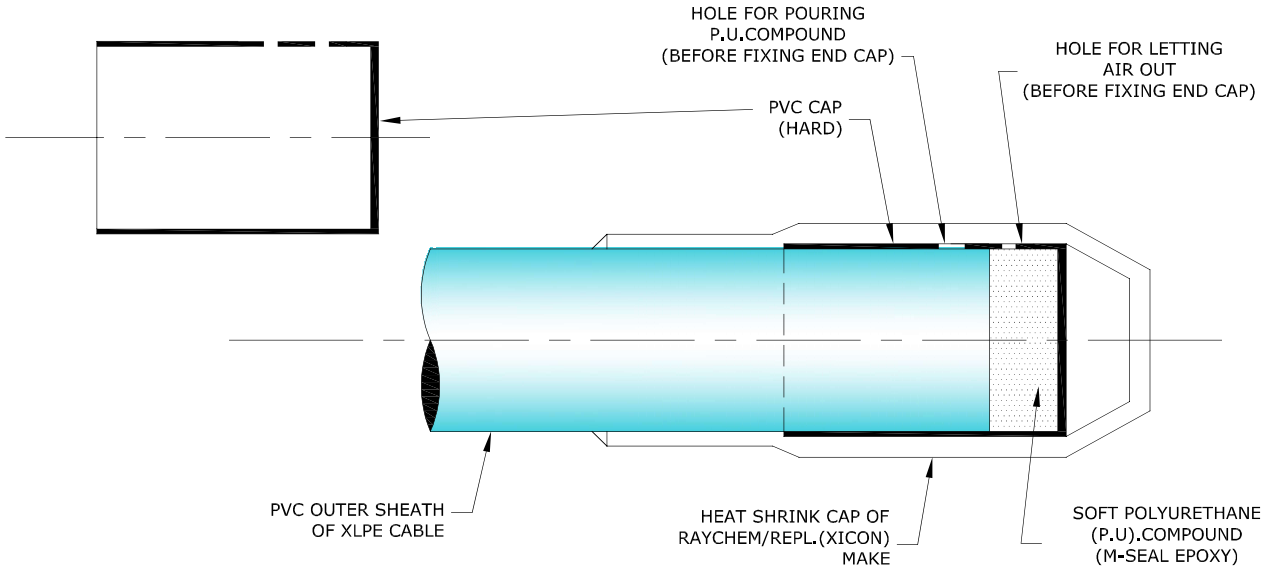

END CAP
(AFTER HEAT SHRINKING OVER THE CABLE END)

Note : 1) All dimension in mm
2) Colour Black
3) Size as mentioned in the table shall be stencilled on respective item

BSES

DRAWING No. MISC/E/4-1131/1698

SCALE :NOT TO SCALE | DATE: 09-05-2011

END SEALING CAP
(FOR XLPE CABLE)

DRAWN BY:	CHECKED BY:	APPROVED BY:

REVISIONS

Addl V.P.

ANNEXURE -E

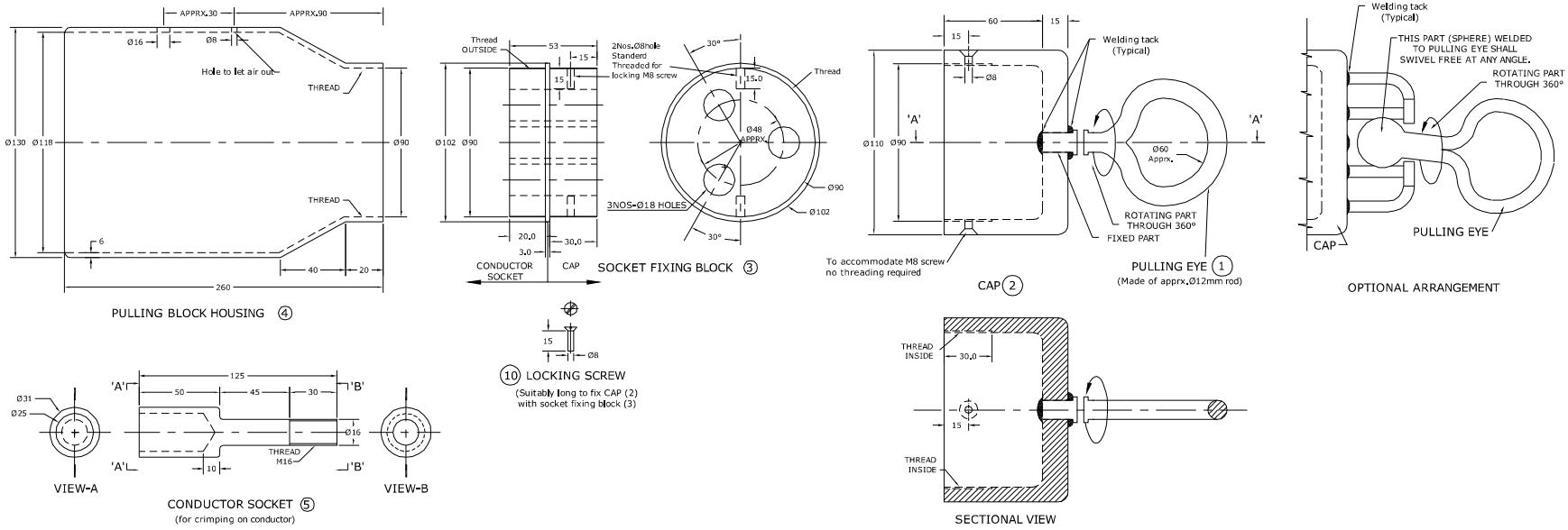

Exploded View

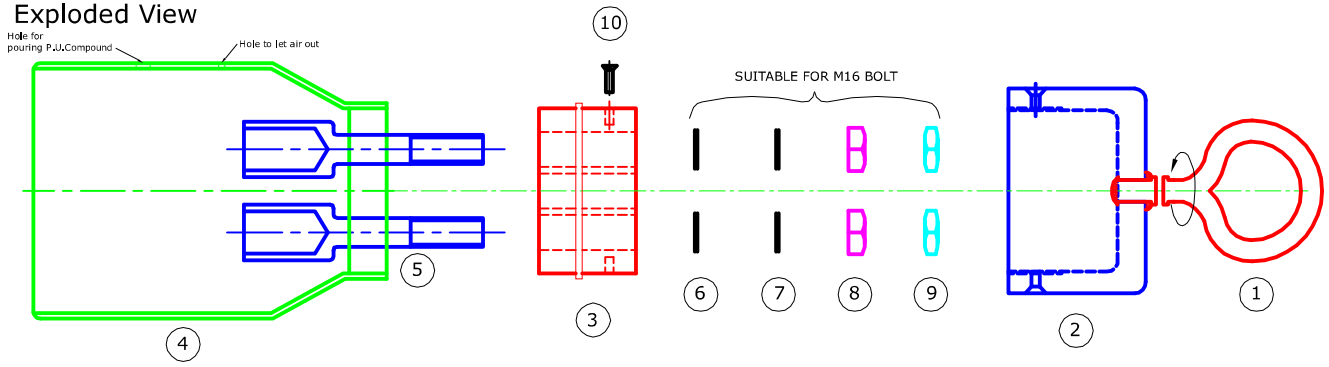

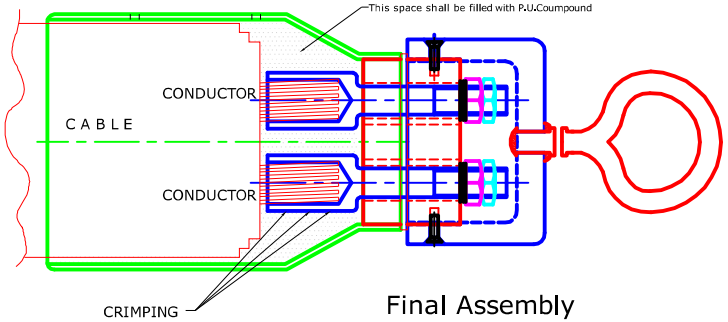

Final Assembly

EXAMPLE:
1) For cable size 33kV, 3/C X 400sq mm Al XLPE.
2) Diameter over conductor : 23.8mm apprx.
   Overall diameter : 108±3mm apprx.
   Pulling force applicable on the cable : 30 N/sq mm
   Pulling eye shall withstand total force of : 36000N+Safety margin

NOTE:
1) All Dimensions are in mm, unless otherwise stated.
2) This drawing is typical / indicative.Separate dimensioned drawing for cable pulling eye assembly, suitable for required size & rating of cables, shall be submitted for approval,prior to manufacturing.
3) After fixing cable pulling eye, P.U.(Poly-Urethane) Compound shall be poured to occupy inner spaces to avoid ingress of Water / Moisture.
4) After P.U.Compound oozes/flows out from the cable side,the same edge shall be sealed with suitable sleeve/Tape.

NO.	DISCRIPTION	QTY.	MATERIAL
10	LOCKING SCREW	2	M.S.Zinc-Plated
9	LOCK NUT	3	M.S.Zinc-Plated
8	NUT	3	M.S.Zinc-Plated
7	SPRING. WASHER	3	M.S.Zinc-Plated
6	PLAIN WASHER	3	M.S.Zinc-Plated
5	CONDUCTOR SOCKET	3	AL.
4	PULLING BLOCK HOUSING	1	M.S.Zinc-Plated
3	SOCKET FIXING BLOCK	1	M.S.Zinc-Plated
2	CAP	1	M.S.Zinc-Plated
1	PULLING EYE	1	M.S.Zinc-Plated

BSES

DRAWING No. MISC/E/4-1133/1699

SCALE :NOT TO SCALE | DATE: 09-05-2011

CABLE PULLING EYE ASSEMBLY (TYPICAL)

DRAWN BY: | CHECKED BY: | APPROVED BY:

REVISIONS

Addl V.P.

ANNEXURE-F

QUALITY ASSURANCE PLAN (QAP)
FOR 66 kV EHV CABLES

S. NO.	COMPONENT & OPERATION	CHARACTERISTICS	CLASS	TYPE OF CHECK	QUANTUM OF CHECK	REFERENCE DOCUMENT	ACCEPTANCE NORMS	FORMAT OF RECORD	AGENCY			Remark
									SV	MFR	BSES	
1	2	3	4	5	6	7	8	9	10	11	12	13
	Legend : SV : Sub-Vendor of Cable Manufacturer, MFR : Cable Manufacturer, MPS : Material Purchase Specification,											
	P : Perform, W : Witness, V : Verification											
A	**RAW MATERIAL**											
1	Aluminium/Copper Rod	a) Tensile strength	Major	Physical	Sample	MPS	MPS	Reg./Sheet	P	P/V	V	
		b) Resistivity	Major	Electrical	Sample	MPS	MPS	Reg./Sheet	P	P/V	V	
		c) Diameter	Major	Physical	Sample	MPS	MPS	Reg./Sheet	P	P/V	V	
		d) Chemical composition	Major	Chemical	Sample	MPS	MPS	Test certificate	P	V	V	
		e) Surface finish	Major	Visual	Sample			-	P	P	_	
2	PVC Compound	a) Tensile Strength	Major	Physical	Sample	MPS	MPS	Reg./Sheet	P	P/V	V	
		b) Elongation at break	Major	Physical	Sample	MPS	MPS	Reg./Sheet	P	P/V	V	
		c) Thermal stability	Major	Physical	Sample	MPS	MPS	Reg./Sheet	P	P/V	V	
3	**TR-XLPE** Compound (Borealis/Dow chemical/ Hanwa)	a) Packing	Minor	Visual	100%	MPS	MPS	-	P	V	-	
		b) Tensile Strength	Major	Physical	Sample	MPS	MPS	Reg./Sheet	P	P/V	V	
		c) Elongation at break	Major	Physical	Sample	MPS	MPS	Reg./Sheet	P	P/V	V	
		d) Hot set test	Major	Physical	Sample	MPS	MPS	Reg./Sheet	P	P/V	V	
		e) Volume Resistivity	Major	Electrical	Sample	MPS	MPS	Reg./Sheet	P	P/V	V	
		f) Cure Curve (Max. Torque)	Major	Physical	Sample	MPS	MPS	Reg./Sheet	-	P	V	
		g) Density	Major	Physical	Sample	MPS	MPS	Reg./Sheet	P	P/V	V	
4	Semi-conducting Compound (Borealis/Dow chemical/ Hanwa)	a) Packing	Minor	Visual	100%	MPS	MPS	-	P	V	-	
		b) Volume Resistivity	Major	Electrical	Sample	MPS	MPS	Reg./Sheet	P	P/V	V	
		c) Tensile Strength	Major	Physical	Sample	MPS	MPS	Reg./Sheet	P	P/V	V	
		d) Elongation at break	Major	Physical	Sample	MPS	MPS	Reg./Sheet	P	P/V	V	
		e) Cure Curve (Max. Torque)	Major	Physical	Sample	MPS	MPS	Reg./Sheet	-	P	V	
		f) Density	Major	Physical	Sample	MPS	MPS	Reg./Sheet	P	P/V	V	
5	Copper tape	a) Thickness & width	Major	Physical	Sample	MPS	MPS	Reg./Sheet	P	P/V	V	
		b) Tensile Strength	Major	Physical	Sample	MPS	MPS	Reg./Sheet	P	P/V	V	
		c) Elongation at break	Major	Physical	Sample	MPS	MPS	Reg./Sheet	P	P/V	V	
		d) Resistivity	Major	Electrical	Sample	MPS	MPS	Reg./Sheet	P	P/V	V	
6.	Armour wires/strips (Galvanised steel)	a) Dimensions	Major	Physical	Sample	MPS	MPS	Reg./Sheet	P	P/V	V	
		b) Surface condition/finish	Major	Visual	Sample	MPS	MPS	Reg./Sheet	P	P/V	V	
		c) Tensile Strength	Major	Physical	Sample	MPS	MPS	Reg./Sheet	P	P/V	V	
		d) Elongation at break	Major	Physical	Sample	MPS	MPS	Reg./Sheet	P	P/V	V	
		e) Torsion test for round wire	Major	Physical	Sample	MPS	MPS	Reg./Sheet	P	P/V	V	
		f) Wrapping test	Major	Physical	Sample	MPS	MPS	Reg./Sheet	P	P/V	V	
		g) Mass of zinc coating	Major	Physical	Sample	MPS	MPS	Reg./Sheet	P	P/V	V	
		h) Uniformity of zinc coating	Major	Physical	Sample	MPS	MPS	Reg./Sheet	P	P/V	V	
		i) Adhesion test	Major	Physical	Sample	MPS	MPS	Reg./Sheet	P	P/V	V	
		j) Resistivity test	Major	Electrical	Sample	MPS	MPS	Reg./Sheet	P	P/V	V	
7	Water Swellable	a) Dimensions	Minor	Physical	Sample	MPS	MPS	Reg./Sheet	P	P/V	V	

QUALITY ASSURANCE PLAN (QAP)
FOR 66 kV EHV CABLES

S. NO.	COMPONENT & OPERATION	CHARACTERISTICS	CLASS	TYPE OF CHECK	QUANTUM OF CHECK	REFERENCE DOCUMENT	ACCEPTANCE NORMS	FORMAT OF RECORD	AGENCY			Remark
									SV	MFR	BSES	
1	2	3	4	5	6	7	8	9	10	11	12	13
	Legend : SV : Sub-Vendor of Cable Manufacturer, MFR : Cable Manufacturer, MPS : Material Purchase Specification,											
	P : Perform, W : Witness, V : Verification											
	tape	b) Swelling height	Major	Physical	Sample	MPS	MPS	Reg./Sheet	P	P/V	V	
		c) Resistivity	Major	Electrical	Sample	MPS	MPS	Reg./Sheet	P	P/V	V	
		d) Weight	Major	Physical	Sample	MPS	MPS	Reg./Sheet	P	P/V	V	
8	Steel Drum	a) Dimension	Major	Meas.	1 sample per size	IS 10418 / Purchase order		-	P	P	-	
		b) Finish & workman ship	Minor	Visual	1 sample per size	Compliance to standard Engineering norms & free from surface defects		-	P	P	-	
9	Binder tape	a) Dimensions & material	Minor	Physical	Sample	MPS	MPS	-	P	P	-	
10	Polypropylene filler	a) Size	Minor	Physical	Sample	Purchase order	Purchase order	-	P	P	-	
11	Heat shrinkable end cap	a) Bore diameter	Major	Physical	1 sample per size	--	--	-	-	P	-	
		b) Length of end cap	Minor	Physical	1 sample per size	--	--	-	-	P	-	
B	**PROCESS INSPECTION**											
1	Wire Drawing	a) Diameter	Major	Physical	Sample			Reg./Sheet	-	P	V	
		b) Surface finish	Major	Visual	100 %	Smooth & free from defects		--	-	P	-	
		c) Tensile test (for Al)	Major	Physical	Sample	IS: 8130/84	IS: 8130/84	Reg./Sheet	-	P	V	
		d) Elongation test (for Cu)	Major	Physical	Sample	IS: 8130/84	IS: 8130/84	Reg./Sheet	-	-	V	
		e) Wrapping test (for Al)	Major	Physical	Sample	IS: 8130/84	IS: 8130/84	Reg./Sheet	-	P	V	
2	Stranding	a) No. of wires/strands	Major	Physical	At the time of m/c setting			Reg./Sheet	-	P	V	
		b) Lay length & Lay direction	Major	Physical	-do-			-	-	P	V	
		c) Dia of conductor	Major	Physical	During setting & once in each shift			Reg./Sheet	-	P	V	
		d) Surface finish	Major	Visual	100 %	No surface defects and free from sharp edges, scratches, grease, oil etc.		-	-	P	-	
3	Core extrusion (Conductor screen, Insulation & insulation screen)	a) Compound Make/Grade	Major	Visual	During m/c setting			-	-	P	-	Insulation screen shall be freely strippable, without application of heat.
		b) Thickness of insulation & extruded S.C. layers	Major	Physical	During m/c setting after stabilisation	Tech. Data Sheet / IS 7098/III	Tech. Data Sheet / IS 7098/III	Reg./Sheet	-	P	V	
		c) Surface finish	Minor	Visual	100 %	Smooth & free from defects		-	-	P	-	
		d) Printing on outer semi- conducting layer	Major	Visual	100 %	"DO NOT HEAT, FREELY STRIPPABLE"		-	-	P	-	
		e) Tensile Strength	Major	Physical	Sample	IS 7098/III	IS 7098/III	Reg./Sheet	-	P	V	
		f) Elongation at break	Major	Physical	Sample	IS 7098/III	IS 7098/III	Reg./Sheet	-	P	V	
		g) Hot set test	Major	Physical	Sample	IS 7098/III	IS 7098/III	Reg./Sheet	-	P	V	
		g1) Ovality of core	Minor	Physical	Sample	Tech. Data Sheet	Tech. Data Sheet	Reg./Sheet	-	P	V	

BSES

QUALITY ASSURANCE PLAN (QAP)

FOR 66 kV EHV CABLES

S. NO.	COMPONENT & OPERATION	CHARACTERISTICS	CLASS	TYPE OF CHECK	QUANTUM OF CHECK	REFERENCE DOCUMENT	ACCEPTANCE NORMS	FORMAT OF RECORD	AGENCY			Remark
									SV	MFR	BSES	
1	2	3	4	5	6	7	8	9	10	11	12	13
	Legend : SV : Sub-Vendor of Cable Manufacturer, MFR : Cable Manufacturer, MPS : Material Purchase Specification,											
	P : Perform, W : Witness, V : Verification											
		h) Eccentricity of insulation	Minor	Physical	Sample	Tech. Data Sheet	Tech. Data Sheet	Reg./Sheet	-	P	V	
		i) Core diameter	Minor	Physical	Sample	Tech. Data Sheet	Tech. Data Sheet	Reg./Sheet	-	P	V	
		j) Void & contamination test for insulation (Silicon Oil test)	Major	Physical	Sample			-	-	P	V	
		k) Wafer boil test for extruded semi-conducting layers	Major	Physical	1 sample/lot	BIS draft Specn	BIS draft Specn	Reg./Sheet	-	P	V	
4	Taping - water Swellable semi-conducting	a) Dimensions	Minor	Physical	Sample	Tech. Data Sheet	Tech. Data Sheet	-	-	P	-	
		b) Tape Application (Overlap)	Minor	Visual	During m/c setting	Suitable overlap	Suitable overlap	-	-	P	-	
5	Taping - Copper tape	a) Width & Thickness of tape	Major	Physical	During m/c setting	Tech. Data Sheet	Tech. Data Sheet	Reg./Sheet	-	P	V	
		b) Number of tapes	Major	Visual	During m/c setting	Tech. Data Sheet	Tech. Data Sheet	Reg./Sheet	-	P	V	
		c) Tape application (Overlap)	Minor	Visual	During m/c setting	Tech. Data Sheet	Tech. Data Sheet	-	-	P	-	
6	Laying up	a) Identification of cores	Major	Visual	During m/c setting	Tech. Data Sheet	Tech. Data Sheet	-	-	P	-	Cores shall be laidup with PP fillers & suitable tape binder shall be provided over laid up assembly
		b) Direction of lay, core Sequence & Lay length	Major	Visual	During m/c setting	IS 7098/III, PIL- W-02	IS 7098/III, PIL- W-02	-	-	P	-	
		c) Application of binder tape	Minor	Visual	During m/c setting	Tech. Data Sheet		-	-	P	-	
		d) Shape of laid up assembly	Minor	Visual	100%	Reasonably circular	Reasonably circular	-	-	P	-	
7	Inner sheath	a) Material & type	Major	Visual	During m/c setting	Tech. Data Sheet	Tech. Data Sheet	-	-	P	-	
		b) Thickness	Major	Physical	During m/c setting & drum change	Tech. Data Sheet & IS 7098/III	ech. Data Sheet & IS 7098/III	Reg./Sheet	-	P	V	
		c) Surface finish	Minor	Visual	100 %	Surface shall be smooth & free from defects		-	-	P	-	
		d) Colour of inner sheath	Major	Visual	100 %	Tech. Data Sheet	Tech. Data Sheet	-	-	P	-	
8	Armouring	a) Dimension of armour wires/strips	Major	Physical	During m/c setting	Tech. Data Sheet	Tech. Data Sheet	Reg./Sheet	-	P	V	No negative tol. on strip thickness/wire diameter
		b) No. of armour strip/wire	Major	Counting	During m/c setting	Tech. Data Sheet	Tech. Data Sheet	Reg./Sheet	-	P	V	
		c) Armour coverage	Minor	Visual	During m/c setting	IS 7098/III	IS 7098/III	-	-	P	-	
		d) Direction of lay	Major	Visual	During m/c setting	IS 7098/III	IS 7098/III	-	-	P	-	
		e) Lay length/Gear setting	Minor	Visual	During m/c setting			-	-	P	-	
		f) Surface finish	Major	Visual	100 %	No cross over/over riding of wire/strip		-	-	P		
9	Outer sheath/Rewinding	a) Material & type	Major	Visual	During m/c setting	Tech. Data Sheet	Tech. Data Sheet	-	-	P	-	
		b) Anti rodent & termite additives	Major	Visual	Each loading			Reg./Sheet	-	P	V	

QUALITY ASSURANCE PLAN (QAP)
FOR 66 kV EHV CABLES

S. NO.	COMPONENT & OPERATION	CHARACTERISTICS	CLASS	TYPE OF CHECK	QUANTUM OF CHECK	REFERENCE DOCUMENT	ACCEPTANCE NORMS	FORMAT OF RECORD	AGENCY			Remark
									SV	MFR	BSES	
1	2	3	4	5	6	7	8	9	10	11	12	13
	Legend : SV : Sub-Vendor of Cable Manufacturer, MFR : Cable Manufacturer, MPS : Material Purchase Specification,											
	P : Perform, W : Witness, V : Verification											
		b) Thickness	Major	Physical	Each length	Tech. Data Sheet	Tech. Data Sheet	Reg./Sheet	-	P	V	
		c) Overall diameter	Major	Physical	Each length	Tech. Data Sheet	Tech. Data Sheet	Reg./Sheet	-	P	V	
		d) Surface finish & colour of sheath	Major	Visual	100 %	Surface smooth & free from defects. Colour as per Tech. Data Sheet		-	-	P	-	
		e) Cable length verification	Major	Visual	Each length	Manufacturing Plan	Manufacturing Plan	-	-	P	-	
		f) Marking	Major	Visual	Each length	As per approved GTP/cross sectiona drawing		Reg./Sheet	-	P	V	
C	**FINAL INSPECTION**											
1	Routine tests	a) High Voltage	Critical	Electrical	100 %	IS 7098/III	IS 7098/III	Test Report	-	P	V	
		b) Conductor Resistance	Critical	Electrical	100 %	IS 8130/84	IS 8130/84	Test Report	-	P	V	
		c) Partial Discharge	Critical	Electrical	100 %	IS 7098/III	IS 7098/III	Test Report	-	P	V	
		d) Impulse	Critical	Electrical	One sample per lot			Test Report		P	V	
		e) Armour Coverage	Critical	Physical	One sample per lot			Test Report		P	V	
		f) Physiacal Dimensions	Critical	Physical	One sample per lot			Test Report		P	V	
		g) Freely Strippable insulation screen (Strippability Test)	Major	Physical	One sample per lot	Factory Standard	Factory Standard	Test Report	-	P	V	
2	Stage Inspection	Wire Drawing	Major	Visual	100 %	Tech. Data Sheet	IS/IEC	Test Report	-	P	W	Stage Inspection shall be conducted subject to BSES requirement
		Extrusion process	Major	Visual	100 %	Tech. Data Sheet	IS/IEC	Test Report	-	P	W	
		Raw maerial inspection at factory	Major	Physical	100 %	Tech. Data Sheet	IS/IEC	Test Report	-	P	W	
		Wrapping of Aluminium	Major	Physical	100 %	Tech. Data Sheet	IS/IEC	Test Report	-	P	W	
		Tensile test for Aluminium	Major	Physical	100 %	Tech. Data Sheet	IS/IEC	Test Report	-	P	W	
		a) Annealing test for copper	Major	Physical	Appendix A to IS 7098/III, each lot sample basis	IS 8130/84	IS 8130/84	-	-	P	V	Verification of process records.
		b) Tensile test for aluminium	Major	Physical		IS 8130/84	IS 8130/84	-	-	P	V	
		c) Wrapping test for aluminium	Major	Physical		IS 8130/84	IS 8130/84	-	-	P	V	Tests N/A on finished conductor.
		d) Conductor resistance test	Major	Electrical	Appendix A to IS 7098/III, each lot sample basis	IS 8130/84	IS 8130/84	Test Report	-	P	W	
		e) Test for thickness of insulation & sheath	Major	Physical		IS 7098/III & Tech. Data sheet	IS 7098/III & Tech. Data sheet	Test Report	-	P	W	
		f) Hot set test for insulation	Major	Physical		IS 7098/III	IS 7098/III	Test Report	-	P	W	

QUALITY ASSURANCE PLAN (QAP)
FOR 66 kV EHV CABLES

S. NO.	COMPONENT & OPERATION	CHARACTERISTICS	CLASS	TYPE OF CHECK	QUANTUM OF CHECK	REFERENCE DOCUMENT	ACCEPTANCE NORMS	FORMAT OF RECORD	AGENCY			Remark
									SV	MFR	BSES	
1	2	3	4	5	6	7	8	9	10	11	12	13
	Legend : SV : Sub-Vendor of Cable Manufacturer, MFR : Cable Manufacturer, MPS : Material Purchase Specification,											
	P : Perform, W : Witness, V : Verification											
3	Acceptance tests	g) Tensile strength & Elongation at break of insulation & outer sheath	Major	Physical	Each Lot Sample Basis	IS 7098/III & IS 5831/84	IS 7098/III & IS 5831/84	Test Report	-	P	W	
		h) Partial discharge test	Critical	Electrical		IS 7098/III	IS 7098/III	Test Report	-	P	W	
		i) High voltage test	Critical	Electrical		IS 7098/III	IS 7098/III	Test Report	-	P	W	
		j) Insulation resistance (Volume resistivity) test	Major	Electrical		IS 7098/III	IS 7098/III	Test Report	-	P	W	
		k) Tests for dimension of armour wires/strips	Major	Physical		IS 3975, IS 10810 Pt. 36 & Tech. Data sheet		Test Report	-	P	W	
		l) Test for anti termite & anti rodent property of outer sheath	Major	Physical		Tech. Data Sheet	Tech. Data Sheet	Reg./Sheet	-	P	W	
		m) Rewinding of cable on drum	Major	Visual		To check cable appearance, drum appearance, cable winding, packing, embossing/printing/sequential marking		Reg./Sheet	-	P	W	
		n) Void & contamination test for insulation (Silicon Oil test)	Major	Physical				Reg./Sheet	-	P	W	
		o) Wafer boil test for extruded semi-conducting layers	Major	Physical				Reg./Sheet	-	P	W	
		p) Freely Strippable insulation screen	Major	Physical		Factory Standard	Factory Standard	Test Report	-	P	W	
		q) Water Penetration test (WPT) on core (i.e.Logitudinal Water Blocking Test)	Major	Physical		IEC:60502	IEC:60502	Test Report	-	P	W	**Test shall be conducted for leakage of water through conductor.**
		r) Armour coverage	Major	Physical		As per data sheet & FS	As per data sheet & FS	Test Report	-	P	W	
		s) Ovality	Major	Physical		As per data sheet	As per data sheet	Test Report	-	P	W	
		t) Eccentricity	Major	Physical		As per data sheet	As per data sheet	Test Report	-	P	W	
		u) Mass & uniformity & zinc coating on armour	Major	Physical		As per data sheet & FS	As per data sheet & FS	Test Report	-	P	W	
		v) Resistivity of Strip armour	Major	Electrical		As per data sheet & FS	As per data sheet & FS	Test Report	-	P	W	
		w) Swelling height of water swellable tape	Major	Physical		As per data sheet & FS	As per data sheet & FS	Test Report	-	P	W	
		x) Flammability test	Major	Physical		As per IS-78098/II/2011	As per IS-78098/II/2011	Test Report	-	P	W	
		y)Impulse withstand test	Critical	Electrical		IS 7098/III	IS 7098/III	Test Report	-	P	W	

QUALITY ASSURANCE PLAN (QAP)
FOR 66 kV EHV CABLES

S. NO.	COMPONENT & OPERATION	CHARACTERISTICS	CLASS	TYPE OF CHECK	QUANTUM OF CHECK	REFERENCE DOCUMENT	ACCEPTANCE NORMS	FORMAT OF RECORD	AGENCY			Remark
									SV	MFR	BSES	
1	2	3	4	5	6	7	8	9	10	11	12	13
	Legend : SV : Sub-Vendor of Cable Manufacturer, MFR : Cable Manufacturer, MPS : Material Purchase Specification,											
	P : Perform, W : Witness, V : Verification											
		z) Ageing & Water absorption test(Gravimetric) on Insulation & Outer sheath	Major	Physical		IS 5831/84	IS 5831/84	Test Report	-	P	W	
		z1) Heating Cycle with Potential	Critical	Electrical	sample basis, once per PO			Test Report	-	P	W	
		z2) Raw Material Verification in all aspects	Major	Physical	Each Lot					P	W	
4	Type tests at vendor's works	a) Tests on conductor										
		i) Annealing test for copper	Major	Physical		IS 8130/84	IS 8130/84	-	-	P	V	Verification of process records. Tests N/A on finished conductor.
		ii) Tensile test for aluminium	Major	Physical		IS 8130/84	IS 8130/84	-	-	P	V	
		iii) Wrapping test for aluminium	Major	Physical		IS 8130/84	IS 8130/84	-	-	P	V	
		iv) Conductor resistance test	Major	Electrical		IS 8130/84	IS 8130/84	Test Report	-	P	V	
		b) Tests for armouring wires/strips										
		i) Dimensions of wire/strip	Major	Physical		IS 3975, IS 10810 Pt. 36 & Tech. Data sheet		Test Report	-	P	W	
		ii) Tensile strength & Elongation at break	Major	Physical		IS 3975	IS 3975	Test Report	-	P	W	Only for Steel wires/strips
		iii) Torsion test for wire	Major	Physical		IS 3975	IS 3975	Test Report	-	P	W	
		iv) Winding test for strip	Major	Physical		IS 3975	IS 3975	Test Report	-	P	W	
		v) Uniformity of zinc coating	Major	Chemical		IS 3975	IS 3975	Test Report	-	P	W	
		vi) Mass of zinc coating	Major	Chemical		IS 3975	IS 3975	Test Report	-	P	W	
		vii) Resistivity of wire/strip	Major	Electrical		IS 3975	IS 3975	Test Report	-	P	W	
		c) Test for thickness of insulation & sheath	Major	Physical		IS 7098/III & Tech. Data sheet	IS 7098/III & Tech. Data sheet	Test Report	-	P	W	
		d) Physical tests for insulation									W	
		i) Tensile strength & Elongation test	Major	Physical		IS 7098/III	IS 7098/III	Test Report	-	P	W	
		ii) Ageing in air oven	Major	Physical		IS 7098/III	IS 7098/III	Test Report	-	P	W	
		iii) Hot set test	Major	Physical		IS 7098/III	IS 7098/III	Test Report	-	P	W	
		iv) Shrinkage test	Major	Physical		IS 7098/III	IS 7098/III	Test Report	-	P	W	
		v) Water absorption (gravimetric)	Major	Physical	One sample per Tender	IS 7098/III	IS 7098/III	Test Report	-	P	W	
		e) Physical tests for outer sheath									W	
		i) Tensile strength & Elongation test at break	Major	Physical		IS 5831/84	IS 5831/84	Test Report	-	P	W	
		ii) Ageing in air oven	Major	Physical		IS 5831/84	IS 5831/84	Test Report	-	P	W	
		iii) Shrinkage test	Major	Physical		IS 5831/84	IS 5831/84	Test Report	-	P	W	

QUALITY ASSURANCE PLAN (QAP)
FOR 66 kV EHV CABLES

S. NO.	COMPONENT & OPERATION	CHARACTERISTICS	CLASS	TYPE OF CHECK	QUANTUM OF CHECK	REFERENCE DOCUMENT	ACCEPTANCE NORMS	FORMAT OF RECORD	AGENCY			Remark
									SV	MFR	BSES	
1	2	3	4	5	6	7	8	9	10	11	12	13
	Legend : SV : Sub-Vendor of Cable Manufacturer, MFR : Cable Manufacturer, MPS : Material Purchase Specification,											
	P : Perform, W : Witness, V : Verification											
		iv) Hot deformation test	Major	Physical		IS 5831/84	IS 5831/84	Test Report	-	P	W	
		v) Loss of mass in air oven	Major	Physical		IS 5831/84	IS 5831/84	Test Report	-	P	W	
		v) Heat shock test	Major	Physical		IS 5831/84	IS 5831/84	Test Report	-	P	W	
		vi) Thermal stability test	Major	Physical		IS 5831/84	IS 5831/84	Test Report	-	P	W	
		f) Electrical tests in sequence									W	
		i) Partial discharge test	Critical	Electrical		IS 7098/III	IS 7098/III	Test Report	-	P	W	
		ii) Bending test	Major	Physical		IS 7098/III	IS 7098/III	Test Report	-	P	W	
		iii) Partial discharge test	Critical	Electrical		IS 7098/III	IS 7098/III	Test Report	-	P	W	
		iv) Dielectric power factor as a function of voltage	Major	Electrical		IS 7098/III	IS 7098/III	Test Report	-	P	W	
		v) Dielectric power factor as a function of temperature	Major	Electrical		IS 7098/III	IS 7098/III	Test Report	-	P	W	
		vi) Heating cycle test	Major	Electrical		IS 7098/III	IS 7098/III	Test Report	-	P	W	
		vii) Dielectric power factor as a function of voltage	Major	Electrical		IS 7098/III	IS 7098/III	Test Report	-	P	W	
		viii) Partial discharge test	Critical	Electrical		IS 7098/III	IS 7098/III	Test Report	-	P	W	
		ix) Impulse withstand test	Critical	Electrical		IS 7098/III	IS 7098/III	Test Report	-	P	W	
		x) High voltage test	Critical	Electrical		IS 7098/III	IS 7098/III	Test Report	-	P	W	
		g) Insulation resistance (Volume resistivity test)	Major	Electrical		IS 7098/III	IS 7098/III	Test Report	-	P	W	
		h) Flammability test	Major	Physical		IS 7098/III	IS 7098/III	Test Report	-	P	W	
D	**PACKING & MARKING**											
1	Packing & Marking	a) Cable end sealing	Major	Visual	100 %	IS 7098/III/ Agreement	IS 7098/III/ Agreement	-	-	P	W/V	BSES representative may verify these characteristics on randomly selected drums.
		b) Pulling eye at leading end- removed from vendor scope, end cap shall be provided at both the end of cable	Major	Visual	100 %	As per agreement	As per agreement	-	-	P	W/V	
		b) Stencilling/Marking on drum	Minor	Visual	100 %	IS 7098(Part 2):2011/ Agreement	IS 7098(Part 2):2011/ Agreement	-	-	P	V	

QUALITY ASSURANCE PLAN (QAP)
FOR 66 kV EHV CABLES

S. NO.	COMPONENT & OPERATION	CHARACTERISTICS	CLASS	TYPE OF CHECK	QUANTUM OF CHECK	REFERENCE DOCUMENT	ACCEPTANCE NORMS	FORMAT OF RECORD	AGENCY			Remark
									SV	MFR	BSES	
1	2	3	4	5	6	7	8	9	10	11	12	13
	Legend : SV : Sub-Vendor of Cable Manufacturer, MFR : Cable Manufacturer, MPS : Material Purchase Specification,											
	P : Perform, W : Witness, V : Verification											

Note

1. Checks specified above for Raw Material, In-Process and Final Inspection shall be as relevant to the specific cable construction.
2. Number of samples shall be selected as per Factory Standard/Agreement wherever 'sample' is indicated for extent of check.
3. Plant standards shall be followed in case Technical Data Sheet does not include requirements for characteristics to be checked.
4. BSES may witness Raw material and in process inspection in addition to Routine/Acceptance tests at any time/stage of manufacturing.
5. BSES's Inspector may randomly select a cable drum for type testing at vendor's works.
6. For each of the offered lot for inspection, BSES may randomly select one cable drum for testing of end cap "Destructive testing" to verify adhesion of sealing cap to cable outer sheath. .
7. All factory Type Tests shall be Witnessed by BSES

Annexure- G

Testing and manufacturing process requirements w. r. t. TR- XLPE insulation

All cables made with TR-XLPE Insulation should be tested and/or certified to meet the following performance parameters as per ANSI /ICEA S-94-649 after one year AWTT.

Property	Units	Requirements Values
Min. Avg. Electrical Breakdown Strength(qual. test)	kV/mm	≥ 25
Impulse Strength	kV/mm	≥ 83
Water Tree Length	Mm	0.25
Max. Bowtie Tree Density	(Number per 16.4 cu. cm)	Maximum 15 (0.12-0.25 mm range)

Manufacturing processes to produce high-quality cables with the following characteristics:

- Cure consistency with hot set/creep less than 100%
- No voids larger than 75 microns per 16.4 cubic cm
- No ambers larger than 250 microns per 16.4 cubic cm
- No contaminants larger than 125 microns and less than 5 between 50-125 microns per cubic 16.4 cubic cm tested.
- Neutral indent on cable is less than 375 microns
- Cable insulation concentricity greater than 90% tested
- No protrusions greater than 75 microns at the conductor shield and 125 microns at the insulation shield

Annexure-H: Deviation Format

Sl. No.	Document Name	Clause No.	Deviation	Reason	Merit to BSES

BSES

Technical Specification

For

11kV Covered Conductor & Accessories

Specification no – BSES-TS-04-11CCA-R0

Rev		0
Date		01 April 2022
Prepared by	Abhishek Vashistha	
	Gautam Deka	01/04/2022
	Pronab Bairagi	01/04/2022
Reviewed by	Puneet Duggal	
	Amit Tomar	01/04/2022
Approved by	Gaurav Sharma	
	K Sheshadri	07/04/22

TABLE OF CONTENTS

1.0 SCOPE 3
2.0 STANDARDS 3
3.0 CLIMATIC CONDITIONS 3
4.0 GENERAL TECHNICAL REQUIREMENT 4
5.0 TESTS 11
6.0 INSPECTION 17
7.0 QUALITY ASSURANCE PLAN 18
8.0 DOCUMENTATION 19
9.0 PACKING & FORWARDING 21
10.0 DEVIATIONS 23
ANNEXURE-A guaranteed TECHNICAL PARAMETERS 23
ANNEXURE-B MAKE LIST 27

1.0 SCOPE

This specification provides design, manufacturing, testing, inspection, packing and dispatch to BSES New Delhi store/ site of XLPE insulated AAAC AL59 water tight DOG & GOAT covered conductor along with accessories (Cl.4.13), specified herein for their satisfactory operation in various lines and substations of BSES Rajdhani Power Ltd, New Delhi.

These covered conductors are to be used as overhead distribution conductors on single circuit and / or double circuit for BSES distribution lines and / or sub-stations.

2.0 STANDARDS

The covered conductor shall conform to the following International/Indian Standards, which shall mean latest revisions, with amendments/changes adopted and published, unless specifically stated otherwise in the Specification.

S. No.	International/ Indian Standard	Title
1	SS 4240814	Aluminium alloy stranded Conductors for overhead lines Al59 specifications
2	SS 4240813	Aluminium alloy wire for stranded Conductors for overhead lines- Al 59 wires
3	SS EN 50397-1	Covered conductors for overhead lines and the related accessories- Covered Conductors
4	SS EN50397-2	Covered conductors for overhead lines and the related accessories- Accessories for covered conductors- tests and acceptance criteria

3.0 CLIMATIC CONDITIONS

a)	Average grade atmospheric condition	Heavily polluted, dry
b)	Maximum altitude above sea level	1000 M

c)	Air temperature Ambient	i) Highest : 50˚C ii) Average : 30˚C iii) Minimum : 0˚C
e)	Relative Humidity	100 % max
f)	Thermal Resistivity of Soil	150˚C. cm / W (max.)
g)	Seismic Zone	4
h)	Rainfall	750 mm concentrated in four months

4.0 GENERAL TECHNICAL REQUIREMENT

CONDUCTOR CONSTRUCTION FEATURES

The specification generally covers the technical parameters of AAAC circular, water tight AL-59 DOG and GOAT conductor wounded with conductor screen, Inner layer of TR-XLPE insulation and black coloured outer insulation of XLPE with UV resistant, non tracking and erosion resistant properties as per SS EN 50397-1. Conductor must be water tight with yarn/tape.

The conductor shall therefore be suitable for satisfactory operation under the climatic conditions listed in clause 3.0.

Conductor Code as per EN 50397-1: 2006

Type Code	CC	
Covering Material	S X T	-for semi-conductive screen -for cross-linked Polyethylene -for thermoplastic polyethylene
Conductor material and cross section	According to EN 50182	AL59
Conductor design	W K	-for water tight -for compacted
Rated Voltage *U* in kV	kV	

Covered Conductor Code to be used by BSES-

Sr. No.	Description	Conductor Material	Cable Code
1.	XLPE insulated DOG conductor	Al	CCSX ▲-AL59 WK Ë KV
2.	XLPE insulated GOAT conductor	Al	CCSX ▲-AL59 WK Ë KV

For which -
▲= Nominal Conductor Cross Section in mm^2;
Ë= Rated Voltage (in kV)

4.1CONDUCTOR

The AAAC AL59 conductor should be as per SS 424 08 14 and its latest amendments. All the physical properties, design and dimension, strength of material, testing of material etc. shall be as per SS 424 08 14 and EN 50397-1.

The AL59 conductor shall have accurate chemical composition of Alloy so as to offer excellent corrosion resistance, better strength to weight ratio and improved conductivity. The solution treatment shall be done in a very sophisticated and advanced technology furnace with automatic quenching system.

The AL59 conductor wire shall meet the mechanical strength and resistance of the wire properties as mentioned in the GTP (Annexure-A)/ SS 42408 14.

The bidder should specify the source of raw materials along with the proof of last purchases made. BSES may reject the tender of the Bidders whose raw material manufacturers are found to be supplying any poor quality or Non-standard materials to BSES.

4.2 FILLING

The stranded conductor longitudinally watertight by means of adequate measures as e.g. filling with an adequate mass. The filling mass or other materials for obtaining the longitudinal water-tightness, shall be compatible with the conductor material and the material of the covering

4.3 FREEDOM FROM DEFECTS

The wires shall be smooth and free from all imperfections such as spills, splits, slag inclusion, die marks, scratches, fittings, blow-holes, projections, looseness, overlapping of strands, chipping of Aluminium

layers etc., and all such other defects which may hamper the mechanical & electrical properties of the conductor as also the installation of the conductor at the site etc. Special care shall be taken to keep away dirt, grit etc. during stranding.

4.4 WIRE SIZES

The Aluminium wires for the stranded conductor covered by this standard shall have diameters specified in the guaranteed technical particulars (Annexure-A) shall be as such to comply with the rated DC resistance while maintaining cross section as per the specification and shall be within the tolerances indicated therein.

4.5 JOINTS IN WIRES

4.5.1	Joints not allowed.

4.6 STRANDING

4.6.1	The wires used in the construction of AL59 conductor before stranding and after stranding shall satisfy all the relevant requirements as per the standards indicated in the specification or any other relevant standards with due justification.
4.6.2	In all constructions, the successive layers shall have opposite directions of lay, the outermost layer being right-handed. The wires in each layer shall be evenly and closely stranded.
4.6.3	In conductors having multiple layers of Aluminium wires, the lay ratio of any Aluminium layer shall not be greater than the lay ratio of the Aluminium layer immediately beneath it.

4.7 STANDARD LENGTH

4.7.1	The standard length of the conductor shall be 1000 meter per drum. A tolerance of ± 5% on the standard length shall be permitted. Only one short length with drum length not less than 500 mtr. shall be accepted in last lot. All lengths outside this limit of tolerance shall be treated as rejected drum. Also, two short lengths shall not be allowed in one drum.

4.7.2	Bidder shall also indicate the maximum single length, above the standard length, he can manufacture in the guaranteed technical particulars. This is required for special stretches like river crossing, society crossing etc. BSES reserves the right to place orders for the above length as per the requirement.

4.8 CONDUCTOR SCREEN

Extruded semi conducting material as per BSES approved make (Annexure-B).

Thickness shall be as per Guaranteed Technical Particulars of the specification (Annexure-A). (Tapes are not acceptable)

4.9INNER INSULATION

4.9.1	Extruded TR-XLPE (Tree retardant Cross Linked Poly-Ethylene) insulation with water tree retardant property.
4.9.2	The required compound used shall be from BSES approved sub-vendors only (Annexure-B).
4.9.3	Uniform thickness of insulation shall be within the permissible values as per specification (Annexure-A). Eccentricity check shall be carried out to ensure this.
4.9.4	Insulation colour: Natural

4.10INSULATION OUTER LAYER

4.10.1	Extruded XLPE (Cross Linked Poly-Ethylene) insulation, UV resistant, Non Tracking & Erosion Resistant Black coloured XLPE (SS EN 50397-1).
4.10.2	Make of compound shall as per BSES approved sub-vendors only (Annexure-B).
4.10.3	Uniform thickness of insulation shall be within the permissible values as per specification (Annexure-A). Eccentricity check shall be carried out to ensure this.

4.10.4	Shape of the conductor over the outer layer shall be circular, when manufactured / completed. Ovality check shall be carried out at factory, to detect any abnormality. Manufacturing quality shall be such that cable will retain its circular shape, even after it is laid at site.
4.10.5	Outer layer colour: Black
4.10.6	Covered conductors shall be provided with an identification of origin consisting of a continuous marking of the manufacturer's name or trademark on the surface of the covering. This marking shall be made by embossing. Embossing on outer insulation of conductor shall be as: 1. Type of conductor (conductor name) • CCSX ▲-AL59 WK 11 kV (for DOG conductor) • CCSX ▲-AL59 WK 33 kV (for GOAT conductor) **(for which ▲= Nominal Cross section of conductor in mm^2)** 2. Manufacturer's Name and Trade-mark 3. Name of buyer / purchaser, BSES 4. Month and year of manufacturing 5. Batch No. / Lot No. 6. Purchase order No. and date * Progressive (sequential) length of cable at every meter, starting from zero for every drum shall be printed with laser print.
4.10.7	UV protection on outer layer shall be provided. The Carbon black content shall be as per EN 50397-1
4.10.8	Sample will be sealed during Acceptance test of each and every lot for testing of Chemical composition test of Aluminium and UV test of outer layer which shall be conducted from BIS and NABL (both) accredited third party lab.

4.11 XLPE PROCESS

- Dry Cure process only
- Triple head extrusion only

4.12END SEALING CAP

Both the ends of the conductor shall be sealed with heat shrinkable PVC end cap before dispatching the final drum to BSES.

Drums without end sealing cap will not be accepted by BSES.

4.13 ACCESSORIES

- The Accessories shall abide SS EN 50483, SS EN 50397-1 and SS EN 50397-2 standards.
- All the accessories shall be type tested and the acceptance test shall be carried out as per standard SS EN 50397-2.
- BSES reserves the right to reject the bid if the type test report of accessories is not valid.
- The fittings shall be able to withstand the specific minimum failure load and shall not damage the covering (no damage shall occur which could affect the correct function of the covering) and shall be designed to prevent the ingress of moisture during service.

4.13.1	Anchoring (Dead end) Clamps	• As per NFC 33 041 September 2013/ EN 50483 as per latest amendments • Min. Breaking load = ~30kN • For anchoring or tensioning covered conductor
4.13.2	Plastic insulator ties	For gripping/holding of covered conductors with pin or spool type insulators
4.13.3	Suspension clamps	• Body made of insulating material with climatic resistance which provides an additional insulation between the pole and the cable • A stainless clip insert to avoid any abrasion due to vibrations • Locking and clamping of the bundle by a thermoplastic bolt with fusible wing nut. Shall have provision for removal and further installation. • The suspension clamps shall be so designed that the effect of vibration, both on the covered

		conductor and on the clamps themselves are minimized. The clamps shall be designed to avoid localized pressure or damage to the covered conductor. • The wear resistance of the articulation shall be sufficient to prevent deterioration in service. • Breaking load = ~8kN
4.13.4	Insulating piercing connectors	• To connect a covered tap conductor to a covered main conductor without stripping. • Connector shall be adapted for installation in polluted areas. • Connector shall be resistant to tracking phenomenon.
4.13.5	Pre insulated junction sleeve for AAAC covered conductors	• Connection: water tightness shall be assured by a soft joint • The sleeve shall mention— ○ Number and order of compressions to be made ○ Length to be stripped on the conductor ○ The die to be used
4.13.6	Markings	• Manufacturer's trade mark or logo; • Product code or reference; • Traceability code / batch number; • The minimum and maximum cross section for which the unit is suitable; • Tightening torque or die reference, if applicable; • Recycling code, if any. **NOTE:** Marking shall be provided as per SS EN 50397-2.

5.0 TESTS

5.1 GENERAL

The type test, acceptance test, routine test any other tests specifically demanded by BSES and tests during manufacturing shall be carried out by the manufacturer on the whole **covered conductor** and **accessories without any cost implication to BSES**.

5.1.1	Type tests shall mean those tests, which are to be carried out from BSES approved testing laboratory (CPRI/ERDA) to prove the quality of product and general conformity of the material to this specification in the presence of BSES's representative. These tests shall be carried out on samples prior to commencement of commercial production against the order. The Manufacturer shall indicate his schedule for carrying out these tests in the activity schedule. BSES reserves the right to specify the name of the laboratory also, if so felt. All kind of expenses for type test shall be borne by manufacturer.
5.1.2	Acceptance Test means those tests which are to be carried out on samples of covered conductor taken from each lot offered for pre-dispatch inspection, for the purpose of acceptance of that lot. These tests shall be carried out at the manufacturer's works in presence of BSES's representative before the dispatch of the materials to the site/BSES store with in Delhi.
5.1.3	Routine Test means those tests which are to be carried out on each strand/spool/length of the covered conductor to check requirements, which are likely to vary during production. These tests shall be carried out by the manufacturer on each drum and shall have to furnish the reports to the BSES's representative during his visit for acceptance tests or/and on requirement of BSES.
5.1.4	Tests during manufacturing means those tests which are to be carried out during the process of manufacturing and end inspection by the manufacturer to ensure the desired quality of the end product to be supplied, including all quality control checks & raw material testing.

5.1.5	For all type and acceptance tests, the acceptance values shall be the values guaranteed by the Bidder in the "Guaranteed Technical Particulars ", of their proposal or the acceptance value specified in this specification, whichever is more stringent for that particular test.
5.1.6	BSES reserves the right to visit the plant and can review the manufacturing process as well as quality any time during manufacturing till delivery without any prior intimation to manufacturer.

5.2 TYPE TESTS

Bidder shall submit the Type test reports of AAAC AL-59 Dog and Goat conductor along with the type test reports of Accessories as mentioned in this specification during the submission of technical bid.

5.2.1	All the product including accessories must be of type tested quality from CPRI/ ERDA. Type test reports shall be submitted for the type, size and rating of all the products offers in the bid. BSES reserves the right to conduct type test from BSES PO for which the cost shall be borne by the bidder without any cost implication to BSES. Type tests shall be as per EN 50397-1: 2006 and its latest amendments.

5.3 ACCEPTANCE TESTS

Covered Conductor		
5.3.1	Visual and dimensional check on drum	SS 4240814 and IS: 398(Part IV) 1994/Relevant with latest Amendment.
5.3.2	Visual check for joints, scratches etc. and lengths of conductor	SS 4240814 and IS: 398(Part IV) 1994/Relevant with latest Amendment.
5.3.3	Dimensional check on Aluminium strands	SS 4240814 and IS: 398(Part IV) 1994/Relevant with latest Amendment.
5.3.4	Conductor Resistance test at 20˚C	EN 50397-1-2006
5.3.5	Volume Resistivity	EN 50397-1-2006
5.3.6	High Voltage test	EN 50397-1-2006

5.3.7	Leakage current test	EN 50397-1-2006
5.3.8	Tracking Resistance test	EN 50397-1-2006
5.3.9	Test for thickness of insulation, semicon and outer layer	EN 50397-1-2006
5.3.10	Dimension for insulation and layer	EN 50397-1-2006
5.3.11	Tensile and elongation at break of Insulation and outer layer	EN 50397-1-2006
5.3.12	Hot set test for insulation and outer layer	EN 50397-1-2006
5.3.13	UV test of outer layer from NABL approved lab	EN 50397-1-2006
5.3.14	Water Penetration test	EN 50397-1-2006
5.3.15	Water absorption test	EN 50397-1-2006
5.3.16	Check for lay ratio of various layers.	EN 50397-1-2006
5.3.17	Breaking load test on aluminum strands.	EN 50397-1-2006
5.3.18	Wrap test on aluminum strands.	EN 50397-1-2006
5.3.19	UTS test on welded joint of aluminum strand	As per this specification
5.3.20	Stress Strain test surface condition test	EN 50397-1-2006
5.3.21	Chemical analysis of Aluminium	EN 50397-1-2006
5.3.22	Chemical analysis of Outer layer	EN 50397-1-2006

5.3.23	Eccentricity check of insulation	IS 7098-2
5.3.24	Ageing in air oven of insulation and outer layer	SS 4240814 and IS: 398(Part IV) 1994/Relevant with latest Amendment.
5.3.25	Drum Rewinding	Factory Standard
5.3.26	Cable end sealing	Factory Standard
5.3.27	Drum Stenciling	Factory Standard
5.3.28	Carbon Black Content	EN 50397-1-2006
Accessories		
5.3.29	Visual Examination	EN 50397-2
5.3.30	Dimensional and material verification	EN 50397-2
5.3.31	Marking	EN 50397-2
5.3.32	Tensile test	EN 50397 -2

All above tests shall be carried out after stranding only.

5.4 ROUTINE TESTS

Physical Tests	
5.4.1	Check ensures that the joints are as per specifications.
5.4.2	Check that there are no cuts, fins etc. on the strands.
5.4.3	Check that drums are as per specification.

Electrical Tests	
5.4.4	High Voltage test
5.4.5	Conductor resistance test
Routine Tests on Accessories	
5.4.6	Routine tests on accessories are intended to prove conformance of fittings to specific requirements and are made on every fitting. Routine tests on accessories shall be as per SS EN 50397-2.

Test results from the above tests must appear in the documents forwarded by the vendor for inspection call.

5.5 TESTS DURING MANUFACTURING

5.5.1	Chemical analysis of Aluminium used for making Aluminium strands	As per relevant standard
5.5.2	Anti tracking test on each drum length	As per EN 50397-1:2006

Test report of the same shall be submitted to BSES.

5.6 TESTING CHARGES

5.6.1	The testing charges for the type tests specified and as per relevant standard shall be borne by the bidder. All the manufacturers irrespective of quantity allotted to them, will have to carry out the Type Tests at their own cost and BSES will not have any bearing on this account. The type test reports shall not be older than 5 yrs and shall be valid till the validity of offer
5.6.2	In case of failure in any of the type tests, the manufacturer is required to modify the design of the material if required and repeat the particular type test and same shall pass within three times at his own expenses. The decision of the BSES in this regard shall be final. BSES at its own desecration may also cancel the order at the risk and cost of the manufacturer if the

	material fails twice in the type test.
5.6.3	Type test shall be done from CPRI/ERDA. Ensure that the tests can be completed in these laboratories within the time schedule guaranteed by them in the appropriate schedule. BSES reserves the right to specify the name of the laboratory also, if so felt.
5.6.4	The entire cost of testing for the acceptance and routine tests and tests during manufacture specified herein shall be treated as included in the quoted unit price of conductor.

5.7 ADDITIONAL TESTS

BSES reserves the right of getting done any other test(s) of reasonable nature carried out at Manufacturer's premises, at site, or in any other place/ third party lab in addition to the aforesaid type, acceptance and / or routine tests to satisfy with the fact that the material comply with the specifications. In such case all the expenses will be to Manufacturer's account.

5.8 SAMPLE BATCH FOR TYPE TESTING

5.8.1	The Manufacturer shall offer at least three (3) drums for selection of samples required for conducting all the type tests. BSES reserves the right to choose drums.
5.8.2	The Manufacturer is required to carry out all the acceptance tests and anti tracking test successfully in the presence of BSES representative in their manufacturing facility before dispatch of the selected sample to the testing laboratory for type test.

5.9 TEST REPORTS

5.9.1	Soft copies of type test reports shall be furnished through mail only. BSES may ask original type test report to verify soft copy. BSES will not receive any hard copy for their office record. BSES will give final dispatch clearance after validating type test report.
5.9.2	Record of routine test reports shall be maintained by the Manufacturer at their works for periodic inspection by the BSES's representative and shall be reviewed during inspection.

5.9.3	Test Certificates of tests done during manufacturing shall be maintained by the Bidder. These shall be produced for verification as and when desired by the BSES.

6.0 INSPECTION

6.0.1	BSES representative shall at all times be entitled to have access to the works and all places of the manufacturer where covered conductor shall be manufactured and the representative shall have full facilities for unrestricted inspection of the Manufacturer's works, raw materials, store process and process of manufacture and conducting necessary tests as may be deemed fit, for certifying the quality of product.
6.0.2	The Manufacturer shall keep BSES informed in advance of the time of starting and of the progress of manufacturing of covered conductor in its various stages so that arrangements can be made for inspection.
6.0.3	No material shall be dispatched from its point of manufacture and works before it has been satisfactorily inspected, tested, and necessary dispatch instructions are issued in writing, except for the cases where waiver of Inspection is granted by BSES, and even in this case also, written dispatch instructions will be issued. Any dispatches before the issue of Dispatch Instructions in writing will be liable for rejection and non acceptance by the consignee.
6.0.4	The acceptance of any quantity of material shall in no way relieve the Manufacturer of any of his responsibilities for meeting all requirements of the specification, and shall not prevent subsequent rejection if such material is later found to be defective.
6.0.5	At least 10% of the total number of drums subject to minimum of two in any lot put up for inspection shall be selected at random to ascertain the length of conductor.
6.0.6	The sample cut from any numbers of drums for carrying out any type of tests will be to the manufacturers account.
6.0.7	Anti Tracking test on one sample of each offered lot shall be conducted from 3rd party lab (accredited by both BIS and NABL), cost shall be borne by the manufacturer.

6.0.8	Only soft copy of inspection report shall be furnished by manufacturer through mail. BSES shall not receive any hard copy of report for their office record.

7.0 QUALITY ASSURANCE PLAN

7.1 The bidder shall invariably furnish following information along with his offer, failing which his offer shall be rejected.

7.1.1	Statement giving list of important raw materials names of sub manufacturers for the raw materials, list of standards according to which the raw materials are tested, list of tests normally carried out on raw materials in presence of manufacturer's representative and as routine and / or acceptance during production and on finished goods, copies of test certificates.
7.1.2	Information and copies of test certificates as in mentioned above in respect of bought out accessories.
7.1.3	List of manufacturing facilities available.
7.1.4	Level of automation achieved and list of areas where manual processing exists.
7.1.5	List of areas in manufacturing process, where stage inspections are normally carried out for quality control and details of such tests and inspections.
7.1.6	List of testing equipment available with the Manufacturer for final
7.1.7	Testing of Covered Conductor to be specified. In the case if the manufacturer does not possess all the Routine and Acceptance testing facilities, the bid / PO shall be rejected.
7.1.8	BSES reserves the right for factory inspection to verify the quoted offer. If any of the facts are found to be misleading or incorrect the offer of that Bidder will be out rightly rejected and he may be black listed.
7.1.9	Special features provided to make it maintenance free.

7.2 The bidder shall also submit following information to the BSES along with the technical Bid.

7.2.1	List of raw materials as well as bought out accessories, and the name of manufacturers of raw materials as well as bought out accessories.
7.2.2	Type test certificates of the raw material and bought out accessories.
7.2.3	Quality assurance plan (QAP) with hold points for BSES's inspection.

7.3 The Manufacturer shall submit the routine test certificates (only soft copy through mail) of all the bought-out items, accessories etc.

NOTE: Final QAP shall be approved by BSES.

8.0 DOCUMENTATION

Submission of drawings, calculations, catalogues, manuals, test reports shall be as mentioned below:

8.0.1DRAWING, DATA AND MANUALS

Cross-Sectional drawing shall show every feature of construction, including the thickness/ diameter over every layer. This drawing shall also state the text to be embossed over the outer insulation layer i.e. type/ size etc. of the conductor, drum no./ lot no., sequential length marking over every meter, font sizes to be used, additional text if any etc. Also drum detail markings to be made on both sides of the drum.

8.0.2 DOCUMENTS TO BE SUBMITTED ALONG WITHBID FOR TECHNICAL JUSTIFICATION

Document/Drawing submission shall be as per the matrix given below:

a. All documents/drawings shall be provided in soft copy only in returnable Pen drives
b. Language of the documents shall be English only.
c. Incomplete submission shall be liable for rejection.
d. Document check sheet compliance shall be the first sheet for each submission stage i.e. Technical bid, Drawing Approval, Pre Dispatch, Pre closure
e. No submission is acceptable without check list compliance.

f. Deficient/ improper document/ drawing submission shall be liable for rejection.

g. Order of documents shall be strictly as per the check list.

h. Any document not included in the below table but necessary for detailed engineering shall be deemed to be included in bidder's scope

S.No.	Detail of Document	For Tender	For Approval/Review	Final Submission
1	Guaranteed Technical Particulars (GTP)	Required	Required	Required
2	Deviation Sheet, if any	Required	Required	Required
3	Detailed cross sectional drawing of cable and drum	Required	Required	Required
4	Installation Instructions		Required	Required
5	Manual/Catalogue	Required	Required	Required
6	Cable de-rating factors		Required	Required
7	Type test reports of offered type and rating of cable	Required	Required	Required
8	BIS certificate	Required		
9	Make of Raw Materials	Required	Required	Required
10	Inspection and test reports, carried out in manufacturer's works			Required
11	Routine Test Certificates			Required
12	Test certificates of all the raw materials			Required

- The manufacturing of the conductor shall be strictly in accordance with the approved drawings and no deviation shall be permitted without the written approval of the BSES. All manufacturing and fabrication work in connection with the conductor prior to the approval of the drawing shall be at manufacturer's risk.

Approval of drawing etc. by the BSES shall not relieve the Manufacturer of his responsibility and liability for ensuring correctness and correct interpretation of the latest revision of applicable standards, rules and codes of practices. The conductor shall conform in all respects to high standards of engineering, design, workmanship and latest revisions of relevant standards at the time of ordering and BSES shall have the power to reject any work or material which in his judgment is not in full accordance therewith.

9.0 PACKING & FORWARDING

9.1	The conductor shall be supplied in **non-returnable steel drums** only	
9.2	The drums shall be suitable for wheel mounting and for jetting off the conductor under a minimum controlled tension of the order of 5 KN.	
9.3	The bidder should submit the proposed drum drawings along with the bid. However, the same shall be in line with the requirements as stated herein.	
9.4	Both the ends of the conductor shall be properly sealed to prevent any deterioration of the conductor, due to ingress of water, etc.	
9.5	Shipping Information	The seller shall give complete shipping information concerning the weight, size of each package
9.6	Transit damage	The seller shall be responsible for any transit damage due to improper packing
9.7	Cable Drum handling	The drums shall be with MS spindle plate (with nut-bolts) of adequate size to suit the spindle rods, normally required for handling the drums, according to expected weight of the cable drums.
9.8	Markings	• Drum identification number • Conductor type • Conductor length (meter)

		• PO number and date • SAP item code • Total weight of cable and drum • Manufacturer's name • Buyer's name • Month and year of manufacturing • Direction of rotation of drum • Conductor length final end markings (i.e. reading at inner end reading at the outer end, just before packing shall be marked on the drum)
9.9	Delivery Schedule	• Delivery period Start Date : From date of LOI / LOA • Delivery period End Date : As agreed with manufacturer • Material dispatch Clearance : After inspection by purchaser
9.10	Accessories	• Accessories shall be packed separately item wise with proper protection to prevent damage and easy handling. • Marking • Material description • Type • Dimension • PO number and date • SAP item code • Total weight of • Manufacturer's name • Buyer's name • Month and year of manufacturing • Storage type

10.0 DEVIATIONS

a) Deviations from this specification shall be listed separately by bidder clause wise (format given below) along with optional offer and has to submit the list along with bid/quotation. BSES will review the deviations and if BSES is agreed with the deviation, seller has to take written confirmation from BSES on deviation during tender evaluation.

b) In the absence of any separate list of deviations from the bidders with bid as well as written confirmation from BSES on deviations, it will be assumed by the Buyer that the Seller complies with the Specification fully.

c) Any deviations mentioned in any other submitted bid documents (i.e.in filled GTP, Catalog, BSES old approval, buyer's/seller's standards etc) by seller without separate deviation sheets will not consider as a deviation from this tech spec at any stage of contract.

Deviation Sheet Format-

Sino	Document Name	Clause No.	Deviation	Reason	Merits to BSES

ANNEXURE-A GUARANTEED TECHNICAL PARAMETERS

Note:

1) Every data shall be mentioned.
2) Seller may submit separate GTP for the cable, as suitable.
3) GTP shall be read in line with purchaser's Project Site Specific Requirement.

S.No	Description	AL59 DOG	AL59 GOAT
1	Guarantee Period	60 months from date of commissioning / 66 months (from date of receipt at purchaser's store) whichever is earlier	

S.No	Description	AL59 DOG		AL59 GOAT	
2	Standard according to which the conductor will be manufactured and tested	SS EN4240814 SS EN 4240813 SS EN 50397-1			
3	Quality of material & standard to which conform	SS EN 42 40814 & IS-9997			
4	Type of covered conductor	AAAC (AL-59) Covered Conductor			
5	Number of strands and wire diameter in mm	7/4.72 mm		37/3.71mm	
6	Number Of Strands – Nos.	7		37	
7	Diameter Of Strand – mm. I) Strands a) Nominal	4.72		3.71	
	b) Maximum	4.77		3.75	
	c) Minimum	4.67		3.67	
	II) Overall Of Conductor	14.16		25.97	
8	Nominal Cross Sectional Area (mm^2) Of- a) Whole Conductor b) Each Strand	122.5 17.50		400 10.81	
9	Laying Of Strands – Nos.	**Max**	**Min**	**Max**	**Min**
	a) Centre wire				
	b) First Layer	14	12	14	12
	c) Second Layer	-	-	13	11

S.No	Description	AL59 DOG		AL59 GOAT	
	d) Third Layer	-	-	13	11
	e) Fourth Layer	-	-	-	-
10	Weight (Excl. Wt. Of Grease) – Kg/Km. a) Whole Conductor	As per Manufacturer			
	b) Strand (At Nominal Dia.)	As per Manufacturer			
11	Calculated D.C. resistance at 20°C (Ω/Km) (Max.) a) Whole Conductor	0.2400		0.07411	
	b) Strand	1.66		2.69	
12	Ultimate Tensile Stress – KN a) Whole Conductor	28.2		96	
	b) Strand i) Before Stranding	4.02		2.59	
	ii) After Stranding	3.82		2.46	
13	Modulus of Elasticity –MPA	As per Manufacturer			
14	Coefficient of linear expansion – per deg. C.	$23.0x10^{-6}$		$23.0x10^{-6}$	
15	Chemical Composition	The wire material shall be AL59 Aluminium alloy meeting the requirements on Resistivity, tensile strength, DC resistance etc.			
16	Resistivity – Ω mm^2 / Mtr.				
17	a) Continuous minimum current rating of conductor in still air at ambient Temperature (40˚C)	375 A		828 A	
	b) Temperature rise for the above 55˚C	55		55	

S.No	Description	AL59 DOG	AL59 GOAT
18	Minimum continuous current rating of conductor at 95˚C corresponding of ambient temperature of 50˚C	375 A	828 A
19	Lay Ratios a) First Layer i) Maximum ii) Minimum	 14 12	 14 12
	b) Second Layer i) Maximum ii) Minimum	NA	13 11
	c) Third Layer i) Maximum ii) Minimum	NA	13 11
	d) Fourth Layer i) Maximum ii) Minimum	NA	NA
20	Minimum tensile strength of the finished strand with joint if any made in base rod or semi finished wire a) Aluminium Alloy	Min. 90% of wire before stranding	Min. 90% of wire before stranding
21	Conductor Screen		
	Material	Extruded semi-conducting layer (As per Cl. 4.8)	
	Nominal thickness (mm)	0.3	0.3

S.No	Description	AL59 DOG	AL59 GOAT
22	Insulation inner layer	(As per Cl. 4.9)	
	Material	TR-XLPE	TR-XLPE
	Nominal thickness (mm)	1.2	2.43
23	Insulation outer layer	(As per Cl. 4.10)	
	Material	UV stabilized, weather resistant and tracking resistant Black XLPE with UV RESISTANT,NON TRACKING & EROSION RESISTANT (EN 50397-1)	
	Nominal thickness (mm)	1.1	1.2
24	Approx. overall diameter (mm)	As per Manufacturer	
25	Approx. weight (kg/km)	As per Manufacturer	
26	Max. continuous operating conductor temperature (˚C)	95	95
27	Embossing on Insulation outer layer	As per Clause 4.10.6	
28	Standard packing length	1000 ± 5%	1000 ± 5%

ANNEXURE-B MAKE LIST

S.No.	Raw Materials		Name of the Manufacturers
1.	TR-XLPE/XLPE Compound	1	Dow Chemicals , U.S.A.
		2	Borealis , Sweden

		3	Hanwha , South Korea
2.	Semi-Conducting Compound	1	Dow Chemicals, U.S.A.
		2	Borealis , Sweden
		3	Hanwha , South Korea
3.	Aluminium Rod	1	Bharat Aluminium Co. Ltd. (BALCO)
		2	Hindustan Aluminium Co. Ltd. (HINDALCO)
		3	National Aluminium Co. Ltd. (NALCO)
		4	Vedanta (Sesa Sterlite)

BSES

Technical Specification of

ACSR CONDUCTORS

(Insulated & Bare)

Specification no – BSES-TS-05-ACSR-R0

Rev:		0
Date:		04 Apr 2022
Prepared by	Abhishek Vashistha	
	Rohit Patil	
Reviewed by	Puneet Duggal	
	Amit Tomar	04.04.2022
Approved by	Gaurav Sharma	
	K. Sheshadri	04/04/22

Contents

1. SCOPE 3
2. CODES AND STANDARDS 3
3. DESIGN 3
4. QUALITY ASSURANCE 5
5. INSPECTION AND TESTING 5
6. EMBOSSING & PRINTING 7
7. APPROVED VENDORS & SUPPLIERS OF RAW MATERIAL 7
8. DOCUMENT SUBMISSION MATRIX 7
9. ANNEXURE - I 8
10. ANNEXURE - II 10

1. SCOPE

1.1 This specification covers the design, manufacture, testing at manufacturer's works, packing and delivery at site of the ACSR conductor along with necessary accessories.

1.2 The conductor and its accessories shall be complete with all fittings and components necessary for the effective working and efficient performance and satisfactory maintenance under the various operating conditions specified. All such parts shall deemed to be included within the scope of supply where specifically included or not in this specification in the tender schedule. The successful bidder shall not eligible for any extra charge for such accessories.

1.3 The specification includes both insulated & un-insulated ACSR conductor. Following table suggest requirement of conductors under insulated & un-insulated type as per tender enquiry

Conductor name	Zebra	Goat	Panther	Wolf	Dog	Rabbit	Squirrel
Insulated	X	X	X	X	√	√	√
Un-Insulated	√	√	√	√	√	√	√

2. CODES AND STANDARDS

2.1 All equipment and material shall be designed, manufactured and tested in accordance with the latest applicable Indian Standard, IEC standard and CBIP manuals enlisted in the appendix 1, except where modified and / or supplemented by this specification.

2.2 Equipment and material confirming to any other standard, which ensures equal or better quality, may be accepted. In such case copies of English version of the standard adopted shall be submitted by the vendor with the offer

2.3 The electrical installation shall meet the requirement of Indian Electricity Rules as amended up to date; relevant IS code of practice and Indian electricity act. In addition other rules & regulations applicable to the work shall be followed. In case of any discrepancy the most stringent & restrictive one shall be binding.

2.4 The equipment offered shall in general comply with the latest issues including amendments of the standards enlisted in the appendix 1 but not restricted to it.

3. DESIGN

3.1 General

- All steel strands shall be smooth, uniform and free from all imperfections, such as spills and splits, die marks, scratches, abrasions and kinks after drawing and also after stranding.
- The finished material shall have minimum brittleness, as it will be subjected to appreciate vibration while in use.
- The steel strands shall be hot dip galvanized and shall have a maximum zinc coating of 240gms/sq.mm after stranding. The zinc coating shall be smooth, continuous of uniform thickness, free from imperfections and shall withstand three and a half dips after stranding in standard Price test.
- The steel wire rod shall be of such quality and purity that, when drawn to the size of the strands specified and coated with zinc, the finished strands shall be of uniform quality and have the same properties and characteristic as prescribed in relevant ASTM/IS/IEC standards.
- To avoid susceptibility towards wet storage stains (while rust), the finished material shall be provided with a protective coating of boiled linseed oil.
- The finished conductor shall have a smooth surface without any surface cuts, abrasions, scuff

marks and shall be free from dirt, grit etc.

- The Steel wire shall be made from materials produced either by the acid or basic Open Hearth process or by electric process. No steel wire drawn from 'Bessemer processes shall be used. The steel wire shall not contain sulphur or phosphorous exceeding 0.5% and the total of sulphur and phosphorous shall not exceed 0.085%.
- The steel strands shall be performed and post formed in order to prevent spreading of strands in the event of cutting of composite core wire. Care shall be taken to avoid damages to galvanization during performing and post forming operations.

3.2 MATERIALS

- The aluminium strands shall be hard drawn from electrolytic aluminum rods having a purity of not less than 99.5% and a copper content not exceeding 0.04%.
- The steel wire strands shall be drawn from high carbon steel wire rods produced by either the acid or basic open hearth process, the electric furnace process, or the basic oxygen process and shall conform to the following requirements as to the chemical composition:

Element	% composition
Carbon	0.50 to 0.85
Manganese	0.50 to 1.10
Phosphorus	Not more than 0.035
Sulphur	Not more than 0.045
Silicon	0.10 to 0.35

- The zinc used in galvanizing shall be electrolytic high grade zinc of 99.95% purity. It shall conform to and satisfy all the requirements of IS/IEC.

3.3 STANDARD LENGTH

- The standard length of the conductor shall be 3000 meters. A tolerance of +/-5% on the standard length offered by the Bidder shall be permitted. All lengths outside this limit of tolerance shall be treated as random lengths.
- Random lengths will be accepted provided no length is less than 70% of the standard length and the total quantity of such random length shall not be more than 10% of the total quantity ordered. When one number random length has been manufactured at any time, five (5) more individual lengths, each equivalent to the above random length with a tolerance of +/-5% shall also be manufactured and all the above six random lengths shall be dispatched in the same shipment. At any point, the cumulative quantity supplied including such random lengths shall not be more than 12.5% of the total cumulative quantity supplied including such random lengths. However, the last 20% of the quantity ordered shall be supplied only in standard lengths as specified.
- Bidder shall also indicate the maximum single length, above the standard length, he can manufacture in the guaranteed technical particulars of offer. This is required for special stretches like river crossing etc. The employer reserves the right to place orders for the above lengths on the same terms and conditions applicable for the standard lengths during the pendency of the Contract.

3.4 JOINT IN WIRES

- **Aluminium wires**
  No joints shall be permitted in the individual wires in the outer most layer of the finished conductor. However, joints in the 12 wire and 18 wire inner layer of the conductor shall be allowed but these joints shall be made by cold pressure butt welding and shall be such that no such way joints are within 15 meters of each other in the complete stranded conductor. The joints shall withstand a stress of not less than the breaking strength of individual strand guaranteed.

- **Steel Wires**
  There shall be no joint of any kind in the finished wire entering into manufacture of the non strand joint or strand splices in any length of the complete stranded steel core of the conductor.

3.5 INSULATON

S. No.	Particular	Data
1	Voltage Grade	1.1 kV
2	Insulation Material	XLPE
3	Nominal Thickness of Insulation	As per table 3 of IS 7098 P-1

4. QUALITY ASSURANCE

4.1 Vendor shall follow his standard procedures for quality assurance and control. These standard procedures including quality assurance plan shall be submitted to the purchaser for approval.

4.2 The procedures shall be in such a form as to clearly indicate the manufacturing sequence and major inspection points and to reference Bidder's test in inspection procedures.

4.3 Manufacturing and quality control procedures shall be available for audit to the Purchaser and / or its representatives at the place of manufacture.

4.4 The Purchaser and/or its representative reserves the right to inspect the equipment at the point of manufacture and witness factory and other such tests as may be necessary to ensure conformance to the specification.

4.5 The Purchaser and / or its representative shall inspect the Vendor facilities prior to award of contract.

4.6 The Purchaser and/or its representative may conduct surveillance of the Vendor facilities for compliance to his standard procedures of quality assurance and quality control while work is in progress.

5. INSPECTION AND TESTING

5.1 INSPECTION

- The purchaser's representative shall at all times be entitled to have access to the works and all places where conductor shall be manufactured and shall have full facilities for unrestricted inspection of the manufacturer works, raw materials and process of manufacture for conducting necessary tests as detailed herein.
- The manufacturer shall keep the Employer informed in advance of the time of starting and of the progress of manufacture of conductor in its various stages so that arrangements can be made for inspection.
- No material shall be dispatched from its point of manufacture before it has been satisfactory inspected and tested, unless the inspection is waived off by the purchaser in writing. In the latter

case also the conductor shall be dispatched only after satisfactory testing for all tests specified herein have been completed.

- The acceptance of any quantity of material shall in no way relieve the manufacturer of any of his responsibilities for meeting all requirements of the Specification and shall not prevent subsequent rejection if such material is later found to be defective.

5.2 TESTS

The following acceptance and routine tests and tests during manufacture shall be carried out on the conductor. For the purpose of this clause, the following shall apply

- Acceptance tests shall mean those tests which are to be carried out on samples taken from each lot offered for pre-dispatch inspection, for the purpose of acceptance of that lot.
- Routine tests shall mean those tests, which are to be carried out on each strand/spool/length of the conductor to check requirements which are likely to vary during production.
- Tests during manufacture shall mean those tests, which are to be carried out during the process of manufacture to ensure the desired quality of the end product.
- For all acceptance tests, the acceptance values shall be the values shall be the values guaranteed by the Bidder in the guaranteed technical particulars of his proposal or the acceptance value specified in this Specification, whichever is more stringent for that particular test.

5.3 **TYPE TESTS**

Supplier shall submit all Type test report with validity of 5 years, along with the bid. The entire test certificate as per relevant IS/IEC shall be submitted for purchaser review. In case type tests have not been conducted earlier the same has to be carried out without any cost implication to purchaser. Purchaser has the right of witnessing any of the tests for which the supplier has to give prior notice before the date of conducting such tests. The unit rates for each type of the tests to be carried out shall be indicated in the offer. Requirement of type test shall be as listed below. Type test charges shall not be included as part of main price to be indicated in the offer.

The following tests shall be performed on a typical length of conductor. The cost of these tests shall be quoted separately.

a) Surface condition test
b) Test for ultimate breaking load on stranded conductor
c) Stress strain test
d) Measurement of diameter of individual aluminium and steel wires.
e) Measurement of lay ratio.
f) Breaking load of individual wires
g) Ductility test
h) Wrapping test
i) Resistance test and
j) Galvanizing test

5.4 ACCEPTANCE TESTS

a) Visual and dimensional check by drum
b) Visual check for joints scratches etc and lengths of conductor by rewinding
c) Dimensional check on steel and Aluminium strands

d) Galvanizing test on steel strands
e) Torsion and elongation test on steel strands
f) Check for lay ratio of various layers
g) Breaking load test on steel and aluminium strands
h) Wrap test on steel and aluminum strands
i) DC resistance test on aluminium strands
j) UTS Test on welded joint of strands
k) Tensile test (For Aluminium)
l) Test for thickness of insulation
m) Tensile strength & elongation at break test for insulation
n) High voltage test
o) Insulation resistance (Volume resistivity) test

All above tests except (j-o) shall be carried out on aluminium and steel strands after stranding only.

5.5 ROUTINE TESTS

a) Check to ensure that the joints are as per Specification.
b) Check that there are no cuts, fins etc on the strands.
c) Check that drums as per Specification.
d) All acceptance test as mentioned above to be carried out on each coil

6. EMBOSSING & PRINTING

Following text shall be embossed on insulated conductor only

a) BSES, PO No. & Date, Manufacturing month & year, Type of Conductor- one each meter length
b) Printing of running meter No.- on each meter length- White colour

7. APPROVED VENDORS & SUPPLIERS OF RAW MATERIAL

S. No	Material	Approved Suppliers
1	Steel	TATA /SAIL
2	Aluminium	NALCO/BALCO/HINDALCO
3	Insulation	KLJ/KALPENA/DOW/HANWHA/BOREALIS

8. DOCUMENT SUBMISSION MATRIX

Document/Drawing submission shall be as per the matrix given below:

a. All documents/drawings shall be provided in soft copy only via mail or in returnable Pen drives
b. Language of the documents shall be English only.
c. Document check sheet compliance shall be the first sheet for each submission stage i.e. Technical bid, Drawing Approval, Pre Dispatch, Pre closure
d. No submission is acceptable without check list compliance.
e. Deficient/ improper or incomplete document/ drawing submission shall be liable for rejection.
f. Order of documents shall be strictly as per the check list.

g. Any document not included in the below table but necessary for detailed engineering shall be deemed to be included in bidder's scope

S No.	Detail of Document	Bid	Approval	Pre Dispatch
1	Guaranteed Technical Particulars (GTP)	Required	Required	
2	Deviation Sheet, if any	Required	Required	
3	Detailed cross sectional drawing of ACSR Conductor	Required	Required	
4	Dimensional drawing of drum	Required	Required	
5	Type test reports of offered type and rating of ACSR conductor	Required	Required	
6	BIS certificate	Required		
7	Complete cable catalogue	Required		
8	Make of Raw Materials	Required	Required	
09	Inspection test reports and Routine Test Certificates carried out in manufacturer's works			Required
10	Test certificates of all raw materials			Required
11	Calibration test reports of instruments			Required

9. ANNEXURE - I

CONDUCTOR DATA SHEET

S.N.	Particulars	Conductor Details						
1	Conductor Name	Zebra	Goat	Panther	Wolf	Dog	Rabbit	Squirrel
2	Stranding and wire diameter	54/3.18 mm Al. + 7/3.18 mm Steel	30/3.71 mm Al. + 7/3.71 mm Steel	30/3.0 mm Al. + 7/3.0 mm Steel	30/2.59 mm Al. + 7/2.59 mm Steel	6/4.72 mm Al. + 7/1.57 mm Steel	6/3.35 mm Al. + 1/3.35 mm Steel	6/2.11 mm Al +1/2.11 mm Steel
3	Number of strands							
3a	Core	1	1	1	1	1	1	1
3b	1st layer	6	6	6	6	6	6	6
3c	2nd Layer	12	12	12	12	6	--	--
3d	3rd layer	18	18	18	18	--	--	--
3e	4th Layer	24	--	--	--	--	--	--
4	Sectional	428.9 Sq.	324.30	212.10	158.10	105.00	52.88 Sq.	20.98 Sq.

	Area of Aluminum	mm	Sq. mm	Sq. mm	Sq. mm	Sq. mm	mm	mm
5	Total Sectional Area	484.5 Sq. mm.	400.00 Sq. mm	261.50 Sq. mm	194.90 Sq. mm	118.50 Sq. mm	61.70 Sq. mm	24.48 Sq. mm
6	Overall Diameter	28.62 mm	25.97 mm	21.00 mm	18.13 mm	14.15 mm	10.05 mm	6.33 mm
7	Approx. Weight							
7a	Aluminum	1186 kg/Km	878 kg/Km	587 kg/Km	428 kg/Km	287 kg/Km	145 kg/Km	58 kg/Km
7b	Steel	435 kg/Km	610 kg/Km	387 kg/Km	298 kg/Km	107 kg/Km	69 kg/Km	27 kg/Km
7c	Total	1621 kg/Km	1488 kg/Km	974 kg/Km	726 kg/Km	394 kg/Km	214 kg/Km	85 kg/Km
8	Calculated DC resistance at 20°C	0.06868 Ohm/Km	0.09106 Ohm/Km	0.13900 Ohm/Km	0.18710 Ohm/Km	0.27920 Ohm/Km	0.55240 Ohm/Km	1.39400 Ohm/Km
9	Minimum UTS	130.32 KN	137.00 KN	89.67 KN	67.34 KN	32.41 KN	18.25 KN	7.61 KN

Lay Ratio of Aluminum Conductors, Steel Reinforced

S. No.	**Conductor**	**No. of wire**		**Ratio of Aluminum Wire Diameter to Steel wire Diameter**	**Lay ratio to Steel core (6 wire ratio)**		**Lay ratio for Aluminum wire**					
							Outermost Layer		**Layer immediately beneath Outermost Layer**		**Innermost Layer of conductors with 3 Aluminum wire Layers**	
		Aluminum	Steel		Min	Max	Min	Max	Min	Max	Min	Max
1	Zebra	6	1		-	-	10	14	-	-	-	-
		6	7		13	28	10	14	-	-	-	-
		30	7		13	28	10	14	10	16	-	-
		42	7		13	28	10	14	10	16	10	17
		54	7		13	28	10	14	10	16	10	17

Diameter of Aluminum & Steel Strands

S. No.	Conductor Name	Aluminum			Steel		
		Nominal	Maximum	Minimum	Nominal	Maximum	Minimum
1	Zebra	3.18	3.21	3.15	3.18	3.24	3.12
2	Goat	3.71	3.74	3.68	3.71	3.76	3.65
3	Panther	3.00	3.03	2.97	3.00	2.94	2.06
4	Wolf	2.59	2.62	2.56	2.59	2.64	2.54
5	Dog	4.72			1.57		
6	Rabbit	3.35	3.32	3.38	3.35	3.42	3.28
7	Squirrel	2.11	2.13	2.9	2.11	2.15	2.07

10. ANNEXURE - II

VENDOR DATA (GURANTEED TECHNICAL PARTICULARS)(SEPARATE DATA SHEET SHALL BE SUBMITTED FOR EACH TYPE OF CONDUCTOR)

SI.NO.	DESCRIPTION	BSES Requirement	PARTICULARS
1	Name of the material offered	XLPE Insulated ACSR Conductor	
2	Maker's Name	Required	
3	Address and Phone No.		
4	Reference Standards	IS-398Pt-1, IS 1778 , IS 7098	
5	No.of strands/diameter of Galvanised steel wire/Al strand	Required	
6	Apporx.Dia over covered conductor		
7	Minimum Ultimate Tensile Strength of Conductor	18.25	
8	Direction Of Lay	Successive layers shall have opposite directions of lay outermost layer being Right Handed	
9	Lay ratio of Aluminum wire		
10	Continuous max. current rating of ACSR	Required	
	Conductor in still air at an ambient		
	temperature at 45 Deg C		
11	Temperature rise for the above current	Required	
12	Short Circuit current rating of ACSR	Required	
	Conductor for 1sec		
13	Module of elasticity of complete	79	

	Conductor		
14	Coefficient of linear expansion of	19.1x10^6	
	complete conductor		
15	Cross sectional area	Required	
16	Nominal aluminium area	Required	
16.1	Conductivity and Grade of Al	61% EC Grade	
16.2	% Composition of steel wire	As Per spec	
17	Chemical composition certificate from NABL approved lab	Required	
18	Minimum breaking load		
18.1	Aluminum strand (After Stranding)	Required	
18.2	Galvanised steel wire (After Stranding)	Required	
19	Total Conductor	Required	
20	Max.Working tension of conductor	75% of UTS	
21	Resistance of Al conductor at 20Deg	Required	
	C(Max)		
22	Weight		
22.1	Aluminium strand	Required	
22.2	Steel Strand	Required	
22.3	Conductor without insulation	Required	
22.4	Conductor with insulation	Required	
23	Purity of AL.rod in %age	Required	
24	Zinc coating on steel wire		
24.1	Grade of Zinc	Electrolytic High Grade Zinc not less Than 99.95% purity as per IS209-1992	
24.2	Min wt of Zinc Coating	Required	
24.3	No.& duration of dips of Zinc coating (Before Stranding)	Required	
25	Type of Insulation	XLPE Type as per IS 7098	
25.1	Nominal thickness of XLPE insulation	1.6	
25.2	Min thickness of XLPE insulation	1.5	
25.3	Color of XLPE insulation	Black	
25.4	Tensile strength of Insulation (Min)	12.5	
25.5	Percentage elongation at break of Insulation(Min)	200	
25.6	Insulation resistance test (Volume resistivity) Min	1x10^14 at 27deg C 1x10^12 at 90deg C	

26	Chemical composition test certificate of XLPE insulation material	Required, shall be weather proof and have property of protection against ultraviolet light having 2.5% black carbon content	
27	Drum	Required	
27.1	Ref IS	IS-1778-1980	
27.2	Gross weight of drum including weight of Conductor	Required	
27.3	Standard length of each piece of Conductor	3Km	
27.4	Non standard length	length	
28	Order quantity tolerance	(+/-)2%	Yes/No
29	Embossing	Name of manufacturer, Manufacture year, Manufacturing month, Type of conductor, BSES, P.o no & date	

ANNEXURE -I

PRICE FORMAT

PART-A

ITEM DESCRIPTION	QTY	UoM	EX-WORKS RATE PER KM	UNIT FREIGHT	GST	UNIT LANDED	TOTAL LANDED COST
Supply of XLPE Insulated Dog conductor	50	KM					
Supply of XLPE Insulated Rabbit conductor	6	KM					
Supply of XLPE Insulated Squirrel conductor	6	KM					
CNDCTR,ACSR ZEBRA UNINSUL	2	KM					

PART-B

ITEM DESCRIPTION	QTY	UoM	EX-WORKS RATE PER KM	UNIT FREIGHT	GST	UNIT LANDED	TOTAL LANDED COST
CNDCTR,ACSR DOG;XLPE COVERED	80	KM					
CLMP,ELEC,TENSION CLMP	960	Nos					
TIE,POLYMERIC;12X160MM;NYLON	1520	Nos					
CNCTR,CBLE/CNDUIT,PIERCING;16/95 SQMM	160	Nos					
CNCTR,PI	80	Nos					
CNCTR,MECH,PIERCING;1IN;BARE TO CC	80	Nos					
APD,FAB SRC,MID SPAN CMPRSN JNT FOR AAAC	240	Nos					

CONTROLLED COPY

Reliance Energy
A Dhirubhai Ambani Enterprise

Specifications

Lightning Arrestor

(66 & 33 KV)

Specification no. : SP-LALU-01-R0

Prepared By		Reviewed By		Approved By		Revision	Date
Name	Sign.	Name	Sign.	Name	Sign.		
AAG		HPB		DG		0	29-Jan-2005

Index

1.0 General Specification…… 03-08

2.0 Annexure – A : Scope & Documentation……09-10

3.0 Annexure – B : Ambient Conditions……....11-11

4.0 Annexure – C1 : Guaranteed Tech. Particulars for 66KV Lightning Arrester.....12-14

5.0 Annexure – C2 : Guaranteed Tech. Particulars for 33KV Lightning Arrester…..15-17

6.0 Annexure – D : Recommended spares (Data by supplier)……18-18

General Specification

1.0.0 Codes & Standards

Materials, equipment and methods used in the manufacture of Lightning Arresters shall conform to the latest edition of following –

National Standards

Standard Code	Standard Description
	Indian Electricity Rules
	Indian electricity act
	CBIP manual
IS : 3070 – Part 3	Lightning Arresters for Alternating Current Systems
IS : 2071 - Part I	Method of high voltage testing
IS : 2629 - 1985	Recommended Practice for Hot-Dip Galvanizing of Iron and Steel
IS : 5621 - 1980	Hollow insulators for use in electrical equipment
IS : 6639 - 1972	Specification for Hexagon Bolts for Steel Structures

International Standards

Standard Code	Standard Description
IEC 60099-4-2001	Metal-Oxide Surge Arresters without gaps for AC Systems

Important Note :

In the event of direct conflict between various order documents, the precedence of authority of documents shall be as follows –

i. Specification including applicable codes, standards
ii. Guaranteed Technical Particulars (GTP)
iii. Approved Vendor Drawings

Sr. No.	Description	Requirement / Rating
2.0.0	**Design Features**	Common for both 66KV and 33 KV Lightning Arresters
2.1.0	Application	To be used for protection of transformers, circuit breakers and other sub-station equipment against lightning and switching surges.
2.2.0	Type of Lightning Arrester	Gap-less metal oxide type (ZnO Type).
2.3.0	Pressure relief device	Pressure relief device of class 40 KA shall be provided.
2.4.0	Accessories	Refer Annexure-A : Scope of Supply.
2.5.0	Mounting	LA mounting vertically on steel structures with insulating bases. Surge counters in weather proof enclosures suitable for mounting on structure of lightning arrester.
2.6.0	Line side Terminal Connectors	Suitable for ACSR Zebra/ Goat conductor (Refer GTP)
2.7.0	Ground Terminal Connectors	Suitable for 50x6 mm GS flat
2.8.0	Surge Counter	Non-resettable type
2.9.0	Name plate Marking	Following minimum information must be marked – i) Name of the manufacturer ii) Type and serial No. iii) Model No. iv) Rated voltage v) Max. continuous Operating Voltage vi) Nominal discharge current vii) Pr. Relief Class viii) Identification mark on each separately housed unit to enable it to be replaced in correct position after the multiunit arrester has been dismantled.
3.0.0	**Approved Make of Components**	Common for both 66KV and 33 KV Lightning Arresters
3.1.0	Insulators	JSI / WSI/ BHEL/ Modern/ Saravana

Sr. No.	Description	Requirement / Rating
4.0.0	**Testing & Inspection**	
4.1.0	Internal Test	Manufacturer shall carry out comprehensive inspection and testing during manufacture of the equipment.
4.2.0	Type test	The product must be of type tested quality. Type test reports shall be submitted for the type, size & rating of equipment offered along with bid. If the manufacturer's lab is accredited by govt./ authorised body then it shall be acceptable for type testing.
4.3.0	Routine test	As per relevant IS / IEC.
4.4.0	Acceptance test	As per relevant IS / IEC.
4.5.0	Test Witness	
4.5.1		The Buyer reserves the right to witness all tests specified on completed product.
4.5.2		The Buyer reserves the right to inspect the product at the Sellers works at any time prior to dispatch, to verify compliance with the specifications.
4.5.3		In-process and final inspection call intimation shall be given in advance to purchaser.
4.6.0	Tests on fitting and Accessories	As per Manufacturer's Standards and relevant IS / IEC.
5.0.0	**Drawing, Data & Manuals**	
5.1.0	To be submitted along with bid	The seller has to submit :
	i)	Tentative GA / cross sectional drawing of product showing all the views / sections.
	ii)	Detailed reference list of customers already using the offered product during the last 5 years with particular emphasis on units of similar design and rating.
	iii)	Completely filled GTP
	iv)	Deviations from this specification. Only deviations approved in writing before award of contract shall be accepted.
	v)	Details of manufacturer's quality assurance standards and program and ISO 9000 series or equivalent national certification.

Sr. No.	Description	Requirement / Rating
	vi)	Type test reports shall be submitted for the type, size & rating of product / equipment offered along with bid. In case the type test report for identical product is not available then type test report of nearby size/ rating shall be submitted for review. They shall be considered valid for 5 years from date of test performed on product /equipment.
	vii)	Complete product catalogue and Manual along with the bid.
	viii)	Recommended spare parts and consumable items for five years of operation with prices and spare parts catalogue with price list for future requirements
	ix)	Bill of material with make, model & quantity of items.
5.2.0	To be submitted after award of contract	The seller has to submit : for buyer's Approval (A) / Reference (R)
	i)	Program for production and testing (A)
	ii)	Guaranteed Technical Particulars (A)
	iii)	Calculations to substantiate choice of electrical, structural, mechanical component size / ratings (A)
	iv)	a) Detailed dimension drawing for all components, ge b) Drawings of major components (A) c) Rating and diagram plate (R)
	v)	Detailed loading drawing to enable the buyer to design and construct foundations (as applicable) (R)
	vi)	Transport / Shipping dimensions with weights (R)
	vii)	Detailed Bill of Materials for all fittings and accessories with their make, model & tag no. etc. (A)
	viii)	Detailed installation and commissioning instructions (R)
	ix)	Quality plan (A)
5.3.0	Submittals required prior to dispatch	The seller has to submit :
	i)	Inspection and test reports, carried out in manufacturer's works (R)
	ii)	Test certificates of all bought out items
	iii)	Operation and maintenance Instruction as well as trouble shooting charts/ manuals
5.4.0	Drawing and document sizes	Standard size paper A0, A1, A2, A3, A4
5.5.0	No of drgs. / Documents required at different stages	As per Annexure- A

Sr. No.	Description	Requirement / Rating
6.0.0	**Packing**	
6.1.0	Packing Protection	Against corrosion, dampness, heavy rains, breakage and vibration
6.2.0	Packing for accessories and spares	Robust wooden non returnable packing case with all the above protection & identification Label
6.3.0	Packing Identification Label	In each packing case, following details are required :
	i)	Individual serial number
	ii)	Purchaser's name
	iii)	PO number (along with SAP item code, if any) & date
	iv)	Equipment Tag no. (if any)
	v)	Destination
	vi)	Manufacturer / Supplier's name
	vii)	Address of Manufacturer / Supplier / it's agent
	viii)	Description and Quantity
	ix)	Country of origin
	x)	Month & year of Manufacturing
	xi)	Case measurements
	xii)	Gross and net weights in kilograms
	xiii)	All necessary slinging and stacking instructions
7.0.0	**Shipping, Handling & Storage**	
7.1.0	Shipping Information	The seller shall give complete shipping information concerning weight, size etc. of each package.
7.2.0	Shipping Constraints	The seller shall ascertain at an early date before the commencement of manufacture, any transport limitations such as weights, dimensions, road culverts, overhead lines, free access etc. from the manufacturing plant to the project site. Bidder shall furnish the confirmation that the proposed packages can be safely transported, as normal or oversize packages, upto the site. Any modifications required in the infrastructure and cost thereof in this connection shall be brought to the notice of the Purchaser.
7.3.0	Transit Damage	The seller shall be responsible for any transit damage due to improper packing.
7.4.0	Handling & Storage	Manufacturer's instructions shall be followed. Detail handling & storage instruction sheet / manual needs to be furnished before commencement of supply.

Sr. No.	Description	Requirement / Rating
8.0.0	**Quality Assurance**	
8.1.0	Vendor quality plan	To be submitted for purchaser approval
8.2.0	Inspection points	To be mutually identified & agreed in quality plan
9.0.0	**Progress Reporting**	
9.1.0	Outline Document	To be submitted for purchaser approval for outline of production, inspection, testing, inspection, packing, dispatch, documentation program
9.2.0	Detailed Progress report	To be submitted to Purchaser once a month containing
	i)	Progress on material procurement
	ii)	Progress on fabrication (As applicable)
	iii)	Progress on assembly (As applicable)
	iv)	Progress on internal stage inspection
	v)	Reason for any delay in total program
	vi)	Details of test failures if any in manufacturing stages
	vii)	Progress on final box up
	viii)	Constraints / Forward path
10.0.0	**Deviations**	
	i)	Deviations from this Specification are only acceptable where the Seller has listed in his quotation the requirements he can't or does not wish to comply with and the buyer has accepted in writing the deviations before the order is placed.
	ii)	In the absence of a list of deviations, it will be assumed by the Buyer that the Seller complies fully with this specification.

Annexure – A

1.0 Scope

Sr. No.	Description	Requirement / Rating
1.0.0	**Scope**	
1.1.0	Main Equipment	Design, manufacture, assembly & testing at manufacturer's works before dispatch, packing & delivery of Lightning Arresters rated up to 66 kV.
1.2.0	Accessories	
	i)	Supporting insulators for LA.
	ii)	Line terminal connectors.
	iii)	Surge counter with leakage current ammeter.
	iv)	Grounding terminal bracket
	v)	Necessary flanges alongwith all stainless steel hardware like nut bolts/ washers etc. for mounting of LA & surge Counter
	vi)	Suitably sized Cu flat or insulated copper cable for connection between LA and surge counter
	vii)	Any other item necessary or usual for efficient performance and satisfactory maintenance under the various operating and atmospheric conditions
1.3.0	Documentation	Submission of all drawings & documents pertaining to the equipment.
1.4.0	Site Supervision	Supervision of testing & commissioning of equipment at site.
1.5.0	Bill of Materials	Complete bill of materials shall be submitted in the following format.

Sr. No.	Purchaser Equipment Tag No. / Sap Code	Equipment Description	Location / Substation Name	Unit	Quantity
			e.g. Santacruz	Nos.	e.g. 1
			e.g. Alaknanda	Nos.	e.g. 6

2.0.0 Document Submission

Submission of drawings, calculations, catalogues, manuals, test reports shall be as follows :

Item Description	Along with offer	For Approval after award of contract	Final after approval	Remarks
Drawings	3 copies (Typical drgs)	4 copies + 1 Soft Copy	6 copies + 1 soft copy in CD	See Clause 5.0.0 for various drawings required
Calculations	3 copies (Typical)	4 copies + 1 Soft Copy	6 copies + 1 soft copy in CD	See Clause 5.0.0 for details
Catalogues	1 copy		6 copies + 1 soft copy in CD	
Instruction manual	1 copy		6 copies + 1 soft copy in CD	
Test Report	2 copies		6 copies + 1 soft copy in CD	Type test and routine test reports

3.0.0 Delivery Schedule

Sr. No.	Description	Requirement / Rating
i)	Delivery period start date	From date of purchase order
ii)	Delivery period end date	As agreed with supplier
iii)	Material dispatch clearance	After inspection by purchaser

Annexure – B

Ambient Conditions :

A) Mumbai

a)	Average grade atmosphere	Heavily polluted , salt Laden, dusty, humid with possibility of condensation
b)	Maximum altitude above sea level	1000 M
c)	Ambient Air temperature	Highest 45 deg C, Average 35 deg C
d)	Minimum ambient air temperature	20 deg C
e)	Relative Humidity	100 % Max
f)	Thermal Resistivity of Soil	150 Deg. C cm/W
g)	Seismic Zone	3
h)	Rainfall	3000 mm concentrated in four months

B) Delhi

a)	Average grade atmosphere	Heavily polluted, dry
b)	Maximum altitude above sea level	1000 M
c)	Ambient Air temperature	Highest 50 deg C, Average 40 deg C
d)	Minimum ambient air temperature	0 Deg C
e)	Relative Humidity	100 % Max
f)	Thermal Resistivity of Soil	150 Deg. C cm/W
g)	Seismic Zone	4
h)	Rainfall	750 mm concentrated in four months

Annexure – C1

Guaranteed Tech. Particulars for 66KV Lightning Arrester

Sr. No.	Description	Data By Purchaser	Data by Supplier
1	Name of manufacturer		
2	Type	Gapless, ZnO type, single pole, heavy duty, station class, pedestal mounted	
3	Model		
4	No. of units.		
5	Installation	Outdoor	
6	Application	Protection of Transformers, circuit breakers, lines and other outdoor S/S equipment.	
7	LA connection to system	Phase to earth	
8	Type of Conductor	ACSR Zebra / Goat	
9	Construction	Single Phase	
10	Rated voltage of arrester (KVrms)	60 KV	
11	Nominal discharge current (Amps) (8x20 micro sec. wave) peak value	10KA	
12	System Particulars		
i)	Highest System Voltage	72.5 KV	
ii)	Frequency	50HZ ± 5%	
iii)	System neutral	Solidly earthed	
iv)	Max. value of temporary over voltage & its max. duration		
	- Insulation level of equipment to be protected	325 KVp	
	- System short circuit level	31.5KA for 3 seconds.	
13	Maximum continuous operating voltage (MCOV)	52KV	
14	Impulse withstand current	100KAp	
15	Long Duration discharge class	3	
16	Minimum single impulse energy capability		
17	Maximum residual voltage at switching impulse current of 1KAp (30/60 micro sec. wave)	136 KVp	

Sr. No.	Description	Data By Purchaser	Data by Supplier
18	Max. residual voltage (1x20 micro sec. wave)		
i)	At 05 KAp		
ii)	At 10 KAp		
iii)	At 20 KAp		
19	Minimum creepage distance	31 mm/KV	
20	Pressure relief class	40KA	
21	Reference current (mA)		
22	Leakage current at COV (mA)		
	Resistive		
	Capacitive		
23	Dry and wet power frequency withstand voltage of arrester insulation (KVrms)		
24	Virtual steepness for front of wave for above (KV/micro sec.)		
25	Ratio of system voltage withstand level to protection level of surge arrester		
26	High current impulse withstand 4/10 micro second peak value (KV)		
27	Long duration current Impulse		
i)	Current peak.		
ii)	Virtual duration.		
28	Temporary Over Voltage Capacity (KVp)		
i)	At 0.1 Sec.		
ii)	At 1.0 Sec.		
iii)	At 10.0 Sec.		
iv)	At 100.0 Sec.		
29	Weight of complete unit (Kg)		
30	Height of complete unit from base to the line side (mm)		
31	Minimum recommended spacing between arresters Centro to Centro (mm)		
32	Clearance required from ground equipment at various heights of arresters unit (mm)		

Sr. No.	Description	Data By Purchaser	Data by Supplier
33	Earthing arrangement provided for earthing side of arresters.		
34	Mounting flanges dimensional details.		
35	Type and range of milli-ampere meter.		
36	Type and specifications of the surge connecters.		
37	Surge counter min. current for recording a lightning stroke	200 Amp	
38	Surge counter max. disch. Current withstand	100KA peak for 4/10 wave shape.	
39	Range of continuous leakage current at rated voltage with variation due to change in temperature & frequency		
40	Size and length of flexible Cu cable for connection between LA & surge counter		
41	Voltage time curve for thermal stability of LA after a stroke	To be provided	
42	Paint shade of surge counter housing	Polyurethane, 692 of IS-5	

Annexure – C2

Guaranteed Tech. Particulars for 33KV Lightning Arrester

Sr. No.	Description	Data By Purchaser	Data by Supplier
1	Name of manufacturer		
2	Type	Gapless, ZnO type, single pole, heavy duty, station class, pedestal mounted	
3	Model		
4	No. of units.		
5	Installation	Outdoor	
6	Application	Protection of Transformers, circuit breakers, lines and other outdoor S/S equipment.	
7	LA connection to system	Phase to earth	
8	Type of Conductor	ACSR Zebra / Goat	
9	Construction	Single Phase	
10	Rated voltage of arrester (KVrms)	30 KV	
11	Nominal discharge current (Amps) (8x20 micro sec. wave) peak value	10KA	
12	System Particulars		
i)	Highest System Voltage	36 KV	
ii)	Frequency	50HZ ± 5%	
iii)	System neutral	Solidly earthed	
iv)	Max. value of temporary over voltage & its max. duration		
	- Insulation level of equipment to be protected	170 KVp	
	- System short circuit level	26.3KA for 3 seconds.	
13	Maximum continuous operating voltage (MCOV)	25KV	
14	Impulse withstand current	100KAp	
15	Long Duration discharge class	3	
16	Minimum single impulse energy capability		
17	Maximum residual voltage at switching impulse current of 1KAp (30/60 micro sec. wave)	70 KVp	

Sr. No.	Description	Data By Purchaser	Data by Supplier
18	Max. residual voltage (1x20 micro sec. wave)		
i)	At 05 KAp		
ii)	At 10 KAp		
iii)	At 20 KAp		
19	Minimum creepage distance	31 mm/KV	
20	Pressure relief class	40KA	
21	Reference current (mA)		
22	Leakage current at COV (mA)		
	Resistive		
	Capacitive		
23	Dry and wet power frequency withstand voltage of arrester insulation (KVrms)		
24	Virtual steepness for front of wave for above (KV/micro sec.)		
25	Ratio of system voltage withstand level to protection level of surge arrester		
26	High current impulse withstand 4/10 micro second peak value (KV)		
27	Long duration current Impulse		
i)	Current peak.		
ii)	Virtual duration.		
28	Temporary Over Voltage Capacity (KVp)		
i)	At 0.1 Sec.		
ii)	At 1.0 Sec.		
iii)	At 10.0 Sec.		
iv)	At 100.0 Sec.		
29	Weight of complete unit (Kg)		
30	Height of complete unit from base to the line side (mm)		
31	Minimum recommended spacing between arresters Centro to Centro (mm)		
32	Clearance required from ground equipment at various heights of arresters unit (mm)		

Sr. No.	Description	Data By Purchaser	Data by Supplier
33	Earthing arrangement provided for earthing side of arresters.		
34	Mounting flanges dimensional details.		
35	Type and range of milli-ampere meter.		
36	Type and specifications of the surge connecters.		
37	Surge counter min. current for recording a lightning stroke	200 Amp	
38	Surge counter max. disch. Current withstand	100KA peak for 4/10 wave shape.	
39	Range of continuous leakage current at rated voltage with variation due to change in temperature & frequency		
40	Size and length of flexible Cu cable for connection between LA & surge counter		
41	Voltage time curve for thermal stability of LA after a stroke	To be provided	
42	Paint shade of surge counter housing	Polyurethane, 692 of IS-5	

Annexure – D

Recommended spares (Data by supplier)

List of recommended spares shall be submitted as follows –

Sr. No.	Description of spare part	Unit	Quantity
1		Nos.	
2		Nos.	
3			
4			
5			
6			

BSES

Technical Specification of Various Types of Structural Steel Items

Specification no – BSES-TS-17-SSI-R0

Rev:		0
Date:		05 Apr 2022
Pages:		07
Prepared by	Jeena Borana	
	Vani Sood/ Pronab Bairagi	05/04/22 05/04/2022
Reviewed by	Srinivas Gopu	
	Amit Tomar	05/04/2022
Approved by	Gaurav Sharma	
	K. Sheshadri	05/04/22

INDEX

1.0 SCOPE OF SUPPLY 3
2.0 SERVICE CONDITION 3
3.0 CODES & STANDARDS 3
4.0 ELECTRICAL DATA 4
5.0 DESIGN PARAMETERS 4
6.0 MATERIAL 5
7.0 TESTING & INSPECTION 5
8.0 MARKING 6
9.0 DEVIATION 6
10.0 GUARANTEE CERTIFICATE 6
11.0 DOCUMENTS SUBMISSION 6

1.0 SCOPE OF SUPPLY

The specification covers design, manufacturing, testing of structural steel items at manufacturers works before dispatch. Packing, delivery of material and submission of documents/test reports to purchaser.

2.0 SERVICE CONDITION

Structural Steel items to be supplied against this specification shall be suitable for satisfactory continuous operation under outdoor environment. Following are the climatic condition:

S. No.	Parameters	Requirements
2.1	Peak ambient temp.	55°C
2.2	Min ambient temp. in shade	45°C
2.3	Max.average ambient temp in 24 hours period in shade	40°C
2.4	Min ambient temp.	(-)5°C
2.5	Max. temp. attainable by an object exposed to sun	70°C
2.6	Max. relative humidity	95%
2.7	Average number of thunder storm days per annum	40
2.8	Average number of rainy storm days per annum	120
2.9	Average annual rainfall	1250mm
2.10	No of months of tropical monsoon condition	4 months
2.11	Max. wind pressure	150kg/m2
2.12	Altitudes	Not exceeding 1000mtrs

3.0 CODES & STANDARDS

S. No.	Code	Description
3.1	2629.1985	Important guidelines for general for general hot-dip galvanizing of iron and steel
3.2	IS 2062	Hot Rolled Medium and High Tensile Structural Steel
3.3	IS 808	Dimension for Hot Rolled Steel Beam, Column, Channel and Angle Section
3.4	IS : 5561-1970	Specification for electric power connection

4.0 ELECTRICAL DATA

S.No.	Parameters	Details
4.1	LT Supply System	3 phase AC, 4 Wire
4.2	Rated Voltage	415+/-10%
4.3	Rated Frequency	50Hz ± 5%
4.4	Fault level	35MVA – 50kA

5.0 DESIGN PARAMETERS

S. No.	Description
5.1	MS Angle, Strctl,50mm , 50mm , 6mm
5.2	MS Angle, Strctl, 65mm , 65mm , 6mm
5.3	MS Angle, Strctl, 75mm , 75mm , 6mm
5.4	CHNL, Strctl, ISMC;150MM;75MM;16.8KG/M
5.5	CHNL, Strctl, ISMC100; 100MM; 50mm; 7.7mm
5.6	Flat, Strctl, 8mm;50mm;6000mm
5.7	Flat, Strctl, 6mm; 50mm;6000mm
5.8	Flat, Strctl, 6mm;50mm;5500mm

5.1 MS Angle (50MM:50MM:6MM): Dimension shall be A =50mm, B=50mm, C=6mm
5.2 MS Angle (65MM:65MM:6MM): Dimension shall be A =65mm, B=65mm, C=6mm
5.3 MS Angle (75MM:75MM:6MM): Dimension shall be A =75mm, B=75mm, C=6mm

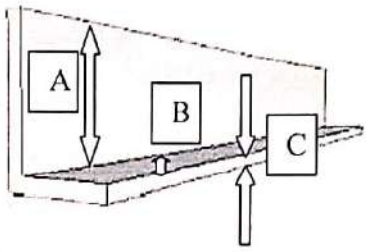

For MS Angle reference drawing (a, b & c)

5.4 Channel Structural (150MM;75MM;16.8KG/M): Dimension shall be 150MM;75MM;16.8KG/M
5.5 MS Channel (100MM;100MM;5MMX7.7MM): Dimension shall be D=100, B=100,t=5,T=7.7mm

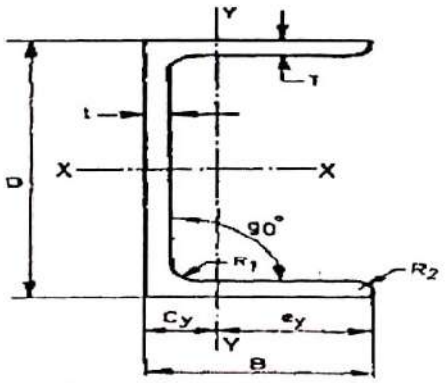

For MS Channel reference drawing (g & h)

5.6 Flat Structural (8MM;50MM;6000MM) : Dimension shall be 8MM;50MM;6000MM
5.7 Flat Structural (6MM;50MM;6000MM) : Dimension shall be 6MM;50MM;6000MM
5.8 Flat Structural (6MM;50MM;5500MM) : Dimension shall be 6MM;50MM;5500MM

6.0 MATERIAL

6.1	Material	Material shall be mild steel, grade 'A', Designation E-250 as per IS 2062.
6.2	Make	Steel shall be of TATA/SAIL/ESSAR/RINL/JSPL/JSW/VISA steel/Bhushan Steel/Other BSES approved make

7.0 TESTING & INSPECTION

All the tests shall be carried out in accordance with IEC / IS standards.

7.1	Visual Check	Material shall be visually checked and shall free from external defects.
7.2	Dimensional Check	The dimensional requirements shall be checked as per the drawing.

7.3	Acceptance Test	Following tests needs to be conducted by the vendor during inspection (value shall be followed as per relevant IS/IEC) a) Tensile Strength b) Yield Stress c) Elongation d) Chemical Composition as per IS 2062 from NABL accredited LAB. e) Incase of unavailability of inhouse testing facility, tests shall be conducted from NABL accredited LAB.

8.0 MARKING

8.1	The material shall be embossed with the details mentioned	a) Name/Model of the material b) Identification of the source of manufacture c) ISI mark

9.0 DEVIATION

Deviations from this Specification shall be stated in writing with the tender by reference to the Specification clause/GTP/Drawing and a description of the alternative offer. In absence of such a statement, requirements of the Specification shall be met without exception.

10.0 GUARANTEE CERTIFICATE

Guarantee Certificate to be given for any manufacturing defects along with its consignment from the date of receipts at stores for free replacement within one year.

11.0 DOCUMENTS SUBMISSION

Document submission shall be as per the matrix given below. All documents/drawing shall be provided in soft copy for each section. Language of the documents shall be English only. Deficient/improper drawing submission may liable for rejection.

S.No.	Detail of Document	For Tender	For Approval/Review	Final Submission
11.1	Deviation Sheet, if any	Required	Required	Required
11.2	GA and Dimensional	Required	Required	Required

S.No.	Detail of Document	For Tender	For Approval/Review	Final Submission
	Drawing			
11.3	Manufacturer's quality assurance plan and certification for quality standards		Required	Required
11.4	Make of Raw Materials	Required	Required	Required
11.5	Inspection and test reports, carried out in manufacturer's works			Required
11.6	Routine Test Certificates			Required
11.7	Test certificates of all the raw materials			Required

BSES

TECHNICAL SPECIFICATION

OF

GI STRIP

Specification No- GN101-03-SP-150-00

BSES RAJDHANI POWER LTD			
Prepared by	Abhay Gupta		Rev : 00
	Pronab Bairagi		
Reviewed by	Amit Tomar		Date : 5-Nov-18
Approved by	K. Sheshadri		Page : 1 of 13
Registered Office: BSES Bhawan, Nehru Place, Delhi - 110019			

BSES Rajdhani Power Ltd	GN101-03-SP-150-00

TECHNICAL SPECIFICATION OF GI STRIP

TABLE OF CONTENTS

REVISION RECORD 3

1.0 SCOPE 4

2.0 STANDARDS 4

3.0 CLIMATIC CONDITIONS 5

4.0 GENERAL TECHNICAL REQUIREMENT 5

4.1 GENERAL REQUIREMENTS 5

4.2 PHYSICAL AND CHEMICAL PROPERTIES 6

4.3 METHODS OF GALVANIZING 7

4.4 MARKING 8

4.5 DIMENSIONS TOLERANCE 8

5.0 TESTING 8

6.0 INSPECTION 10

7.0 STORING, PACKING AND HANDLING 10

8.0 DOCUMENTATION 11

8.1DRAWING, DATA AND MANUALS 11

8.2 DOCUMENTS TO BE SUBMITTED ALONG WITHBID FOR TECHNICAL JUSTIFICATION 11

8.3 WARRANTY 12

9.0 DEVIATIONS 13

TECHNICAL SPECIFICATION OF GI STRIP

REVISION RECORD

Rev. No.	Revision Date	Item/ clause no:	Page No.	Nature of Change	Approved by

TECHNICAL SPECIFICATION OF GI STRIP

1.0 SCOPE

This specification covers design, manufacture, testing, inspection and supply of GI strip for earthing (50X6mm and 25X6mm) (Heavy duty) for satisfactory operations in Sub-station / Project site at different locations under BSES Rajdhani Power Ltd, New Delhi.

2.0 STANDARDS

Material shall confirm to the latest applicable Indian standards (IS) which shall mean latest revisions, with amendments/changes adopted and published, unless specifically stated otherwise in the Specification.

S. No.	International/ Indian Standard	Title
1	IS:2629 (1966)	Recommended practice for hot dip galvanized iron Earthing strips
2	IS:2633 (1986)	Methods of testing uniformity of coating on Zinc coated articles
3	IS:5358 (1969)	Specification for hot dip galvanized coating on fasteners
4	IS:3203	Specification for electroplating
5	IS:4759 (1968)	Specification for hot dip Zinc coating on structural & other allied products
6	IS:2062 Grade 'A' quality	Specification for MS channel and MS flat
7	IS:2062	Chemical and physical composition material
8	IS:1852	Rolling and cutting tolerances for Hot rolled steel products
9	IS:6745	Specification for methods for the determination of the mass of Zn coated Iron and steel articles

TECHNICAL SPECIFICATION OF GI STRIP

3.0 CLIMATIC CONDITIONS

a)	Average grade atmospheric condition	Heavily polluted, dry
b)	Maximum altitude above sea level	1000 M
c)	Air temperature Ambient	i) Highest : 50°C ii) Average : 30°C iii) Minimum : 0°C
e)	Relative Humidity	100 % max
f)	Thermal Resistivity of Soil	150°C. cm / W (max.)
g)	Seismic Zone	4
h)	Rainfall	750 mm concentrated in four months

4.0 GENERAL TECHNICAL REQUIREMENT

4.1 GENERAL REQUIREMENTS

- The specification is for the sizes 50X6 mm and 25X6 mm GI Strip
- Fully galvanized iron strips shall be used in switchyard. Galvanized Iron strips shall confirm to IS: 2629 (1966). The Zinc deposition should not be more than 610 g / m^2 of the galvanized surface area of the MS strip.
- All galvanized materials shall withstand test as per IS: 2633 (1972). The weight of zinc coating shall be determined as per the method stipulated in IS: 2633(1964).
- The standard length of Galvanized Iron Earthing Strip shall be minimum 7 Meters and not exceeding 10 Meters.

- Uniform Zinc coating is required.

4.2 PHYSICAL AND CHEMICAL PROPERTIES

Physical-

The GI flat shall be supplied in 7m to 10m lengths.

The weight of GI flat shall be witnessed by BRPL at the time of taking delivery. The weight recorded in the material receipt certificate issued by BRPL shall be final.

Mechanical Properties (minimum requirement)		
1	Tensile strength (kgf/mm2)	410 kgf/mm^2
2	Yield stress (min.) for thickness <20mm	26 kgf/mm^2 or 250 N/mm^2
3	Elongation (%)	23%
4	Bend test	Minimum 3 times the thickness of material
5	Zinc coat thickness	70 microns

Chemical-

Chemical Properties		
S.No	**Element**	**%**
1	Iron	98.32
2	Carbon	0.204
3	Silicon	0.158
4	Manganese	0.510
5	Sulphur	0.028

TECHNICAL SPECIFICATION OF GI STRIP

Chemical Properties		
S.No	**Element**	**%**
6	Phosphorous	0.0320
7	Nickel	0.040
8	Chromium	0.086
9	Molybdenum	<0.01
10	Aluminium	<0.01
11	Copper	<0.104
12	Titanium	<0.005
13	Niobium	<0.01
14	Cobalt	<0.01
15	Boron	<0.0005
16	Lead	<0.01
17	Vanadium	<0.01
18	Zirconium	<0.006

4.3 METHODS OF GALVANIZING

S.No	Tests	For GI Flat
1	Dip test	4 dips of 1 min each
2	Mass of Zinc coating	610 g/m^2 (minimum)

- Pre dispatch inspection shall be performed to witness following tests:
  - Freedom from defects
  - Verification of dimensions
  - Galvanization tests
  - Mechanical tests
  - Chemical composition tests
- These tests are to be performed and certified at NABL accredited third party laboratory.
- MS Flat shall conform to IS 2062 and its latest amendments for steel and galvanization as per IS 4759 and its latest amendments.
- The flat shall be coated with Zn 98- Zinc grade
- The minimum Zn coating shall be 610 g/m^2 for thickness more than 5mm

4.4 MARKING

The bidder shall put his identification marks on the finished materials along with ISI mark, Manufacturer's name, PO No. and BRPL name. This mark shall be in "legible English letters".

4.5 DIMENSIONS TOLERANCE

Width = ±2.5%

Thickness = ±0.5%

5.0 TESTING

Type Test

Product shall be type tested from NABL accredited lab and same shall be submitted to BRPL. Type test report should not be older than 5 years old. Vendor shall conduct the type test (as per the relevant IS (Refer Clause 2.0 of this technical specification)) from BRPL sample from NABL accredited lab if type test report is older than 5 years without any cost implications to BRPL. Following type tests shall be conducted mandatorily-

i. Uniformity in thickness
ii. Mass of Zn coating
iii. Adhesion test
iv. Knife test for Zn coated hardware and assembled Steel products
v. Bend and wrapping test

vi. Tensile test

vii. Chemical composition test

viii. Freedom from defects

BRPL reserve the right to seal the sample once per PO for type testing from NABL accredited lab if required. Bidder has to conduct the type test on BRPL requirement. Expenses for type testing shall be borne by bidder.

Acceptance test

i. **Freedom from defects**

The Zinc coating shall be adherent, smooth, reasonably bright, continuous and free from imperfections as flux, ash and dross inclusions, bare and black spots, lumpiness and runs, rust stuns, bulky white deposits and blisters.

ii. **Uniformity in thickness**

Galvanized articles shall be tested for uniformity in thickness of coating in accordance with Preece test given in IS 2633- 1986.

iii. **Mass of Zn Coating**

Mass of Zinc coating shall be determined in accordance with IS 6745- 1972.

iv. **Adhesion test**

The adherence of the Zinc coat on steel shall be determined by the pivoted hammer test. The hammer shall be made of normalized 0.3 – 0.4 percent carbon steel (Shall be in accordance with IS: 2629 – 1985).

v. **Knife test for Zn coated hardware and assembled Steel products**

When the coating is cut or pried into, such as with a stout knife applied with considerable pressure in a manner tending to remove a portion of the coating, it shall only be possible to remove small particles of the coating and it shall not be possible to peel any portion of the coating so as to expose the underlying iron or steel (Shall be in accordance with IS: 2629 – 1985).

vi. Bend and wrapping test

vii. Tensile test

viii. Chemical composition test

6.0 INSPECTION

- The representative of Purchaser shall pick up samples at random from the GI strips offered for carrying out routine tests as per specified IS.
- The materials to be supplied will be subject to inspection and approval by BRPL's representative before dispatch and / or on arrival at the destination.
- Inspection before dispatch shall not relieve the bidder of their responsibility to supply the steel section strictly in accordance with the specification.
- The bidders shall abide by all the statutory provisions, acts such as the Indian Electricity Act, Indian factory Act, Indian Boiler Act etc. and corresponding rules and regulations as may be applicable and as amended from time to time.
- BRPLs representative shall be entitled at all reasonable time during manufacturing to inspect, examine and test at the bidders premises the materials and workmanship of the steel section to be supplied.
- As soon as the steel section is ready for testing, the bidder shall intimate BRPL well in advance.
- The material shall not be dispatched unless waiver of inspection is obtained or inspected by BRPL's authorized representative.
- The test certificate shall be in accordance with the latest version of the relevant Indian Standard or any equivalent International standards.
- The acceptance of any batch /lot shall in no way relieve the bidder of any of his responsibilities for meeting all the requirements of the specification and shall not prevent subsequent rejection of any item if the same later found defective.
- The purchaser reserves the right to reject on inspection after the same is received at destination.

7.0 STORING, PACKING AND HANDLING

Sufficient care shall be exercised while storing, packing and handling of galvanized products. While storing and transporting them, adequate ventilation shall be provided as otherwise 'rust' or 'wet storage stain' may result when galvanized coatings reacts with humidity and atmospheric gases. Galvanized articles can also be stored with spacers in between them, they shall also be kept at an inclination to facilitate drainage of water if collected on the articles. Post treatment like chromating shall be provided to minimize the chances of formation of white rust.

8.0 DOCUMENTATION

Submission of drawings, calculations, catalogues, manuals, test reports shall be as mentioned below:

8.1DRAWING, DATA AND MANUALS

Cross-Sectional drawing shall show every feature of construction. This drawing shall also state the text to be printed over the GI Strip, font sizes to be used, additional text if any etc.

8.2 DOCUMENTS TO BE SUBMITTED ALONG WITHBID FOR TECHNICAL JUSTIFICATION

The vendor shall submit-

- Cross sectional drawing
- GTP (all data to appear)
- Type test certificates

Document Submission

Submission of drawings, calculations, catalogues, manuals, test reports shall be as follows.

Legend:

GTP : Guaranteed Technical Particulars

TTR : Type Test Report

RTR : Routine Test Report

	Documents Along with offer	After award of contract- for Approval	Final documents(after Approval)
GTP	1 copies	** 1 soft copy	** 1 soft copy + CD
Drawings	1 copies	** 1 soft copy	** 1 soft copy + CD
Calculations	1copies	** 1 soft copy	** 1 soft copy + CD
Catalogues & Manual	1 copy each		** 1 soft copy + CD
Test Report	1 copy each of TTR and sample RTR		** 1 soft copy + CD

** Soft copy and CD shall contain documents duly approved, signed and scanned

- The manufacturing of the GI Strip shall be strictly in accordance with the approved drawings and no deviation shall be permitted without the written approval of the BRPL. All manufacturing and fabrication work in connection with the GI Strip prior to the approval of the drawing shall be at manufacturer's risk.
- Approval of drawing etc. by the BRPL shall not relieve the Manufacturer of his responsibility and liability for ensuring correctness and correct interpretation of the latest revision of applicable standards, rules and codes of practices. The GI Strip shall conform in all respects to high standards of engineering, design, workmanship and latest revisions of relevant standards at the time of ordering and BRPL shall have the power to reject any work or material which in his judgment is not in full accordance therewith.

8.3 WARRANTY

Warranty shall be 5 years minimum. All the relevant documents shall be submitted by the bidder in support to warranty terms and conditions.

9.0 DEVIATIONS

a) Deviations from this specification shall be listed separately by bidder clause wise (format given below) along with optional offer and has to submit the list along with bid/quotation. BRPL will review the deviations and if BRPL is agreed with the deviation, seller has to take written confirmation from BRPL on deviation during tender evaluation.

a) In the absence of any separate list of deviations from the bidders with bid as well as written confirmation from BRPL on deviations, it will be assumed by the Buyer that the Seller complies with the Specification fully.

b) Any deviations mentioned in any other submitted bid documents (i.e.in filled GTP, Catalog, BRPL old approval, buyer's/seller's standards etc) by seller without separate deviation sheets will not consider as a deviation from this tech spec at any stage of contract.

Deviation Sheet Format-

S.No	Document Name	Clause No.	Deviation	Reason	Merits to BRPL

BSES

48F Composite Fiber Multitube (MDPE) Single Sheath Duct Lite Optical Fiber Cable

PRODUCT INFORMATION

Fiber		
Single Mode Optical Fiber	**36 Nos.**	
Maximum Cabled Fiber Attenuation dB/Km		1310nm : 0.36 & 1550nm : 0.23 & 1625nm : 0.26
Multi Mode Optical Fiber	**12 Nos.**	**Fiber OM2 : 50/125**
Maximum Cabled Fiber Attenuation dB/Km		8500nm : 3.5 & 1300nm : 1.5
Loose Tube		
Filling Gel		Thixotropic gel to prevent water ingress in loose tube (ITCO T 250)
Fiber Per Tube	12 Nos.	
Tube	4 Nos.	Thermoplastic Material (PBT)
Core		
Central Strength Member		Fibre Reinforced Plastic (FRP) to provide tensile strength and antibuckling properties.
Filler	2 Nos.	Polyethylene Black
Water blocking elements		Cable flooding gel is added in interstices of core to prevent water ingress in the cable core (ITCO C 480)
Core Covering		Binder and Polyester Tape
Cable		
Rip Cord	2 Nos.	Polyester Based Twisted Yarn — Applied below Outer Sheath
Outer Sheathing		UV Proof Black MDPE (ME 6052/ME 6056) — 2.2 mm Nominal Thickness

CONSTRUCTIONAL DETAILS

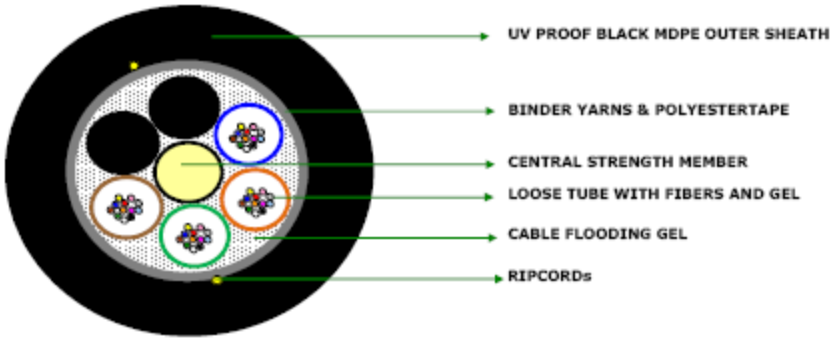

Typical construction Diagram - Not to Scale

OPTICAL FIBER CABLE PERFORMANCE

MECHANICAL				ENVIRONMENTAL	
Max. Tensile strength	2500 N	**Crush Resistance**	2000 N / 100x100 mm	**Temp. Performance**	
Minimum Bend Radius	20 D	**Impact strength**	25 Nm.	**Installation**	-20°C to +80°C
Repeated Bending Test	20 D,30Cycle	**Torsion**	±180°	**Service**	-20°C to +80°C
				Storage	-20°C to +80°C
Water Penetration	1m head, 3m samples, 24 Hr			**Drip Test**	30 cm, 70°C, 24 hr

Tests shall be carried out as per IEC 60793 & IEC 60794-1-2/GR 20 Standards. Change in attenuations shall be ≤ 0.05 dB.

COLOR DETAILS

Optical Fibre Colour	Blue, Orange, Green, Brown, Slate, White, Red, Black, Yellow, Violet, Pink, Aqua.
Loose Tube Colour	For G657A1 : Blue, Orange, Green & For OM2 : Brown.
Outer Sheath Colour	Black

PHYSICAL PARAMETERS

Cable Diameter (mm)	11.75 ± 0.25	**Cable Wt. (Kg/Km)**	114 ± 10%	**Cable Length:**	2 Km ± 5%

PRINTING DETAILS

Cable Printing details (White - Hot Foil Emb.)	MONTH & YEAR OF MANUFACTURE LENGTH CODE METER MARKING

The accuracy of marking shall be ± 0.5%. Occasional loss of printing & remarking shall be as per Bell core CR 20 and this supercedes the earlier markings.

SECTION – VIII: (CBuD) CALL BEFORE YOU DIG

BSES

****

(C079318
19102126

CD No. 021811396/E-Comp. No. 265580

GOVT. OF NCT OF DELHI
RIGHT OF WAY (ROW) BRANCH,
DEPARTMENT OF URBAN DEVELOPMENT
10TH LEVEL 'C' WING, DELHI SECRETARIAT
NEW DELHI-110002

No.F. 13(625)/UD/LB-/RoW/2025/74-86 **Dated:** 16/02/26

To,

1. The Commissioner, Municipal Corporation of Delhi, Dr. S.P.M. Civic Center, J.L.N. Marg, New Delhi -110002.
2. The Additional Chief Secretary, PWD, Vikas Marg, ITO, Delhi – 110002.
3. The Additional Chief Secretary, I&FC Department, LM Band Office Complex, Shastri Nagar, Delhi - 110092.
4. The Pr. Secretary, Power Department, 8th Floor, B-Wing, Delhi Secrt, Delhi 2.
5. The Chairman, NDMC, Palika Kendra, New Delhi- 110001.
6. The Chairman, DSIIDC, N36, Bombay life Building, Cannaught Circus, Delhi1
7. The Vice Chairman, Delhi Development Authority (DDA), A-Block, Ist Floor, Vikas Sadan, Near INA Market, New Delhi – 23.
8. The CEO, DJB, Varunalaya Ph-II, Jandehwalan, Karol Bagh, Delhi – 05.
9. The Chairman, Delhi Metro Rail Corporation Fire Brigade Lane, Barakhamba Road, New Delhi 110001
10. The CEO, Delhi Cantonment Board, Sadar Bazar, Delhi Cantt-110010.
11. Director, Tata Power Delhi Distribution Limited (TPDDL), NDPL House, Hudson Lines, Kingsway Camp, Delhi – 110009.
12. Director, BSES Rajdhani, BSES Bhawan, Nehru Place, New Delhi – 110019.
13. Director, BSES East Delhi, Shakti Kiran Building, Karkardooma, Delhi – 92.

Sub: Enhancement of usage of CBuD application in Delhi – 8th and 9th State Broadband Committee (SBC) Meeting - reg.

Sir,

Please find enclosed herewith the letter No. 163-24/DL LSA/2022-23/1 dated 08.12.2025 on the subject cited above received from Deputy Director General (Rural), Ministry of Communications, Department of Telecommunications vide which it has been referred minutes of meeting of 8th SBC meeting held on 12.12.2024 (Annexure-I) under the chairmanship of the Chief Secretary, GNCTD, during which decisions were taken on the subject of the Usage of Call Before You Dig (CBuD) application for protection of underground assets and avoiding public inconvenience and further a meeting-cum-workshop was held on 19.12.2025 (Annexure-II) under the Chairmanship of Special Secretary, UD.

Further, minutes of 9th SBC held on 08.01.2026 (Annexure-III) under the chairmanship of Chief Secretary, Delhi is also enclosed for compliance.

Sh. Anquish Gupta
Sh. Ajay Gafai
Sh. Fazl Patlai
Ful Circular Sh. DS

Further, it is, also therefore, requested to direct officer concerned to your department to comply with the following direction givens by the Chief Secretary, GNCT of Delhi in the 8th & 9th SBC meeting held on12.12.2024 and 08.01.2026:-

1. To update the names and contact details of their Nodal officers in the CBuD application and share their details (Names, Designation, Organisation, Mobile Number, Email ID) with the Director (Rural), Delhi LSA at dirr.dl-dgt-dot@gov.in.

2. To mandatorily use the CBuD App before initiating any excavation activity.

3. Incorporate the use of the CBuD App as mandatory condition in all REP., Work Orders, Tenders, and Agreements, and

4. All the excavation authorities will conduct CBuD workshop on priority with the help of Delhi LSA and give Schedule for CBuD workshop to Delhi LSA with in 15 days and report the progress to UD Department.

Encl: As above

(A. K. Singh)
Special Secretary

Government of India
Ministry of Communications
Department of Telecommunications
O/o Special DGT, Delhi LSA
5th Floor, Mahanagar Doorsanchar Bhawan, JLN Marg (Old Minto Road)
New Delhi-110002

No: 163-24/DL LSA/2022-23/1 Dated: 08/12/2025

To
Secretary (Urban Development)
Government of NCT of Delhi
Delhi Secretariat, I.P. Estate
New Delhi – 110002

Subject: Enhancement of usage of CBUD Application in Delhi – 8th State Broadband Committee (SBC) Meeting

Sir,

This is, with reference to the 8th State Broadband Committee (SBC) Meeting held on 12.12.2024 under the Chairmanship of the Chief Secretary, GNCTD, during which decisions were taken on the subject of the Usage of Call before You Dig (CBuD) application for protection of underground assets and avoiding public inconvenience.(Minutes of Meeting (Para viii) at **Annexure - 3).**

The CBuD application, as a digital platform, facilitate coordination between excavating agencies and underground utility owners such as telecom operators, gas and water pipeline agencies, and others. Its primary objective is to prevent accidental damage to critical underground infrastructure during excavation works undertaken by agencies such as Telecom Service Providers (TSPs), Local Bodies, PWD and so on. The application's overall utilization in Delhi is provided in **Annexure-1**.

The following points are requested for your kind attention please:

1. It is proposed that the Urban Development Department may appoint a suitable nodal officer to coordinate CBuD-related activities with the state entities who are involved in excavation work (like MCD, NDMC, PWD, DDA, Discoms, Delhi Metro, DJB, etc.)
2. With reference to D.O. Letter dated 11.06.2025 from Secretary (T), DoT and MoM of 8th SBC meeting, **(Annexure – 2 & 3),** this is to request to issue suitable directions to all relevant departments / agencies in Delhi to incorporate the use of the CBuD App as a condition in all RFPs, Work Orders, Tenders, and Agreements. The prescribed format to share periodic report with the DoT is at **Annexure- 4.**
3. State Asset owners may update the names and contact details of their

Contd....2.

Nodal officers in the CBuD application and share their details (Names, Designation, Organization, Mobile Number, Email ID) with the Director (Rural), Delhi LSA at dirr.dl-dgt-dot@gov.in.

4. Delhi LSA is ready to conduct training sessions for asset owners and excavators to facilitate effective use of the CBuD application. All concerned departments and agencies can schedule workshops and nominate participants accordingly.

Therefore, with respect to these points, this is to request, in reference to usage of CBuD application in Delhi, for kind necessary direction by your office please.

Enclosures:

- Annexure-1: CBuD Usage Statistics
- Annexure-2: D.O. Letter dated 11.06.2025 from Secretary Telecom, DoT
- Annexure-3: MoM of 8th SBC Meeting
- Annexure-4: Format of report to share status of implementation

(Vishal Vikram)
Deputy Director General (Rural)
Delhi LSA, DoT
Ph.: 011-23232433

Copy to:

1. Spl. DG Telecom, Delhi LSA, DoT
2. Pr. Secretary IT/PWD, GNCTD
3. DDG NBM, DoT

Annexure – 1

(File No: -163-24/DL LSA/2022-23/1 Date: 08/12/2025)

CBuD Enquires- Delhi

Sl. No.	Month, Year	CBuD Enquires Count (Total by all organisations / agencies, Delhi)
1.	June, 2025	32
2.	July, 2025	13
3.	Aug, 2025	29
4.	Sep, 2025	16
5.	Oct, 2025	13
6.	Nov, 2025	23

Annexure 2

डॉ. नीरज मित्तल, भा.प्र.से.
सचिव
DR. NEERAJ MITTAL, IAS
Secretary

सत्यमेव जयते

भारत सरकार
संचार मंत्रालय
दूरसंचार विभाग
Government of India
Ministry of Communications
Department of Telecommunications

D.O. No. 5-5/2024/NBM-CBuD
Dated: 11th June, 2025

Dear Chief Secretary/Administrator,

As you may be aware, the "Call Before u Dig" (CBuD) App was launched on 22nd March 2023 by the Department of Telecommunications (DoT) as a digital platform to facilitate coordination between excavating agencies and underground utility owners such as telecom operators, gas and water pipeline agencies, and others. The primary objective of the initiative is to prevent accidental damage to critical underground infrastructure during excavation and developmental works undertaken by agencies such as PWD, local bodies, and Telecom Service Providers (TSPs).

2. It is highlighted that in accordance with the provisions of the Telecommunications Act, 2023 and the Right of Way Rules, 2024, it is mandatory to inform the concerned underground utility owners prior to carrying out any excavation activity.

3. However, during a recent review, it was observed that the usage of the CBuD App by various states remains considerably low. A state-wise summary of CBuD usage and the proportion of total national usage for the past five months is enclosed as **Annexure-I.**

4. In this context, the Administrator (DBN), DoT, vide letter dated 19.11.2024, had written to the Chief Secretaries of all States/UTs suggesting measures to improve CBuD usage. Key among these were:

- Mandating the use of the CBuD App by departments/agencies such as PWD, Water, Gas, Electricity, Urban Local Bodies, etc.,
- Incorporating the requirement to use the CBuD App in all RFPs; Work Orders, Tenders, and Agreements issued by these agencies, and
- Linking a small percentage of contractor payments to the actual usage of the CBuD App during project implementation.

A copy of the letter is enclosed for reference as **Annexure-II.**

Contd...2

5. In view of the above, I request you to kindly issue suitable directions to all relevant departments and agencies in your State to:

a) Mandate the use of the CBuD App before initiating any excavation activity,
b) Incorporate the use of the CBuD App as a condition in all RFPs, Work Orders, Tenders, and Agreements, and
c) Share periodic reports with the DoT in the prescribed format enclosed as **Annexure-III.**

For any further coordination, Shri Nijamuddin, Director-III, NBM (Mobile: 7011786786; Email: dir3@broadbandmission.gov.in) may be contacted as the Single Point of Contact from DoT.

6. We look forward to your support in ensuring the protection of vital underground infrastructure and improving inter-agency coordination through the effective use of the CBuD App.

Yours Sincerely,

Encl: as above.

(Dr. Neeraj Mittal)

The Chief Secretaries/Administrators of all States and UTs.

Annexure 3

Government of India
Ministry of Communications
Department of Telecommunications
O/o Advisor, Delhi LSA
Mahanagar Doorsanchar Bhawan, Jawaharlal Nehru Marg, New Delhi - 110002

No. 163-01/DLSA/2020-21 Dated 17.01.2025

Minutes of meeting of 8th SBC

8th SBC meeting of Delhi state was held on 12.12.2024 at 11:00 Hrs under the chairmanship of Chief Secretary, GNCTD at 5th Floor Conference Room, Delhi Secretariat. The meeting was attended by officers of Delhi Govt., MCD, NDMC, DDA, Telecom service providers / IPs / ISPs and their associations. List of participants is enclosed as Annexure.

2. At the outset Spl. DGT Delhi LSA welcomed Chief Secretary for giving time for the meeting and for resolution of many issues specially grant of permission for installation of In Building Solution in Pragati Maidan tunnel resulting in mobile coverage there.

3. Each of the Agenda items were deliberated at length and it was decided as follows:-

S.N.	Issues deliberated	Decision taken
i.	Issues relating to Right of Way (RoW) permissions for laying of Optical fiber cables and erection of towers.	(i) TSPs / IPs, Delhi LSA of DOT and MCD will reconcile status w.r.t. permissions for erection of tower in MCD Area. (ii) MCD will formulate a mechanism and look into the pending applications for ROW permissions for OFC laying within a week. (iii) MCD will review all pending ROW applications every fortnight both for OFC as well as towers and ensure they are decided within 60 days time limit. (iv) CS directed NDMC / MCD / PWD / DDA to designate one officer as nodal incharge for disposal of pending Row Applications within the stipulated time frame and intimate to Delhi LSA DoT. (v) NDMC, PWD and others to also have similar procedure in place as per above. (vi) CS directed TSPs toreplace the existing Cell on Wheels (COWs), with towers in time bound

		manner. (vii) CS directed TSPs to enhance 5G coverage in Delhi with prime localities like New Delhi District on priority.
ii.	Charges for grant of Row Permissions	It was pointed out by Delhi LSA DOT and TSPs / IPs that charges being levied by MCD, NDMC, Discoms, etc. are not as per the notification of GNCTD dated 1.11.23. / NDMC. It was decided that: (i) Row Charges will be as per GNCTD / NDMC notifications till 31.12.24. Row Charges will be as per RoW Rules 2024 notified by DOT w.e.f. 1.1.25. (ii) Power Department and UD would write to Discoms and PWD respectively that Para (i) above would be applicable for them as well. (iii) MCD and TSPs / IPs will try to amicably sort out the matter relating to ongoing litigation case regarding RoW Charges. MCD to convene a meeting in this regard.
iii.	Portal for RoW permissions	It was decided that i. MCD, NDMC, PWD, Cantonment Board, and others will all use Central Row Portal. Each entity will assign a nodal officer for the same within two days and Delhi LSA of DOT will assist in migration from existing portals to Central portal at the earliest. ii. The following provisions may be included in the central ROW portal: a. Local bodies to have facility to upload / mention any concern with regard to the application so that the applicant entity may fulfil the requirement / respond. A remark column to be added in the format for application. b. Any application would be registered / considered only when the application fees has been paid for the same by the applicant.

iv.	Amendment of building bye laws of Delhi by DDA in accordance with MoHUA for inclusion of In Building Solution (IBS).	CS advised that there should be provision of spaces / duct etc. in the buildings for deployment of IBS for providing WIFI and mobile coverage inside buildings. DDA may deliberate details with all stakeholders on the matter at the earliest..
v.	GIS mapping of street furniture on Gati Shakti Portal as per DPIIT letter dated 24.6.22	CS directed IT Department of GNCTD to ensure implementation at the earliest. GSDL will share the data with BISAG in the format required by BISAG for GIS mapping.
vi.	Fire NOC requirement for Buildings for permission for erection of towers for Telecom service:	Details of equipment deployed at Tower locations will be shared by TSPs / IPs with UD department. Thereafter UD Department would convene meeting on the matter with Telecom Service Providers (TSPs) / Telecom Infrastructure Providers (IPs).
vii.	TSPs may be allowed to deploy its telecom equipmentinside the Stadiums in Delhi.	TSPs will provide a list of stadiums where Telecom Infra is required to be deployed permanently. Based on the same Delhi LSA DOT will write to UD Department with detailed requirements for consideration by UD Department.
viii.	Usage of Call before You Dig (CBuD) application for protection of underground assets and avoiding public inconvenience.	CS directed UD Department to advise all entities who are involved in excavation work (like MCD, NDMC, PWD, DDA, Discoms, Delhi Metro, DJB) for the following: *To include CBuD in each of their respective tenders of excavation,mandatorily, and to monitor the compliance of the same meticulously to protect underground assets and avoid public inconvenience.*
ix.	Convening of District Level Telecom Committee meetings under the chairmanship of respective District Commissioners of Districts in Delhi	CS directed Revenue Department to arrange for regular meetings of DLTC in each of the Districts on Telecom issues including usage of CBuD and proliferation of Telecom Services.
x.	Notification w.r.t. GEOA issued by DERC 12.11.2024. is applicable for consumers connected to lines of 11 KV or above, which is not the case for Telecom operators of Delhi as they have connections less than 11 KV.	Representation has been sent by COAI and DIPA to DERC / GNCTD vide letters dated 4.11.24 and 13.11.24. CS directed Power Department of GNCTD to take up the matter with DERC.

xi.	Feasibility of deployment of multi utility towers.	Delhi LSA DOT may provide consultation paper in this regard for consideration of UD Department, MCD, PWD, NDMC, etc.
xii.	Procurement of only MTCTE certified Telecom Equipment for IT projects.	Secretary (IT) informed that order has already been issued in this regard on 17.1.2024 by GNCTD. IT Department assured to reiterate the instructions for compliance.
xiii.	Effective utilization of 5G labsinstalled at 4 Engineering Colleges/ institutions in Delhi. and Inclusion of NCVET /AICTE approved courses on new technology by technical institutes & skill development missions	Delhi LSA, DOT to provide a draft advisory in this respect to the following: (i) Directorate of Higher Education for circulation to Engineering colleges. (ii) Department of Industries and Directorate of Training and Technical Educationfor circulation to start ups, & skill development missions, etc.

3. The meeting ended with thanks to the chair.

(Vishal Vikram)
DDG (Rural -II)
Delhi LSA, DoT

Enclosure As above.

To

1. All concerned Departments

2. All the participants

Copy for kind information:

1. DGT, DOT
2. OSD to Chief Secretary, Delhi

Annexure 4

Annexure III: Status of implementation Rule 19 of the RoW Rules 2024 under the Telecommunication Act 2023 reg. safety of Telecom assets																
Sr. No.	State / UT	Whether Mandate/Orders issued by States/UT for the implementation of Rule 19 of Telecommunication RoW rules 2024	Date of Letter	Whether similar guidelines issued by Department												
				Water/Sewerage			Electricity			GasPipeline			Any other			
				Yes / No	Date of Letter	Being included in RFP, all RFPs, Work Orders, Tenders, and Agreements	Yes / No	Date of Letter	Being included in RFP, all RFPs, Work Orders, Tenders, and Agreements	Yes / No	Date of Letter	Being included in RFP, all RFPs, Work Orders, Tenders, and Agreements	Yes / No	Date of Letter	Being included in RFP, all RFPs, Work Orders, Tenders, and Agreements
1	ANDAMAN AND NICOBAR ISLANDS															
2	ANDHRA PRADESH															
3	ARUNACHAL PRADESH															
4	ASSAM															
5	BIHAR															
6	CHANDIGARH															
7	CHHATTISGARH															
8	DELHI															
9	GOA															
10	GUJARAT															
11	HARYANA															
12	HIMACHAL PRADESH															
13	JAMMU AND KASHMIR															
14	JHARKHAND															
15	KARNATAKA															
16	KERALA															
17	LADAKH															
18	LAKSHADWEEP															
19	MADHYA PRADESH															
20	MAHARASHTRA															
21	MANIPUR															
22	MEGHALAYA															
23	MIZORAM															
24	NAGALAND															
25	ODISHA															
26	PUDUCHERRY															
27	PUNJAB															
28	RAJASTHAN															
29	SIKKIM															
30	TAMIL NADU															
31	TELANGANA															
32	THE DADRA AND NAGAR HAVELI AND DAMAN AND DIU															
33	TRIPURA															
34	UTTAR PRADESH															
35	UTTARAKHAND															
36	WEST BENGAL															

CD No. 021816483
E-Comp. No. 316117

GOVT. OF NCT OF DELHI
O/o THE SPECIAL SECRETARY
DEPARTMENT OF URBAN DEVELOPMENT
10TH LEVEL 'A' WING, DELHI SECRETARIAT
NEW DELHI-110002

No.F. 13(644)/UD/LB/RoW/2025/30-49 **Dated:** 23/12/2025

Subject: Minutes of Meeting with stakeholders regarding actions to be taken for enhancement of usage of CBUD in Delhi

A meeting-cum-workshop on the Call Before You Dig (CBuD) application, chaired by Special Secretary (Urban Development), GNCTD, was held on 19.12.2025 in the Conference Room, 2nd Floor, Delhi Secretariat, New Delhi. The meeting was convened to discuss actions required for enhancing the usage of the CBuD application.

The meeting was attended by officers from the Planning Department, PWD, Delhi Jal Board, MCD, Delhi Cantonment board, BSES Yamuna, BSES Rajdhani, Tata Powers and officers from Delhi LSA, DoT. The list of participants is enclosed as Annexure-I.

2. Special Secretary (UD) welcomed the participants and explained that CBuD app is vital across all sectors having underground assets be it gas pipeline, water pipelines, electricity cables, telecom cables etc. Usage of the said application will reduce expenditure on repairs, enhance efficiency and avoid public inconvenience by avoiding damage to such underground infrastructure. He further informed that the Chief Secretary, in the 8th SBC meeting, had directed all state departments involved in excavation works to include the CBuD clause in their tenders, RFPs, and work orders, and to ensure compliance by all vendors and excavators under their control.

3. DDG (Rural) thanked the Special Secretary (UD) for convening the meeting, noting that the number of CBuD enquiries in Delhi is significantly lower compared to other states. He requested all state agencies and departments to submit compliance reports regarding the inclusion of the CBuD clause in their tenders and work orders. He also informed that Delhi LSA is prepared to conduct training sessions and workshops for asset owners and excavators on the use of the CBuD application.

4. Director (Rural), Delhi LSA delivered a brief presentation covering, key features of the CBuD mobile application, regulatory provisions and compliance expectations & current usage statistics and areas of concern.

5. The low usage of CBuD was deliberated in depth and brief of discussions and decisions are follows:

(i) Delhi LSA has informed that utilisation of CBuD application is quite less in Delhi even though there is increase in inquiries (CBuD) Count in recent months. Many entities who are involved in excavation work are not using the App to make enquiry. The matter require serious attention and urgent time bound steps to enhance usage of CBuD. The Asset owners / Agencies / Entities who are involved in excavation works are required to regularly log in to CBuD website to ensure proper usage.

(ii) Nodal officers from different departments were nominated in 2023. Many officers have already changed due to transfer Therefore, it was proposed that the all concerned departments, may update nodal officer for CBuD-related activities in their department for monitoring and compliance of CBuD activities. It is requested to inform the details of Nodal Officer i.e. his/her Name, Designation, organization, Mobile number and Email ID to Director Rural, Delhi LSA (Mobile No. 9968077100, Mail id- dirr.dl-dgt-dot@gov.in)

(iii) In 8th State Broadband Committee Meeting held on 12.12.2024, Chaired by Chief secretary GNCTD, decision was taken on the Usage of Call before You Dig (CBuD) application for protection of underground assets and avoiding public inconvenience. Direction was given for all entities who are involved in excavation work (like MCD, NDMC, PWD, DDA, DISCOMs, Delhi Metro, DJB) on the subject of inclusion of CBuD Clause in their respective tenders of excavation, etc.

All the organizations/departments are requested, who are involved in excavation work, to include the said CBuD clause in their Tender / RFP / Work Order / Agreement and give compliance in given format (Annexure- II) and regular utilization report.

(iv) The Director (Rural) requested all authorities and entities to organize CBuD workshops for their respective staff and excavators. He requested to coordinate internally and inform to Urban Development Department about the proposed date and venue.

(v) Director (Rural) has raised the issue of unreported digging i.e. instances of excavation without CBuD inquiry. All asset owners must ensure that their contractors and agencies should **mandatorily use CBuD** before any digging activity.

The meeting concluded with a vote of thanks.

Encl. As above

23/12/2025

(Hemant Kumar, IAS)
Special Secretary

No.F. 13(644)/UD/LB/RoW/2025/30-49 **Dated:** 23/12/2025

Copy to:-

1. The Commissioner, Municipal Corporation of Delhi, Dr. S.P.M. Civic Center, J.L.N. Marg, New Delhi -110002.
2. The Additional Chief Secretary, PWD, Vikas Marg, ITO, Delhi – 110002.
3. The Additional Chief Secretary, I&FC Department, LM Band Office Complex, Shastri Nagar, Delhi.
4. The Pr. Secretary, Power Department, 8th Floor, B-Wing, Delhi Secretariat, Delhi
5. The Chairman, NDMC, Palika Kendra, New Delhi.
6. The Chairman, DSIIDC, N-36, Bombay life Building, Cannaught Circus, New Delhi – 110001.
7. The Vice Chairman, Delhi Development Authority (DDA), A-Block, Ist Floor, Vikas Sadan, Near INA Market, New Delhi – 23.
8. The CEO, DJB, Varunalaya Ph-II, Jandehwalan, Karol Bagh, Delhi – 05.
9. The Chairman, DMRC, Fire Brigade Lane, Barakhamba Road, New Delhi 110001
10. The CEO, Delhi Cantonment Board, Sadar Bazar, Delhi Cantt-110010.
11. Director, Tata Power Delhi Distribution Limited (TPDDL), NDPL House, Hudson Lines, Kingsway Camp, Delhi – 110009.

[illegible] PSPS Bhawan, Nehru Place, New Delhi – 110019.

13. Director, BSES East Delhi, Shakti Kiran Building, Karkardooma, Delhi – 110092.
14. Director/Nodal Officer (CMDF), Planning Department, GNCTD.
15. Director/Nodal Officer (DVDB), Development Department, GNCTD, 5 Sham Nath Marg, Delhi - 110054

Copy for information to:-.

1. The ACS, Department of Information Technology, 9th Level, B-Wing, Delhi Sectt
2. The Spl. DG Telecom, Delhi LSA, DOT
3. PPS to Secretary (UD), Delhi Sectt.
4. P.S to Spl. Secretary-III (UD)

23/12/2015

(Hemant Kumar, IAS)
Special Secretary

Government of India
Ministry of Communications
Department of Telecommunications
O/o Special DGT, Delhi LSA
Mahanagar Doorsanchar Bhawan, Jawaharlal Nehru Marg, New Delhi - 110002

No. 163-01/DLSA/2020-21 Dated 30 .01.2026

Minutes of Meeting of 9th SBC

9th SBC meeting of Delhi state was held on 08.01.2025 at 11:00 Hrs under the chairmanship of Chief Secretary, Delhi at 5th Floor Conference Room, Delhi Secretariat. The meeting was attended by officers of DoT Delhi LSA, Delhi Govt., MCD, NDMC, DDA, Telecom Service Providers / IPs / ISPs and their associations. List of participants is enclosed as **Annexure.**

2. At the outset Spl. DGT Delhi LSA welcomed Chief Secretary for giving time for the meeting and for resolution of many issues specially the timely adoption of Telecommunications RoW -2024 Rules in Delhi.

3. Each of the Agenda items were deliberated at length and it was decided as under: -

S.N.	Issues deliberated	Decision taken
01	Portal for RoW permissions.	(i) NDMC will complete RoW portal work by 31st Jan 2026, including deemed approval provisions as per the Telecommunications RoW Rules 2024. (ii) DDA, PWD, DSIIDC and other authorities of Delhi will also complete RoW portal work by 31st Jan 2026 including deemed approval provisions as per the Telecommunications RoW Rules 2024. (iii) GSDL is charging Rs.5000/- per application. IT department and GSDL will have an internal meeting to look into it. Charges should be decided as per the prevailing Telecommunications (Right of Way) Rules, 2024 and cannot be more than as provisioned in RoW Rules 2024.
02	Issues relating to RoW permission for laying of optical fibre cables, erection of towers, etc.	(i) As on 01.01.2026, total RoW pendency more than 67 days is about 229 of which 93 cases are of 2024 and 135 cases of 2025.

		(ii) The Chief Secretary directed to all concerned authorities to dispose off all the old pending RoW Applications within the stipulated time frame as provisioned in the Telecom RoW Rules 2024, intimate to Delhi LSA DoT and no pendency should be in next meeting. (iii) Timely disposal / approval of the RoW applications to be done by all the approving authorities (PWD, DDA, MCD, NDMC, etc.) so that no case should go to the extent of deemed approval (as provisioned in RoW Rules 2024). All the departments will work with due diligence. TSPs / IPs / ISPs were also advised to follow the DPCC guidelines on dust control measures.
03	Replace the existing Cell on Wheels (COWs), with towers in time bound manner.	As per information from TSPs / IPs / COAI, all the 161 CoWs applied for permanent tower permission, but NDMC informed that only 16 applications are pending. The Chief Secretary directed TSPs to reconcile the figures with NDMC and take action to replace the existing Cell on Wheels (COWs), with towers in time bound manner as per permission granted.
04	DISCOMs Pole charges	It was pointed out by Delhi LSA DOT and TSPs / IPs that charges being levied by DISCOM for pole charges, are not as per RoW Rules 2024 although Power department has issued order in this regard. The Chief Secretary directed Power Department of GNCTD to take up the matter with DISCOMs and ensure the implementation of RoW 2024 Rules in true spirit at ground level.
05	RoW litigation case	Decision was taken in 8th SBC Meeting that MCD to convene Meeting with regard to the ongoing litigation case regarding RoW Charges. MCD to submit Action Taken Report (ATR) on the ongoing litigation case regarding RoW charges by 31.01.2026.
06	To enhance 5G Coverage.	The Chief Secretary directed TSPs to enhance 5G coverage in Delhi. He stated that the Capital should be the model 5G coverage city and ideally there should not be any dark spots in this regard. He asked DoT to also monitor. TSPs / COAI will submit the details of coverage and 5G coverage in Delhi.
07	Usage of Call before You Dig (CBuD) application for protection of	The Chief Secretary directed UD Department that all agencies / entities who are involved

30/01/2026

	underground assets and avoiding public inconvenience.	in excavation work (like MCD, NDMC, PWD, DDA, DISCOMS, Delhi Metro, DJB): (i) To mandatorily use the CBuD App before initiating any excavation activity. (ii) Incorporate the use of the CBuD App as mandatory condition in all RFPs, Work Orders, Tenders, and Agreements, and (iii) All the excavation authorities will conduct CBuD workshop on priority with the help of Delhi LSA and give Schedule for CBuD workshop to Delhi LSA within 15 days and report the progress to UD.
08	Amendment of building bye laws of Delhi by DDA in accordance with MoHUA for inclusion of In Building Solution (IBS).	The Chief Secretary directed all authorities—MCD, NDMC, and DDA—to incorporate the Addendum to the Building Bye-Laws, 2022 into their respective Building Bye Laws. The Chief Secretary also instructed to submit, a report detailing the number of building plans approved under these provisions, in the next meeting.
09	Smart /Prepaid meter to be installed at the Telecom sites	The Chief Secretary directed Power department to take up the matter with DISCOMs to seek the timeline and report detailing the number of Smart /Prepaid meter installed.
10	Standardisation of street furniture - Faster rollout of 5G through use of street furniture	DoT letter dated 31.01.2025 from Administrator (DBN) addressed to the Chief Secretaries of all States and Advisors/Administrators of all UTs was issued for faster rollout of 5G through use of Street furniture. The Chief Secretary directed Power department to take up the matter with DISCOMs and initiate and plan accordingly.
11	Convening of District Level Telecom Committee meetings under the chairmanship of respective District Commissioners of Districts in Delhi:	The Chief Secretary directed Revenue Department to arrange for regular meetings of DLTC in each of the Districts on Telecom issues including usage of CBuD and proliferation of Telecom Services.
12	Green Energy Open Access (GEOA)	Notification w.r.t. GEOA issued by DERC 12.11.2024 is applicable for consumers connected to lines of 11 KV or above, which is not the case for Telecom operators of Delhi as they have connections less than 11 KV. Representation has been sent by COAI and DIPA to DERC / GNCTD vide letters dated 4.11.24 and 13.11.24 respectively. The Chief Secretary directed Power Department of GNCTD to take up the matter with DERC and revise suitably.

Amit Jha 30/01/2026

13	Industrial tariff for electricity for Telecom infra	By letter dated 19.1.2024, DERC informed that tariff is amended once in a year only and Change of category of telecom service to industrial tariff will be discussed by commission during next tariff revision along with representations of other stake holders. The Chief Secretary directed Delhi LSA, DoT to share the letter with Power department, to follow up with DERC.
14	Mobile Number Portability	The Chief Secretary directed Delhi LSA to submit the MNP provisioning data for Delhi.
15	Overhead OFC of TSPs cuts by DISCOMS.	The Chief Secretary directed Power Department, GNCTD to hold meetings with TSPs and DISCOMs on the subject of overhead OFC cuts by DISCOMS.

4. The meeting ended with thanks to the chair.

30/01/2026

(Amit Kumar Jha)
Director (Rural)
Delhi LSA, DoT

Enclosure As above.

To

1. All concerned Departments

2. All the participants

Copy for kind information:

1. DGT, DOT
2. OSD to Chief Secretary, Delhi

SOP/Guidelines on Implementation of new practices in Cable Laying Scheme Works

Subject: Implementation of Guidelines for HT Cable Laying, Mandatory Videography, Joint Tagging, and Condition Monitoring for 11 kV Cables

HT cables shall be laid strictly in accordance with standard installation practices as per IS 1255. A detailed Standard Operating Procedure (SOP), aligned with applicable standards and site conditions, has already been prepared, approved by top management, and circulated to the O&M executives.

Despite adherence to standards, instances of improper installation practices, poor FLC practices, substandard jointing and terminations, aging, sheath damage, and continuous overloading may lead to faults in the HT cable network. These factors contribute to deterioration of cable insulation, ultimately resulting in cable failures.

Additionally, there is currently limited implementation of condition monitoring tests for 11 kV cables before laying, during installation, and prior to energization. These tests are already included in the circulated SOP and incorporated within the scope of 11 kV Scheme works..

For accurate analysis of condition monitoring results, proper tagging of joints is essential for all newly laid cables, as well as at jointing locations in cases of running faults or external damage. Furthermore, complete mapping of all joints must be carried out on the GIS platform along with correct cable route.

To address the absence of a compliance tracking mechanism for cables laid under various 11 kVschemes, mandatory videography has also been included. This will ensure proper documentation of excavation, cable laying, jointing, and road restoration activities. Further, to ensure proper cable laying activities, a third-party pre-energizing cable testing process has been added. The Cable laying vendor after laying and preparation of all type of joints i.e (Straight through and Termination) of entire cable and before energizing, 4 Nos of condition monitoring test will be mandatory.

The details of the new process that has been added in the Cable laying process is as follows:

1. Condition Monitoring Tests for 11 kV Cables

All newly laid 11 kV cables shall undergo the following condition monitoring tests after laying and before energization:

- **VLF High Voltage Test** (0.1 Hz sinusoidal) in place of DC HV test
- **VLF Tan Delta Test** (0.1 Hz sinusoidal)
  - Measurement of Mean Tan Delta at Uo
  - Tip-Up (difference between 0.5Uo,1Uo, 1.5Uo and 2Uo)
  - Time stability (standard deviation at Uo)
- **VLF Partial Discharge Test** (0.1 Hz sinusoidal)
  - PD calibration and mapping
  - PDIV, PDEV, PD max levels at 0.5Uo,1Uo, 1.5Uo and 2Uo
  - Phase-resolved PD patterns (PRPD)
- **Sheath Integrity Test**: Sheath test should be conducted:
  - After laying and backfilling

- After jointing / before energization (final integrity check)

All tests shall be conducted as per IEEE 400.2 guidelines and documented properly.

2. Cable Laying Practices

The approved SOP for cable laying, jointly prepared by OET and CES (Attached Annexure A) and shared with C&M for inclusion in 11 kV scheme scope, shall be strictly followed. Any deviation shall be viewed seriously and attract accountability.

3. GIS Mapping of Cable Joints

- All joints installed under any scheme shall be mandatorily mapped on the GIS platform before closure of the scheme.
- Accurate GIS coordinates shall be recorded and tagged for each joint location.

4. Mandatory Videography of Cable Laying Works

Videography shall be carried out for the complete execution process including:

- Excavation and trenching
- Cable laying
- Jointing activities
- Road restoration

The videography/capturing images shall clearly capture the following parameters:

- Cable terminations: Preparation of all joints being made and tightening of cable with torque wrench (30 sec)
- Straight-through/transition joints: Preparation of all joints (30 sec)
- Use of tools and machinery while laying the cable (e.g., forklift trucks, Cable drum unwinding, cable rollers, pulling machines etc.) Videography shall contain usage of all types of tools and tackles (30 sec)
- Cable depth and bending radius (30 sec)
- Physical condition of cable sheath (30 sec)
- Trench excavation and securing (Images)
- Placement of protective slab (or tiles) / Docketing and documentation practices- Proper tagging is to be captured (30 sec)
- HV cables placement by individual pulling onto rollers (Images)
- Low thermal resistivity back filling and compacting/Images of heat transfer- for example sand arrangement (Images)
- Top layer reinstatement (Images)

Videos/images will be captured by the vendor and uploaded by the concerned execution engineer in the designated place and can be linked from the SAP. Images can be saved in SAP software directly.

Images captured must have date, time stamp & latitude and longitude co-ordinates

Videos captured must have date and time stamp. Latitude and longitude co-ordinates must be captured separately and super-imposed for unique identification.

Inclusion of Videography in Scheme Work Orders

- Videography shall form an integral and mandatory component of all HT scheme works for 11KV cable laying.
- Non-compliance shall render the work incomplete for billing purposes.
- No payment shall be released without submission of video graphic evidence.

5. Quality Clearance (QC) Requirement

- Submission of videography is mandatory for obtaining Quality Clearance (QC).
- The Execution Engineer shall ensure uploading of videography records on the designated server.
- In absence of required documentation, QC clearance shall be withheld and payment shall not be processed.

7. Testing methodology in newly 11 kV laid cables:

The following methodology, safety precautions, isolation requirements, and procedural checks shall be strictly complied with prior to and during the execution of condition monitoring testing activities for newly laid 11 kV cables. The compliance of these requirements shall be jointly verified by the Third-Party Testing Agency, BRPL Protection & Control (P&C) Engineer, Execution Engineer, and the authorized representative of the Cable Laying Vendor before commencement of testing work.

Detailed testing methodology document has been prepared separately and attached as Annexure B.

7.1 Pre-Testing Readiness and Completion of Installation Work

a) All condition monitoring tests shall be conducted only after complete execution of the cable laying work, including but not limited to:

- Cable laying and dressing;
- Straight-through jointing;
- Termination jointing;
- Bonding and earthing works;
- Completion of all related civil and restoration activities, wherever applicable.

b) The cable laying vendor shall ensure that the cable system is fully ready for testing and free from any temporary connections, unfinished works, or unsafe conditions prior to offering the cable for testing.

7.2 Isolation and System Safety Requirements

a) The cable termination point connected through a Breaker or Isolator in the Ring Main Unit (RMU) shall remain OPEN, isolated, and disconnected from the live electrical system during Permit to Work (PTW) issuance and throughout the complete testing duration.

b) All other switching points and connected feeders within the RMU associated with the cable section under test shall also remain OPEN during testing activities to ensure complete electrical isolation and personnel safety.

For illustration, in case of a 4-Way RMU configuration, all two (02) Breakers and two (02) Isolators shall remain in OPEN condition during the testing period.

c) Proper isolation confirmation shall be jointly verified by the concerned BRPL Engineer and testing agency prior to energization of testing equipment.

7.3 Lock-Out Tag-Out (LOTO) and Safety Barricading

a) A proper Lock-Out Tag-Out (LOTO) arrangement shall be mandatory installed on the RMU/termination point door before commencement of testing activities and shall remain effective until completion of the testing work.

b) Suitable barricading and safety precaution arrangements shall be made around the testing area to prevent unauthorized entry.

c) “Precaution-- High Voltage Testing Work under Progress” tapes/signage shall be prominently displayed at all accessible points surrounding the testing zone.

7.4 Presence of Concerned Representatives During Testing

a) Condition monitoring testing activities shall be carried out in the presence of BRPL P&C Engineer and/or Execution Engineer.

b) Adequate manpower deployment shall be ensured during the testing activity, and teams/representatives shall remain available at:

- Cable starting point;
- Termination point;
- Remote/final end point of the cable route.

c) The authorized representative of the cable laying vendor assigned for the respective site shall remain present and available throughout the testing process for coordination and immediate support, if required.

7.5 Coordination and Scheduling of Testing Activities

a) The detailed testing schedule, sequence of activities, and shutdown planning shall be communicated in advance to the concerned cable laying agency/vendor representative.

b) Prior to commencement of testing activities, the site readiness and testing schedule shall be jointly verified and confirmed by:

- Third-Party Testing Agency;
- BRPL P&C/Execution Engineer;
- Concerned Cable Laying Vendor Representative.

c) Any change in testing schedule or testing sequence shall be communicated to all concerned stakeholders sufficiently in advance.

7.6 Submission of Detailed Test Reports

a) The Third-Party Testing Agency shall submit comprehensive condition monitoring test reports for each cable section tested.

b) All recommendations and acceptance criteria shall be clearly mentioned in accordance with applicable IEEE Standards, manufacturer guidelines, and approved BRPL procedures.

7.7 Compliance with Standards and Approved Procedures

All condition monitoring testing activities shall be carried out strictly in accordance with:

- Applicable IEEE Standards;
- Approved BRPL Safety Procedures;
- Permit to Work (PTW) requirements;
- Manufacturer recommendations;
- Approved testing methodology and engineering practices.

Any deviation from the approved testing methodology or safety procedure shall require prior written approval from the concerned BRPL authority.

8. Responsibility for Rectification of Unsatisfactory Cable Test Results:

If the results of the above-mentioned condition monitoring tests and inspections are found to be satisfactory, compliant with the project specifications, applicable standards, approved procedures, and within the permissible limits as specified under the relevant IEEE Standards, the concerned cable system shall be considered acceptable for service. Accordingly, the cable may thereafter be handed over to the Execution Engineer for energization in accordance with the existing Standard Operating Procedure (SOP) and approved commissioning practices.

Upon completion of the power cable laying and associated installation works, the cable laying vendor shall be fully responsible for ensuring the satisfactory performance, integrity, and compliance of the installed cable system.

Accordingly, if the results of any of the condition monitoring tests and inspections listed above are found to be unsatisfactory, non-compliant with the project specifications, applicable standards, approved procedures, or otherwise unacceptable to the Execution Engineer, the cable laying vendor shall be solely responsible for identifying the cause of failure and carrying out all necessary rectification works.

In the event of any abnormality, defect, damage, excessive partial discharge activity, insulation weakness, non-compliance, or unsatisfactory test result observed during the above tests and inspections, the cable laying vendor shall, at its own cost and responsibility, undertake all necessary corrective actions

Further, during any re-testing activities carried out after rectification works, the same third-party testing agency and the same testing equipment/instruments that were originally deployed for the initial testing after cable laying shall be used, unless otherwise specifically approved in writing by the Execution Engineer. The testing methodology, procedures, calibration validity, and acceptance criteria shall also remain consistent with those adopted during the original testing.

SOP/Guidelines on Implementation of new practices in Cable Laying Scheme Works

The vendor shall bear all associated costs arising from such rectification and re-testing activities, including costs related to mobilization, third-party testing agency services, testing equipment, supervision, manpower, consumables, additional inspections, and any consequential works required to achieve compliance with the contract specifications and approved standards. No additional payment, extension of time, or compensation shall be entertained by the BRPL for any rectification or repeat testing arising out of unsatisfactory test results attributable to the cable laying and installation works carried out by the vendor.

The cable laying vendor shall ensure that the complete installed cable system is handed over only after all tests and inspections have been successfully completed and accepted by the Execution Engineer.

Any deviation from the approved testing methodology or safety procedure shall require prior written approval from the concerned BRPL authority.

SOP/Guidelines on Implementation of new practices in Cable Laying Scheme Works

Note:

1. This document has been developed for 11kV U/G Scheme works
2. New guidelines have been mentioned for deviation in case of improper condition monitoring test result, which needs to be incorporated in to the existing cable laying scope doc.
3. This scope is applicable to all type of 11 kV cable laying mechanisms, open cut digging and trench-less method.
4. Designated space/ Location into SAP application will be provided by IT for uploading of the cable laying videos and cable condition monitoring testing results.
5. Condition monitoring test (CMT) results, short videos (30 sec) & images will be uploaded by concerned execution engineer on the SAP platform. These uploaded document etc. will be accessible only to Execution engineer, Quality & OET departments
6. Uploaded videos/images will be reviewed and approved by the Quality department.
7. Condition monitoring test results will be reviewed and approved by the OET department for further processing in SAP.

Documents attached:

1. Annexure A: Cable laying specification for 11 kV cable
2. Annexure B: Detailed testing methodology

Flow chart of the CMT process:

